STANDARD SPECIFICATIONS

for

ROAD, DRAIN & SEWER CONSTRUCTION

Approved & Adopted
January, 2004

By: Manchester Highway Commission
James E. Connolly, Jr., Chairman

Henry Bourgeois, Vice Chairman
William F. Kelley, Clerk

Edward Beleski, Commissioner
Michael Lowry, Commissioner

Frank C. Thomas, P.E., Director of Public Works
Kevin A. Sheppard, P.E., Deputy Director of Public Works

STANDARD SPECIFICATIONS
For
ROAD, DRAIN & SEWER
CONSTRUCTION

TABLE OF CONTENTS

PART I -- DEFINITIONS AND TERMS

Section		Page
	Definitions and Terms	1 - 1
	PART II -- PUBLIC IMPROVEMENTS	
1	**General Requirements**	2 - 1
2	**Roadway Requirements**	2 - 3
	2.1 General	2 - 3
	2.2 Horizontal Alignment	2 - 3
	2.3 Vertical Alignment	2 - 4
	2.4 Cross Sections	2 - 4
	2.5 Driveways	2 - 4
3	**Sewer Requirements**	2 - 6
	3.1 General	2 - 6
	3.2 Horizontal Alignment	2 – 6
	3.3 Vertical Alignment	2 – 6
	3.4 Pump Stations	2 – 7
	3.5 Forcemains	2 – 9
4	**Storm Drainage Requirements**	2 - 11
5	**Street Excavation Requirements**	2 – 14
	5.1 General	2 – 14
	5.2 Encumbrances and Traffic Control	2 – 14
	5.3 Protection of Work Area	2 – 16
	5.4 Proof of Compliance	2 – 16
	5.5 Prosecution of Work	2 – 16

5.6 Street Restoration and Patching Guidelines 2 – 17
5.7 Insurance Requirements 2 – 19
5.8 Emergency Provisions 2 – 19
5.9 Street Excavation General Instructions 2 – 20
5.10 Winter Excavation Permits 2 – 22

6 General Provisions for Construction of Public Improvements 2 – 24

6.1 Scope of Work 2 – 24
6.2 Control of Work 2 – 24

6.2.1 Authority of the Engineer 2 – 24
6.2.2 Plans and Working Drawings 2 – 24
6.2.3 Conformity with Plans and Specifications 2 – 25
6.2.4 Coordination of Specifications, Supplemental Specification, Plans and Special Provisions 2 – 25
6.2.5 Cooperation by Contractor 2 – 26
6.2.6 Cooperation with Utilities 2 – 26
6.2.7 Construction Stakes, Lines and Grades 2 – 26
6.2.8 Authority and Duties of Representatives of the Engineer 2 – 26

INSPECTION SERVICES 2 – 27

6.2.9 Inspection Agreement 2 – 27
6.2.10 Inspection of Work 2 – 27
6.2.11 Removal of Unacceptable and Unauthorized Work 2 – 28
6.2.12 Maintenance During Construction 2 – 28
6.2.13 Failure to Maintain Work 2 – 28
6.2.14 Acceptance 2 – 28

6.3 Control of Material 2 – 29

6.3.1 Source of Supply and Quantity Requirements 2 – 29
6.3.2 Samples, Tests, Cited Specifications 2 – 29
6.3.3 Certificates of Compliance 2 – 30
6.3.4 Plant Inspection 2 – 30
6.3.5 Storage of Materials 2 – 31
6.3.6 Handling Materials 2 – 31
6.3.7 Unacceptable Materials 2 – 31
6.3.8 Disposal of Surplus and Waste Materials 2 – 31

6.4 Legal Relations and Responsibility to Public 2 – 31

6.4.1 Laws to be Observed 2 – 31

6.4.2 Permits, Licenses and Taxes 2 – 32
6.4.3 Restoration of Surfaces Opened by Permit 2 – 32
6.4.4 Sanitary, Health and Safety Provision 2 – 32
6.4.5 Public Convenience and Safety 2 – 33
6.4.6 Railway-Highway Provisions 2 – 33
6.4.7 Construction Over or Adjacent to Navigable Waters 2 – 34
6.4.8 Barricades and Warning Signs 2 – 34
6.4.9 Protection and Restoration of Property and Landscape 2 – 34
6.4.10 Contractor's Responsibility for Work 2 – 35
6.4.11 Contractor's Responsibility for Utility Property and Services 2 – 35
6.4.12 Personal Liability of Public Officials 2 – 36
6.4.13 Environmental Protection 2 – 37

6.5 Prosecution and Progress 2 – 26

6.5.1 Subletting or Work 2 – 37
6.5.2 Prosecution and Progress 2 – 37
6.5.3 Limitation of Operations (Night/ Sunday/Holiday Work) 2 – 37
6.5.4 Character of Workmen 2 – 37
6.5.5 Methods and Equipment 2 – 38

PART III -- CONTRACT GENERAL PROVISIONS

101 Bidding Requirements and Conditions 3 – 1

101.01 Prequalification of Bidders 3 – 1
101.02 Contents of Proposals 3 – 1
101.03 Issuance of Proposals 3 – 1
101.04 Interpretation of Quantities in the Bid Schedule 3 – 2
101.041 Borings 3 – 3
101.05 Examination of Plans, Specifications, Proposal and Site of Work 3 – 3
101.06 Familiarity of Laws 3 – 4
101.07 Preparation of Bids 3 – 4
101.08 Irregular Bids 3 – 5
101.09 Bid Guaranty 3 – 6
101.10 Delivery of Bids 3 – 6
101.11 Withdrawal of Bids 3 – 6
101.12 Combination of Proposals 3 – 6
101.13 Public Opening of Bids 3 – 6
101.14 Disqualification of Bids 3 – 7

102 Award and Execution of Contract 3 – 8

	102.01 Consideration of Bids	3 – 8
	102.02 Award of Contract	3 – 8
	102.03 Cancellation of Award	3 – 8
	102.04 Return of Bid Guaranty	3 – 8
	102.05 Requirement of Contract Bonds	3 – 8
	102.06 Execution and Approval of Contract	3 – 9
	102.07 Failure to Execute Contract	3 – 9
103	**Scope of Work**	3 – 10
	103.01 Intent of Contract	
	103.02 Differing Site Conditions, Suspensions of Work and Significant Changes in the Character of Work	3 – 10
	A. Differing Site Conditions	3 – 10
	B. Suspensions of Work	3 – 10
	C. Significant Changes in Character of Work	3 – 10
	103.03 Extra Work	3 – 12
	103.04 Maintenance of Traffic	3 – 12
	103.05 Rights In and Use of Materials Found on the Project	3 – 12
	103.06 Final Cleaning Up	3 – 13
	103.07 Value Engineering Proposals by Contractor	3 – 13
104	**Control of the Work**	3 – 17
	104.01 Authority of Engineer	3 – 17
	104.02 Plans and Working Drawings	3 – 17
	104.03 Conformity with Plans and Specifications	3 – 18
	104.04 Coordination of Specifications	3 – 18
	104.05 Cooperation by Contractor	3 – 19
	104.06 Cooperation with Utilities	3 – 20
	104.07 Cooperation Between Contractors	3 – 21
	104.08 Construction Stakes, Lines and Grades	3 – 22
	104.09 Authority and Duties of Representatives of the Engineer	3 – 22
	104.10 Inspection of Work	3 – 23
	104.11 Removal of Unacceptable and Unauthorized Work	3 – 23
	104.12 Load and Speed Restrictions	3 – 24
	104.13 Maintenance During Construction	3 – 24
	104.14 Failure to Maintain the Work	3 – 25
	104.15 Acceptance	3 – 25
	104.16 Claims for Adjustment	3 – 26

105 Control of Material 3 – 27

105.01 Source of Supply and Quality Requirements 3 – 27
105.02 Samples, Tests, Cited Specifications 3 – 27
105.03 Certificates of Compliance 3 – 28
105.04 Plant Inspection 3 – 29
105.05 Acceptance of Manufactured Materials 3 – 30
105.06 Storage of Materials 3 – 32
105.07 Handling Materials 3 – 32
105.08 Unacceptable Materials 3 – 32
105.09 Alternates, Substitutions and Contractor's Options 3 – 32
105.10 Disposal of Surplus Waste Materials 3 – 32

106 Legal Relations & Responsibility to the Public 3 – 32

106.01 Laws to be Observed 3 – 32
106.02 Permits, Licenses and Taxes (RSA 80-7) 3 – 39

A. Contractors Taxes 3 – 40
B. Subcontractors Taxes 3 – 41
C. User's Taxes 3 – 41
D. Exemption from Attachment 3 – 41

106.03 Patented Devices, Materials and Processes 3 – 42
106.04 Federal Participation 3 – 42
106.05 Sanitary, Health and Safety Provisions 3 – 42
106.06 Public Convenience and Safety 3 – 44
106.07 Railway-Highway Provisions 3 – 44
106.08 Construction Over or Adjacent to Navigable Waters 3 – 45
106.09 Barricades and Warning Signs 3 – 45
106.10 Use of Explosives 3 – 45
106.11 Protection and Restoration of Property and Landscape 3 – 46
106.12 Responsibility for Damage Claims 3 – 47
106.13 Indemnification and Insurance Requirements 3 – 47
106.14 Use and Occupancy Prior to Acceptance by City 3 – 49
106.15 Contractor's Responsibility for Work 3 – 49
106.16 Contractor's Responsibility for Utility Property and Services 3 – 50
106.17 Personal Liability of Public Officials 3 – 51
106.18 No Waiver of Legal Rights 3 – 51
106.19 Environmental Protection 3 – 51
106.20 No Third Party Beneficiary 3 – 51
106.21 Civil Rights 3 – 51
106.22 Assignment Provision 3 – 51

107 Prosecution and Progress 3 – 54

107.01 Subletting of Contract 3 – 54
107.02 Notice to Proceed 3 – 55
107.03 Prosecution and Progress 3 – 55
107.04 Limitation of Operations 3 – 56
107.05 Character of Employees 3 – 56
107.06 Methods and Equipment 3 – 57
107.07 Determination and Extension of Contract Time 3 – 58
107.08 Failure to Complete on Time 3 – 59
107.09 Default of Contract 3 – 60
107.10 Termination of Contractor's Responsibility 3 – 61
107.11 Guaranty 3 – 61
108.12 Understanding of Parties Regarding Department's Performance 3 – 62

108 Measurement and Payment 3 – 63

108.01 Measurement of Quantities 3 – 63
108.02 Scope of Payment 3 – 65
108.03 Compensation for Altered Quantities 3 – 66
108.04 Extra Work 3 – 66
a. Labor 3 – 66
b. Materials and Specialized Work 3 – 67
c. Equipment 3 – 68
d. Miscellaneous 3 – 70
e. Compensation 3 – 70
f. Statements 3 – 70
108.05 Eliminated Items 3 – 71
108.06 Partial Payments 3 – 71
108.07 Payment for Material on Hand 3 – 72
108.08 Payment for Material Not on Hand 3 – 73
108.08 Semi-final and Final Payments 3 – 73

PART IV -- TECHNICAL SPECIFICATIONS

201 Clearing and Grubbing
202 Removal of Drainage & Sewer Structures
203 Excavation and Embankment
204 Drilling and Blasting Rock
206 Structure Excavation for Pipes and Other Minor Structures

209 Bedding & Backfill
214 Fine Grading
304 Aggregate Base Course
306 Reclaimed Stabilized Base
401 Plant Mix Pavement – General
403 Hot Bituminous Pavement
404 Pavement Restoration
410 Bituminous Surface Treatment
411 Plant Mix Surface Treatment
413 Hot Poured Crack Sealant
417 Cold Planing of Bituminous Surfaces
520 Portland Cement Concrete
534 Water Repellent
544 Reinforcing Steel
570 Stone Masonry
572 Stone Wall
583 Riprap
585 Stone Fill
586 Placing Excavated Rock
593 Geotextiles
601 Sanitary Sewers
602 Sanitary Sewer Manholes
603 Storm Drains
604 Catch Basins, Drop Inlets & Drain Manholes
605 Underdrains
606 Guardrail
607 Fences
608 Sidewalks
609 Curbs
610 Driveways
614 Electrical Conduit
616 Traffic Signals
618 Uniformed Officers and Flaggers
619 Maintenance of Traffic
620 Calcium Chloride
622 Bounds
624 Railroad Protection
628 Sawed Pavement
629 Testing of Materials
632 Reflectorized Pavement Markings
641 Loam
642 Limestone
643 Fertilizer for Grasses
644 Grass Seed

645 Erosion Control
646 Turf Establishment
647 Humus
648 Sod
692 Mobilization
699 Temporary Project Water Pollution Control (Soil Erosion)
702 Bituminous Materials
703 Aggregates
707 Cement Mortar
708 Paints
711 Preformed Retroreflective Pavement Marking Tape
718 Reflective Sheeting

LIST OF FIGURES

Figure No.	
II, 2-1	Typical Roadway Section
II, 2-2	Typical Cul-de-Sac
II, 2-3	Typical Temporary Turnaround
II, 5-1	Patching Guidelines
II, 5-2	Pavement Restoration (Permanent Pavement Repair)
II, 5-3	Pavement Restoration (Temporary Pavement Repair)
II, 5-4	Pavement Restoration (Concrete/Cobblestones)
II, 5-5	Sidewalk/Shoulder Restoration
II, 6-1	Sample Certificate of Compliance
206-1	Unsuitable Excavation
209-1	Excavation Pay Limits for Trenches
601-1	Typical Sewer Trench Detail
601-2	Typical Sewer Connection
601-3	Typical Sewer Service Cleanout
601-4	Inside Drop Connection for PVC Pipe
601-5	Strap Detail for Inside Drop Connection
601-6	Service Chimney for PVC Pipe
602-1	Precast Reinforced Concrete Sanitary Sewer Manhole
602-2	Manhole Joint Sleeve
602-3	Gas Trap
602-4	Grease Trap
603-1	Concrete & Mortar Rubble Masonry Headwall for R.C. Pipe
603-2	Concrete Headwall With 45 degree Wings for R.C. Pipe
603-3	Mortar Rubble Masonry Headwalls With 45 degree Wings for R.C. Pipe
603-4	Concrete Headwalls With 45 degree Wings for R.C. Pipe
603-5	Mortar Rubble Masonry Headwalls With 45 degree Wings for Twin R.C. Pipe (Plate 1 of 2)
603-6	Mortar Rubble Masonry Headwalls With 45 degree Wings for Twin R.C. Pipe (Plate 2 of 2)
603-7	Slope Rounding at Top of Culvert Headwalls
603-8a,b	Protection Grate for Pipe Outlets
604-1	Precast Reinforced Concrete Drain Manhole
604-2	Precast Reinforced Concrete Catch Basin & Drop Inlet
604-3	Standard Grate & Frame Type A
604-4	Standard Grate & Frame Type B
604-5	Standard Type C Top
604-6	Standard Grate & Frame Type E
604-7	Standard Grate & Frame Type F

604-8 Standard Grate & Frame Type B, Alt. 1
604-9 Standard Grate & Frame Type E, Alt. 1
604-10 Rectangular slabs A
604-11 Rectangular slabs B
605-1 Underdrain Headwalls
606-1 Beam Guard Rail – Standard Section
606-2 Beam Guard Rail – Terminal Unit F
606-3 Beam Guard Rail – Bridge Approach Unit
606-4 Beam Guard Rail -- Terminal Unit Type G
606-5 a,b Beam Guard Rail -- Elevation Views
606-6 Beam Guard Rail -- Bolt Slots & Plate Washer
606-7 Beam Guard Rail -- Bolt Details
606-8 Beam Guard Rail -- Section Thru Rail Element
606-9 Beam Guard Rail -- F Unit Anchor Detail
606-10 Beam Guard Rail -- F Unit End Section Detail
606-11 Beam Guard Rail -- F Unit Anchor Setting
606-12 Beam Guard Rail -- End Section Detail
606-13 Beam Guard Rail -- Bridge End Shoe Detail
607-1 Chain Link Fence -- General Details
607-2 Chain Link Fence -- Post Assemblies
607-3 Chain Link Fence -- Post Footing Details
607-4 Chain Link Fence -- Post & Brake Dimensions
607-5 Woven Wire Fence -- General Details
607-6 Woven Wire Fence -- Bracing Details
607-7 Woven Wire Fence -- Wire Fastening Details
607-8 Woven Wire Fence -- Typical Fenced Post Assembly
608-1 Bituminous Sidewalk Detail
608-2 Concrete Sidewalk Detail
608-3 Brick Sidewalk Detail
608-4 Concrete Sidewalk With Brick Accent Detail
608-5 Corner Sidewalk Ramp
608-6 Typical Sidewalk Ramp
609-1 Granite Curb Details
609-2 Granite Slope Curb Details
609-3 Cutting Straight Granite Slope Curb With Radial Joints
609-4 Granite Curb Inlets
609-5 Bituminous Concrete Curb
610-1 Typical Driveway Profile
610-2 Typical Residential Drive
610-3 Bituminous Drive Typical Section
610-4 Concrete Drive Typical Section
614-1 Conduit Details
614-2 Pull Box Frame & Cover
614-3 a,b Detector Box Details

616-1 Concrete Foundation for Standard Traffic Signal Post
616-2 Concrete Foundation for Standard Control Cabinet
616-3 Standard Round Traffic Signal Foundation Plan & Elevation
616-4a Standard Round Traffic Signal Foundation Reinforcing Steel Schedule
616-4b Standard Round Traffic Signal Foundation Typical Quantities Per Base
616-4c Standard Round Traffic Signal Foundation Size Determination Chart
616-4d Standard Round Traffic Signal Foundation General Notes
622-1 Concrete Bound Detail – 1
622-2 Concrete Bound Detail – 2
699-1 Erosion Protection Type A
699-2 Erosion Protection Type B
699-3 Erosion Protection Type C
699-4 Erosion Protection Type D
699-5 Erosion Protection Type E
699-6 Silt Fence Detail
699-7 Sedimentation Control at Catch Basin
699-8 Sediment Control Bag for Catch Basin
699-9 Block and Gravel Sedimentation Control Inlet
699-10 Riprap Swale Detail
699-11 Haybale Check Dam
699-12 Level Spreader Detail

PART IV

TECHNICAL SPECIFICATIONS

PART I

DEFINITIONS AND TERMS

DEFINITIONS AND TERMS

1.1 General. The titles and headings of the Sections, Subsections and Subparts herein are intended for convenience of reference and shall not be considered as having bearing on their interpretation.

When a publication is specified, it refers to the most recent date of issue, including interim publications, prior to the date of receipt of bid for the Project unless the issue as of a specific date or year is provided for.

Whenever the following abbreviations, terms or pronouns are used the Contract, the intent and meaning shall be interpreted as follows:

1.2 Abbreviations:

AAN	American Association of Nurserymen
AAR	Association of American Railroads
AASHTO	American Association of State Highway and Transportation Officials
ACI	American Concrete Institute
AGC	Associated General Contractors of America
AIA	American Institute of Architects
AISC	American Institute of Steel Construction
AISI	American Iron and Steel Institute
ANSI	American National Standards Institute
ARA	American Railway Association
AREA	American Railway Engineering Association
ASCE	American Society of Civil Engineers
ASLA	American Society of Landscape Architects
ASME	American Society of Mechanical Engineers
ASTM	American Society of Testing and Materials
AWPA	American Wood Preservers' Association
AWWA	American Water Works Association
AWS	American Welding Society
CFR	Code of Federal Regulations
FHWA	Federal Highway Administration
FSS	Federal Specifications & Standards, General Services Administration
GSA	General Services Administration
MUTCD	Manual on Uniform Traffic Control Devices
NEMA	National Electrical Manufacturers Association
NHDOT	The State of New Hampshire Department of Transportation
OSHA	Occupational Safety and health Administration
RSA	The New Hampshire Revised Statutes Annotated, 1955 together with all revisions amending same to date of invitation for bids
SAE	Society of Automotive Engineers
SSPC	Steel Structures Painting Council
UL	Underwriter’s Laboratory

1.3 Definitions:

Acceptance. The formal written acceptance by the Director of Public Works of an entire contract or subdivision/site plan improvements which have been completed in all respects in accordance with the Plans and Specifications and any modifications previously approved.

Act of God. An unusual, sudden and unexpected manifestation of the forces of nature, the effect of which could not have been prevented by reasonable human foresight, pains and care.

Actual Cost. The cost actually incurred by the Contractor in the performance of work. Actual costs include labor, materials, actual ownership cost of equipment or invoiced rental rates, and administrative overhead.

Addenda. Contract revisions before the bid opening and before opening proposals to the contract documents, drawings and specifications by additions, deletions, clarifications or corrections.

Advertisement. See Invitation for Bids.

Angle of Crossing. The right or acute angle formed by the intersection of the center line of the upper roadway with a line parallel to the face of the abutment of a bridge or with the center line of a culvert.

Award. The acceptance of a proposal by the Department.

Base Course. The layer or layers specified or selected material of designed thickness placed on a subbase or a subgrade to support a surface course.

Bidder. An individual, partnership, firm, corporation or any combination thereof, or joint venture, submitting a proposal.

Bid Bond. See Proposal Guaranty

Bid (Item Bid). A price submitted by a Bidder for a contract pay item contained in the proposal.

Bid (Total). The total dollar amount of the proposal.

Board. The Board of Mayor and Aldermen.

Bridge. As provided by State law, a structure having a clear span of 10 feet or more measured along the center line of the roadway at the elevation of the bridge seats, spanning a water course or other opening or obstruction, on a public highway.

Calendar Day. A day shown on the calendar.

Cement. Unless otherwise designated, this term will refer to Portland Cement.

Change Order. A written order to the Contractor issued after the effective date of the Contract, signed by the Owner, the Engineer and the Contractor directing the addition, deletion or revision in the Work with or without a change in the contract price or schedule.

City. The City of Manchester, New Hampshire.

Commissioners. The Commissioners of the Department of Highways.

Complete in Place. All work indicated to be performed as part of the contract item except as may be otherwise specified under the Method of Measurement or Basis of Payment.

Completion (Project). Completion of the Project occurs when the Contractor has completed all work required by the Contract and has satisfactorily executed and delivered to the Engineer all documents, certificates and proofs of compliance required by the Contract.

Conduit. Unless the connotation is to the contrary, a tube intended to carry electrical or other utilities.

Construction Zone. As provided in RSA 263:62, a zone designated by The Commissioner of Public Works and Highways in which the provisions as to weight, size and loads as provided in RSA 263:61 have been amended.

Contract. The written agreement between the City and the Contractor setting forth the obligations of the parties thereunder, including but not limited to the performance of the work and the basis of payment.

The contract includes the invitation for bids, proposal, contract form and contract bond, specifications, supplemental notice to proceed, also any change orders and agreements that are required to complete the construction of the work in an acceptable manner, including authorized extensions thereof, all of which constitute one instrument.

Contract Bond. The approved form of security in compliance with RSA 447:16 executed by the Contractor and his Surety or Sureties, guaranteeing complete execution of the contract and all supplemental agreements pertaining thereto and the payment of all legal debts pertaining to the construction of the project.

Contract Time. The time allowed for completion of the contract, including authorized time extensions. See III, 107.07.

Contract Pay Item. A specifically described item for which a price is provided in the proposal.

Contractor. The individual, partnership, firm, corporation or any combination thereof, or joint venture, contracting with the Department for performance of prescribed work. Said person or persons shall be designated as the party of the second part to the contract.

Controlled Access Highway. See Right-of-Way Terms.

Cul-De-Sac. A local street open at one end only and with special provision for turning around.

Culvert. Any structure not classified as a bridge which provides an opening under any roadway.

Day. Unless designated as a working day or unless otherwise indicated, this term will mean a calendar day.

Department. The City of Manchester, New Hampshire, Department of Highways, designated as the party of the first part to the contract.

Differing Site Conditions. Subsurface or latent physical conditions that, (1) differ materially from those indicated in the contract, or (2) differ materially from conditions normally encountered or those conditions generally recognized as inherent in the nature of the work required in the Contract, or (3) are unknown conditions of an unusual nature.

Director. The Public Works Director of the City of Manchester, New Hampshire Department of Highways.

Drive and Entrance. See Right-of-Way Terms.

Easement. A right acquired by public authority to use or control property for a designated purpose.

Engineer. The Director of Public Works either acting directly or through any duly authorized representatives.

Equipment. All machinery and equipment together with the necessary supplies for upkeep and maintenance, and also all tools and apparatus necessary for the proper construction and acceptable completion of the work.

Expression: By or to the Engineer. In order to avoid cumbersome and confusing repetition of expressions in these specifications, it is hereby provided that any and all of the following words or any form of such words, unless clearly indicated otherwise, shall be understood to be followed by the words “by the Engineer” or “to the Engineer”:

Accepted, approved, authorized, condemned, considered or deemed necessary, contemplated, designated, determined, directed, disapproved, established, given, indicated, insufficient, ordered, permitted, rejected, required, reserved, satisfactory, specified, sufficient, suitable, suspended, unacceptable, unsatisfactory.

Extra Work. Work not provided for in the contract as awarded but found by the Engineer to be essential to the satisfactory completion of the contract within its intended scope. Such extra work may be performed at bid prices, agreed prices (Supplementary Agreement), or on a force account basis. See III, 103.03.

Force Account. A basis of payment for the directed performance of work with payment based on the actual cost for labor, materials and equipment with consideration for overhead and profit.

Highway. A public way designated for purposes of vehicular travel or vehicular and pedestrian travel, including the entire area within the right-of-way.

Holidays. In the City of Manchester, legal holidays occur:

January 1st (New Year's Day)
The third Monday in February (President's Day)
Martin Luther King Jr. Civil Right's Day
May 30th (Memorial Day)
July 4th (Independence Day)
The first Monday in September (Labor Day)
The second Monday in October (Columbus Day)
The first Tuesday in November (Election Day)
November 11th (Veteran's Day)
Thanksgiving Day
Christmas Day

Inspector. The Engineer's authorized representative assigned to make observations of the Work.

Invitation for Bids. The advertisement for Proposals for Work or Materials on which bids are requested. The advertisement will indicate the time and place of the opening of Proposals, the type and location of work to be performed, the character and quantity of the material to be furnished and provide information on how to obtain Plans, Specifications and Proposal forms.

Item Numbers and Section Numbers. In these specifications, items are numbered to correspond to sections. Each item shall be constructed in accordance with the specifications contained in the corresponding section. The section numbers are intended for convenience of reference only and shall not be considered as having any bearing on the interpretation thereof.

In case of discrepancy between what the numbers for the items would indicate and the item as written in words, the item written in words shall govern.

Laboratory. Any testing laboratory which may be designated or approved by the Engineer.

Lane. The portion of the traveled way for the movement of a single line of vehicles.

Limited Access Highway. See Right-of-Way terms.

Limits of Construction. An area with established boundaries, identified within the highway right-of-way or construction easements, where the construction is permitted.

Loam. Topsoil suitable for use in seeding and planting. See 641.

Lump Sum. A single amount basis of payment for a complete Contract item as defined in the Specifications. Such payment shall be deemed full compensation for the items of work and all work appurtenant thereto.

Materials. Any substances specified for use in the construction of the project and its appurtenances.

Median. That portion of a divided highway separating the traveled ways for traffic in opposite directions.

Non-Participating Item. As used on the plans for Federal Aid projects, an item in which the cost is not shared by the Federal Government.

Notice to Proceed. Written notice to the Contractor designating the official start time of the contract and directing him to proceed with the Contract work.

Pavement Structure. The combination of base and surface courses placed on a subgrade to support the traffic load and distribute it to the roadbed.

Plans. The contract drawings or reproductions thereof, which show the location, character, dimensions and details of the prescribed work, including all alterations thereof permissible under the contract and authorized by duly approved written orders.

Points of Access. See Right-of-Way terms.

Prequalification Statement. A completed form on which the Contractor has furnished information as to his ability to perform and finance the work. See III,101.01.

Prime Contractor. The Contractor as defined above.

Project. The specific area of the work together with all appurtenances to be constructed under the contract.

Proposal. The offer of a Bidder on the proposal form, to perform the prescribed work at the prices quoted.

Proposal Form. The prescribed form on which the Department requires bids to be submitted. See III,101.02.

Proposal Guaranty. The security furnished with a bid to guarantee that the Bidder will enter into the contract if his bid is accepted.

Responsive Bid. A bid that meets all the requirements of the invitation to bid.

Right-of-Way. A general term denoting land, property or interest therein, usually in a strip acquired for or devoted to transportation purposes.

Right-of-Way Terms:

Limited Access Highway. A highway laid out under the provisions of Chapter 230:45, RSA and to which all ingress or egress from abutting tracts of land is prohibited after completion of the work.

Controlled Access Highway. A highway laid out under the provisions of Chapter 230:45, RSA and to which ingress and egress from abutting tracts of land may be permitted.

Drive and Entrance. The roadway over which a vehicle must operate for ingress and egress from the highway to abutting tracts of land.

Road. See Highway.

Roadbed. A general term denoting the area adjoining the outer edge of the roadway. Extensive areas between the roadways of a divided highway may also be considered roadside.

Roadside Development. Those items necessary for the preservation or replacement of landscape materials and features that may include suitable plantings and other improvement or ground cover to preserve and enhance the appearance and stability of the highway right of way or acquired easements.

Roadway. The portion of a highway within the limits of construction.

Rock. Where used in these specifications, this term shall be construed to mean igneous, metamorphic or sedimentary rock.

Shoulder. The portion of the roadway contiguous with the traveled way for lateral support of base and surface courses and for accommodation of stopped vehicles, for emergency use.

Sidewalk. That portion of the roadway primarily constructed for the use of pedestrians.

Special Attention. Notices calling bidders attention to issues applicable to an individual project.

Special Provisions. Additions and revisions to the standard and supplemental specifications applicable to an individual project.

Specifications. The compilation of Standard Specifications, Supplemental Specifications, Special Provisions, Special Attentions and other requirements for the performance of prescribed work.

Specified Completion Date. The date on which the contract work is specified to be completed.

Standard Specifications. The City of Manchester "Standard Specifications for Road, Sewer and Drain Construction" approved for general application and repetitive use.

Standardized Plant Names. The official Code of Standardized Plant Names of the American Joint Committee on Horticultural Nomenclature.

State. The State of New Hampshire.

Street. See Highway.

Structures. Bridges, conduits, culverts, catch basins, drop inlets, retaining walls, cribbing, manholes, headwalls, end sections, buildings, sewers, service pipes, underdrains and other features which may be encountered in the work and not otherwise classed herein.

Stump. The part of a tree remaining in the earth after the stem or trunk falls or is cut off, a standard tree trunk from which the upper part and the branches have been removed.

Subbase. Layers of specified material thickness placed on a subgrade to support a base course.

Subcontractor. An individual, partnership, firm, corporation or any combination thereof, or joint venture, to whom the Contractor sublets any part of the contract.

Subgrade. The top surface of a roadbed upon which the pavement structure and shoulders are constructed.

Subsidiary and Subsidiary Item. These terms are used to indicate work for which no direct payment will be made. Such work is considered to be incidental to items having contract prices and the bid prices submitted by the Contractor, shall be sufficient to absorb the cost of all work designated as subsidiary or as subsidiary items.

Substructure. All of that part of a bridge below the bearings of simple and continuous spans, skewbacks of arches and tops of footings of rigid frames, together with the backwalls and wingwalls.

Superintendent. The Contractor's authorized representative in responsible charge of the work.

Superstructure. The entire bridge except the substructure.

Supplemental Specifications. Approved additions and revisions to the Standard Specifications.

Supplementary Agreement. A written agreement executed by the Contractor and the Department covering the performance of work not included in the original contract.

Surety. The corporation, partnership or individual other than the Contractor, executing a bond furnished by the Contractor.

Topsoil. The surface layer of soil and sod encountered during construction.

Traffic. The movement of vehicles, pedestrians, animals, and any other conveyance either singly or together through an area of the project or along a route.

Traffic Control Devices. As defined in the MUTCD all signs, signals, markings, and devices placed on, over or adjacent to a street or highway by authority of a public body or official having jurisdiction to regulate, warn, or guide traffic.

Traffic Control Plan. A document which gives the Contractor specific requirements and procedures for controlling traffic during the course of construction.

Traffic Lane. See Lane.

Traffic Manual. The edition of the "Manual on Uniform Traffic Control Devices for Streets and Highways" current on the date of advertisement for bids; which manual is approved by the Federal Highway Administrator as the national standard for all highways open to the public travel.

Traveled Way. The portion of the roadway provided for the movement of vehicles, exclusive of shoulders.

Wear. The percent of wear of aggregate as determined by the AASHTO T 96 (Los Angeles Abrasion Test). The grading shall be Grading A, unless otherwise specified.

Weighmaster. An individual licensed by the Commissioner of Agriculture of New Hampshire as a licensed public weighmaster.

Work. The furnishing of all labor, materials, equipment and incidentals necessary or convenient to the successful completion of the project and the carrying out of the duties and obligations imposed by the contract.

Working Day. A calendar day during which construction operations could proceed for a major part of a shift; normally excludes Saturdays, Sundays and legal holidays recognized by the City, and the period between November 15 to April 1 inclusive.

Working Drawings. Stress sheets, shop drawings, erection plans, falsework plans, framework plans, cofferdam plans, bending diagrams for reinforcing steel, or any other supplementary plans or similar data which the Contractor is required to submit for approval.

PART II

PUBLIC IMPROVEMENTS

SECTION 1 - GENERAL REQUIREMENTS

1 Two (2) sets of plans and specifications for all public improvement work involving roadways, sewers, drains, sidewalks, etc. shall be submitted to the Department of Highways for review. When necessary, two (2) additional sets of plans shall be furnished for submission to the Division of Water Supply & Pollution Control, State of NH Department of Environmental Services (EPA).

2 Plans and specifications relative to public improvements included in site development and subdivision projects shall be submitted to the Department of Highways through the City of Manchester Planning Board. One set of plans and specifications shall also be provided to respective utility companies for their review as necessary.

3 Site development and subdivision plans shall conform to the requirements of the City of Manchester Planning Board.

4 A federal storm water discharge permit must be obtained for all construction activity that disturbs one or more acres of land. This includes the submission of a Notice of Intent (NOI) to the EPA at least seven days before the start of construction, and preparation a Storm Water Pollution Prevention Plan (SWPPP) to be kept onsite. Within 30 days after the project is complete, a Notice of Termination must be filed to the EPA.

5 All plans, specifications and calculations shall be prepared by a professional engineer currently licensed in the State of New Hampshire and shall be appropriately stamped.

6 All public improvement work shall conform to the requirements of the following agencies, where applicable.

- American Association of State Highway & Transportation Officials (AASHTO)
- United States Environmental Protection Agency (EPA)
- State of New Hampshire
  - Department of Transportation
  - Department of Environmental Services
- City of Manchester
  - Department of Highways
  - Planning Board
  - Building Department
  - Water Works

7 All public improvements shall be constructed according to the City of Manchester, Department of Highways Standard Specifications for Road, Sewer and Drain Construction. This shall be noted on the plans.

8 Any change in or variation from the Department of Highways Standard Specifications shall be submitted for review and approval.

9 Construction Plans.

9.1 Construction plans for all public improvements shall contain all horizontal and vertical data necessary for the construction of the roadway, drainage facilities and public utilities.

9.2 Plan sheet size shall be 36 inches by 24 inches with the exception of plans required to be recorded at the Hillsborough County Registry of Deeds. Plans to be recorded shall meet the requirements of the Registry.

9.3 Plan scale shall be either 1"=20' or 1"=40'.

9.4 The horizontal scale of profiles shall correspond to the plan scale. For twenty-scale plans, the vertical scale shall be 1"=2'. For forty-scale plans, the vertical scale shall be 1"=4'.

9.5 Cross section scales shall be 1"=5'.

10 Vertical granite curbing shall be required for all public roadways.

11 All public utilities within the limits of the roadway shall be laid out according to the requirements of the governing utility authority.

12 Upon final acceptance and approval by the City of Manchester Planning Board, two (2) complete sets of site development or subdivision plans shall be furnished to the Department of Highways.

13 Upon final completion and acceptance of the public improvement work, the following shall be submitted:

13.1 One complete set of mylar "as-built" plans prepared by a professional engineer or land surveyor currently licensed in the State of NH, shall be furnished to the Department of Highways. The as-built drawings shall incorporate the following:

12.1.1 Final road grades and elevations
12.1.2 Drainage structures and sewers shown on the plan and profile views.
12.1.3 Edges of pavements and curbing shown on the plan view .
12.1.4 All drainage structures should be shown on the plans with Rim, Invert and Sump information. Rims should be reported to the nearest 0.1’ and Inverts and Sumps to the nearest 0.01’.
12.1.5 All sewer structures identified by station and offset. Inverts shall be shown to the nearest 0.01’ and the Rims to the nearest 0.1’.
12.1.6 The type, size and slopes of all pipes shall be shown.
12.1.7 All structures shall be identified by station and offset.
12.1.8 Tyes to all sewer services shall be provided.
12.1.9 Final location and topography of all treatment swales, detention ponds and other storm water treatment devices shall be shown.
12.1.10 All easements should be clearly shown and defined.
12.1.11 All as-built plans should show both the original design and the final design. For example, if structure location, inverts, roadway grades, etc. have significantly deviated from the original design, the old data shall be crossed or grayed out and new data shall be shown.

12.2 A digital copy of the plans described in 3.5.2 in the current release of "Autocad" (or in a format that can be readily converted to Autocad or in any other equivalent file format that is acceptable to the Department of Highways). The following shall be incorporated:

12.2.1 Digital project files shall be based on N.H. State Plane Coordinate System;

12.2.2 Vertical Datum shall be N.V.D. 1988/1992.

12.2.3 Submissions shall be made via 3.5" disk, compact disk, or by attachment to electronic mail.

SECTION 2 -- ROADWAY REQUIREMENTS

2.1 General

2.1.1 The typical cross section of new roadways shall conform to Fig. II-1.

2.2 Horizontal Alignment

2.1.1 The alignment design shall be consistent with acceptable engineering practices and should be such that the safety of the facility is not compromised. Every effort should be made to meet the requirements for a minimum design speed of 30 m.p.h.

2.1.1.1 Street curves shall be designed with as large a radius as feasible, the minimum radius being 200 feet.

2.1.1.2 Streets shall preferably intersect at a 90 degree angle, but in no case, less than 70 degrees.

2.1.1.3 No more than two proposed streets shall intersect at any one location. Closely spaced offset intersections shall also be avoided.

2.1.1.4 Right-of-way bounds shall be required at all angle points, at the PC and PT points of all curves and at the PC and PT points of right-of-way radii at intersections. Bounds shall conform to Section 622 of the Standard Specifications.

2.1.2 At street intersections, the minimum radius of curb return where curbs are used or the outside edge of pavement where curbs are not used, shall be 25 feet.

2.1.2.1 The minimum right-of-way radii at intersections shall be 18 feet.

2.1.2.2 Sight distance calculations may be required for intersections and changes in alignment on a case-by-case basis. Sight distance analysis shall be as outlined in "A Policy on Geometric Design of Highways and Streets 1984", as amended and published by AASHTO.

2.1.3 Cul-de-sacs shall be of the circular, all-paved type and shall have a minimum curb radius of 50 feet (See Fig. II-2).

2.1.3.1 The maximum length for roadways ending at cul-de-sacs shall be 600 feet, measured from the curb line of the intersecting roadway to the beginning of the pavement transition at the cul-de-sac.

2.1.3.2 Turnarounds other than the specified cul-de-sac will be allowed only as a temporary measure (See Fig. II-3).

2.3 Vertical Alignment

2.3.1 Grades shall be no flatter than 0.75 percent. Desirable maximum grades shall be 6 percent with an absolute maximum of 9 percent.

2.3.1.1 Except for stop conditions at intersections, the minimum K values for vertical curves shall be 40 for sags and 30 for crests. The length of vertical curve and corresponding K value shall be shown on the profile.

2.3.1.2 Existing ground elevations and proposed finished centerline grades, shall be shown on the profile at increments of 50’ or less.

2.3.2 The gradients of intersecting roadways shall be as flat as practical, in order to provide approach platforms for stopped vehicles.

2.3.2.1 Approach platforms shall extend back from the intersecting roadway a minimum of 100 feet. The platforms shall not exceed a grade of 3 percent unless approved by the Director of Public Works.

2.4 Cross Sections

2.4.1 Cross sections shall be required for all new construction and for improvements to existing roadways for projects 500 linear feet or greater in length. The necessity for cross sections for projects less than 500 linear feet in length shall be at the discretion of the Department of Highways.

2.4.1.1 Cross sections shall be required at intervals no greater than 50 feet. Cross sections shall also be required for all intersecting streets and at all proposed driveways. Additional cross sections may be required at the discretion of the Public Works Director.

2.4.1.2 The roadway template shall conform to the City of Manchester, Department of Highways typical roadway section for all subdivision and site improvement projects. (See Fig. II-1) Any change in or variation from the typical roadway section relative to improvements of existing roadways shall be submitted for review and approval.

2.4.1.3 Sufficient cross section data shall be obtained and gutter line grades shown in those areas where the normal cross slope of the roadway changes.

2.5 Driveways

2.5.1 Driveways shall conform to the requirements of the City of Manchester Building Department and the State of New Hampshire Department of Transportation "Policy and Procedure for Driveways and Other Accesses."

2.5.1.1 All driveways shall have a minimum positive pitch of 2 percent for a distance of 7 feet from the gutter line. Driveway treatment for cut and fill conditions, shall be as shown in Fig. 610-1.

2.5.1.2 All driveways shall be paved to the limits of the right-of-way with a minimum of 3” of pavement.

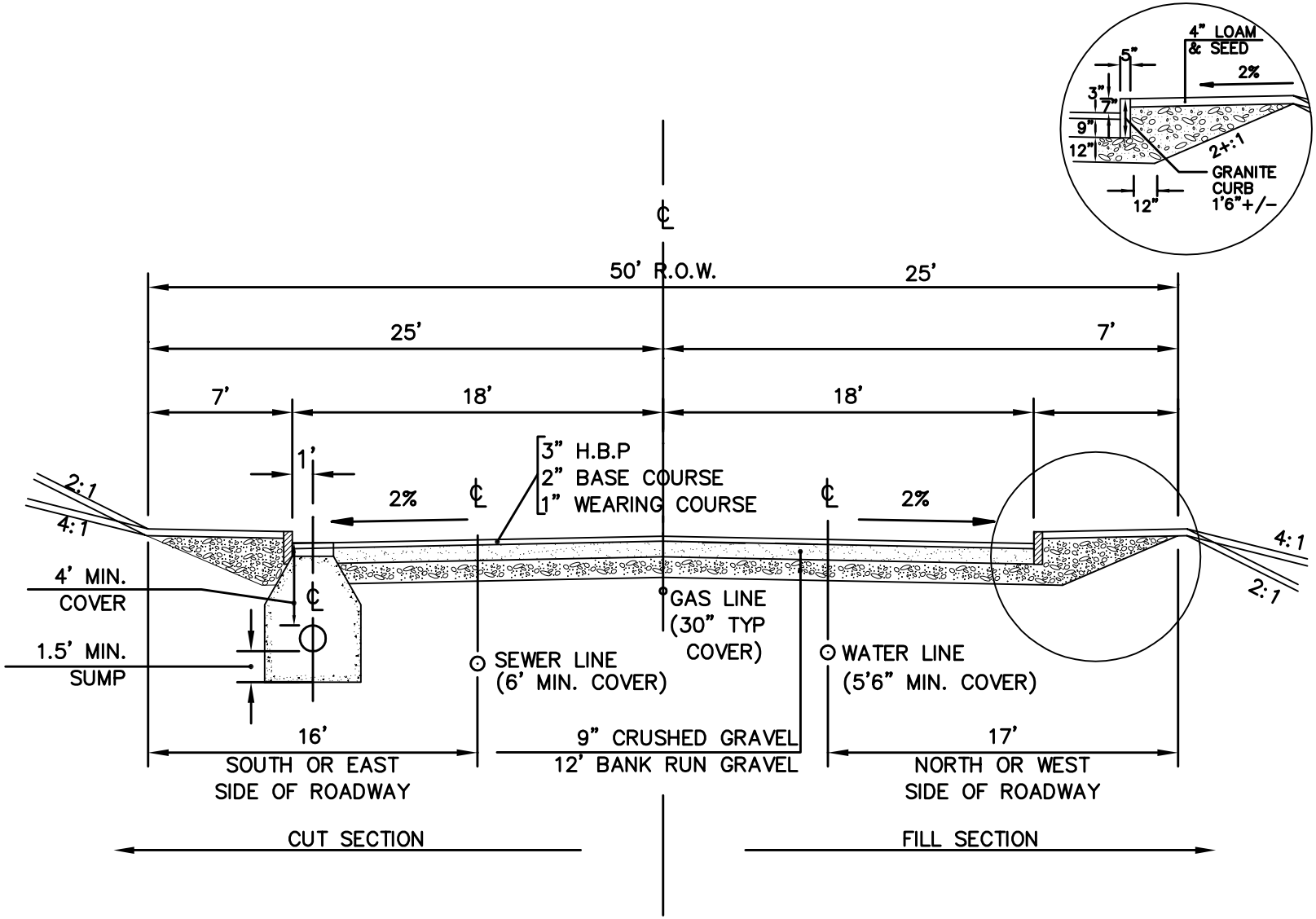

TYPICAL ROADWAY SECTION

S:\DWG\DETAILS\2-1 ROADWAY.DWG

NOT TO SCALE

FIGURE II, 2-1

STATIONING

SOUTH TO NORTH
WEST TO EAST

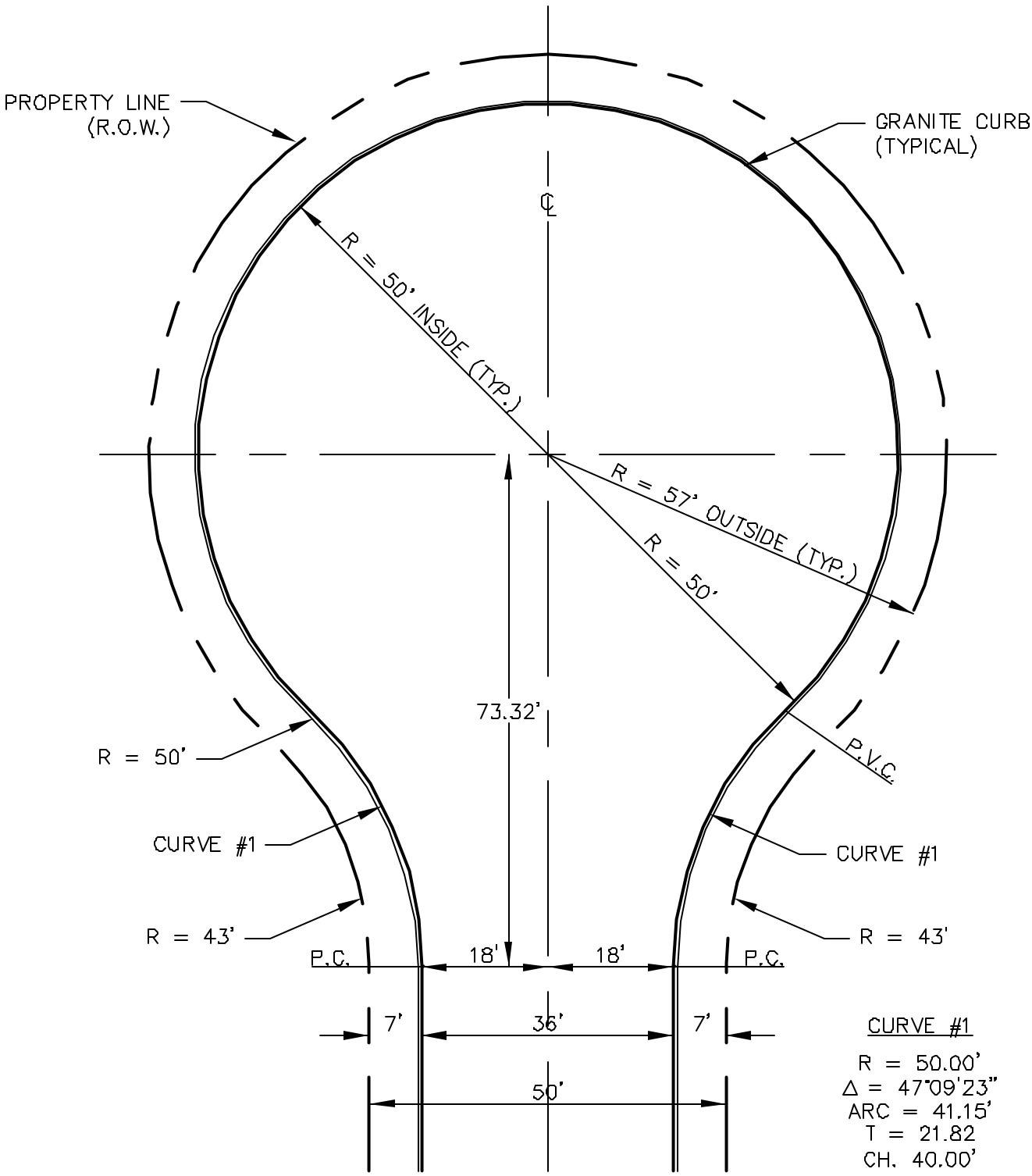

TYPICAL CUL-DE-SAC

S:\DWG\DETAILS\2-2 CULDESAC.DWG

NOT TO SCALE

FIGURE II, 2-2

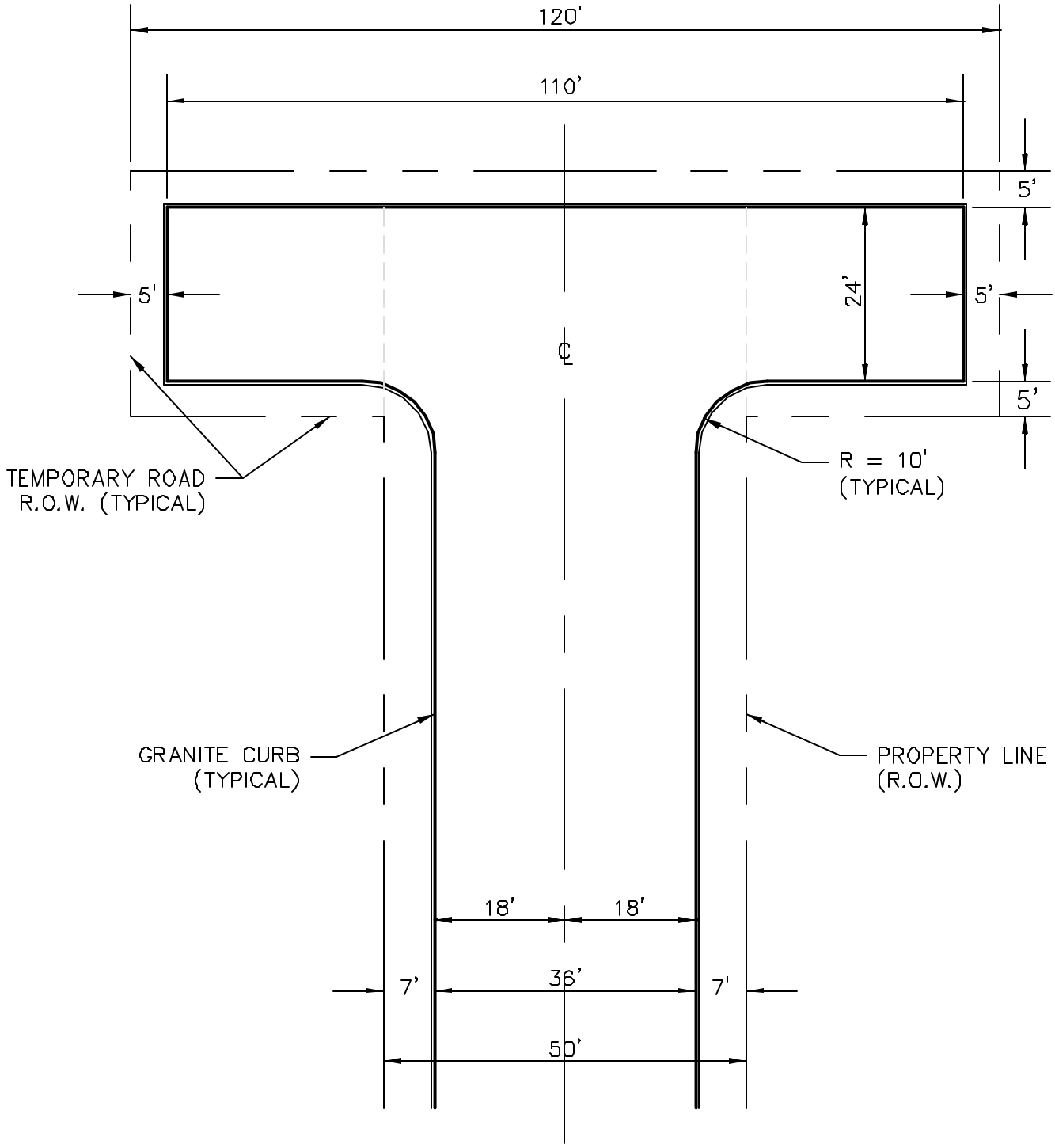

TYPICAL TEMPORARY TURNAROUND

S:\DWG\DETAILS\2-3 HWRHEAD.DWG

NOT TO SCALE
FIGURE II, 2-3

SECTION 3 - SEWER REQUIREMENTS

3.1 General

3.1.1 Design sanitary flow calculations shall be prepared by a professional civil engineer currently licensed in the State of New Hampshire.

3.1.2 All calculated flows shall be in gallons per day.

3.1.3 All sewer systems and appurtenances shall be constructed in accordance with Sections 601 and 602 of the Standard Specifications Technical Specifications.

3.2 Horizontal Alignment

3.2.1 Sanitary sewer lines shall be located on the south or east side of the roadway (See Typical Roadway Section, Fig. 2-1).

3.2.2 During design, sewer lines shall be located at least 10 feet horizontally from any existing or proposed water line. A deviation from the separation requirement will be allowed where necessary to avoid conflict with subsurface structures, utility chambers and building foundations, provided that the sewer is constructed as follows:

3.2.2.1 Sewer pipe shall be class 52 ductile iron; and

3.2.2.2 Joints shall be pressure tested with zero leakage at 25 pound per square inch for gravity sewers, and at 1 ½ times working pressure for force mains.

3.2.3 Sewers crossing streams or located within 10 feet of a stream embankment shall be protected against erosion.

3.2.4 Manholes shall be placed at the end of each sewer line, at all pipe intersections and at all changes in alignment. Desirable spacing of manholes shall be no more than 300 feet.

3.2.4.1 Manhole locations and the horizontal distance or stationing between manholes shall be shown on the plans.

3.2.5 All pipes shall be laid on a direct line between manholes.

3.2.5.1 The size, type of material and class of pipes shall be shown on the plans.

3.3 Vertical Alignment

3.3.1 Sewers shall be of sufficient depth to receive sewage from below basement floors and to preclude freezing.

3.3.1.1 The minimum depth of cover in roadways shall be 6 feet and for cross-country installations, shall be 4 feet.

3.3.1.2 Whenever sewers unavoidably must cross under water mains, the sewer shall be located at such an elevation that the top of the sewer is at least 18 inches below the bottom of the water main. In no case shall the water main pass under the sewer. Whenever sewers must cross water mains, sewer pipe joints shall be located at least 9 feet horizontally from the water main . Joints shall be pressure tested with zero leakage at 25 pounds per square inch for gravity sewers and 1 ½ times working pressure for force mains.

3.3.2 Based on the Manning formula, all sewers shall be designed such that a minimum velocity of 2 feet per second will be maintained when flowing full. Roughness coefficients shall be .009 for PVC pipe and .013 for all other specified pipe materials.

3.3.2.1 Velocities in excess of 10 feet per second shall be avoided whenever possible. Where velocities greater than 10 feet per second may be attained, special provisions shall be made to protect against displacement by erosion and shock.

3.3.2.2 Sewers shall be uniformly graded between manholes and the size, slope, type of material and class of all pipes shall be shown on the profiles. Minimum slopes are noted on Table 2-1 as follows.

TABLE 2 - 1

MINIMUM SEWER SLOPE REQUIREMENT

Sewer Size	Min. Slope (ft/ft)
8"	0.0040
10"	0.0028
12"	0.0022
14"	0.0017
15"	0.0015
16"	0.0014
18"	0.0012
21"	0.0010
24"	0.0008
27"	0.0007
30"	0.0006
36"	0.0005

3.3.3 Manholes shall be located at all changes in grade or pipe size.

3.3.3.1 A drop entry pipe shall be provided for any sewer entering a manhole at an elevation of 24 inches or more above the manhole invert. Where the difference in elevation will be less than 24 inches, the slope of the incoming pipe sewer shall be adjusted to meet the manhole invert elevation (See Figures 601-4 and 601-5).

3.3.3.2 A drop of at least 0.1 feet shall be provided between incoming and outgoing pipes in all manholes.

3.3.3.3 The minimum diameter of manholes shall be 48 inches. For pipes larger than 24 inches in diameter, manhole diameters shall be increased accordingly in order to provide at least a 12 inch shelf on both sides of the invert.

3.3.3.4 Where the pipe size is increased, the invert of the larger pipe shall be sufficiently lowered to maintain the same hydraulic gradient.

3.3.3.5 Profiles shall indicate all manholes. All pipe invert and rim elevations shall be shown.

3.3.3.6 The locations and depth of other existing or proposed underground utilities shall be shown on the plans and profiles in order to avoid conflicts during construction.

3.4 Pump Stations

3.4.1 City owned sewage pump stations are not encouraged by the Department of Highways.

3.4.2 Private Pump Stations shall conform to the requirements of the State of New Hampshire Water Supply and Pollution Control Division, the City of Manchester Code of Ordinances, Chapter 52 – Sewers, the City of Manchester Standard Specifications, and the following guidelines. Detailed shop drawings, catalog cuts and design calculations shall be submitted and approved by the City. All private pump stations shall be inspected by the Highway Department prior to being placed into operation. A complete set of operation and maintenance manuals will be included with every pump station.

3.4.2.1 Industrial or Commercial Sites:

3.4.2.1.1 Any type of sewage pump station conforming to the requirements of section 3.5.2, shall be permitted for use in order to provide service for one building.

3.4.2.1.2 A site with the potential of being subdivided:

3.4.2.1.2.1 The site and service area must be defined and approved.

3.4.2.1.2.2 Design sanitary flows must be approved.

3.4.2.1.2.3 Submersible pumps will not be permitted unless approved in advance by the Public Works Director.

3.4.2.1.2.4 A private service agreement must be set up by the Developer of the project and shall define operation, maintenance, cost and cost sharing responsibilities. This agreement must be reviewed and approved by the City.

3.4.2.1.2.5 No site outside the original service area may be added without approval of the Public Works Director.

3.4.2.2 Residential Apartments and Condominiums:

3.4.2.2.1 The sewage pump station will be designed to provide service for only the apartment or condominium site.

3.4.2.2.2 Design sanitary flows must be approved.

3.4.2.2.3 Submersible pumps will not be permitted unless approved in advance by the Public Works Director.

3.4.2.2.4 Standby power and an alarm system must be provided.

3.4.2.2.5 In the case of condominium developments, the Developer may be required to set up and/or participate in a mechanism to fund the cost of operation, maintenance and equipment replacement to assist the Homeowners Association.

3.4.2.3 Single Family Residential Developments:

3.4.2.3.1 Private sewage pump stations proposed in single family residential developments having public roadways and other public utilities will be discouraged.

3.4.2.3.2 Submersible pumps will not be permitted unless approved in advance by the Public Works Director.

3.4.2.3.3 The sewage pump station shall be of wet well/dry well construction, having approved ventilation and provisions for emergency power as a minimum.

3.4.2.3.4 The Developer will be required to set up and participate in a mechanism to fund the cost of operation, maintenance and equipment replacement for the pump station to assist the Homeowners Association. A copy of the pump station maintenance contract for the Homeowners Association will be placed on file at the Highway Department prior to the pump station being placed into service.

3.4.2.3.5 Suction lift pump stations with emergency power may be permitted, depending on the size of the project.

3.4.2.4 Pumped Building Connection:

3.4.2.4.1 Pumped building connections to the public sewers will only be permitted if they conform to this regulation, the City’s Sewer Use Ordinance or approved in advance by the Public Works Director.

3.4.2.4.2 A building connection from an individual sewage lift system for an existing structure will be permitted, if the connection to the public sewer is within 200 feet of the property line.

3.4.2.4.3 A sewage lift building connection for new construction will only be considered if the requesting party can demonstrate that all gravity sewer options have been exhausted and the connection is within 100 feet of their property line.

3.4.2.4.3.1 Multi-lot sewage lift building connections are discouraged. Use may be approved at the sole discretion of the Public Works Director.

3.4.2.4.4 Individual sewage lift systems that are approved, must have separate effluent lines (force mains). Common force mains for individual building connection may only may be approved at the sole discretion of the Public Works Director.

3.5 Force mains

3.5.1 Force mains shall be sized to yield a cleansing velocity of 3 feet per second or greater at design flow.

3.5.2 Force mains shall be provided with automatic air relief valve(s) at high points to prevent air locking.

3.5.3 Force mains shall enter the gravity sewer system at a point not more than 2 feet above the flow line on the receiving manhole.

3.5.4 Force mains shall be provided with drainage blow-offs, properly valved, at low points. Space shall be available at such locations for handling the displaced waste without danger of pollution or health hazard.

3.5.5 Force mains shall be constructed of ductile iron, polyethylene or PVC material.

3.5.6 Thrust blocks shall be placed at all bends, elbows, tees, and junctions.

3.5.7 Force mains shall be treated as gravity sewers for purposes of foundations bedding and backfill requirements.

SECTION 4 - STORM DRAINAGE REQUIREMENTS

4.1 Design storm runoff calculations shall be prepared by a professional civil engineer currently licensed in the State of New Hampshire and shall be submitted to the Department for review. The calculations shall include:

4.1.1 A topographic plan with contours sufficient to show storm runoff areas tributary to and including the site shall be prepared and submitted to the Department of Highways for review.

4.1.2 A storm drain design based on a 10-year storm for laterals and a 25-year storm for main line pipes and culverts.

4.1.3 Plans that include areas tributary to the site as well as for the site itself.

4.1.4 Design calculations for the proposed systems to control runoff from the site

4.1.5 The design of the drainage system shall include an analysis of any adverse effects on upstream and downstream public and private lands or facilities including but not necessarily limited to the following:

4.1.5.1 Contamination of public and private water supplies, ponds or pools and wells;

4.1.5.2 Increased flows in existing drainage channels;

4.1.5.3 New drainage outlets on public or private property

4.1.5.4 Disruption of existing public or private surface or subsurface drainage systems;

4.1.5.5 Temporary or permanent flooding of public or private property, and

4.1.5.6 Erosion of or deposition on public or private property.

4.1.6 Drainage systems for proposed site developments and subdivisions involving the construction of new roadways shall meet the requirements of Section 6.5 of the Subdivision and Site Plan Regulations of the City of Manchester, dated January 13, 2000.

4.1.7 Temporary and permanent erosion and sediment control measures shall be implemented in accordance with the Stormwater Management and Erosion and Sediment Control Handbook for Urban and Developing Areas in New Hampshire, dated August, 1992 prepared for the New Hampshire Department of Environmental Services.

4.2 Drainage Pipe

4.2.1 All drainage pipe shall be reinforced concrete pipe (RCP) or high density polyethylene (HDP) pipe.

4.2.2 Under roadways, when the cover over the pipe is less than 15 feet, HDP or Class IV RCP pipe may be used. Class III reinforced concrete pipe or HDP pipe shall be

allowed for all other locations. When the cover over the pipe is 15 feet or greater, reinforced concrete pipe shall be used.

4.2.2.1 Minimum cover for all drain pipes shall be 4 feet. Where the minimum cover requirement cannot be met, the strength of the pipe should be checked. In no case will HDP pipe be allowed with less than 4 feet of cover.

4.2.2.2 Minimum size for drain pipes shall be 12 inches.

4.2.2.3 The maximum size for HDP pipe shall be 24 inches

4.2.2.4 All storm drain lines shall be designed such that a minimum velocity of 2.5 feet per second will be maintained when flowing 1/3 full. A Manning roughness coefficient of 0.015 shall be used for reinforced concrete pipe and 0.009 shall be used for HDP pipe. For open ditches, a minimum desirable grade of 0.5 percent shall be employed where possible in order to keep the ditch self-cleaning.

4.2.2.5 Approved headwalls shall be constructed at all pipe outlets and flows directed through stabilized channels. The velocity at all pipe outlets shall be determined and proper precautions taken against predictable downstream erosion and deposition. Protection grates shall be installed on all headwall openings or outlets of 12" diameter or greater. (See Section 606 – Storm Drains)

4.2.2.6 Pipe culverts shall be designed as open flow channels. They shall either be under inlet or outlet control. It is preferred that culverts be located to fit natural channels in line and grade.

4.2.2.7 Where velocities in excess of 10 feet per second may be attained, special provision shall be made to protect against erosion and displacement by shock.

4.3 Drainage Structures

4.3.1 Drainage Structures shall be placed at all pipe intersections and at all changes in alignment, grade and pipe size but, in any case, a storm drain shall not have a manhole or catch basin more than 300 feet apart. The maximum desirable length for open ditches out-letting at culverts or catch basins shall be 400 feet.

4.3.2 Catch basins shall have 2'x2' Type "B" grates and shall be installed with granite curb inlets (where vertical granite curb is being used) and shall have sumps a minimum of 18 inches deep.

4.3.3 At least one catch basin will be located at the bottom of a sag. Depending on roadway design considerations, an additional catch basin on either side could be necessary. The spacing between the three catch basins will be such as to prevent ponding in the roadway.

4.3.4 Surface runoff shall be intercepted upgrade from all roadway intersections. Catch basins shall be located on the tangents preceding the curb returns.

4.3.5 Drainage Structure outlet pipes should be at least 3 inches lower than the lowest inlet pipe. Increases in pipe size through a drainage structure shall be accomplished by keeping the crowns of the pipes at an equal elevation.

4.3.6 All pipes shall be laid on a direct line and shall be uniformly graded between drainage structures.

4.4 Detention Basins

4.4.1 City owned detention and retention basins for public improvements are not encouraged. They may be allowed only after it has been demonstrated that no other alternative exists and as approved by the Department of Highways.

4.4.2 Detention basins shall have a buffer of dense vegetation or fencing to limit access. Vehicular access for maintenance shall be maintained.

4.4.3 Outlets from detention basins shall have a minimum pipe size of 12” diameter. Removable orifice plates to restrict flow are allowed and if used, shall be placed at the invert of the outlet pipe.

SECTION 5 - STREET EXCAVATION REQUIREMENTS

5.1. GENERAL

5.1.1. Street Excavation permits shall be issued by the Department of Highways of the City of Manchester.

5.1.2. Anyone wishing to open or excavate any street, must obtain a permit on a form provided by the Department of Highways.

5.2.Excavation Permit Fees and Requirements. All applications for a permit to excavate in, or open a public right-of-way or public property, shall include a fee for each permit applied for. The fee for an excavation permit, payable in advance, is as follows:

5.2.1. An administrative and inspection charge of $200.00 per permit for all excavations within the public right-of-way or on City property.

5.2.2. A street damage charge of $5.00 per square foot of excavation occurring within the paved portions of the public right-of-way or on City property.

5.2.3. An infrastructure damage charge of $1.50 per square foot of excavation occurring within the greenbelt or unpaved sidewalk areas of the public right-of-way or on unpaved areas of City property.

5.2.4. All street damage and infrastructure damage charges shall be based upon final measurements of patches or disturbances subject to verification of actual excavation impacts by the City's inspection representatives.

5.2.5. If a Contractor disputes a final measurement provided by the City he may request to meet with the inspector on site to re-measure the patch. If the City and Contractor still cannot agree on the patch size, the Contractor may elect to hire at his own cost, a Licensed Land Surveyor to provide the patch size measurement. The City may elect to agree with the survey provided or conduct it's own.

5.2.6. Street excavation permit fees may be annually adjusted by Board of Mayor and Alderman resolution on July 1st (start of fiscal year) and listed on Schedule I of Article 1-5 of the Code of Ordinances.

5.2.7. The fees for the administrative and inspection charge of the permit may be increased if the work results in additional administrative and inspection time required to complete the work. The base administrative and inspection charge includes 2 hours of on-site inspection. Additional charges will be billed and due upon presentation.

5.2.8. The Public Works Director reserves the right to allow alternative means of repair or restoration or other roadway improvements in lieu of the required infrastructure damage charge.

5.2.9. A Late Permit fee of an additional 10% of the street damage and/or infrastructure damage fee, will be charged if any excavation is begun without a Street Excavation Permit (other than those approved as an Emergency Excavation) which is in effect at the time of the excavation.

5.2.10. In the event of an emergency, excavations or closing of City streets due to a utility leak or like situation, the Police Department, Fire Department and Department of Highways Dispatcher shall be notified immediately by telephone. **At the earliest opportunity available**, a representative of the Permitee shall obtain a regular permit at the office of the Department of Highways.

5.2.11. If work is done on a street that is currently under moratorium as described in the Street Restoration and Patching Guidelines the Permittee will be responsible for paying an additional pavement life reduction factor to be billed and due upon presentation This factor will be assessed as follows.

- Street pavement less than 2 years old – three times the street damage charge.
- Street pavement older than 2 years old but less than 5 years old – two times the street damage charge.

5.2.12. Inspection Agreement. The Contractor may be required to obtain an inspection agreement per the requirements of the General Provisions for Construction of Public Improvements, Section 6.2.9, of the **Standard Specifications for Road, Drain and Sewer Construction.**

5.2.13. Work authorized by a permit shall be performed between 7:00 a.m. and 9:00 p.m., Monday through Friday from April 1st through November 15th, unless the permittee obtains written consent from the Public Works Director or his designee to do the work during another time. Such permission shall be granted only in case of an emergency or in the event the work authorized by the permit is to be performed in traffic congested areas. In case of an emergency, the "Emergency Provisions" section of the regulation shall apply.

5.2.14. The permittee shall notify the Department of Highways the day construction has begun.

5.2.15. The location of all utility facilities shall be determined sufficiently ahead of excavation work to avoid damage to those facilities and permit their relocation if necessary. The permittee shall, as specified by New Hampshire Law, RSA 374:51 and 374:55, call **DIG SAFE at (1-888-344-7233)** at least **72 hours prior** to any excavation.

The permittee shall also notify the Manchester Police and Manchester Fire Department, Manchester Transit Authority and Ambulance Services.

5.2.16. The permit shall be kept with the foreman at the place where the work is being performed and shall be produced for examination upon request of any member or officer of the Department of Highways or any police officer of the City of Manchester.

5.2.17. The Public Works Director reserves the right to deny or revoke any permit issued under this regulation at any time.

5.3.ENCUMBRANCES AND TRAFFIC CONTROL

5.3.1. No more than 200 feet measure longitudinally shall be opened in any street at one time, except by special permission of the Department of Highways. No opening or excavation in any street shall extend beyond the centerline of the street before being backfilled and the surface of the street made passable to traffic.

5.3.2. A Street Excavation permit gives the right to encumber a roadway with proper traffic control, as long as a minimum of one lane of traffic (11 feet wide) is provided on the street at all times. Access shall be provided to all properties at night and on weekends and to all places of business at all times.

5.3.3. Any street excavation restricting complete traffic movement must have an **"ENCUMBRANCE PERMIT"** in addition to the Street Excavation permit. This Encumbrance Permit will only be issued with an approved traffic control plan. If a complete street closure is necessary, at least seven (7) working days advance notice is required with confirmation of the proposed closure three (3) working days in advance of the actual street closure. The Public Works Director will review and approve any detours required.

5.3.4. If an emergency necessitates the complete closing of a street, the closing will be governed by the "Emergency Provisions" section of this regulation.

5.3.5. Every permittee will be required to place around openings, excavations, encumbrances or obstructions, such barriers, barricades, lights, warning flags, danger signs and traffic control personnel as may be required by the Department of Highways or the Manchester Police Department to protect the safety of the general public. Adequate artificial lighting devices are required to call attention to and indicate the actual location of obstructions and hazards.

5.3.6. All barricades, warning signs, lights, temporary signals and other protective devices shall conform with the current edition of the **"Manual on Uniform Traffic Control Devices for Street and Highways"** which is approved by the Federal Highway Administrator as the national standard for all highways open to public travel.

5.3.7. Traffic control devices shall be set up prior to the start of construction or maintenance operations and shall remain in place only as long as needed, or required by the Department of Highways. Advertisements, notices and signs other than for traffic control shall not be displayed on or attached to any barricade or fence in any highway.

5.3.8. When the work area encroaches upon a sidewalk, walkway or crosswalk area, protective barriers, together with appropriate warning and guidance devices and signs must be utilized so that the passageway for pedestrians is safe and well defined.

5.4. PROTECTION OF WORK AREA

5.4.1. Street line monuments, survey reference points and permanent survey bench marks, shall not be removed or disturbed, unless specifically permitted in writing by the Department of Highways.

5.4.2. Provisions shall be made to provide for proper drainage during construction and the permittee shall be responsible for all claims for damage or injury that may arise from the obstruction or use of any public sewer or drain in connection with the work conducted under the permit.

5.4.3. Shade trees shall not be cut down, trimmed or otherwise injured. Where it is necessary to cut and remove pavement, curb, sidewalk and/or other surface improvement, the material shall be cut and removed by means of equipment suitable to the type of material to be removed and in a manner which results in a minimum amount of damage to adjacent improvements.

5.4.4. As the work progresses, all streets shall be thoroughly cleaned of all rubbish, excess earth, rock and other debris resulting from such work.

5.4.5. Dust control shall be provided as necessary to prevent a nuisance to abutters and surrounding areas. Dust control shall be by wetting or use of calcium chloride or other approved methods.

5.5. PROOF OF COMPLIANCE:

5.5.1. In general, where compliance to the requirements of these regulations and their intent is in question, the permittee, at his expense, shall provide any and all proof of compliance to the Department of Highways. Acceptable proof shall be by, but not limited to, approved independent laboratory tests, approved independent field tests, shop drawings and certificates of compliance from manufacturers. Specific tests as required by regulations and specifications shall be performed as ordered.

5.6. PAVING POLICY:

5.6.1. After an excavation is commenced, the work shall proceed in a continuous manner with diligence and expedition and shall be completed and the street restored, as nearly as possible to its original condition, so as not to obstruct the public places of travel thereon more than is reasonably necessary.

5.6.2. Trench Projects: Permanent base pavement shall be installed within five (5) days from the date of completion of the work. The final wearing course of the street shall be permanently restored within a period of time not to exceed five (5) days from the date of completion of the project for main streets, and ten (10) days form the date of completion of the project for side streets. On large projects, all trench excavations must be based flush by the end of the work week. It will be the responsibility of the Contractor to take into consideration weather forecasts in planning the work. In the event that these timetables are not met, the Department after notifying the utility will withhold all permits beginning 24 hours after issuing the "late notice".

5.6.3. The permittee shall place and maintain temporary pavement immediately upon backfilling and shall maintain the pavement on a daily basis. Department of Highways inspectors will require temporary "hot-patch" or "cold-patch" dependent upon the location of the opening.

5.6.4. Dual Excavations in the Same Street.

- When main replacements or extensions are made by one or more utilities, the Highway Department may require an overlay of the street. Utilities must submit plans of proposed main extensions to the Department for review, after which a decision will be made. Determination will be made by the Department and will be based upon the number of excavations in the street and/or the percent of the street disturbed.

- If the utilities can coordinate their work and be in the same street within 3 calendar days, no temporary pavement will be required. If the 3 calendar days are not attainable, the first utility to disturb the pavement must place temporary hot mix by the end of the third day. Trenches will be based flush with all structures adjusted to the new grade. The entire street shall then be overlaid.

5.6.5. The Public Works Director, as a condition of the permit, reserves the right to restore the highway or cause the same to be restored under his directions and the permittee shall reimburse the City for any or all liability and expense suffered by reason of such work. If the final restoration is not completed in a prompt manner, department forces will, after notice has been given to the permittee, make final restoration which may be done after their normal working hours (overtime rate). The permittee shall reimburse the City for any liability and expense suffered by reason of such work.

5.6.6. The permit shall be kept with the foreman at the place where the work is being performed and shall be produced for examination upon request of any member or officer of the Department of Highways or any police officer of the City of Manchester.

5.7. STREET RESTORATION AND PATCHING GUIDELINES:

5.7.1. Cuts shall be parallel or perpendicular to the line of the trench. In the case of transverse or diagonal trenching, the pavement shall be sawn to provide a flat diamond shaped patch with a two (2) foot minimum overlap on undisturbed material. It shall be cut at a minimum 1:6 ratio to ensure that only one wheel of a vehicle at a time to strike the patch area (See Fig. 5-1). Within the sawn limits of the final patch, the existing pavement and any temporary material shall be removed and replaced to an equal depth with a minimum of three inches (consisting of two inches of bituminous base pavement and one inch of bituminous wearing course pavement). The pavement shall be laid and compacted in a maximum of two inch thick layers to meet the existing pavement edge exactly. The face of all joints shall be painted with asphalt emulsion.

5.7.2. In cases where multiple excavations are made in a street which would result in the edge of patches being closer than 20 feet, the Department of Highways Inspectors may require a continuous patch.

5.7.3. On surface treated gravel highways, feathering the edges of patches shall be allowed.

5.7.4. Excavations shall be backfilled in layers not to exceed 12 inches and shall be compacted to not less than 95% maximum dry density at optimum moisture content using pneumatic tampers, vibratory compactors or other approved means. Puddling will not be allowed.

5.7.5. The material compacted shall be determined by the standard proctor method in accordance with standard specifications.

5.7.6. If unsuitable for backfill, excavated material shall be replaced with granular backfill gravel as specified in the **"Standard Specifications for Road and Bridge Construction, State of New Hampshire, Department of Public Works and Highways"**, hereinafter referred to as the **"New Hampshire Standard Specifications".**

5.7.7. The minimum depth to any substructure, except manholes, vault entrance tubes, valve casings and catch basins, shall be 24 inches (30 inches desirable) below the surface of the nearest edge of the traveled portion of the street and no excavation shall be less than 20 inches in width to allow for compaction.

5.7.8. Permanent Pavement Patch. Within the paved roadway areas, the 12 inches of gravel sub-base material shall be placed and compacted in two six inch layers, to achieve 95% density. Following the gravel base, nine inches of crushed gravel base shall be placed and compacted to achieve 95% density. The 12 inch gravel layer may be substituted with a nine (9) inch crushed gravel layer. This will provide a total of 18 inches of crushed gravel road base. However, if existing road base is constructed to current city standard (9 inches of crushed gravel and 12 inches of gravel), it shall be replaced with the same (See Fig. 5-2). Both crushed gravel and gravel shall conform to Department of Highways Standard Specifications.

5.7.9. Temporary Pavement Patch. The surface of the street shall be permanently restored within a period of time not to exceed five (5) days from the date of completion of the project. In any event, the permittee shall place and maintain temporary pavement immediately upon backfilling which shall be maintained on a daily basis (See Fig. 5-3). Department of Highways inspectors will require temporary "Hot-Patch" or "Cold-Patch" dependent upon the location of the opening.

5.7.10. Within areas of cement concrete or stone base overlaid with asphalt, the Department of Highways will require the replacement of the cement concrete or stone base with class "A" Portland Cement Concrete, reinforced or non-reinforced, as specified in the New Hampshire Standard Specifications to a depth equal to that removed and then overlaid with hot bituminous pavement as specified above (see Fig. 5-4).

5.7.11. In sidewalk and driveway areas, six inches of crushed gravel base shall be placed and compacted to achieve 95% density. Any asphalt or concrete sidewalk surface shall be restored to depth equal to existing with three inches minimum. In case of longitudinal trenches in a sidewalk area, full width restoration may be required (See Fig. 5-5).

5.7.12. In other areas, the excavation shall be restored to the condition that existed before the excavation or as directed by the Department of Highways inspectors. Any existing grassland shall be restored with four (4) inches of sifted loam which shall be fertilized and seeded (See Fig 5-5).

5.7.13. Number of Permits Issued. The Highway Department will deny permits to those Contractors or utilities with an excessive numbers of unfinished patches. The number of permits issued shall be limited as follows:

5.7.13.1. Spring Start-Up. When paving plants open, permits will be issued a the following rates:

No. of Outstanding Patches	No. of Permits Issued/Week
Greater than 25	0 (Including Emergencies)

25 or Less	10 (Including Emergencies)
10 or Less	Unlimited

5.7.13.2. End of Year. The following paving milestones must be met or additional permits will be denied.

Date	No. of Outstanding Patches
1rst Monday in October	50
3rd Monday in October	40
1rst Monday in November	20
November 15th	0
After November 15th	Issued on a "day to day" basis

The Highway Department will determine whether or not these milestones are met. Decisions on issuing permits **after** Nov. 15th will be on a "day-to-day basis" as weather permits.

5.7.14. Moratorium.

5.7.14.1. After a City street had been overlaid, no excavation permits will be issued for a period of two years unless approval is given by the Director of Public Works or his designee.

5.7.14.2. After a City street has been newly constructed or reconstructed, no excavation permits will be issued for a period of five years unless approval is given by the Director of Public Works or his designee.

5.7.14.3. Protection of Streets - In an effort to protect the City's investment in its infrastructure, excavations in areas under moratorium within the public right-of-way or on City property, are prohibited except as follows:

a. Excavations to remedy a public emergency or a situation that creates an imminent threat to the public safety, health, or welfare.
b. Repair or modification to prevent interruption of essential utility services where no reasonable alternatives are available to avoid excavation in new pavements.
c. Relocation work that is mandated by State or Federal legislation.
d. Utility services for new buildings or parcels without existing utility services where no other reasonable means of providing service exists, as determined by the City Engineer.
e. Excavations within protected streets where the City has scheduled the reconstruction within one year due to the failure of the original pavement.
f. Other situations deemed by the Public Works Director to be in the best interest of the general public.

5.7.14.4. The Highway Department will notify utilities of it's schedule of overlay and reconstruction activities. This notification will allow time for utilities to

perform work as needed prior to the Highway Department's work. If the Department does not notify the utility of their intent to overlay/reconstruct prior to 60 days of work, then excavations may be granted at the discretion of the Public Works Director or his designee.

5.7.14.5. When excavations are made in streets closed by moratorium due to emergency or the decision of the Department of Public Works street restoration will be made utilizing methods dictated by the Department. These methods may include but are not limited to infrared treatment, coldplaning and overlay and/or full width overlay.

5.8. INSURANCE REQUIREMENTS:

5.8.1. The permittee agrees to furnish a continuing surety bond for a period of Thirty (30) months in the amount of five thousand dollars ($5,000). (Except that the Public Works Director may require up to ten (10) times that amount depending upon the volume of the work being performed by the permittee) guaranteeing the fulfillment of the provisions, instructions and regulations prescribed above and later instructions issued by the Department of Highways during the performance of the work and satisfactory maintenance of the disturbed areas for a period of Thirty (30) months following the completion's of the work and the payment of the charges owed the Department of Highways.

The Permitee agrees to furnish a payment bond in the amount stipulated by the Highway Department. The bond amount shall be based upon the anticipated roadway patch size and the extent of any other disturbance to the Right-of-way. Contractors will be encouraged to maintain a single payment bond for the entire construction season of a sufficient amount ($10,000 minimum) as agreed upon by the Highway Department to cover all of the Contractor's projects over the current construction season.

5.8.2. The person, partnership, firm, corporation, etc. who obtains the permit to excavate a city highway, shall be responsible for said excavation for thirty (30) months after all work conducted under the permit has been completed, and may be ordered by the Department of Highways at any time during the thirty (30) month period to improve or replace the work.

5.8.3. The permittee agrees to meet all insurance requirements, terms and conditions of Section 106.13 of the current **Standard Specifications for Road, Drain and Sewer Construction.**

5.9. EMERGENCY PROVISIONS:

5.9.1. Emergency excavations or closing of City streets shall be done by obtaining an emergency permit from the Department of Highways.

5.9.2. If such an emergency exists, the Police Department, Fire Department and Department of Highways Dispatcher, as a minimum, shall be notified immediately by

telephone. **At the earliest opportunity available**, a representative of the permittee shall obtain a regular permit at the office of the Department of Highways.

5.9.3. The Public Works Director reserves the right to waive any of the provisions of this regulation in case of an emergency, and to impose such conditions as he may require as part of an emergency permit.

5.9.4. After an excavation is commenced, the work shall proceed in a continuous manner with diligence and expedition and shall be completed and the street restored, as nearly as possible to its original condition so as not to obstruct the public places or travel thereon more than is reasonable necessary. The surface of the street shall be permanently restored within a period of time not to exceed five (5) days from the date of completion of the project for main streets, and ten (10) days form the date of completion of the project for side streets. In any event, the permittee shall place and maintain temporary pavement immediately upon backfilling and shall be maintain the pavement on a daily basis (See Fig. 5-3). Department of Highways inspectors will require temporary "Hot-Patch" or "Cold-Patch" dependent upon the location of the opening.

5.9.5. Upon completion of the pavement restoration, the Department of Highways shall be immediately notified as to the location and time of completion.

5.10. STREET EXCAVATION GENERAL INSTRUCTIONS:

5.10.1. An Application and Permit form, prepared in accordance with Department procedures, is required for every excavation within the cities right of way and must be accompanied by the required permit fee.

5.10.2. A set of plans showing the work to be performed must accompany each request for a permit.

5.10.3. The original copy of the approved Application and Permit form and an approved set of work and plans (marked "approved") must be kept on the job at all times.

5.10.4. If work for which a permit has been issued does not commence within five (5) days from the date of the permit, the Street Excavation Permit becomes "void". The permit may be extended by the Department of Highways if a request for an extension is made prior to the permit becoming void. Once a permit has become void, it will be considered as if the permit was never issued, but the fee will not be refunded.

5.10.5. Each applicant must obtain from the Department of Highways, a copy of the Specifications and Regulations governing street excavations in Manchester streets.

5.10.6. The Public Works Director is authorized to revoke any permit if he finds that the City of Manchester Street Excavation Ordinance or the Regulations and Specifications are being violated.

5.10.7. Construction plans for major and minor underground installations submitted to the Department of Highways for permits shall contain the following:

5.10.7.1. MAJOR UNDERGROUND INSTALLATIONS - These projects are defined as follows:

- Those involving more than one conduit.
- Those electric conduits four (4) inches and larger.
- Electrical cable system of 34 KV or higher.
- Gas main two (2) inches in diameter or larger.
- Water mains six (6) inches in diameter or larger.
- Sewer mains eight (8) inches in diameter or larger.

5.10.7.1.1 **Plans and Profile Requirements:** Drawing should be 24" x 36" with horizontal scale of one (1) inch = 20 feet and vertical scale of one (1) inch = four (4) feet or two (2) feet, (whichever is best) and provide the following:

- Locations of proposed construction.
- All existing facilities, right-of-ways and property lines.
- All construction details.
- Elevations for the entire length of the profile including:
  - Existing roadway;
  - Proposed installations;
  - Existing facilities.

5.10.7.1.2 Elevation datum shall be USC & GS or Manchester City Base.

5.10.7.1.3 **"As-Built" Drawings:** "As-Built" drawing shall be provided on all major underground installations per the general requirements listed in Part II, Public Improvements of the Standard Specifications.

5.10.7.2. MINOR UNDERGROUND INSTALLATIONS. All proposed underground installations not described above as major installations.

5.10.7.2.1 **Plan Requirements**: Complete set of drawing shall be provided showing:

- Locations of proposed construction.
- All existing facilities that the proposed construction would cross or parallel in public right-of-way.

- Dimensional ties to monument lines in streets and to property lines.
- A scale of one (1) inch = 20 feet is desired.
- Depth of proposed installations by notes on the permit drawings.

5.10.7.2.2 "As-Built" Drawings": "As-Built" drawings, shall be provided per the general requirements listed in Part II, Public Improvements of the Standard Specifications.

5.11. WINTER EXCAVATION PERMITS:

5.11.1. Application Procedure

5.11.1.1. Between November 15th and April 1st - Permits will be issued on a case by case basis for any Street Excavation with the exception of emergencies. Emergency requests must conform to the following:

1) The permit must be signed by the Public Works Director and there must be a plan with each permit request. New work must also be signed by the Public Works Director.

2) The request must be in a letter form, stating:

a) Date of request.
b) Name of Contractor.
c) Name of customer/homeowner, business, and/or other interested parties.
d) Detailed description of project..
e) Reason why it has to be done now.
f) Method of temporary restoration.
g) Who will maintain patch until permanently restored with 24 hour contact number.
h) When will excavation be permanently restored.
i) Company that will effect restoration.

5.10.2. Winter Construction Procedures

The procedure outlined in the Department of Highways Street Excavation General Instructions, shall be followed **except** for the placing of asphaltic pavement.

5.10.2.1. If hot bituminous concrete asphalt is available, three (3) inches of

temporary hot bituminous pavement (1/2" aggregate) shall be used. If hot bituminous concrete asphalt is not available, then, QPR 2,000 high performance cold patch shall be placed over a prepared crushed gravel base.

-OR-

5.10.2.2. Three (3) inches of class "A" (3000 PSI) concrete shall be placed over a prepared crushed gravel base.

a) The concrete shall have a one percent (1%) calcium chloride added to accelerate curing.
b) The concrete placed shall be brought up even with the elevation of the existing asphalt pavement.
c) The surface of the pavement will have a rough broom-type finish placed perpendicular to the flow of traffic.
d) The concrete pavement shall be protected form freezing for a minimum of two (2) days by covering it with polyethylene plastic or hay and polyethylene plastic. The length of protection and curing, may be increased or decreased by the Department of Highways depending on the daily temperature.

5.10.2.3. The following spring when hot bituminous pavement becomes available, the **temporary** patch shall be removed and replaced with pavement as required in the Department of Highways Street Excavation General Instructions.

5.10.2.4. The permittee must maintain the temporary patch until permanent restorations can be performed.

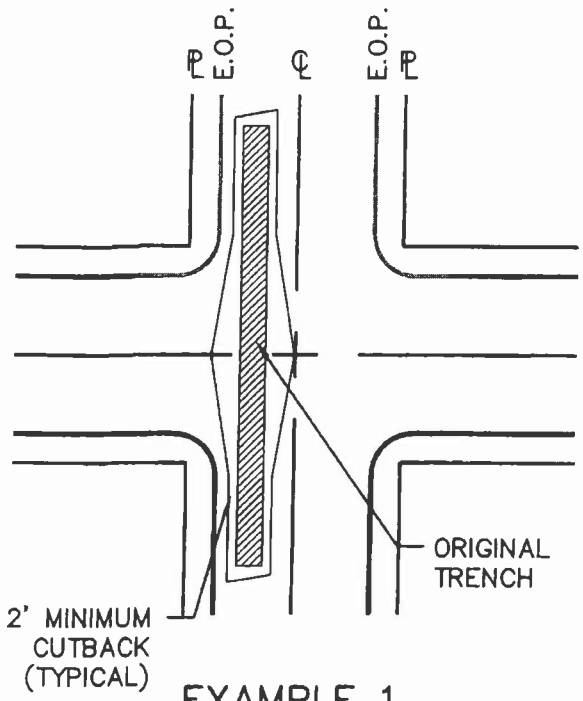

EXAMPLE 1

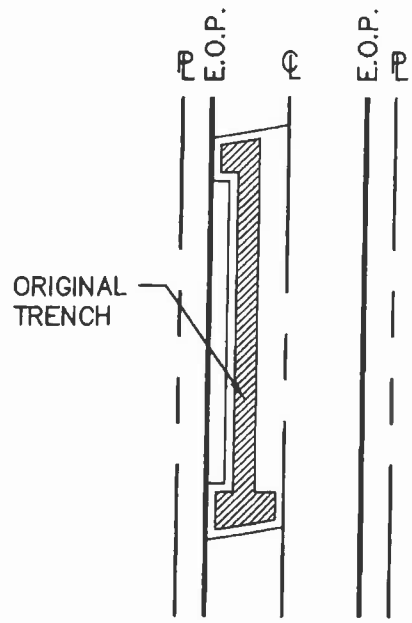

EXAMPLE 3

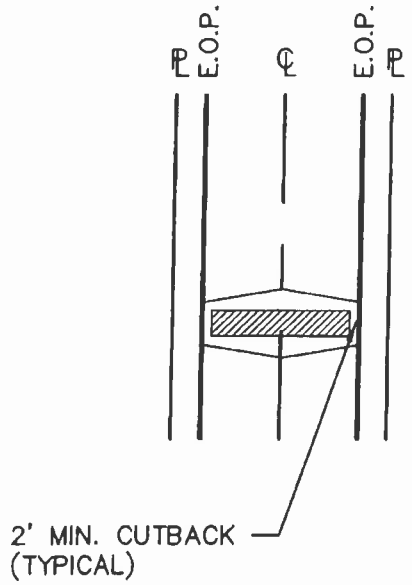

EXAMPLE 2

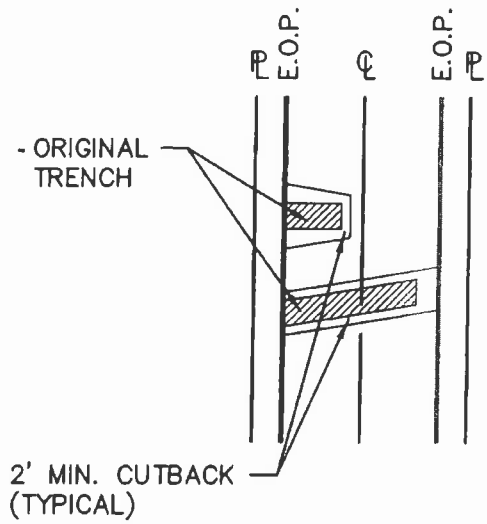

EXAMPLE 4

PATCHING GUIDELINES

NOT TO SCALE

FIGURE 5–1

DIAMOND PATCH CUT AT 1:6 RATIO TO ENSURE THAT ONLY ONE WHEEL OF TRAFFIC CROSSES AT ONCE. IF TRENCH IS ON AN ANGLE DIAMOND CAN BE ELIMINATED AND THE TRENCH CUT AT 1:6.

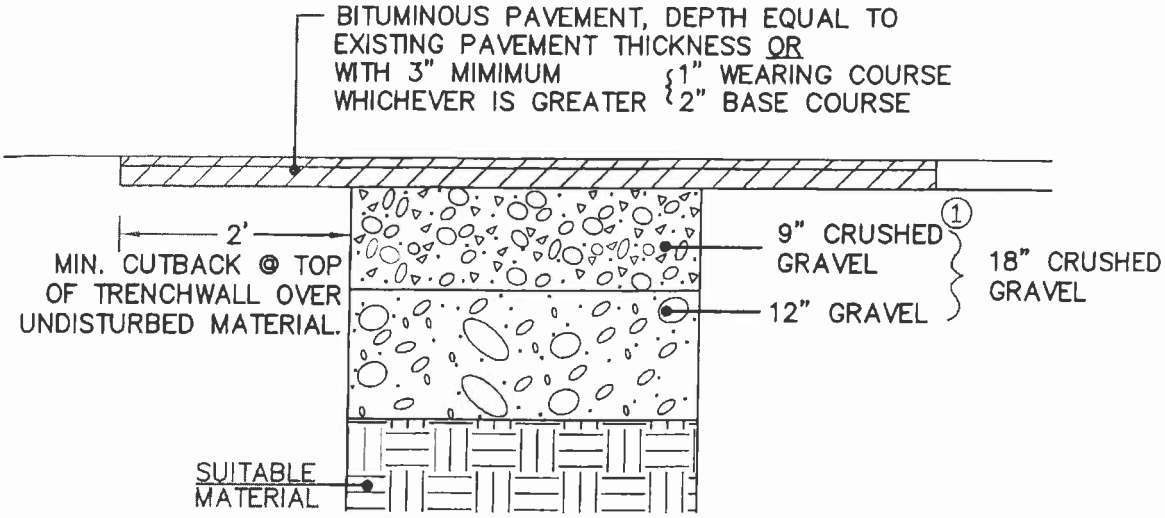

PERMANENT PAVEMENT REPAIR

FIGURE 5–2

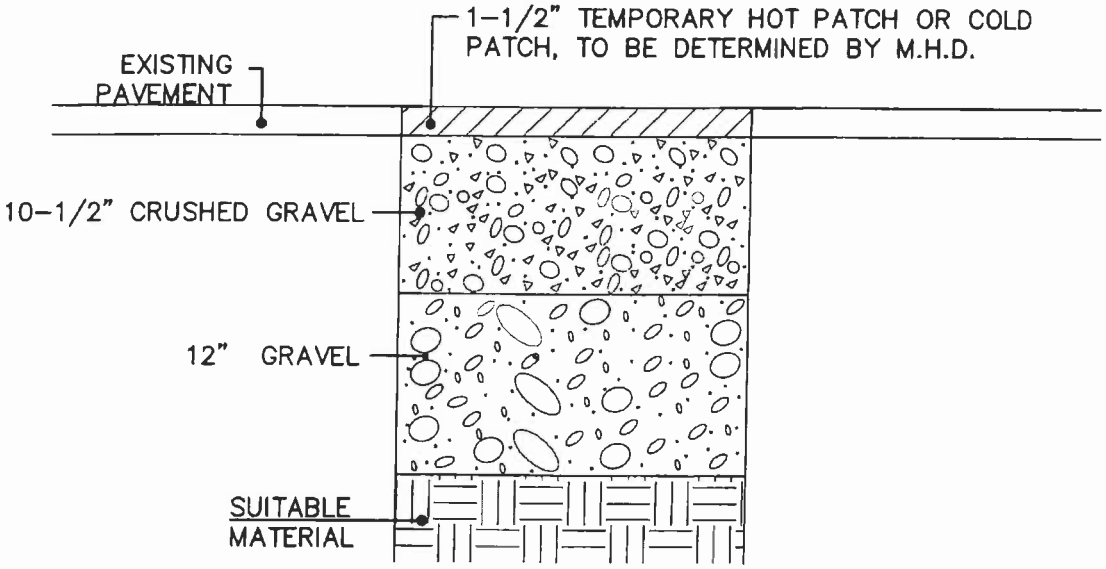

TEMPORARY PAVEMENT REPAIR

FIGURE 5–3

1) MATERIALS SHOULD BE REPLACED IN–KIND, WITH MINIMUM THICKNESS AS SHOWN.
2) PAVEMENT REPAIR IN EXISTING ROADWAYS SHALL CONFORM TO STREET OPENING REQUIREMENTS.
3) ROADWAY CONSTRUCTION SHALL CONFORM TO CITY OF MANCHESTER STANDARD SPECIFICATIONS.

PAVEMENT RESTORATION

(NOT FOR WINTER CONSTRUCTION)

NOT TO SCALE

FIGURE 5–2 AND FIGURE 5–3

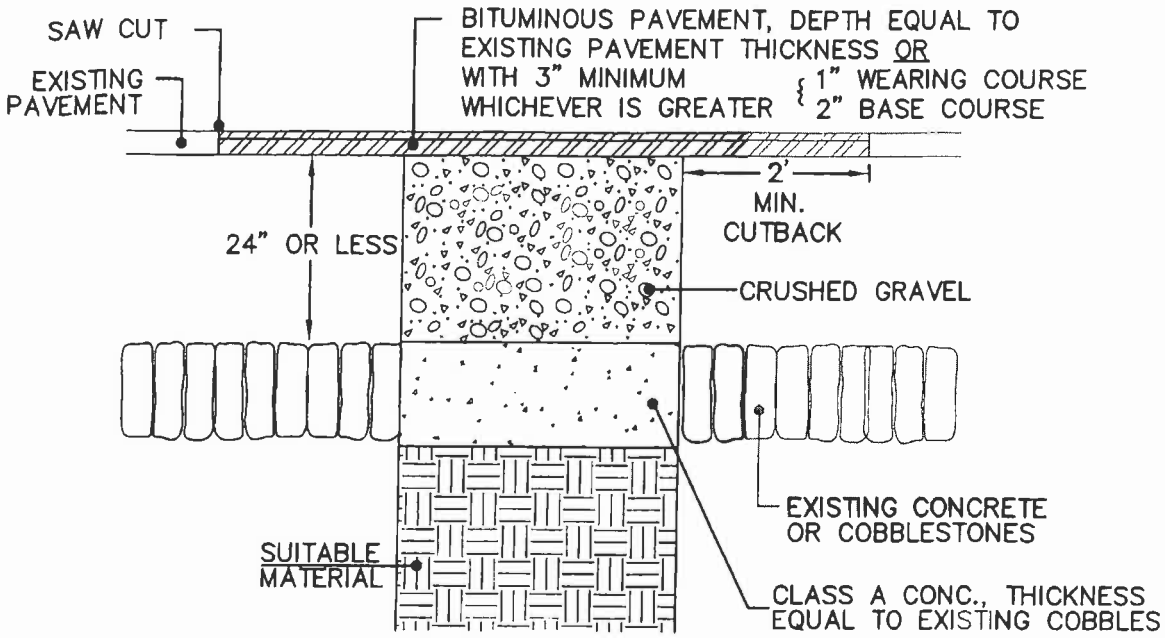

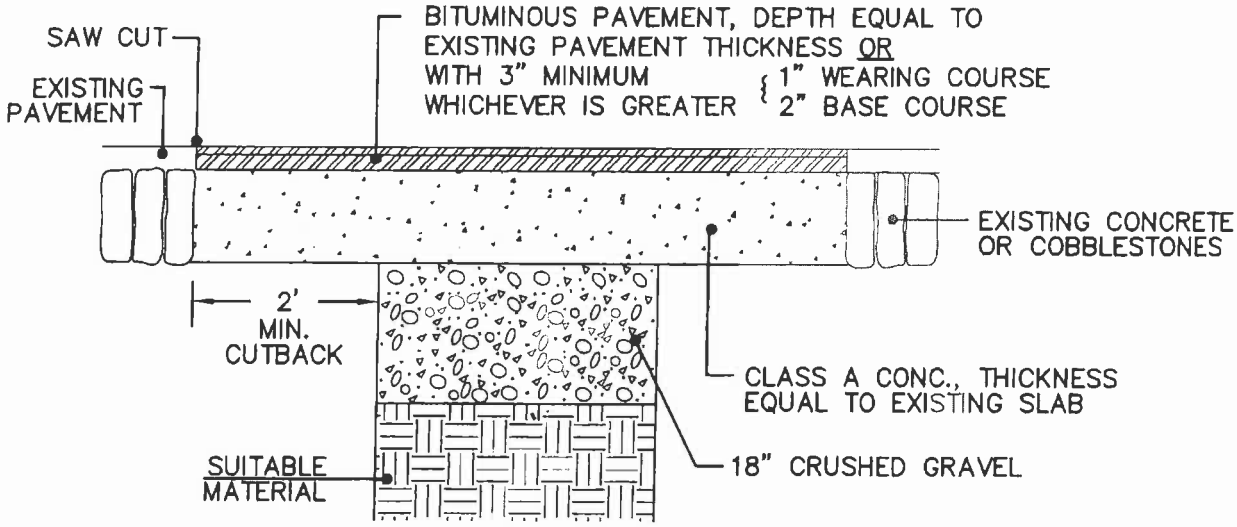

1) MATERIALS SHOULD BE REPLACED IN-KIND, WITH MINIMUM THICKNESS AS SHOWN.
2) PAVEMENT REPAIR IN EXISTING ROADWAYS SHALL CONFORM TO STREET OPENING REQUIREMENTS.
3) ROADWAY CONSTRUCTION SHALL CONFORM TO CITY OF MANCHESTER STANDARD SPECIFICATIONS.

PAVEMENT RESTORATION CONCRETE/COBBLESTONES

NOT TO SCALE

FIGURE 5-4

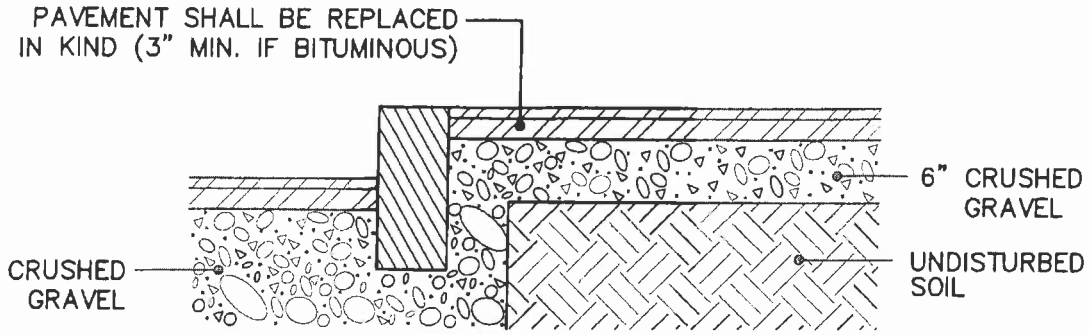

SIDEWALK REPAIR

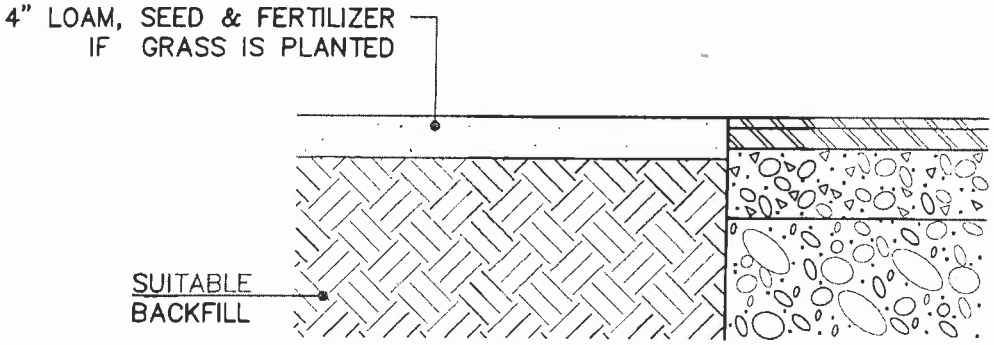

SHOULDER REPAIR

1) MATERIALS SHOULD BE REPLACED IN-KIND, WITH MINIMUM THICKNESS AS SHOWN.
2) PAVEMENT REPAIR IN EXISTING ROADWAYS SHALL CONFORM TO STREET OPENING REQUIREMENTS.
3) ROADWAY CONSTRUCTION SHALL CONFORM TO CITY OF MANCHESTER STANDARD SPECIFICATIONS.

SIDEWALK/SHOULDER RESTORATION

NOT TO SCALE

FIGURE 5-5

SECTION 6 - GENERAL PROVISIONS FOR CONSTRUCTION OF PUBLIC IMPROVEMENTS

6.1 Scope of Work

6.1.1 It shall be the Contractor's responsibility to provide for the construction and completion in every detail of the work described on the plans and in the specifications. The Contractor shall arrange for all underground utility installations and insure that such work conforms with the requirements and specifications of the governing utility authority. All trenching and backfilling relative to these facilities shall conform to the Standard Specification of the City of Manchester, Department of Highways.

6.1.2 Minor alterations to the work presented on the approved plans may be made in the field during construction as specifically approved by the Engineer.

6.1.2.1 Where a major alteration to the proposed work may be necessary, either before or during construction, the Developer shall re-submit plans reflecting these changes to the City of Manchester Planning Board and/or the Department of Highways as described in the General Requirements.

6.1.3 Before acceptance of the work, the Contractor shall remove from within the limits of the right-of-way, all machinery, equipment, surplus materials, falsework, stumps, rubbish, temporary buildings, barricades and signs. All parts of the work shall be left in a neat and presentable condition.

6.2 Control of the Work

6.2.1 Authority of the Engineer. All work shall be done under the supervision of the Engineer and to his satisfaction. The Engineer will decide all questions which may arise as to the quality and acceptability of materials furnished and work performed and as to the rate of progress of the work; all questions which may arise as to the interpretation of the plans and specifications; and all questions as to the acceptable fulfillment of the work on the part of the Contractor. The Engineer will have the authority to suspend the work wholly or in part for such periods as he may deem necessary due to the failure of the Contractor to correct conditions unsafe for the general public, for failure to carry out provisions of the work, for failure to carry out orders, for conditions considered unsuitable for the prosecution of the work, such as extremes of wind, temperatures or precipitation, either existing or forecasted with reasonable certainty to occur and which could be harmful to the scheduled operation; in order to comply with directives of the Division of Air Resources, State of New Hampshire, Department of Environmental Services implementing the emergency episode procedure; or for any other condition or reason deemed to be in the public interest.

6.2.2 Plans and Working Drawings. The approved plans on file in the office of the Department of Highways will show the location, detail and dimensions of the work. These plans shall be supplemented by the Contractor with such additional working and

detail drawings as may be found necessary to adequately control the work and its prosecution. The Contractor's drawings shall be furnished well in advance of the work to allow the Engineer time to review the drawings. When requested, the Contractor shall furnish his basic calculations. Working drawings for steel structures shall consist of shop detail, erection and other working plans showing dimensions, sizes of materials, details and other information necessary for the complete fabrication and erection of the metal work. Working drawings for concrete structures shall consist of such detailed plans as may reasonably be required for the successful prosecution of the work and which are not included in the plans on file in the office of the Department of Highways. These may include plans for falsework, bracing, centering and form work; masonry layout diagrams and diagrams for bent reinforcement. Manufacturer's engineering data for prefabricated material including that for falsework and forms, shall be furnished with each set of drawings. The Contractor shall submit to the Engineer for approval 3 sets of any required preliminary detailed working drawings. Prior to the approval of the drawings, any work done or materials ordered for the structures involved shall be at the Contractor's risk. One set of the drawings will be returned to the Contractor approved or marked with corrections to be made. After approval has been given, the Contractor shall supply the Engineer with 3 sets of the revised detailed working drawings. The Contractor may propose detours not shown on the plans. Should he desire written approval of major detours, he shall submit plans in triplicate which shall show the proposed location, layout and signing.

The Engineer's approval of the Contractor's working drawings will not relieve the Contractor from responsibility for errors in dimensions or for incorrect fabrication processes or from responsibility to complete the work.

6.2.3 Conformity with Plans and Specifications. All work performed and all materials furnished shall be in reasonably close conformity with the lines, grades, cross sections, dimensions and material requirements shown on the plans or indicated in the specifications. If tolerances are specified, deviations beyond the specified limits will be unacceptable. When tolerance limits are not specified and only single dimensions are indicated, such dimensions are to be regarded as nominal dimensions. In the event the Engineer finds that the materials or the finished product in which the materials are used are not within reasonably close conformity with the plans and specifications but that reasonably acceptable work has been produced, he shall then make a determination if the work shall be accepted and remain in place. In this event, the Engineer will document the basis of acceptance as he deems necessary to conform to his determination based on engineering judgement. In the event the Engineer finds that the work performed or that the materials or the finished product in which the materials are used are not in reasonably close conformity with the plans and specifications and have resulted in an inferior or unsatisfactory product, the work or materials shall be removed and replaced or otherwise corrected by the Contractor.

6.2.4 Coordination of Specifications, Supplemental Specifications, Plans and Special Provisions. The specifications, the supplemental specifications, the plans, special provisions and all supplementary documents are essential parts of the proposed

work and a requirement occurring in one is as binding as though occurring in all. They are intended to be complementary and to describe and provide for a complete work. In case of discrepancy, calculated dimensions unless obviously incorrect, will govern over scaled dimensions; supplemental specifications will govern over standard specifications; plans will govern over supplemental specifications and standard specifications; and special provisions will govern over plans, supplemental specifications and standard specifications. The Contractor shall take no advantage of any apparent error or omission in the plans or specifications. In the event the Contractor discovers such an error or omission, he shall immediately notify the Engineer. The Engineer will then make such corrections and interpretations as may be deemed necessary for fulfilling the intent of the plans and specifications.

6.2.5 Cooperation by Contractor. The Contractor shall give the work the constant attention necessary to facilitate the progress thereof and shall cooperate with the Engineer, his inspectors and other Contractors in every way possible. Except as permitted, the Contractor shall have on the work as his agent, a competent English-speaking Superintendent capable of reading and thoroughly understanding the plans and specifications and thoroughly experienced in the type of work being performed. The Superintendent shall have full authority to receive and execute orders or directions of the engineer without delay and to promptly supply such materials, equipment, tools, labor and incidentals as may be required. Such superintendence shall be furnished irrespective of the amount of work sublet.

6.2.6 Cooperation with Utilities. The Contractor shall notify all utility companies, all pipe line owners or other parties affected and endeavor to have all necessary adjustments of the public or private utility fixtures, pipe lines and other appurtenances within or adjacent to the limits of construction made as soon as practicable. Attention is directed to the possible existence of underground facilities not known to the City or in a location different from that which is shown on the plans or in the special provisions. The Contractor shall take steps to ascertain the exact location of all underground facilities prior to doing work that may damage such facilities or interfere with their service. "DIG SAFE" shall be notified at least 72 hours prior to the start of construction.

6.2.7 Construction Stakes, Lines and Grades. The layout of the work shall be done by a competent land surveyor licensed in the State of New Hampshire. The Contractor shall be responsible for furnishing and setting stakes and furnishing data necessary to establish the line and grade of the finished surface, the lines and grades of all waterways, drains, sewers and utilities, and such other points and benchmarks as are necessary to layout the work correctly. The Contractor shall also be held responsible for the preservation of all stakes and marks and establishing such other controls as may be required by the Engineer. All bounds as specified or shown on the plans, shall be set by a competent land surveyor licensed in the State of New Hampshire. All required bounds shall be properly set prior to final acceptance of the work.

6.2.8 Authority and Duties of Representatives of the Engineer. The Engineer may appoint such assistants and representatives as he desires and they shall be granted full

access to the work or to mills and plants in which work is being done for use by the Contractor. They have authority to give directions pertaining to the work or to the safety and convenience of the public, to approve or reject materials, to suspend any work that is being improperly performed, and otherwise represent the Engineer. The Contractor may however, appeal their decision to the Engineer himself, but any work done pending settlement is at the Contractor's own risk. The assistants and representatives are not authorized to act as superintendents or foremen for the Contractor, or to interfere with the management of the work by the Contractor. Any advice which the assistants or representatives of the Engineer may give the Contractor, shall not be construed as binding the Engineer or the Department in any way, nor releasing the Contractor from his responsibility for the work. All transactions between the Contractor and the representatives of the Engineer which are liable to protest, shall be made in writing.

INSPECTION SERVICES

6.2.9 Inspection Agreement. All work involving public improvements shall be inspected by the Department of Highways and the Contractor shall execute an inspection agreement to that effect. The Contractor will be assessed the current hourly rate for inspectors, including time and one-half for overtime. To guarantee payment of the cost involved, the Contractor agrees to provide a surety bond, letter of credit or certified check (payable to the City of Manchester, Department of Highways) in the sum of $5,000.The Contractor shall inform the inspector assigned to the project of his proposed work schedule and shall notify the Engineer at least 2 working days in advance of all work requiring inspection. If an inspector has been requested and his services have been found not to be necessary, the Engineer shall be notified at least 1 full working day prior to the scheduled time of inspection. In those cases where inspection services have been requested and the Engineer has not been notified of a cancellation at least 1 day in advance, a minimum charge of 3 hours shall be assessed. Inspection services will be provided only after all necessary permits have been obtained. Approval of work inspected by the Department of Highways relative to site development and subdivision projects shall not be construed as partial or final acceptance of the projects. Final acceptance will be made by the City of Manchester Planning Board when all the work is satisfactorily completed per the approved plans and specifications.

6.2.10 Inspection of Work. All materials and each part or detail of the work shall be subject to inspection by the Engineer. The Engineer shall be allowed access to all parts of the work and shall be furnished with such information and assistance by the Contractor as is required to make a complete and detailed inspection. No work shall be done at night contrary to local ordinances. No work shall be backfilled or covered without inspection by an authorized Department representative. Any work done or materials used without inspection by an authorized Department representative may be ordered removed and replaced at the Contractor's expense, unless the Department representative failed to inspect after having been given the required notice that the work was to be performed. When any unit of government or political subdivision or any railroad corporation has an interest in the work, its respective representatives shall have the right to inspect the work.

6.2.11 Removal of Unacceptable & Unauthorized Work. All work which does not conform to the requirements of the approved plans and specifications, will be considered unacceptable unless otherwise determined acceptable under the provisions in 5.2.3. Unacceptable work, whether the result of poor workmanship, use of defective materials, damage through carelessness or any other cause found to exist prior to the final acceptance of the work, shall be removed immediately and replaced in an acceptable manner. Work done contrary to the instruction of the Engineer and work done beyond that shown on the approved plans or as given will be considered as unauthorized. Work so done may be ordered removed or replaced at the Contractor's expense.

6.2.12 Maintenance During Construction. The Contractor shall maintain the work during construction and until the project is accepted. This maintenance shall constitute continuous and effective work prosecuted day by day with adequate equipment and forces, to the end that the required work and work area is kept in satisfactory condition at all times. Debris shall not be permitted to accumulate. Dust shall be controlled at all times by wetting, the use of calcium chloride or by other means acceptable to the Engineer in order to prevent a nuisance to abutters. The Contractor shall take every reasonable precaution against spillage of construction materials on existing roadways and bridges. If spillage does occur, the Contractor shall remove such spillage immediately after its occurrence and continue such removal as long as such spillage takes place. Where damage would be caused, the Contractor shall not operate equipment of such weight or so loaded as to cause damage to structures, to the roadways or to any other work. The Contractor shall be responsible for all damage done by his hauling equipment. A special permit will not relieve the Contractor of liability for damage which may result from the moving of material or equipment. During the use of existing streets and roadways, the Contractor shall maintain them in a condition satisfactory to the Engineer and safe for the travelling public. After the hauling operations are completed, he shall repair to the satisfaction of the Engineer all damage incurred by his use of these streets and roadways.

6.2.13 Failure to Maintain the Work. If the Contractor at anytime, fails to comply with the provisions of 5.2.12, the Engineer may direct the Contractor to comply with the required maintenance provisions. If the Contractor fails to remedy unsatisfactory maintenance within the time specified in any order, the Engineer may immediately proceed to maintain the work and the entire cost of this maintenance will be charged to the Contractor.

6.2.14 Acceptance. Acceptance of work inspected by the Department of Highways involved in site development and subdivision projects, shall only be in regard to conformance with the specifications and shall not be construed as partial or final acceptance of the projects. It shall be understood that although the Department of Highways may accept the public improvement work as specified, the Contractor shall be responsible for maintaining such work until final acceptance of the entire project by the City of Manchester Planning Board. Upon due notice from the Contractor of presumptive completion of the work, the Engineer will make an inspection. If all construction provided for and contemplated is found complete to his satisfaction, this inspection shall

constitute the final inspection and the Engineer will make the final acceptance and notify the Contractor and the Planning Board in writing of this acceptance as of the date of the final inspection. If the inspection discloses any unsatisfactory work the Engineer will give the Contractor the necessary instructions for correction of such work, and the Contractor shall immediately comply with and execute such instructions. Upon correction of the work, another inspection will be made which shall constitute the final inspection provided the work has been satisfactorily completed. In such event, the Engineer will make the final acceptance and notify the Contractor and the Planning Board in writing of this acceptance as of the date of final inspection.

6.3 Control Of Material

6.3.1 Source of Supply and Quantity Requirements. The materials used on the work shall meet all quality requirements of the specifications. In order to expedite the inspection and testing of materials, the Contractor shall notify the Engineer of his proposed source of materials prior to delivery. At the option of the Engineer, materials may be approved at the source before delivery is started. If it is found after trial that sources of supply for previously approved materials do not produce specified products, the Contractor shall furnish materials from other sources. No material which, after approval, has any way become unfit for use, shall be used in the work.

6.3.2 Samples, Tests, Cited Specifications. All materials and products proposed to be used in the work shall be inspected, sampled and tested or accepted by a Certificate of Compliance letter from the Contractor as specified below. No material or product shall be incorporated in the work, unless it has been tested and approved or unless provisions have been made to accept the material by certification. Any work in which materials are used without approval, shall be performed at the Contractor's risk and may be considered unacceptable and unauthorized.

Unless otherwise specified, all tests will be made by and at the expense of the Contractor. All samples and all testing and laboratory methods shall be in accordance with the methods prescribed by the available pertinent publications of the AASHTO, ASTM or FSS, unless other standard methods are designated except that the Engineer reserves the right to make use of any information or method of testing, to determine the quality of material or of the work. With respect to all the above specifications, whenever specifications and serial numbers are stipulated, unless specific dates are indicated, the references shall be construed to be the standard, interim or tentative specifications and serial numbers of the pertinent body as amended to date of beginning the work. Samples for testing purposes shall be furnished, at no cost, by the Contractor. All materials being used are subject to inspection, test or rejection at any time.

Random samples of materials or completed work may be taken as checks on the control sampling and testing to determine reasonable compliance with the specifications at any time prior to final acceptance of the work, either while any phase of the work is in progress or after it has been completed. The extent and locations of such random

sampling will be as designated by the Engineer. Copies of all tests will be furnished to the Engineer at his request.

In all AASHTO or ASTM specifications, the section entitled: "Inspection" shall be amended to provide that tests of materials may be made in any recognized laboratory.

All sieves shall conform to the requirements of the AASHTO M 92, and shall be square hole wire cloth sieves.

6.3.3 Certificates of Compliance. Prior to, or at the time of field delivery, if materials are to be used in the work for which there is no prescribed schedule of testing, the Contractor shall submit 3 copies of a Certificate of Compliance for all such manufactured material. (See Fig. 6-1) The certificate shall show the following:

a) Date of Certification
b) Description of material supplied.
c) Name of the Contractor to whom the material is supplied.
d) Project name and numbers to which the material is consigned.
e) Item number and item name.
f) Name of manufacturer and/or supplier.
g) The material meets the requirements of the pertinent specification required.
h) That records will be maintained for the defined three-year period.
i) Signature of a person having legal authority to bind the originator of the certificate.

Certificates of compliance submitted from either the manufacturer, the supplier or the Contractor in the format prescribed will be accepted. All documentation for said certificates must be maintained by the originator of the certificate for a period of not less than three years from the date the work is accepted.

Certificates of compliance covering more than one type of material or item will be acceptable if a listing is made of the item number, name of item, manufacturer and/or supplier for each material covered.

Materials listed in the above certificates may be subject to random sampling and testing by the Engineer. Certified materials which fail to meet the specification requirement will not be accepted.

Supplementing the above certificates upon request, the Engineer shall be furnished with a copy of the manufacturer's certificate of materials showing the physical properties, chemical composition, methods of testing and other relevant data.

6.3.4 Plant Inspection. The Engineer may undertake inspection of materials at the source.

In the event plant inspection is undertaken, the following conditions shall be met:

a) The Engineer shall have cooperation and assistance of the Contractor and the producer with whom he has contracted for materials.
b) The Engineer shall have full entry at all times to such parts of the plant as may concern the manufacture or production of the materials being furnished.
c) If specified, the Contractor shall arrange for an approved building for the use of the Inspector; such building to be located conveniently near the plant, independent of any building being used by the material producer, in which to house and use the equipment necessary to carry on the required tests.
d) Adequate safety measures shall be provided and maintained.

6.3.5 Storage of Materials. Materials shall be so stored as to assure the preservation of their quality and fitness for the work. Stored materials even though approved before storage, may again be inspected prior to their use in the work. Stored materials shall be located so as to facilitate their prompt inspection. Approved portions of the right-of- way may be used for storage purposes and for the placing of the Contractor's plant and equipment, but any additional space required therefore, must be provided by the Contractor at his expense. Private property shall not be used for storage purposes without written permission of the owner or lessee, and if requested, copies of such written permission shall be furnished to the Engineer. All storage sites shall be restored to their original condition by the Contractor at his expense. This shall not apply to the stripping and storing of topsoil, nor to other materials salvaged from the work.

6.3.6 Handling Materials. All materials shall be handled in such a manner as to preserve their quality and fitness for the work.

6.3.7 Unacceptable Materials. All materials not conforming to the requirements of the specifications shall be considered as unacceptable and all such materials will be rejected. They shall be removed immediately from the site of the work as ordered by the Engineer in writing. No rejected material, the defects of which have been allowed to be corrected, shall be used until approval has been given. Should the Contractor fail to remove defective materials within the time indicated in writing, the Engineer shall have authority to cause the materials to be removed at the Contractor's expense.

6.3.8 Disposal of Surplus and Waste Materials. Surplus and waste material shall be disposed of as directed or permitted. It shall be the Contractor's responsibility to secure disposal areas for surplus and waste materials.

6.4 Legal Relations and Responsibility to Public

6.4.1 Laws to be Observed. The Contractor shall keep fully informed of all Federal and State laws, all local laws, ordinances and regulations, and all orders and decrees of bodies or tribunals having any jurisdiction or authority, which in any manner affect those engaged or employed on the work or which in any way affect the conduct of the work. He shall, at all times, observe and comply with all such laws, ordinances, regulations, orders and decrees and shall protect and indemnify the City and its representatives against any

claim or liability arising from or based on the violation of any such law, ordinance, regulation, order or decree, whether by himself or his employees.

6.4.2 Permits, Licenses and Taxes. The Contractor shall procure all permits and licenses, pay all charges, fees and taxes and give all notices necessary and incidental to the due and lawful prosecution of the work.

6.4.3 Restoration of Surfaces Opened by Permit. Any individual, firm or corporation wishing to make an opening in any street or roadway, must secure a permit from the Department of Highways. The Contractor shall allow parties bearing such permits and only those parties, to make openings in streets and roadways. The Contractor shall make in an acceptable manner all necessary repairs due such openings as directed by the Engineer.

Excavation in existing streets and roadways shall conform to the requirements of the City of Manchester, New Hampshire Street Excavation Regulations. The Contractor shall obtain street opening and/or encumbrance permits as necessary prior to excavating in City streets, rights-of-way or on City property.

6.4.4 Sanitary, Health and Safety Provision. The Contractor shall provide and maintain in a neat, sanitary condition such accommodations for the use of its employees and Department representatives as may be necessary to comply with the requirements of the State and local Boards of health, or of other bodies or tribunals having jurisdiction.

Attention is directed to Federal, State and local laws, rules and regulations concerning safety and health standards. The Contractor's attention is directed to the following safety and health standards which apply to all contracts:

> "It is a condition of this contract and shall be made a condition of each subcontract entered into pursuant to this contract, that the Contractor and any Subcontractor shall not require any laborers or mechanics employed in performance of the contract to work in surroundings or under working conditions which are unsanitary, hazardous or dangerous to their health or safety, as determine by the occupational safety and health standards, of the Occupational Safety and Health Administration, United States Department of Labor, which standards include by reference the established Federal Safety and Health Regulations for construction.
>
> "The standards and regulations comprise Part 1910 and Part 1926 respectively of Title 24 of the Code of Federal Regulations and are set forth in the Federal Register. Subsequent to the date of this specification, in case any revisions in the Code of Federal Regulations are published, such revisions will be deemed to supersede the appropriate Part 1910 and Part 1926 and be effective as of the date set forth in the revised regulation."

6.4.5 Public Convenience and Safety. The Contractor shall, at all times, conduct his work as to assure the least possible obstruction to traffic. A minimum of one lane of traffic shall be provided for at all times, except as may be approved by the Engineer. Uniformed officers shall be employed for traffic control as necessary or as directed by the Engineer.

The safety and convenience of the general public and the protection of persons and property shall be provided for by the Contractor. The Contractor shall be responsible for proper and timely notification to local residents prior to any interruptions of their access or services.

Fire hydrants and waterholes for fire protection on or adjacent to the project, shall be kept accessible to the fire apparatus at all times and no obstructions shall be placed within 10 feet of any such facility. No footways, gutters, sewer inlets or portions of roadways adjoining the project under construction shall be obstructed more than is necessary. Existing road surfaces shall be maintained satisfactorily with suitable patching material when ordered.

An encumbrance permit must be obtained prior to closing all or part of a roadway to traffic. In the event that all or part of a roadway is officially closed to traffic during construction, the Contractor shall provide and maintain safe and adequate traffic accommodations for residences and businesses along and adjacent to the roadway so closed.

The Contractor shall provide all safeguards, safety devices and protective equipment and take any other actions necessary to insure the protection of the life and health of the public.

Outside the limits of the project on City streets and State highways, no vehicle used in the construction of the work shall be driven or moved unless such vehicle, when loaded with sand, gravel, rock, borrow, or other particulate substance, is so covered and secured by a close fitting tarpaulin as to prevent any of its load from dropping, sifting, leaking or otherwise escaping. The covering shall be substantial enough and fastened securely enough so that it will not become loose, detached, or in any way, a hazard to other users of the highway.

6.4.6 Railway-Highway Provisions. All work to be performed by the Contractor in construction on the railroad right-of-way shall be performed at such times and in such manner as not to unnecessarily interfere with the movement of trains or traffic upon the track of the railway company. The Contractor shall use all care and precaution in order to avoid accidents, damage or unnecessary delay or interference with the railway company's trains or other property.

The Contractor shall secure from the Railroad, flagging service for the protection of railroad traffic during the progress of work by the Contractor on, over, under or adjacent

to the tracks of the Railroad. The Contractor shall reimburse the Railroad for the expense of such service.

If the Railroad grants the Contractor's request for any temporary crossing or any temporary crossing is ordered by the New Hampshire Public Utilities Commission, the Contractor shall assume the cost of installing, maintaining, removing and protecting such temporary crossing. The type and method of protection of the crossing and the insurance required shall be as determined by the Railroad.

6.4.7 Construction Over or Adjacent to Navigable Waters. All work over, on or adjacent to navigable waters shall be so conducted that free navigation of the waterways will not be interfered with and that the existing navigable depths will not be impaired except as allowed by the Federal agency having jurisdiction.

6.4.8 Barricades and Warning Signs. The Contractor shall provide, erect and maintain all necessary barricades, suitable and sufficient lights, danger signals, signs and other traffic control devices and shall take all necessary precautions for the protection of the work and safety of the public. Roadways closed to traffic, shall be protected by effective barricades. Obstructions shall be illuminated during hours of darkness. Suitable warning signs shall be provided to control and direct traffic in a proper manner.

The Contractor shall erect warning signs in advance of any place on the project where his operation may interfere with traffic and at all intermediate points where the new work crosses or coincides with an existing road.

The Contractor will be held responsible for all damage to the work from traffic, pedestrians, animals or any other cause due to lack of adequate signs or barricades. All barricades, warning signs, lights, temporary signals and other protective devices shall conform with the Manual on Uniform Control Devices.

6.4.9 Protection and Restoration of Property and Landscape. The Contractor shall use every precaution to prevent injury or damage to wires, poles or other property of public utilities; trees, shrubbery, crops and fences along and adjacent to the right-of-way, all underground structures such as pipes and conduits within or without the right-of- way; all pavement markings which may be placed upon the new pavement constructed by him; and all signs authorized or erected by the City or State; and he shall protect and carefully preserve all property marks until an authorized agent has witnessed or otherwise referenced their location.

The Contractor shall be responsible for all damage or injury to property of any nature during the prosecution of the work resulting from any act, omission, neglect or misconduct in his manner or method of executing the work or at any time due to defective work or materials and said responsibility will not be released until the project shall have been completed and accepted.

When or where any direct or indirect damage or injury is done to public or private property by or on account of any act, omission, neglect or misconduct in the execution of the work or in consequence of the nonexecution thereof by the Contractor, he shall restore at his own expense, such property to a condition similar or equal to that existing before such damage or injury was done by repairing, rebuilding or otherwise restoring as may be directed, or he shall make good such damage or injury in an acceptable manner.

The Contractor shall utilize proper tree pruning techniques to repair, all scars made on fruit or ornamental trees by equipment, construction operations or the removal of limbs larger than 1 inch in diameter. The work shall be performed as outlined in the current edition of the American National Standard for Tree Care Operations – Tree, Shrub and Other Woody Plant Maintenance – Standard Practices: ANSI.

If the Contractor fails to repair, rebuild or otherwise restore such property as may be deemed necessary, the Engineer, after 48 hours notice, may proceed to do so and the cost thereof will be charged to the Contractor.

When the Contractor's operations encounter remains of prehistoric man's dwelling sites, artifacts or other archaeological resources, such operations shall be discontinued until a proper investigation can be made.

6.4.10 Contractor's Responsibility for Work. Until final written acceptance of the work by the Engineer, the Contractor shall have the charge and care thereof and shall take every precaution against injury or damage to any part thereof by the action of the elements or from any other cause, whether arising from the execution or from the nonexecution of the work. The Contractor shall rebuild, repair, restore and make good all injuries or damages to any portion of the work occasioned by any of the above causes before final acceptance and shall bear the expense thereof.

Where practicable, spray applications of materials containing fertilizer, asphalt and other injurious substances which cause pitting or which impair the reflective and brightness values of metal, shall precede the installation of susceptible roadside structures such as signs, sign supports and guard rail; otherwise coverings shall be used to protect such structures installed prior to the spray applications.

In case of suspension of the work, the Contractor shall be responsible for the work and shall take such precautions as may be necessary to prevent damage to the work, provide for normal drainage and shall erect any necessary temporary structures, signs or other facilities at his expense. During such period of suspension of work, the Contractor shall properly and continuously maintain, in an acceptable growing condition, all living material in newly established plantings, seedings and soddings and shall take adequate precautions to protect new tree growth and other important vegetative growth against injury.

6.4.11 Contractor's Responsibility for Utility Property and Services. It shall be the Contractor's responsibility to ascertain the existence of any underground

improvements or facilities which may be subject to damage by reason of his operations. The fact that any underground facility is not shown upon the plans, shall not relieve the Contractor of his responsibility under this section.

At points where the Contractor's operations are adjacent to properties of railway, telegraph, telephone and power companies or adjacent to other property, damage to which might result in considerable expense, loss or inconvenience, work shall not be commenced until all arrangements necessary for the protection thereof have been made.

Prior to doing work that might damage underground facilities or interfere with their service, the Contractor shall take steps to have the owners verify the locations shown on the plans and identify such facilities in the field.

He shall cooperate with the owners to arrange that stakes or other markings set by the owners will be set so that maintenance of such points may be possible as long as necessary. The Contractor shall maintain such references and will be responsible for damage to any underground facility, if the owner has properly located it. The Contractor shall maintain access to the installation in order to permit maintenance of services or permit repairs in case of interruptions of service.

The Contractor shall cooperate with the owners of any underground or overhead utility lines in their removal and rearrangement operations in order that these operations may progress in a reasonable manner, that duplication of rearrangement work may be reduced to a minimum and that services rendered by those parties will not be unnecessarily interrupted.

In the event of interruption to utility services as a result of accidental breakage or as a result of being exposed or unsupported, the Contractor shall promptly notify the proper authority and shall cooperate with the said authority in the restoration of service until the service is restored. No work shall be undertaken around fire hydrants until provisions for continued service have been approved by the local fire authority.

Should the Contractor desire to have any rearrangement made in any utility facility or other improvement for his convenience in order to facilitate his construction operations, which rearrangement is in addition to or different from the rearrangements indicated on the plans or in the special provisions, he shall make whatever arrangements are necessary with the owners of such utility or other facility for such rearrangement and bear all expenses in connection therewith.

6.4.12 Personal Liability of Public Officials. In carrying out any of the provisions of these specifications or in exercising any power or authority granted to them by or within the scope of the inspection agreement, there shall be no liability upon the Director, Engineer or their authorized representatives, either personally or as officials of the City, it being understood that in all such matters, they act solely as agents and representatives of the City.

6.4.13 Environmental Protection. The Contractor shall comply with all Federal, State and local laws and regulations, controlling pollution of the environment. He shall take necessary precautions to prevent pollution of streams, lakes, ponds and reservoirs with fuels, oils, bitumens, chemicals or other harmful materials and to prevent pollution of the atmosphere from particulate and gaseous matter.

6.5 Prosecution and Progress

6.5.1 Subletting of Work. No subcontracts shall, in any case, release the Contractor of his liability under the provisions of the inspection agreement.

6.5.2 Prosecution and Progress. Prior to initiating operations on the project, the Contractor shall furnish the Engineer with a "Schedule of Operations" for his approval. The progress schedule may be used to establish major construction operations and to check on the progress of the work. A schedule of Erosion Control Methods may also be required for approval. The Contractor shall provide sufficient materials, equipment and labor to guarantee the completion of the project in accordance with the plans and specifications.

If the Contractor falls significantly behind the submitted schedule, the Contractor shall submit an amended schedule for approval before resuming operations.

6.5.3 Limitation of Operations. The Contractor shall conduct the work at all times in such a manner and in such sequence as will assume the least interference with traffic. He shall have due regard to the location of detours and to the provisions for handling traffic. The Engineer may require the Contractor to finish a section on which work is in progress before work is started on any additional sections if the opening of such section is essential to public convenience.

No work shall be performed at night and on Sundays or legal holidays except in cases of emergency and upon permission of the Engineer. Whenever a holiday is observed on a Friday or a Monday, the Contractor may be required to suspend work for 3 calendar days. Prior to the close of work, the project shall be placed in the best condition possible for the comfort and safety of the travelling public and sound arrangements shall be made for responsible personnel to maintain the project in the above condition throughout the period of suspension.

6.5.4 Character of Workmen. All the Contractor's personnel shall have sufficient skill and experience to perform properly the work assigned to them. Workmen engaged in special work or skilled work shall have sufficient experience in such work and in the operation of the equipment required to perform the work satisfactorily.

Any person employed by the Contractor or by any Subcontractor who, in the opinion of the Engineer, does not perform his work in a proper and skillful manner or is disorderly, shall be removed forthwith by the Contractor or Subcontractor employing such person and shall not be employed again in any portion of the work without approval.

Should the Contractor fail to remove such person or persons as required above or fail to furnish suitable and sufficient personnel for the proper prosecution of the work, the Engineer may suspend the work by written notice until such orders are complied with.

6.5.5 Methods and Equipment. All equipment which is proposed to be used on the work shall be of sufficient size and in such mechanical condition as to meet requirements of the work and to produce a satisfactory quality of work. Equipment used on any portion of the project shall be such as to cause no injury to adjacent property, other roadways or to any stage of the partially completed work.

If any equipment is not maintained in full working order or, as used by Contractor, proves inadequate to obtain results prescribed, the Engineer may order said equipment to be improved or other equipment substituted or added.

When the methods and equipment to be used by the Contractor in accomplishing the construction are not prescribed, the Contractor is free to use any methods or equipment that will accomplish the work in conformity with the requirements of the specifications.

When the specifications call for the use of certain methods and equipment, such methods and equipment shall be used unless others are authorized. If the Contractor desires to use a method or type of equipment other than those specified, he may request authorization from the Engineer to do so. The request shall be in writing and shall include a full description of the methods and equipment proposed to be used and the reasons for making the change. If approval is given, it will be on the condition that the Contractor will be fully responsible for producing construction work in conformity with the plans and specifications. If after trial use of the substituted methods or equipment, the Engineer determines that the work produced does not meet the requirements, the Contractor shall discontinue the use of the substitute method or equipment and shall complete the remaining work with the specified methods and equipment. The Contractor shall remove the deficient work and replace it with work of specified quality or take such corrective action as directed.

Failure on the part of the Contractor to observe the necessary precautions to prevent damage to property or injury to persons shall be sufficient grounds for suspension of the work.

Sample Certificate of Compliance

ORGANIZATION LETTERHEAD

Date _____

WE HEREBY CERTIFY THAT _____

Description, Kind of material or Trade Name

Furnished to _____

Contractor (Prime of Subcontractor)

For Use on _____

Project Name Project Number

Used for Item Number* _____

Name of Item

Manufactured by _____

Supplied by _____

MEETS THE REQUIREMENTS OF THE PERTINENT PROJECT PLANS, SPECIAL PROVISIONS, AND SPECIFICATIONS OF THE MANCHESTER, NH DEPARTMENT OF HIGHWAYS IN ALL RESPECTS. PROCESSING, PRODUCT TESTING AND INSPECTION CONTROL OF RAW MATERIALS ARE IN CONFORMANCE WITH ALL APPLICABLE SPECIFICATION, DRAWINGS AND/OR STANDARDS OF ALL ARTICLES FURNISHED.

All records and documents pertinent to this certificate and not submitted herewith will be maintained available by the undersigned for a period of not less than three years from the date of acceptance of the project.

_____

(Manufactured, Supplier or Contractor)

Signed by _____

(Officer of Organization)

Title _____

* For more than one item, list each Item Number, name of Item, Manufacture and/or Supplier.

FIGURE II, 6-1

PART III

CONTRACT GENERAL PROVISIONS

SECTION 101 -- BIDDING REQUIREMENTS AND CONDITIONS

101.01 Prequalification of Bidders.

In order that the Director may establish the competency of those who propose to become Bidders, all intended Bidders must submit to the Department, pursuant to the Code of Ordinances of the City of Manchester, Chapter 20-1/2-6, on a form prescribed by the Department, a statement containing a complete report of the organizational structure, past record, current and recent projects, equipment owned, leased and/or available to such Bidder. In the event that any intended Bidder fails to submit a prequalification statement as prescribed above, the Director may refuse to supply such intended Bidder with plans, specifications, and proposals for any projects. Prequalification regulations may be obtained by prospective Bidders on application to the Director.

The Director may make such investigations as he deems necessary to determine the ability of the Bidder to perform the work and the Bidder shall furnish to the Director all such information and data for this purpose as the Director may request. The Director reserves the right to reject any bid if the evidence submitted by or investigation of such Bidder fails to satisfy the Director that such Bidder is properly qualified to carry out the obligations of the contract and to complete the work contemplated therein. Conditional bids will not be accepted.

101.02 Contents of Proposals.

Proposals will state the location and description of the contemplated constructions, will show the approximate estimate of the various quantities and kinds of work to be performed or materials to be furnished, and will have a schedule of items for which unit bid prices are invited. The proposal will state the contract time, the amount of the bid guaranty and the date, time and place of the opening of bids. The proposal will include a statement regarding anti-trust activities, collusion and restraint of free competitive bidding. The proposal will also include supplemental specifications, special provisions, and other requirements which are not contained in the standard specifications.

All papers bound with or attached to the proposal are considered a part thereof and must not be detached or altered when the bid is submitted, except for changes authorized in writing by the Department.

The plans, specifications and other documents designated in the proposal will be considered a part of the proposal, whether attached or not.

The prospective Bidder will be required to pay the Department the sum stated in the invitation for bids for each set of the plans.

101.03 Issuance of Proposals.

The Director reserves the right to deny a proposal to a prospective Bidder or

disqualify a bidder for any of the following reasons:

a) Unsatisfactory progress, or doing unsatisfactory work on projects already under contract at the time of requesting proposals, or contracts completed within the past five (5) years.
b) Failure to pay all bills for labor and materials and damages to private property on former contracts, or to satisfactorily settle contracts in force at the time of Request for Proposal.
c) Deceptive or fraudulent statements either on the prequalification form or at any hearing before the Prequalification Committee, or on any Bid Proposal request form.
d) Failure to satisfy judgement relating to any contract.
e) Failure to provide a response to any of the information required by the Prequalification Rules and Regulations.
f) Unsatisfactory evidence that the applicant has the ability and/or capacity and/or skill to perform the contract or provide the service required.
g) Unsatisfactory evidence, based upon either past performance and/or present capability of the applicant, that the applicant can perform the work or provide the service promptly, or within the time specified, without delay or interference.
h) Unsatisfactory assurances of the character, integrity, reputation, judgement, experience or efficiency of the Bidder.
i) Unsatisfactory quality of performance of previous contracts or services.
j) Previous and/or existing non-compliance by the bidder with laws and ordinances relating to the contract or service.
k) Unsatisfactory evidence of the sufficiency of the financial resources and ability of the Bidder to perform the work or provide the service.
l) Unsatisfactory assurances of the quality, availability and adaptability of the supplies or contractual services to the particular use required.
m) Unsatisfactory assurances of the ability of the Bidder to provide future maintenance and service for the use of the contract.

Prospective Bidders who have not been prequalified may be furnished a proposal marked as "Sample Proposal, Not for Bidding Purposes". Such sample proposals will not be accepted by the Director as a valid bid.

101.04 Interpretation of Quantities in the Bid Schedule.

The quantities appearing in the bid schedule are approximate only and are prepared for the comparison of bids. Payment to the Contractor will be made only for the actual quantities of work performed and accepted or materials furnished in accordance with the contract. The scheduled quantities of work to be done and materials to be furnished may each be increased, decreased or eliminated as hereinafter provided and no claim for loss of anticipated profits will be allowed due to such increase or decrease. The Director specifically reserves the right to delete any portion of the work if desirable to keep expenditures within available funds.

101.05 Examination of Plans, Specifications, Proposal and Site of Work.

The Bidder is expected to examine carefully the plans, standard specifications, proposal and site of the proposed work before submitting a bid. The submission of a bid shall be considered prima facie evidence that the Bidder has made such examination and is satisfied as to the conditions to be encountered in performing the work and as to the requirements of the proposal. It will be assumed that the Bidder has also investigated and is satisfied with the sources of supply for all materials.

Whenever subsurface borings or other subsurface information obtained by the Department is available for a Bidder's inspection, it is understood that it has been obtained with reasonable care and recorded in good faith with reasonable interpretations placed on the data in determining the character of materials and conditions to be expected. The information is made available to the Bidder only in order that the Bidder may have access to the identical information available to the Department and is not intended as a substitute for personal investigations, interpretation and judgement of the Bidders.

The information shown on the plans concerning type and location of underground utilities is not guaranteed to be accurate or all inclusive. The Bidder is responsible for making his own determinations as to the type and location of underground utilities as may be necessary to avoid damage thereto.

It is expressly understood and agreed that the Department assumes no responsibility whatsoever in respect to the sufficiency or accuracy of the investigation thus made, the records thereof or of the interpretations set forth therein or made by the Department in its use thereof. There is no warranty or guarantee, either expressed or implied, that the conditions indicated by such investigations or records thereof are representative of those conditions existing throughout such areas or any part thereof or that unlooked for developments may not occur or that materials other than or in proportions different from those indicated, may not be encountered.

The word "rock" or the word "ledge" or the symbol for rock or ledge wherever used on the plans shall be interpreted to mean only that rock may exist at the indicated elevations.

No information derived from an inspection of records of investigations or compilation thereof made by the Department will in any way relieve the Bidder from any risk or from properly fulfilling the terms of the proposal.

No interpretations of the meaning of the plans, specifications or other contract documents will be made to any bidder orally. Every request for such interpretation should be in writing, addressed to the Department of Highways, 227 Maple Street, Manchester, New Hampshire 03103, and to be given consideration must be received at least six (6) days prior to the date fixed for opening bids. Any and all such interpretations and any supplemental instructions will be in the form of written addenda to the specifications

which, if issued, will be mailed by registered mail with "return receipt requested", or by 'fax', or 'e-mail' with a request for acknowledgment of receipt to all prospective bidders (at the respective addresses furnished for such purposes). Adequate notice shall be given to allow contractor sufficient time to adjust his bid (if necessary) before the opening of bids. Failure of any bidder to receive any such addendum or interpretation shall not relieve any bidder from any obligation under his bid as submitted. All addenda so issued shall become part of the contract documents.

101.06 Familiarity with Laws.

The Bidder is assumed to have made himself familiar with all Federal and State laws and all local by-laws, ordinances and regulations which in any manner affect those engaged or employed on the work or affect the materials or equipment used in the work or affect the conduct of the work and no plea of misunderstanding will be considered on account of ignorance thereof. If the Bidder shall discover any provision in the plans or specifications which is in conflict with any such law, by-law, ordinance or regulation, he shall forthwith report it to the Engineer in writing.

101.07 Preparation of Bids.

The Bidder shall submit his bid upon the forms furnished by the Department. The Bidder shall specify a unit price, both in words and figures, for each pay item for which a quantity is given and shall also show the products of the respective unit prices and quantities in the column provide for that purpose and the total amount of the bid obtained by adding the amounts of the several items. All the words and figures shall be in ink or typed. If a unit price or a lump sum bid already entered by the Bidder on the bid schedule is to be altered, it should be crossed out in ink, the new unit price or lump sum bid entered above or below it and initiated by the Bidder, also in ink. In case of discrepancy between the prices written in words and those written in figures, the prices written in words shall govern.

Bidders are expected to submit unit prices in dollars and cents. Unit prices extending more than 2 digits after the decimal will be used in computations and shown in the contract as converted to not more than 2 decimal digits, rounded as necessary, with $0.005 or more shown as the next higher cent.

When an item in the proposal contains a choice to be made by the Bidder, the Bidder shall indicate his choice in accordance with the specifications for that particular item.

The Bidder's bid must be signed in ink by the individual, by one or more members of the partnership, by one or more members or officers of each firm representing a joint venture, by one or more officers of a corporation or by an agent of the Contractor legally qualified and acceptable to the Department. If the bid is made by an individual, his name and post office address must be shown; by a partnership, the name and post office address of each partnership member must be shown; as a joint venture, the name and post office address of each member or officer of the firms represented by the joint venture must be

shown; by a corporation, the name of the corporation and its business address must be shown, together with the name of the state in which it is incorporated and the names, titles and business address of the president, secretary and treasurer.

101.08 Irregular Bids.

Bids will be considered irregular and shall be rejected for, but not necessarily limited to, any of the following reasons:

a) If the bid is on a form other than that furnished by the Department, or if the form is altered or any part thereof is detached or incomplete.

b) If there are unauthorized additions, conditional or alternate bids, or irregularities of any kind which may tend to make the bid incomplete, indefinite or ambiguous as to its meaning.

c) If the Bidder adds any provisions reserving the right to accept or reject an award or to enter into a contract pursuant to an award.

This does not exclude a bid limiting the maximum gross amount of awards acceptable to any one Bidder at one bid letting, provided that any selection of awards will be made by the Department.

d) If the bid does not contain a unit price for each pay item listed except in the case of authorized optional pay items.

e) If the Department determines that any of the unit bid prices are significantly unbalanced to the potential detriment of the Department.

f) If the bid is not properly signed.

g) If the bid is not in ink or typed.

101.09 Bid Guaranty.

No bid will be considered unless accompanied by a bid guaranty in an amount not less than the amount indicated in the proposal made payable to the "City of Manchester, New Hampshire". If a bond is used by the Bidder, it shall be prepared as follows:

a) The bond shall be completed in a form acceptable to the Director, and

b) The bonding company issuing the bond shall be licensed to transact business in the State of New Hampshire.

c) In the event that any irregularities are contained in the bid guaranty, the Bidder will have seven (7) calendar days from the time the bids are opened to correct the irregularities. If such irregularities are not corrected to the satisfaction of the Director, the bid will be rejected.

101.10 Delivery of Bids.

All bids must be submitted in sealed envelopes bearing on the outside the name of the Bidder, his address and the name of the project for which the bid is submitted. When sent by mail, the sealed envelope containing the proposal must be enclosed in another envelope and addressed to the Department at the address shown on the Invitation for Bids. All bids shall be received prior to the time and at the place specified in the invitation for bids. Bids received after the time for opening of bids will be returned to the Bidder unopened.

101.11 Withdrawal of Bids.

A Bidder will be permitted to withdraw his bid unopened after it has been submitted if such a request is received in writing prior to the time specified for opening bids. No bid may be withdrawn for a period of sixty (60) days following the bid opening.

101.12 Combination of Proposals. If the Departments so elects, proposals may be issued for projects in combination or separately so that bids may be submitted either on the combination or on separate units of the combination. The Director reserves the right to make awards on combination bids or separate bids to the best advantage of the City. No combination bids other than those specifically set up in the proposals by the Department, will be considered separate contracts and will be written for each individual project included in the combination.

101.13 Public Opening of Bids.

Bids will be opened and read publicly at the time and place indicated in the invitation for bids. Bidders, their authorized agents, and other interested parties are invited to be present.

101.14 Disqualification of Bidders.

The Bidder shall be disqualified and his bid or bids rejected for, but not necessarily limited to, either of the following reasons:

a) More than one bid for the same work from an individual, firm or corporation under the same or different name.

b) Collusion among Bidders. Participants in collusion will be disqualified as Bidders for any future work of the Department until any such participant shall have been reinstated as a qualified Bidder.

SECTION 102 -- AWARD AND EXECUTION OF CONTRACT

102.01 Consideration of Bids.

After the bids are opened and read, they will be computed on the basis of summation of the products of the quantities shown in the bid schedule by the unit bid prices. The results of such comparisons will be available to the public. In case of a discrepancy between the prices written in words and those written in figures, the prices written in words shall govern. In case of discrepancy between the total shown in the bid and that obtained by adding the products of the quantities of items and the unit bid prices, the latter shall govern. The right is reserved to reject any or all bids if, in the judgement of the Director, the best interests of the City will be promoted thereby.

102.02 Award of Contract.

Within 60 calendar days after the opening of bids, if a contract is to be awarded, the award will be made to the lowest responsible and qualified Bidder whose bid complies with all the requirements prescribed. The successful Bidder will be notified, by letter mailed to the address shown on his bid, that his bid has been accepted and that he has been awarded the contract.

102.03 Cancellation of Award.

The Director reserves the right to cancel the award of any contract before the execution of such contract without any liability against the Department.

102.04 Return of Bid Guaranty.

All bid guaranties, except those of the three lowest Bidders, will be returned within 15 calendar days of the bid opening.

The retained bid guaranties of the three lowest Bidders will be returned within 10 calendar days following the execution of a contract. A Contractor will not be released from its bidding obligations because of errors in the preparation of the bid without forfeiting the bid guaranty.

102.05 Requirement of Contract Bonds.

At the time of the execution of the contract, the successful Bidder shall furnish a performance bond guaranteeing the execution, faithful performance and completion of the work to be done under the contract, and a payment bond guaranteeing payment in full of all bills and accounts for materials and labor used in the work. Each of the bonds shall be in a sum equal to the full amount of the contract and shall meet the following requirements:

a) The form of the bonds shall be as prescribed by the Director, and
b) The bonding company issuing the bonds shall be licensed to transact business in the State of New Hampshire.

In the event the bonding company fails or becomes financially insolvent, the Contractor shall, within 30 calendar days of such failure, or insolvency, file a new and sufficient bond in the amount designated by the Director.

102.06 Execution and Approval of Contract.

The successful Bidder shall furnish the required contract bonds, insurance certificates and, if a corporation, certificates of acknowledgment along with a resolution of the directors evidencing authority of the officer signing the contract to do so and sign the contract within 10 calendar days after the date of notice that the contract has been awarded. No contract shall be considered as effective until it has been fully executed by all of the parties to the contract.

102.07 Failure to Execute Contract.

Failure on the part of the Contractor to execute the contract and file acceptable bonds within 10 calendar days after the date of notice that the contract has been awarded shall be just cause for the cancellation of the award and the forfeiture of the bid guaranty which shall become the property of the City, not as a penalty, but in liquidation of damages sustained. The Director may then decide to award the contract to the next lowest responsible Bidder or readvertise the work.

SECTION 103 -- SCOPE OF WORK

103.01 Intent of Contract. The intent of the contract is to provide for the construction and completion in every detail of the work described. The Contractor shall furnish labor, materials, equipment, tools, transportation and supplies required to complete the work in accordance with the terms of the contract.

103.02 Differing Site Conditions, Suspensions of Work and Significant Changes in the Character of Work.

(A) Differing Site Conditions.

(1) During the progress of work, if subsurface or latent physical conditions are encountered at the site differing materially from those indicated in the contract or if unknown physical conditions of an unusual nature, differing materially from those ordinarily encountered and generally recognized as inherent in the work provided for in the contract, are encountered at the site, the party discovering such conditions shall promptly notify the other party in writing of the specific differing conditions before they are disturbed and before the affected work is performed.

(2) Upon written notification, the Engineer will investigate the conditions and if he/she determines that the conditions materially differ and cause an increase or decrease in the cost or time required for the performance of any work under the contract, an adjustment, excluding loss of anticipated profits, will be made and the contract modified in writing accordingly. The Engineer will notify the Contractor of his/her determination whether or not an adjustment in the contract is warranted.

(3) No contract adjustment which results in a benefit to the Contractor will be allowed unless the Contractor has provided the required written notice.

(4) No contract adjustment will be allowed under this clause for any effects caused on unchanged work.

(B) Suspensions of Work.

(1) If the performance of all or any portion of the work is suspended or delayed by the Engineer in writing for an unreasonable period of time (not originally anticipated, customary, or inherent to the construction industry) and the Contractor believes that additional compensation and/or contract time is due as a result of such suspension or delay, the Contractor shall submit to the Engineer in writing a request for adjustment within 7 calendar days of receipt of the notice to resume work. The request shall set forth the reasons and support for such adjustment.

(2) Upon receipt, the Engineer will evaluate the Contractor's request. If the Engineer agrees that the cost and/or time required for the performance of the contract has increased as a result of such suspension and the suspension was caused by conditions beyond the control of and not the fault of the Contractor, its suppliers or subcontractors at any

approved tier and not caused by weather, the Engineer will make an adjustment (excluding profit) and modify the contract in writing accordingly. The Engineer will notify the Contractor of his/her determination whether or not an adjustment of the contract is warranted.

(3) No contract adjustment will be allowed unless the Contractor has submitted a request for adjustment within the time prescribed.

(4) No contract adjustment will be allowed under this clause to the extent that performance would have been suspended or delayed by any other cause, or for which an adjustment is provided for or excluded under any other term or condition of the contract.

(5) The City may delay the beginning of the work, or any part thereof, if the necessary lands or rights-of-way for such work shall not have been obtained or if materials or equipment to be furnished by the City are not delivered. The Contractor shall have no claims for damages on account of such delay, but shall be entitled to so much additional time wherein to perform and complete the work as determined by the Engineer in writing.

(6) Should the City be prevented or enjoined from proceeding with work or from authorizing its prosecution either before or after its prosecution, by reason of any litigation, the Contractor shall not be entitled to make or assert claim for damage by reason of said delay, but time for completion of the work will be extended to such reasonable time as the City may determine will compensate for time lost by such delay with such determination to be set forth in writing.

(7) Delays in the work due to the absence of the Contractor or his duly authorized superintendent or foreman shall not constitute a reason for extension of time for completion.

(C) Significant Changes in Character of Work.

(1) The Engineer reserves the right to make, in writing, at any time during the work, such changes in quantities and such alterations in the work as are necessary to satisfactorily complete the project. Such changes in quantities and alterations shall not invalidate the contract nor release the Surety, and the Contractor agrees to perform the work as altered.

(2) If the alterations or changes in quantities significantly change the character of the work under the contract, whether or not changed by any such different quantities or alterations, an adjustment, excluding loss of anticipated profits, will be made to the contract. The basis for the adjustment shall be agreed upon prior to the performance of the work. If a basis cannot be agreed upon, then an adjustment will be made either for or against the Contractor in such amount as the Engineer may determine to be fair and equitable.

(3) If the alterations or changes in quantities do not significantly change the character of the work to be performed under the contract, the altered work will be paid for as provided elsewhere in the contract.

(4) The term "significant change" shall be construed to apply only to the following circumstances:

a) When the character of the work as altered differs materially in kind or nature from that involved or included in the original proposed construction or

b) When a major item of work is increased in excess of 125 percent or decreased below 75 percent of the original contract quantity. Any allowance for an increase in quantity shall apply only to that portion in excess of 125 percent of original contract item quantity, or in case of a decrease below 75 percent, to the actual amount of work performed.

103.03 Extra Work.

Extra work shall be performed by the Contractor in accordance with the specifications and as directed and will be paid for as provided under 109.04.

When the contract provides for payment of certain work under extra work, no further order from the Engineer will be necessary for such work; otherwise, when the Engineer determines that extra work is to be performed, an extra work order will be issued.

103.04 Maintenance of Traffic.

The scope of this work will be described under 619. The Engineer, however, may direct special maintenance for the benefit of the travelling public. Such special maintenance will be paid for at contract prices or by extra work as determined and ordered by the Engineer.

When the maintenance of traffic is considered by the Department to be of minor significance, certain contracts may not show this work as a pay item. In such cases, the Contractor shall bear all expense of maintaining traffic over the section of street undergoing improvement and of construction and maintaining such approaches, crossings, intersections and other features as may be necessary, without direct compensation.

103.05 Rights In and Use of Materials Found on the Project.

Upon approval, the Contractor may use on the project such stone, gravel, sand or other material as may be found in the limits of excavation and which is not otherwise specifically reserved by the plans or specifications and payment will be made at the

corresponding contract unit prices, both for the excavation of such materials and for the item for which the excavated material is used. No charge will be made against the Contractor for the materials found in the limits of excavation and so used. However, he shall replace at his own expense with other acceptable material all of that portion of the excavated material so removed and used which was intended for use in embankments, backfills, approaches or the like.

Without written authorization, the Contractor shall not excavate or remove any material from within the project location which is not within the grading limits indicated by the slope and grade lines. Material authorized to be removed outside the grading limits may be subject to compensation from the Contractor at the stipulated price in the contract or at an agreed price at the time of authorization.

It is expressly understood that the Contractor cannot make claim for damages or for anticipated profits on account of the expected use of any materials shown on the plans as existing and later found to be nonexistent or unfit for use.

Unless otherwise provided, the material from any existing old structures scheduled for demolition or removal may be used temporarily by the Contractor in the erection of the new structure. Such material shall not be modified or otherwise damaged without approval.

Unless otherwise specified or permitted, title to all structures found on the project shall remain vested in the City or other owner. All catch basin frames and grates, drop inlet frames and grates and manhole frames and covers, curbing, beam guardrail, guardrail fittings and pipe, unless otherwise specified or directed shall be carefully salvaged and stored within the limits of the project area. Unless specifically provided for in the contract, this work will not be paid for separately but shall be considered subsidiary.

103.06 Final Cleaning Up.

Before acceptance of the work, the Contractor shall remove from within the limits of the project all machinery, equipment, surplus materials, falsework, stumps, rubbish, temporary buildings, barricades and signs. All parts of the work shall be left in a neat and presentable condition. The Contractor shall clean up all plant and storage sites and all other areas used regardless of the project limits. The work prescribed herein will not be paid for separately but shall be considered as subsidiary.

103.07 Value Engineering Proposals by Contractor.

The intent of this specification is to share with the Contractor any cost savings generated on this contract as a result of a proposal or proposals offered by the Contractor and approved by the Department. The purpose is to encourage the use of the Contractor's ingenuity and experience in arriving at alternative, lower cost construction methods than those reflected in the contract documents by the sharing of savings resulting therefrom.

The value engineering proposals contemplated are those that could produce a savings to the Department without, in the sole judgement of the Department, impairing essential functions and characteristics of the facility including but not limited to, service life, economy of operation, ease of maintenance, desired appearance and safety.

As a minimum, the following materials and information shall be submitted with each proposal, plus any additional information requested by the Department:

a) A statement that the proposal is submitted as a Value Engineering Proposal.

b) A description of the difference between the existing contract requirements and the proposed change and the comparative advantages and disadvantages of each including considerations of service life, economy of operations, ease of maintenance, desired appearance and safety.

c) A complete set of plans and specifications showing the proposed revisions relative to the original contract features and requirements.

d) A complete cost analysis indicating the final estimate costs and quantities to be replaced by the proposal, the new costs and quantities generated by the proposal and the cost effects of the proposed changes on operational, maintenance and other considerations.

e) A statement of the time by which a change order adopting the proposal must be executed so as to obtain the maximum cost reduction during the remainder of the contract. This date must be selected to allow the Department ample time for review and processing a change order without affecting the Contractor's schedule. Should the Department find that insufficient time is available for review and processing, it may reject the proposal solely on such basis. If the Department fails to respond to the proposal by the date specified, the Contractor shall consider the proposal rejected and shall have no claim against the Department as a result thereof.

f) A statement as to the effect the proposal will have on the time for completion of the contract.

g) A description of any previous use or testing of the proposal on another Department project or elsewhere and the conditions and results therewith. If the proposal was previously submitted on another Department project, indicate the date, contract number and the action taken by the Department.

Value Engineering Proposals will be considered only when all of the following conditions are met:

a) The Contractor is cautioned not to base any bid prices on the anticipated approval of a Value Engineering Proposal and to recognize that such proposal may be rejected. In the event of rejection, the Contractor will be required to complete the contract in accordance with the plans and specifications at the prices bid.

b) All proposals, approved or not approved by the Department for use in the contract, become the property of the Department and shall contain no restrictions imposed by the Contractor on their use or disclosure. The Department shall have the right to use, duplicate and disclose in whole or in part any data necessary for the utilization of the proposal. The Department retains the right to utilize any accepted proposal or part thereof on any other or subsequent projects without any obligation to the Contractor. This provision is not intended to deny rights provided by law with respect to patented materials or processes.

c) If the Department already has under consideration certain revisions to the contract or has approved certain changes in specifications or standards for general use which are subsequently incorporated in a Value Engineering Proposal, the Department shall reject the Contractor's proposal and may proceed with such revisions without any obligation to the Contractor.

d) The Contractor shall have no claim against the Department for any costs or delays due to the Department's rejection of a Value Engineering Proposal, including but not limited to, development costs, anticipated profits or increased material or labor costs resulting from delays in the review of such proposal.

e) The Department shall be the sole judge as to whether a proposal qualifies for consideration and evaluation. It may reject any proposal that requires excessive timer or costs for review, evaluation and/or investigations or which is not consistent with the Department's design policies and basic design criteria for the project.

f) The Engineer may reject all or any portion of work performed pursuant to an approved Value Engineering Proposal if he determines that unsatisfactory results are being obtained. The Engineer may direct the removal of such rejected work and require the Contractor to proceed in accordance with the original contract requirements without reimbursement for any work performed under the proposal, or for its removal. Where modifications to the Value Engineering Proposal are approved in order to adjust to field or other conditions, reimbursement will be limited to the total amount payable for the work at the contract bid prices as if it were constructed in accordance with the original contract requirements. Such rejection or limitation of reimbursement shall not constitute the basis of any claim against the Department for delay of for any other costs.

g) The proposal shall not be experimental in nature but shall have been proven to the Department's satisfaction under similar or acceptable conditions on another Department project or at another location acceptable to the Department.

h) Proposals shall be considered only if equivalent options are not already provided in the contract documents.

i) The savings generated by the proposal must be of sufficient significance, in the sole judgement of the Department, to warrant review and processing.

j) A proposal changing the types and/or thickness of the pavement structure will not be considered.

k) If additional information is needed to evaluate proposals, this information must be provided in a timely manner. Failure to do so will result in rejection of the proposal. Such additional information could include, where design changes are proposed, results of field investigations and surveys, design computations and field change sheets.

If the Value Engineering Proposal is accepted by the Department, the changes and payment thereof will be authorized via a change order. Reimbursement to the Contractor will be made as follows:

a) The changes will be incorporated into the contract via changes in the quantities of unit bid items or by supplementary agreement as appropriate, in accordance with the specifications.

b) The costs of the revised work as determined from the aforementioned changes in quantities and any new items will be paid directly. In addition to such payment, the Department will pay to the Contractor, via a separate item, 50 percent of the savings to the Department as reflected by the difference between the above payment and the cost of the related construction required by the original contract plans and specifications computed at contract bid prices.

c) The Contractor's costs for development, design and implementation of the Value Engineering Proposal are not eligible for reimbursement.

d) The Contractor may submit Value Engineering Proposals for an approved subcontractor, provided that reimbursement is made by the Department to the Contractor. Subcontractors may not submit a proposal except through the Contractor.

SECTION 104 -- CONTROL OF THE WORK

104.01 Authority of Engineer.

All work shall be done under the supervision of the Engineer and to his satisfaction. The Engineer will decide all questions which may arise as to the quality and acceptability of materials furnished and work performed and as to the rate of progress of the work; all questions which may arise as to the interpretation of the contract documents; and all questions as to the acceptable fulfillment of the contract on the part of the Contractor

The Engineer will have the authority to suspend the work wholly or in part for such periods as he may deem necessary due to failure of the Contractor to correct conditions unsafe for the general public; for failure to carry out provisions of the contract; for failure to carry out orders; for conditions considered unsuitable for the prosecution of the work; such as hazardous materials, extremes of wind, temperatures, or precipitation, either existing or forecasted with reasonable certainty to occur and which could be harmful to the scheduled operation; in order to comply with directives of the New Hampshire Department of Environmental Services, Division of Air Resources implementing the emergency episode procedure; or for any other condition or reason deemed to be in the public interest.

104.02 Plans and Working Drawings.

The approved plans on file in the office of the Department will show the location, detail and dimensions of the work.

These plans shall be supplemented by the Contractor with such additional working and detail drawings as may be found necessary to control adequately the work and its prosecution. The Contractor's drawings shall be furnished well in advance of the work to allow the Engineer time to review the drawings and will be prepared by a Professional Engineer if so noted in the contract or on the plans. When requested, the Contractor shall furnish his basic calculations.

Working drawings for steel structures shall consist of shop detail, erection and other working plans showing dimensions, sizes of material, details and other information necessary for the complete fabrication and erection of the metal work. Working drawings for concrete structures shall consist of such detailed plans as may reasonably be required for the successful prosecution of the work, and which are not included in the plans furnished by the Engineer. These may include plans for falsework, bracing, centering and form work; masonry layout diagrams; and diagrams for bent reinforcement. Manufacturer's engineering data for prefabricated material, including that for falsework and forms shall be furnished with each set of drawings.

The Contractor shall submit to the Engineer for approval 3 sets of any required preliminary detailed working drawings. Prior to the approval of the drawings, any work done or materials ordered for the structures involved shall be at the Contractor's risk. One set of the drawings will be returned to the Contractor approved or marked with

corrections to be made. After approval has been given, the Contractor shall supply the Engineer with 5 sets of the revised detailed working drawings.

The Contractor may propose detours not shown on the plans. Should he desire written approval of major detours, he shall submit plans in triplicate which shall show the proposed location, layout and signing.

The contract price will include the cost of furnishing all working drawings.

The Engineer's approval of the Contractor's working drawings will not relieve the Contractor from responsibility for errors in dimensions or for incorrect fabrication and erection processes, or from responsibility to complete the contract work.

104.03 Conformity with Plans and Specifications.

All work performed and all materials furnished shall be in reasonably close conformity with the lines, grades, cross sections, dimensions and material requirements shown on the plans or indicated in the specifications. If tolerances are specified, deviations beyond the specified limits will be unacceptable. When tolerance limits are not specified, and only single dimensions are indicated, such dimensions are to be regarded as nominal dimensions.

In the event the Engineer finds that the materials or the finished product in which the materials are used are not within reasonably close conformity with the plans and specifications but that reasonably acceptable work has been produced, he shall then make a determination if the work shall be accepted and remain in place. In this event, the Engineer will document the basis of acceptance by contract modification which will provide for an appropriate adjustment in the contract price for such work or materials as he deems necessary to conform to his determination based on engineering judgement.

In the event the Engineer finds that the work performed or that the materials or the finished product in which the materials are used are not in reasonably close conformity with the plans and specifications and have resulted in and inferior or unsatisfactory product, the work or materials shall be removed and replaced or otherwise corrected by and at the expense of the Contractor.

104.04 Coordination of Specifications.

The specifications, supplemental specifications, plans, special provisions and other special requirements and documents are essential parts of the contract and a requirement occurring in one is as binding as though occurring in all. They are intended to be complementary and to describe and provide for a complete work. In case of discrepancy, calculated dimensions, unless obviously incorrect, will govern over scaled dimensions and the parts of the contract will prevail in the following descending order:

Special Contract Requirements *
Special Provisions
Plans
Supplemental Specifications
Standard Specifications

* Includes Prosecution of Work, Traffic
Control Plan and Special Attentions.

The Contractor shall take no advantage of any apparent error or omission in the plans or specifications. In the event the Contractor discovers such an error or omission, he shall immediately notify the Engineer. The Engineer will then make such corrections and interpretations as may be deemed necessary for fulfilling the intent of the plans and specifications. Where said correction of errors or omissions, except as provided below, adds to the amount of work to be done by the Contractor, compensation for such additional work shall be made under the provisions for extra work.

The fact that specific mention of a fixture or of any part of the work is omitted in the specifications, whether intentionally or otherwise, when the same is clearly shown or indicated on the plans, or is usually and customarily required to complete fully such work as specified, will not entitle the Contractor to consideration in the matter of any claim for extra compensation, but said fixtures or work or both, shall be installed or done the same as if called for both by the plans and by the specifications.

All work indicated on the plans and not mentioned in the specifications or vice versa, and all work and materials usual and necessary to make the work complete in all its parts, whether or not they are indicated on the plans or mentioned in the specifications, shall be furnished and executed the same as if they were called for by both the plans and specifications.

104.05 Cooperation by Contractor.

The Contractor will be supplied with a minimum of two sets of the contract, including plans and special provisions, one complete set of which the Contractor shall keep available on the work site at all times.

The Contractor shall give the work the constant attention necessary to facilitate the progress thereof, and shall cooperate with the Engineer, his inspectors and other Contractors in every way possible.

Except as permitted, the Contractor shall have on the work his agent, a competent English-speaking Superintendent capable of reading and thoroughly experienced in the type of work being performed. The Superintendent shall have full authority to receive and execute orders or directions of the Engineer without delay and to promptly supply such

materials, equipment, tools, labor and incidentals as may be required. Such superintendence shall be furnished irrespective of the amount of work sublet. The Superintendent shall be an owner of, or employee of the Contractor; and shall not be an owner, employee or have any affiliation with any firm which is acting as a subcontractor on the project.

Should the Contractor or any of his duly authorized representatives fail to cooperate to the extent that the integrity of the work is compromised, or the safe prosecution of the work is jeopardized, the Engineer may immediately suspend all work.

Any unsafe conditions will be corrected by the Contractor and the uncooperative person or persons shall be removed from the project before resumption of the work. The inability to rectify the situation may result in the termination of the contract in accordance with the provisions of 107.01.

The Contractor shall not sell and shall neither permit nor suffer the introduction or use of intoxicating liquors or other materials upon or about the work embraced in this contract.

104.06 Cooperation with Utilities.

The Contractor will notify all utility companies, pipe line owners or other parties affected and have all necessary adjustments of the public or private utility fixtures, pipe lines and other appurtenances within or adjacent to the limits of construction made as soon as practicable.

Water lines, gas lines, sewer lines, wire lines, service connections, water and gas meter boxes, water and gas valve boxes, light standards, cableways, signals and all other utility appurtenances within the limits of the proposed construction which are to be relocated or adjusted are to be moved by the owners at their expense, except as otherwise provided for in the special provisions or as noted on the plans.

It is understood and agreed that the Contractor has considered in the bid all of the permanent and temporary utility facilities in their present or relocated positions as shown on the plans and as evident on the site, and that no additional compensation will be allowed for any delays, inconvenience or damage sustained due to any interference from such utility facilities or the operation of moving them.

Attention is directed to the possible existence of underground facilities not known to the Department or in a location different from that which is shown on the plans or in the special provisions.

New Hampshire State Law, RSA 374 amended requires that anyone who excavates on public property must notify the Damage Preventions System referred to in RSA 374:49 at least 72 hours prior to starting work.

The Contractor shall be responsible to notify the DIG- SAFE Call Center (Tel. No. 1-800-DIG-SAFE) at least 72 hours in advance of starting any excavation or erecting permanent construction signing. Saturdays, Sundays and legal holidays are not to be included in the computation of the required 72 hour notice.

The Contractor shall provide the Engineer's representative on the project with the date, time, numbers assigned and the name of the person answering the call at the DIG-SAFE Center which will be recorded on the project daily report.

Notice of intent to excavate cannot be made more than 30 calendar days prior to actual work. All utility facilities within the proposed work, including advance construction sign locations, should be identified and marked prior to construction. Suspension of the work for more than 30 calendar days at any time will require re-notification of the DIG-SAFE Center to ensure validity of markings and to protect interim utility construction.

The Contractor shall provide the Engineer's representative with sufficient lead time to allow the layout of advance permanent construction signs and excavation areas prior to the start of the 72 hour period required by DIG- SAFE.

The Contractor shall additionally notify municipal and privately owned utilities to identify, locate and mark their facilities separately from those to be located through the DIG-SAFE system.

Once located and marked, the Contractor shall maintain all utility markings and provide access to any and all installations to permit repairs and maintenance of service as needed.

104.07 Cooperation Between Contractors.

The Department reserves the right at any time to contract for and perform other or additional work on or near the work covered by the contract.

When separate contracts are let within the limits of any one project or on adjacent projects, each Contractor shall conduct his work so as not to interfere with or hinder the progress or completion of the work being performed by other Contractors. Contractors working on the same project or adjacent projects shall cooperate with each other in a manner to serve the best interest of the City. In case of any unavoidable interference, the Engineer will determine priorities.

Each Contractor involved shall assume all liability, financial and otherwise, in connection with his contract and shall protect and save harmless the City from any and all damages or claims that may arise because of inconvenience, delay, or loss experienced by him because of the presence and operations of other Contractors working within the limits of the same project.

The Contractor shall arrange his work and shall place and dispose of the materials being used so as not to interfere with the operations of the other Contractors within the limits of

the same project or on adjacent projects. He shall join his work with that of the others in an acceptable manner and shall perform it in proper sequence to that of the others.

104.08 Construction Stakes, Lines and Grades.

The Contractor shall furnish stakes and do all survey and engineering required for establishing grades, lines, levels, dimensions and reference points for all trades. All lines and grade work not presently established at the site shall also be laid out by the Contractor in accordance with the plans and specifications, as directed by the Engineer.

The Contractor will be held responsible for the preservation of all stakes and marks, and if any of the construction stakes or marks have been carelessly or willfully destroyed or disturbed by the Contractor, they shall promptly be replaced by him as directed by the Engineer.

The Contractor shall compare all grades, lines, levels and dimensions as shown on the plans with actual site conditions and shall promptly report to the Engineer, before commencing work, any inconsistencies he may discover.

No separate payment will be made for the work described in this section.

104.09 Authority and Duties of Representatives of the Engineer.

The Engineer may appoint such assistants and representatives as he desires and they shall be granted full access to the work or to mills and plants in which work is being done for use under the contract. They have authority to give directions pertaining to the work or to the safety and convenience of the public, to approve or reject materials, to suspend any work that is being improperly or unsafely performed, to make measurements of quantities, to keep records of costs and otherwise represent the Engineer. The Contractor may, however, appeal their decision to the Engineer himself, but any work done pending settlement is at the Contractor's own risk.

Except as permitted and instructed by the Engineer, the assistants and representatives are not authorized to revoke, alter, enlarge, relax or release any requirements of the contract, nor to issue instructions contrary to the contract. They are not authorized to act as superintendents or foremen for the Contractor or to interfere with the management of the work by the Contractor. Any advice which the assistants or representatives of the Engineer may give the Contractor shall not be construed as binding the Engineer or the Department in any way, nor releasing the Contractor from the fulfillment of the terms of the contract.

All transactions between the Contractor and the representatives of the Engineer which are liable to protest or where payments are involved shall be made in writing.

104.10 Inspection of Work.

All materials and each part or detail of the work shall be subject to inspection by the Engineer. The Engineer shall be allowed access to all parts of the work and shall be furnished with such information and assistance by the Contractor as is required to make a complete and detailed inspection.

The Contractor, at any time before acceptance of the work, shall remove or uncover such portions of the finished work as may be directed by the Engineer. After examination, the Contractor shall restore such portions of the work to the standard required by the specifications. Should the work thus exposed or examined prove acceptable, the uncovering or removing and the replacing of the covering or making good of the parts removed will be paid for as extra work. Should the work so exposed or examined prove unacceptable, the uncovering or removing and the replacing of the covering or making good of the parts removed will be at the Contractor's expense.

Any work done or materials used without supervision or inspection by an authorized Department representative may be ordered removed and replaced at the Contractor's expense unless the Department representative failed to inspect after having been given reasonable notice that the work was to be performed.

When any unit of government or political subdivision, utility or any corporation is to accept or pay a portion of the cost of the work covered by the contract or has an interest in the work for other reasons, its respective representatives shall have the right to inspect the work. Such inspection shall in no sense make any unit of government or political subdivision, utility or any corporation a party to the contract and shall in no way interfere with the rights of either party hereunder.

The inspection of the work shall not constitute acceptance of same and shall not relieve the Contractor of any of his obligations to fulfill his contract.

104.11 Removal of Unacceptable and Unauthorized Work.

All work which does not conform to the requirements of the contract will be considered unacceptable unless otherwise determined acceptable under the provisions in 104.03.

Unacceptable work, whether the result of poor workmanship, use of defective materials, damage through carelessness or any other cause, found to exist prior to the final acceptance of the work, shall be removed immediately and replaced in an acceptable manner by and at the Contractor's expense, notwithstanding that such work and materials have been previously overlooked by the Engineer and accepted and estimated for payment.

Work done contrary to the instructions of the Engineer, work done beyond the lines shown on the plans or as given, except as herein specified, or any extra work done without authority will be considered as unauthorized and will not be paid for under the

provisions of the contract. Work so done may be ordered removed or replaced at the Contractor's expense.

Upon failure on the part of the Contractor to comply forthwith with any order made under the provisions of this subsection, the Engineer will have authority to cause unacceptable work to be remedied or removed and replaced and unauthorized work to be removed and to deduct the cost from any moneys due or to become due the Contractor.

104.12 Load and Speed Restrictions.

Gross loads shall not exceed the legal gross loads on any highway nor exceed the gross load limits posted on any bridge.

Where damage would be caused, the Contractor shall not operate equipment of such type, weight or so loaded as to cause damage to structures, to the roadway or to any other work. Hauling of materials over a base course or surface course under construction shall be limited as directed. The Contractor shall be responsible for all damage done by his equipment. A special permit will not relieve the Contractor of liability for damage which may result from the moving of material or equipment.

It is specifically called to the Contractor's attention that streets not on the State system are the property of the City and they are maintained and regulated by the authorities of the City. Since many of these streets are not constructed for the continuous passage of heavy construction loads and equipment, the Contractor shall, prior to subjecting such streets to such loads, secure the consent of the proper municipal authorities. During the use of these streets, he shall maintain them in a condition satisfactory to the Engineer and safer for the travelling public. After hauling operations are completed, he shall repair, to the satisfaction of the Engineer, all damage incurred by his use of these streets.

104.13 Maintenance During Construction.

The Contractor shall maintain the work during construction and until the project is accepted. This maintenance shall constitute continuous and effective work prosecuted day by day, with adequate equipment and forces, to the end that the work and the work area are kept in satisfactory condition at all times.

The Contractor shall take every reasonable precaution against spillage of construction materials on existing highways, streets and bridges. The Contractor's attention is called to "Spillage of Material" under 106.01. If spillage does occur, the Contractor shall remove such spillage immediately after its occurrence.

Maintenance shall generally include but not be limited to cleaning and maintenance of erosion control, drainage and sewer structures and limiting the accumulation of debris on the work site.

The Contractor shall provide adequate measures to prevent dust from constituting a nuisance to abutters by wetting disturbed earth surfaces or by use of calcium chloride or other approved palliatives.

All cost of maintenance work during construction and before the project is accepted shall be included in the unit prices bid on the various pay items and the Contractor will not be paid an additional amount for such work.

104.14 Failure to Maintain the Work.

If the Contractor, at any time, fails to comply with the provisions of 104.13, the Engineer may direct the Contractor to comply with the required maintenance provisions. If the Contractor fails to remedy unsatisfactory maintenance within the time specified in any order, the Engineer may immediately proceed to maintain the project, and the entire cost of this maintenance will be deducted from money due or to become due the Contractor on his contract.

104.15 Acceptance.

Upon due notice from the Contractor of presumptive completion of the entire project, the Engineer will make an inspection. If all construction provided for and contemplated by the contract is found completed to his satisfaction, this inspection shall constitute the final inspection and the Engineer will make the final acceptance and notify the Contractor and his surety in writing of this acceptance as of the date of the final inspection. Such final acceptance shall be conditional upon the subsequent remedying of defects which may become manifest within a period of twelve (12) months from date of acceptance.

If the inspection discloses any unsatisfactory work the Engineer will give the Contractor the necessary instructions for correction of such work and the Contractor shall immediately comply with and execute such instructions. Upon correction of the work, another inspection will be made which shall constitute the final inspection provided the work has been satisfactorily completed. In such event, the Engineer will make final acceptance and notify the Contractor and his surety in writing of his acceptance as of the date of final inspection. Such final acceptance shall also be conditional upon the subsequent remedying of defects which may become manifest within a period of twelve (12) months from date of acceptance.

Twelve months after the date of the certification of acceptance or as soon thereafter as practicable, the Engineer shall make a re-inspection of the work or cause the same to be made. If said work shall be found satisfactory and the work not to have deteriorated through defects of workmanship or material, then the Engineer shall certify the release of the guarantee. Such certification shall be a pre-requisite to the release of the surety on the Contract Bond. If, however, the re-inspection discloses defects due to the non- fulfilment of this contract or non-compliance with its requirements, the Engineer shall so notify the

Contractor in writing. There- upon, the Contractor shall, at his own expense, make good all defects of workmanship and materials which shall be a pre- requisite to the release of the guarantee and to the release of the surety on the Contract Bond. If, however, the Contractor shall, after due notice, refuse or neglect to make good the defects to the satisfaction of the Engineer, the Director may proceed in the manner prescribed in 107.10.

104.16 Claims for Adjustment.

If the Contractor deems that additional compensation is due him for work or material not clearly specified in the contract, or not ordered as extra work, the Contractor shall notify the Engineer, in writing, of his intention to make claim for such additional compensation before he begins the work on which he bases the claim.

If such notification is not given and the Engineer is not afforded proper facilities by the Contractor for keeping strict account of actual cost as required, then the Contractor hereby agrees to waive any claim for such additional compensation. Such notice by the Contractor and the fact the Engineer has kept account of the cost as aforesaid, shall not, in any way, be construed as proving or substantiating the validity of the claim. if the claim , after consideration by the Engineer, is found to be just, it will be paid as extra work, as provided herein for force account work. Nothing in this section shall be construed as establishing any claim contrary to the terms of 104.02.

SECTION 105 -- CONTROL OF MATERIAL

105.01 Source of Supply and Quality Requirements.

All materials used shall meet all quality requirements of the contract. In order to expedite the inspection and testing of materials, the Contractor shall notify the Engineer of the proposed sources of materials prior to delivery. At the option of the Engineer, material may be approved at the source of supply before delivery is started. If it is found after trial that sources of supply for previously approved materials do not produce specified products, the Contractor shall furnish materials from other sources. No material which, after approval, has in any way become unfit for use shall be used in the work. All materials shall be new unless otherwise specifically prescribed in the contract documents.

Nothing in the contract shall be construed as vesting in the Contractor any right of property in the materials used after they have been attached or affixed to the work or the soil but all such materials shall, upon being so attached or affixed, become the property of the City.

105.02 Samples, Tests, Cited Specifications.

All materials and products proposed to be used in the construction shall be inspected, sampled, tested and approved by the Engineer or accepted by a Certificate of Compliance from the Contractor as specified in 105.03. The testing laboratory will be selected by the Engineer. Materials found to be unacceptable and unauthorized will not be paid for and, if directed by the Engineer, shall be removed at the Contractor's expense.

Unless otherwise specified, all testing of materials shall be paid for by the Contractor who will be reimbursed based on paid invoices. When work already in place is disturbed for the purpose of testing and the tests show materials or workmanship to be defective, all costs for testing and repair of the work shall be borne by the Contractor.

All samples and all testing and laboratory methods shall be in accordance with the methods prescribed by the availability pertinent publications of the AASHTO, ASTM or FSS, unless other standard methods are designated, except that the Engineer reserves the right to make use of any information or method of testing to determine the quality of material. With respect to all the above specifications, whenever specifications and serial numbers are stipulated, unless specified dates are indicated, the references shall be construed to be the standard, interim or tentative specifications and serial numbers of the pertinent body as amended to date of Invitation for Bids. Samples for testing purposes shall be furnished by the Contractor at no cost to the Department.

Testing will only be done when ordered by the Engineer.

All materials being used are subject to inspection, test or rejection at any time.

Random samples of materials or completed work may be taken as checks on the control sampling and testing to determine reasonable compliance with the specifications at any time prior to final acceptance of the work, either while any phase of the work is in progress or after it has been completed. The extent and locations of such random sampling will be as designated by the Engineer. Copies of all tests will be furnished to the Contractor's representatives when requested.

In all AASHTO or ASTM specifications, the sections entitled "Inspection" shall be amended to provide that test of materials may be made in any Laboratory as defined in 101.01.

All sieves shall conform to the requirements of the AASHTO M 92 and shall be square hole wire cloth sieves.

When sampling and testing of seeds is required, sampling and testing methods shall be as prescribed in the Rules and Regulations established in accordance with RSA 433.

105.03 Certificates of Compliance.

Prior to, or at the time of field delivery, if materials are to be permanently incorporated in the work for which there is no prescribed schedule of testing by the Engineer, the Contractor shall submit three (3) copies of a certificate of compliance for all such manufactured material. The certificate shall show the following:

a) Date of certification.
b) Description of material supplied.
c) Name of the Contractor to whom the material is supplied.
d) Project name and numbers to which the material is consigned.
e) Contract item number and contract item name.
f) Name of Manufacturer and/or Supplier.
g) The material meets the requirements of the pertinent specification required by the contract.
h) That records will be maintained for the defined 3 year period.
i) Signature of a person having legal authority to bind the originator of the certificate.

Certificates of compliance submitted from either the manufacturer, the supplier or the Contractor, in the format as prescribed (see sample that follows), will be accepted. All documentation for said certificates must be maintained by the originator of the certificate for a period of not less than three years from the date of acceptance of the project.

Certificates of compliance covering more than one type of material or item will be acceptable if a listing is made of the item number, name of item, manufacturer and/or supplier for each material covered.

Materials listed in the above certificates may be subject to random sampling and testing by the Engineer. Certified materials which fail to meet the specification requirement will not be accepted.

The following is a list of materials which require certificates of compliance. This list is not all-inclusive. Certain special materials not commonly used on all projects will also require certificates.

Bearing Pads
Bearing Assemblies
Bridge Elastomeric Expansion Devices
Bridge Railing and Hardware
Bituminous Materials
Castings: Grates, Frames and Covers
Concrete: Curing, Waterproofing, Sealing Agents and Admixtures
Concrete: Blocks, Precast Sections, Light Pole Bases and Bounds
Culverts, Underdrains, Structural Plate Pipe
Delineators
Fence Materials: Posts, Fabric and Hardware
Geotextiles
Guardrail: Beam Rail, Cable, Posts and Fittings
Joint Materials: Cork, etc.
Luminaires and Supports
Matting for Erosion Control
Membrane Waterproofing
Paint
Pavement Markers: Tapes, etc.
Piles: Steel, Timber, Treated Timber and Permanent Steel
Sheeting
Pipe: Water, Sewer, Drainage and Accessories
Shear Connectors
Sign Materials: Posts, Trusses, Fasteners, Sheeting and Panels
Steel: Reinforcing Bars and Mesh, Minor Structural and Structural Steel
Traffic Signals and Equipment
Utility: Conduits and Pull Boxes
Waterstops: Rubber, Polyvinyl Chloride, Copper
Witness Markers

Supplementing the above certificates, upon request, the Engineer shall be furnished with a copy of the manufacturer's certificate of materials showing the physical properties, chemical composition, methods of testing and other relevant data.

105.04 Plant Inspection.

The Engineer may undertake the inspection of materials at the source. Manufacturing plants may be inspected periodically for compliance with specified manufacturing

methods and materials samples will be obtained for laboratory testing for compliance with materials quality requirements. This may be the basis for acceptance of manufactured lots as to quality.

In the event plant inspection is undertaken, the following conditions shall be met:

a) The Engineer shall have cooperation and assistance of the Contractor and the producer of the materials.

b) The Engineer shall have full entry at all times to such parts of the plant as may concern the manufacture or production of the materials being furnished.

c) If required, the Contractor shall arrange for an approved building for the use of the Engineer; such building to be located conveniently near the plant, independent of any building being used by the material producer, in which to house and use the equipment necessary to carry on the required tests.

d) Adequate safety measures shall be provided and maintained.

105.05 Acceptance of Manufactured Materials.

It is understood that the Department reserves the right to retest all materials that have been tested and approved at the source of supply prior to incorporation into the work and to reject all materials which, when retested, do not meet the requirements of these specifications or those established for the specific project.

Sample Certificate of Compliance

ORGANIZATION LETTERHEAD

Date _____

WE HEREBY CERTIFY THAT _____

Description, Kind of material or Trade Name

Furnished to _____

Contractor (Prime of Subcontractor)

For Use on _____

Project Name **Project Number**

Used for Item Number* _____

Name of Item

Manufactured by _____

Supplied by _____

MEETS THE REQUIREMENTS OF THE PERTINENT PROJECT PLANS, SPECIAL PROVISIONS, AND SPECIFICATIONS OF THE MANCHESTER, NH DEPARTMENT OF HIGHWAYS IN ALL RESPECTS. PROCESSING, PRODUCT TESTING AND INSPECTION CONTROL OF RAW MATERIALS ARE IN CONFORMANCE WITH ALL APPLICABLE SPECIFICATION, DRAWINGS AND/OR STANDARDS OF ALL ARTICLES FURNISHED.

All records and documents pertinent to this certificate and not submitted herewith will be maintained available by the undersigned for a period of not less than three years from the date of acceptance of the project.

_____

(Manufactured, Supplier or Contractor)

Signed by _____

(Officer of Organization)

Title _____

*** For more than one item, list each Item Number, name of Item, Manufacture and/or Supplier.**

105.06 Storage of Materials.

Materials shall be so stored as to assure the preservation of their quality and fitness for the work. Stored materials, even though approved before storage, may again be inspected prior to their use in the work. Stored materials shall be located so as to facilitate their prompt inspection. Approved portions of the project area may be used for storage purposes and for the placing of the Contractor's plant and equipment but any additional space required therefore must be provided by the Contractor at his expense. Private property shall not be used for storage purposes without written permission of the owner or lessee and if requested, copies of such written permission shall be furnished to the Engineer. All storage sites shall be restored to their original condition by the Contractor at his expense.

105.07 Handling Materials.

All materials shall be handled in such manner as to preserve their quality and fitness for the work.

105.08 Unacceptable Materials.

All materials not conforming to the requirements of the specifications shall be considered as unacceptable and all such materials will be rejected and shall be removed immediately from the site of the work unless otherwise instructed by the Engineer. Rejected material shall not be used until the defects have been corrected and the material is approved by the Engineer. Should the Contractor fail to remove defective materials within the time indicated in writing, the Engineer shall have authority to cause the materials to be removed at the Contractor's expense.

105.9 Alternates, Substitutions and Contractor's Options.

Whenever the Plans and Specifications, any item of equipment or material is designated by reference to a particular brand, manufacturer or trade name, it is understood that an approved equal product, acceptable to the Engineer may be substituted by the Bidder or Contractor. In the event of acceptance of any alternate or substitution, it shall be the responsibility of the Contractor to coordinate such alternate or substitute items with all other items to be furnished to assure the proper fitting together of all items. Any additional cost incident to the coordination and/or fitting together of alternate or substitute items shall be borne by the Contractor at no extra cost to the Owner. Similar responsibility applies to items which are left to the Contractor's option.

105.10 Disposal of Surplus Waste Materials.

When practicable and whenever directed, surplus and waste material shall be disposed of by flattening slopes or for other grading with the project. When specified on the plans or

ordered, surplus material shall be hauled off the project. Such material shall be placed in accordance with the appropriate specification. In case it is impossible to dispose of all the surplus and waste material in the manner described above and when the contract does not contain the item of embankment-in-place, the remainder shall be disposed of as directed or as approved. It shall be the Contractor's responsibility to secure disposal areas for surplus and waste materials. Disposal Agreements, as provided by the Department, for such areas must be submitted to the Engineer for approval. The following form shall be completed and submitted for each disposal area.

DISPOSAL AGREEMENT

(This does not apply to disposal areas
operated by a public agency)

Project Name_____ Number_____

Owner of Property_____Location_____

As specified in 203.3.9.6, this agreement is required to be completed and submitted for approval when the Contractor obtains permission from the landowner to dispose of waste materials on his property.

This form sets forth the conditions under which the Department will approve the Contractor to dispose of waste material on the property of the above landowner.

The Owner and the Contractor, by signing below, acknowledge and agree to the following specifications:

1) Other than under the conditions of this instrument, the Department is not a party to any agreement or contract between the Owner and Contractor.

2) All wood less than 5 inches in diameter and not salvaged for firewood shall be chipped. Burying of brush shall not be permitted. Stumps, roots and rotten wood may be buried at approved sites on or off the project. Approved sites shall be a minimum of 4 feet above the seasonal high groundwater table; and have a minimum of 18 inches of clean fill cover material graded and shaped to present a pleasing appearance. Approval of the proposed disposal area will be contingent upon agreement by the Contractor and the property owner to leave the area in such shape that it will blend with the surrounding terrain and that erosion will be kept to the minimum. Without special permission, slopes shall not be left steeper than 3:1. No disposal area shall be left in such condition that erosion after completion of the work might result in water pollution by silt or other deleterious substances. Areas shall be left in such shape and condition that material will not wash to block or obstruct drainage ways. If holes caused by settlement appear, they shall be filled as directed.

Unless otherwise ordered, disposal areas shall be covered with 6 inches of material capable of supporting vegetation and either fertilized and seeded with grass seed or planted with seedlings. Grass seed used shall be slope seed as specified in 644. Seedlings shall be set out in accordance with accepted horticultural practices as directed.

Unless permission is given to preserve access roads to disposal areas adjacent to

highways, such roads shall be obliterated.

3) The contract requirements as to disposal of unwanted material from the roadway excavation are similar to those in section (2) above except that the minimum depth of cover and the height above seasonal high water is not specified and slopes shall not be left steeper than 2:1.

4) Approval by the Engineer to open and operate a disposal area will terminate at the completion of the project.

It is hereby agreed among the Owner, the Contractor and the Engineer that this disposal area will be finished in accordance with the above specifications as well as any pertinent local, State or Federal regulations. Indicated after the box checked below is the landscaping treatment to be performed in order for the area to be acceptable to the Department:

[ ] The entire area is to be fertilized and seeded.

[ ] The entire area is to be planted and seeded.

[ ] Part of the area is to be seeded and the remainder planted with seedlings as agreed below.

Seedlings shall be_____
(Age or size, species, variety)

planted 8 feet c-c or_____
(Spacing)

Any additional landscaping work to be done and any other pertinent information which is desired to be a part of the official records may be shown here:

The Contractor's attention is directed to RSA 483-A, the requirements of which must be fulfilled if this disposal area involves filling of wetlands. Furthermore, the Contractor's attention is directed to RSA 149:8-a, the provisions of which must be fulfilled if this

operation involves filling on the border of the surface waters of the state or will significantly alter the characteristics of natural runoff or create an unnatural runoff; and RSA 149-M if the Contractor intends to dispose of solid waste including stumps. The Contractor's attention is also directed to Sections 9 and 10 of the River and Harbor Act of 1899, and Section 404 of the Clean Water Act. Compliance may require a permit for work in or over "navigable waters of the U.S.", or material placed in "waters of the U.S." including wetlands.

Signature of owner Date	Name(s) or Signature(s) of Joint Owner(s)
Street	Street
Town	Town
Contractor	Approved as to Landscaping Provisions:
By (Signature) Date	Project Engineer Date

If joint owners are involved, the Owner signing should give all other names and addresses. Separate forms should be filed in connection with adjacent owners.

SECTION 106 -- LEGAL RELATIONS & RESPONSIBILITY TO PUBLIC

106.01 Laws to be Observed.

The Contractor shall keep fully informed of all Federal and State laws, all local laws, ordinances and regulations and all orders and decrees of bodies or tribunals having any jurisdiction or authority, which in any manner affect those engaged or employed on the work or which in any way affect the conduct of the work. The contractor shall at all times observe and comply with all such laws, ordinances, regulations, orders and decrees; and shall protect and indemnify the City and its representatives against any claim or liability arising from or based on the violation of any such law, ordinance, regulation, order or decree, whether by the Contractor, the subcontractors, suppliers of materials or services, or others engaged by the Contractor, or the employees of any of them. If any discrepancy or inconsistency is discovered between the contract documents and any law, ordinance, regulation, order or decree, the Contractor shall immediately report the same to the Engineer in writing.

Each and every provision of law and clause required by law to be inserted in the contract shall be deemed to be inserted and the contract shall be read and enforced as though it were included and if through mistake or otherwise, any such provision is not inserted or is not correctly inserted, then upon the application of either party, the contract shall forthwith be physically amended to make such insertion.

The Contractor shall take out and maintain during the life of the contract Workmen's Compensation Insurance for all of his employees employed at the site of the project and in case any work is sublet the Contractor shall require the subcontractor, similarly, to provide Workman's Compensation Insurance for all of the latter's employees unless such employees are covered by the protection afforded by the Contractor. In case of any class of employees engaged in hazardous work under this contract at the site of the project is not protected under the Workman's Compensation Statute, the Contractor shall provide and shall cause each subcontractor to provide adequate insurance for the protection of his employees not otherwise protected.

The Contractor shall be and remain an independent contractor with respect to all services performed and shall accept full and exclusive liability for the payment of any and all contributions or taxes for social security, unemployment insurance or old-age retirement benefits, annuities now or hereafter imposed, or other remuneration paid to persons employed by the Contractor on work performed under the terms of the contract and shall obey all lawful rules and regulations and meet all lawful requirements which are now or hereafter may be issued or promulgated under said respective laws by any duly authorized State or Federal Officials. The Contractor shall also indemnify and save harmless the City of Manchester from such contributions or taxes or liability therefore.

Except for work done under items in the contract, work prescribed herein will not be paid for separately but will be considered subsidiary.

The Contractor's attention is further called to RSA 281-A: 18 which reads in part:

281-A:18 Contractor's Liability for Subcontractors. A contractor who subcontracts all or any part of a contract shall bear the liability of the subcontractor of that contract for the payment of compensation under this chapter to the employees of the subcontractor, unless the subcontractor has secured the payment of compensation as provided for in this chapter. Any contractor who shall become liable for compensation under this section may recover the amount of the compensation paid and necessary expenses from the subcontractor. ..."

The Contractor's attention is further called to RSA 266:72 which reads in part:

266:72 Spillage of Material.

I. No vehicle shall be driven or moved on any way unless such vehicle is so constructed or loaded as to prevent any of its load from dropping, sifting, leaking or otherwise escaping therefrom, except that sand may be dropped for the purpose of securing traction, or water or other substance may be sprinkled on a way in cleaning or maintaining such way.

II. No person shall operate on any way any vehicle with any load unless said load and any covering thereon is securely fastened so as to prevent said covering or load from becoming loose, detached or in any manner a hazard to other users of the way. Without limiting the foregoing provision, no person shall drive on any way any open vehicle loaded with earth, sand, asphalt, stone, gravel or other particulate substance unless said vehicle is equipped with and said load is covered and secured by a close-fitting tarpaulin or similar covering which. prevents the escape of any substance from said load onto the way.

III. Any person who violates the provision of this section shall be guilty of a violation if a natural person, or guilty of a misdemeanor if any other person. Any person shall be liable to the state or town for any damage done to the way by spillage. IV. The provisions of paragraphs I, II, II-a, and III of this section shall not apply to a local farmer transporting his own farm products or materials incidental to his farming operations where such transporting requires incidental use of a way provided that such farmer shall not thereby be relieved of his duty to exercise reasonable care in . carrying on such operations. V. The provisions of paragraph II and II-a shall not apply to: ,

(a) The operation of highway building equipment as defined in RSA 259:42 .and motor vehicles used in the construction of highways provided that such equipment or motor vehicle is used within a highway construction zone as prescribed by .the commissioner, public works and highways, provided that the driver of any such vehicle shall not thereby be relieved of his duty to exercise reasonable care;
(b) The operation of municipal and state highway maintenance equipment;
(c) The driving of any vehicle on a way at speeds of less than 30 miles per hour." (50 km/h)

Projects in the State are within watersheds under the jurisdiction of the New Hampshire Department of Environmental Services, Water Supply and Pollution Control Division .

Applicable regulations of said Division require the Contractor to take extraordinary and sufficient precautions to prevent the runoff of fuels, oils, bitumens, calcium chloride or other polluting materials harmful to humans, fish or other life, into the water supplies and surface waters of the State.

Unless otherwise permitted by the New Hampshire Department of Environmental Services, Water Supply and Pollution Control Division, control measures, in the absence of other locally established limitations, must be adequate to assure that turbidity in the receiving water due to the runoff of silt and clay will not be increased to more than ten (10) nephelometric turbidity units (n.t.u.) in waters used for public water supply or used for spawning and nursery of trout, salmon or other game or forage fish. Unless permitted by the Division, in surface waters used for other purposes, turbidity must not exceed 25 n.t.u. or the normal for the conditions prevailing, if the conditions prevailing exceed 25 n.t.u.

Proper planning and scheduling of construction operations are major factors in controlling erosion. Construction of drainage facilities and performance of other contract work which will contribute to the control of erosion and sedimentation shall be carried out concurrently with earthwork operations or as soon thereafter as practicable. Where there is a high potential for erosion and subsequent water pollution, the duration of the exposure of the uncompleted construction to the elements shall be kept to a minimum. Fine material placed or exposed during the work shall be so handled and treated as to minimize the possibility of its reaching any stream or water supply. Diversion channels, dikes, sediment traps and any other effective measures may be used. Where applicable and unless otherwise permitted where an alternate procedure would be mutually acceptable, before water shall be allowed to run into any ditch or channel, the waterway shall be prepared with permanent erosion control measures so that the waterway will be safe against erosion. Prior to beginning the work, the Contractor shall submit a schedule of operations indicating the special precautions which are proposed to control erosion.

Special precautions shall be taken in the use of construction equipment to minimize erosion. Wheel tracks shall not be left where erosion might begin. Wherever crossing of live streams is necessary, temporary culverts or bridges shall be constructed to allow equipment to cross. Fording of streams shall not be permitted unless approved by the Engineer. Disturbance of lands and waters that are outside the limits of the construction as staked will be prohibited except as may be found necessary and ordered.

All waterways shall be cleared as soon as practicable of falsework, piling, debris or other obstructions placed during construction operations and not a part of the finished work.

Prior to suspension of construction operations for appreciable lengths of time, the Contractor shall shape the earthwork in a manner that will permit storm runoff with a minimum of erosion. Temporary erosion and sediment control measures such as berms, dikes, slope drains or sedimentation basins shall be provided and maintained until permanent drainage facilities and erosion control features have been completed and are operative.

The Contractor's attention is called to RSA 149:8-a Dredging, which states:

In order to prevent the dissemination of destructive insects which may be harbored by materials such as plants, soils and construction equipment, it is required that such articles will be moved in compliance with all Federal and State regulations which govern the movement of regulated articles from those areas under quarantine.

Complete information may be secured from State and Federal Plant Pest Control Officials.

The Contractor shall also protect the atmosphere from particulate and gaseous pollutants in conformance with regulations promulgated by the New Hampshire Department of Environmental Services, Division of Air Resources.

The Contractor's attention is called to New Hampshire Code of Administrative Rules: CHAPTER Air 1000 Prevention, Abatement and Control of Open Source Air Pollution; Part Air 1001, Open Burning which reads in part;

”1001.03 Agency Authorization for Certain Open Burning.

(1) Commercial burning of brush, slash, tree cuttings, not over five inches in diameter where no other suitable method such as chipping can be utilized. This includes, but is not limited to, land clearing for developments, rights-of- ways, roads, etc.;

(2) Burning of combustible construction material resulting from the demolition of buildings, originating from within the state, providing such burning is done in a specified area approved by the agency and state and local fire officials;

The Division of Air Resources may order unauthorized burning to cease and may order authorized burning creating a nuisance to cease. The order may be issued directly to the Contractor or to the Contractor through the Engineer.”

106.02 Permits, Licenses and Taxes.

The Contractor shall procure all permits and licenses, pay all charges, fees and taxes and give all notices necessary and incidental to the due and lawful prosecution of the work.

The attention of the Bidder is called to RSA 293A, Business Corporations, which, among other provisions, requires the payment of a fee for the record of organization and an annual renewal fee; to RSA 305-A, Registration of Foreign Partnerships, which, among other provisions, requires that every foreign partnership desiring to do business in this State shall pay a registration fee and an annual maintenance fee; and to RSA 349, Trade Names, which, among other provisions, requires, with certain exceptions, that every sole proprietor doing business in this State shall register the trade name of such business and

that every person, proprietorship, partnership or association as defined above, engaged in the conduct of any business, enterprise, venture or activity within the State under a trade name, firm or style shall, subject to limitations, file in the office of the Secretary of State a certificate signed and sworn to by such person or proprietorship or by members of such partnership or association stating the name under which the business is to be conducted, the principal place of said business, and a brief description of the kind of business to be carried on, with the names and addresses of the principal parties engaged therein. Said registration shall further state the date of organization of said business and any limitation of time after which said business shall be no longer conducted. A recording fee, good for 10 years, is required for the above registration and issuance of a certificate.

The above fees are payable to the Secretary of State, who upon request, will supply further information and the required forms.

Bidders with the word "Engineer" or any form of such word in the name of their business should review RSA 319- A:20.

The Contractor's attention is further called to RSA 80:7, RSA 80:7a, RSA 80:7b and RSA 80:7c which read:

"80:7 Contractors' Taxes. Whenever any person, firm or corporation enters into a contract or agreement with the state or any political subdivision thereof, it shall be a term or condition of such contract that the state or such political subdivision shall withhold or retain from the contract price provided for in such contract such sum or sums as will secure the payment of the taxes levied and assessed against the property of such contractor or against the property for which such contractor may be liable for the payment of taxes thereon, until such taxes are paid by such contractor, or are authorized paid by him from the sums so withheld, provided the collector of taxes or other person responsible for the collection of such taxes notifies the treasurer as aforesaid until the expiration of a period of ten days after the collector or other person responsible for the collection of the taxes has presented or set by first class mail, postage prepaid, addressed to the last known address of such contractor a tax bill, or a duplicate or copy of the tax bill presented or sent to a subcontractor or lessee for the payment of whose taxes said contractor is liable together with a notation to said contractor stating therein a date certain when said collector or other person responsible for the collection of such taxes will notify the treasurer as aforesaid. If the taxes so assessed are not paid by the person, firm or corporation liable therefore by December first of the year of assessment, the treasurer, upon notice from the collector of taxes that the taxes remain unpaid, shall pay over the amounts withheld to the collector and take his receipt therefore which shall be full and complete discharge of the treasurer from any further liability for the sum so withheld. If, on December first, the firm or corporation is not entitled to sufficient sums under the contract from which the treasurer can withhold the amount of taxes due, the treasurer as

soon thereafter as sufficient sums are available for the purpose shall immediately pay over to the collector the sums so withheld. If the person, firm or corporation shall pay to the collector the taxes for which he or it is liable after notice to withhold by the collector to the treasurer, the collector shall immediately notify the treasurer so withholding, and the sum so withheld shall be paid to the person, firm or corporation, if otherwise due.

"80:7-a Subcontractors' Taxes. Whenever a person, firm or corporation enters into a contract or agreement with the state or any political subdivision thereof and such contractor employs a subcontractor to perform any of the work contemplated by such contract or agreement, it shall be a stated term or condition of such contract, that said contractor will be liable for the payment of any taxes assessed in the name of and upon the property of the subcontractor, used by said subcontractor in the performance of said sub-contract if assessed while said contract is being performed, to the extent of any sum or sums that may be due from the contractor has been notified by the collector of taxes in writing that payment of said taxes has been demanded of said subcontractor but said subcontractor has failed, neglected or refused to pay the same. Said contractor may retain from the contract price the amount for which he is liable hereunder. The amount of the taxes for which the said contractor may be liable hereunder may be withheld or retained from the contract price under the provisions of RSA 80:7.

"80:7-b User's Taxes. Whenever a person, firm or corporation enters into a contract agreement with the state or any political subdivision thereof and such contractor has in his possession and uses any taxable property owned by another upon the job to be performed under the contract or agreement, it shall be a stated term or condition of such contract that the contractor having such property in his possession shall be liable for the amount of taxes assessed against such property in the name of the owner of such property while the same is in the possession of such contractor to the extent of the amount of any sum or sums of money that may be due from said contractor to the owner of such property for rental or hire thereof at the time or after the collector of taxes has notified said contractor in writing that he has made demand upon the owner of such property for payment of the taxes assessed upon said property but that the owner of such property has failed, neglected or refused to pays said taxes. Said contractor may retain from the sums to be paid for the use of such property the amount for which he is liable hereunder. The amount of the taxes for which the said contractor may be liable hereunder may be withheld or retained from the contract price under the provisions of RSA 80:7.

"80:7-c Exemption from Attachment. The sums so withheld by the treasurer of the state or any political subdivision thereof upon notice from a collector of taxes under the provisions of RSA 80:7 and the sums so withheld and to be withheld by any contractor under the provisions of 80:7-a and 80:7-b shall be exempt from attachment, garnishment and trustee process by any person except in an action or suit brought by the collector of taxes to collect such taxes."

106.03 Patented Devices, Materials and Processes.

If the Contractor employs any design, device, material or process covered by letters of patent or copyright, the Contractor shall provide for such use by suitable legal agreement with the patentee or owner. The Contractor and the Surety shall indemnify and save harmless the City or any affected third party, from any and all claims for infringement by reason of the use of any such patented design, device, material or process, or any trademark or copyright and shall indemnify the City for any costs, expenses and damages which it may be obligated to pay by reason of any infringement, at any time during the prosecution or after the completion of work.

106.04 Federal Participation.

When the United States government participates in the cost of the work covered by the contract, the work shall be under the supervision of the Department but subject to the inspection and approval of the proper officials of the United States government and the work shall be performed in accordance with the applicable Federal statutes, rules and regulations. Such participation shall in no sense make the Federal government a party to the contract and will in no way interfere with the rights of either party hereunder.

106.05 Sanitary, Health and Safety Provisions.

The Contractor shall provide and maintain in a neat, sanitary condition such accommodations for the use of its employees and Department representatives as may be necessary to comply with the requirements of the State and local Boards of Health, or of other bodies or tribunals having jurisdiction. Except as provided under 698, this work will be subsidiary.

Attention is directed to Federal, State and local laws, rules and regulations concerning safety and health standards. The Contractor's attention is directed to the following safety and health standards which apply to all contracts:

It is a condition of this contract, and shall be made a condition of each subcontract entered into pursuant to this contract, that the Contractor and any subcontractor shall not require any laborers or mechanics employed in performance of the contract to work in surroundings or under working conditions which are unsanitary, hazardous or dangerous to their health or safety as determined by the Occupational Safety and Health Administration, United States Department of Labor, which standards include by reference the established Federal safety and health regulations for construction.

The standards and regulations comprise Part 1910 and Part 1926 respectively of Title 29 of the Code of Federal Regulations and are set forth in the Federal Register. Subsequent to the date of this specification, in case any revisions in the Code of Federal Regulations are published, such revisions will be deemed to supersede the appropriate Part 1910 and Part 1926, and be effective as of the date set forth in the revised regulation.

The Contractor's attention is directed to the rock drilling regulations adopted by the New Hampshire State Department of Health and Human Services, Division of Public Health Services under authority of the provisions of RSA 147:2 (Supp.).

The Contractor shall also be aware of laws and regulations relating to hazardous materials which may be encountered during construction operations, either within project limits or at material sites off the project. The health and safety of employees, the general public and the potential of damage to the overall environment is possible if hazardous materials are not recognized, reported and the appropriate action taken to dispose of, remove from the site or otherwise contain the possible contaminants.

State laws such as Chapters 141-E, Asbestos Management and Control, 147-A, Hazardous Waste Management, and 149-M, Solid Waste Management identify the major areas of concern. Regulations developed by the Department of Environmental Services, He-P-1905 and He-P-1901, identify and list the various contaminants related to hazardous waste and solid waste respectively.

In protecting employees from hazardous or toxic exposure, Chapter 277-A, Toxic Substances In The Workplace, states that the substances in the workplace and 277-A:5, in part, states that the employers shall inform employees as to possible contact with toxic materials and conduct education and training programs.

Exposure to hazardous materials may result from contact with, but not necessarily limited to, such items as drums, barrels, other containers, waste such as cars, batteries and building construction debris. Containers leaking unknown chemicals or liquids, abandoned cars leaking petroleum products, batteries leaking acid, construction debris which may include asbestos or any other source of suspected hazardous material found within excavation areas or stockpiled on land within construction limits shall be referred to the Department of Environmental Services so that a proper identification of the materials may be made and disposal procedures initiated as required.

The Contractor alone shall be responsible for the safety, efficiency and adequacy of his plant, appliances and methods and for any damage which may result from their failure or their improper construction, maintenance or operation.

The Contractor shall designate a Safety Officer whose duty shall be to monitor the project on a daily basis in order to insure that all safety measures alluded to in the contract are strictly adhered to. Special attention shall be paid to maintaining existing guide, regulatory and warning signs affecting the movement of traffic.

106.06 Public Convenience and Safety.

The Contractor shall at all times so conduct his work as to assure the least possible interference with private businesses and public travel. He shall, at his own expense, wherever necessary or required, maintain fences, furnish watchmen, maintain lights and

take such other precautions as may be necessary to protect life and property. The safety and convenience of the general public and the residents in and around the project shall be provided for by the Contractor as specified under 103.04 and 619. The Contractor shall be responsible for proper and timely notification to residents prior to any interruptions of their access or services.

Fire hydrants on or adjacent to the project shall be kept accessible to the fire apparatus at all times and no obstructions shall be placed within 10 feet of any such facility. No sidewalks, gutters, drainage inlets or portions of streets adjoining the project under construction shall be obstructed more than is necessary. The existing street surface shall be maintained satisfactorily with suitable patching material when ordered.

In the event that all or part of any street is officially closed to traffic during construction, the Contractor shall provide and maintain safe and adequate traffic accommodations for residences and businesses along and adjacent to the street so closed.

The Contractor shall provide all safeguards, safety devices and protective equipment and take any other actions necessary to insure the protection of the life and health of the public.

Except for work done under items in the contract, work prescribed herein will not be paid for separately but will be considered as subsidiary.

106.07 Railway-Highway Provisions.

All work to be performed by the Contractor on the railroad right-of-way shall be performed at such times and in such manner as not to unnecessarily interfere with the movement of trains or traffic upon the track of the railway company. The Contractor shall use all care and precaution in order to avoid accidents, damage or unnecessary delay or interference with the railway company's trains or other property.

The Contractor shall secure from the railroad flagging service for the protection of railroad traffic during the progress of work by the Contractor on, over, under or adjacent to the tracks of the railroad. The Contractor shall reimburse the railroad for the expense of such service.

If the railroad grants the Contractor's request for any temporary crossing, the Contractor shall assume the cost of installing, maintaining, removing and protecting such temporary crossing. The type and method of protection of the crossing and the insurance required shall be as determined by the railroad.

106.08 Construction Over or Adjacent to Navigable Waters.

All work over, on or adjacent to navigable waters shall be so conducted that free navigation of the waterways will not be interfered with and that the existing navigable

depths will not be impaired except as allowed by a permit issued by the U.S. Coast Guard and/or the U.S. Army Corps of Engineers, as applicable.

106.09 Barricades and Warning Signs.

The Contractor shall provide, erect and maintain all necessary barricades, suitable and sufficient lights, danger signals, signs and other traffic control devices and shall take all necessary precautions for the protection of the work and safety of the public. Streets closed to traffic shall be protected by effective barricades. Obstructions shall be illuminated during hours of darkness. Suitable warning signs shall be provided to control and direct traffic in a proper manner.

The Contractor shall erect warning signs in advance of any place on the project where his operation may interfere with the use of a street by traffic and at all intermediate points where the new work crosses or coincides with an existing street. Warning signs shall be placed and maintained in accordance with the plans and/or the Manual on Traffic Control Devices

The Contractor will be held responsible for all damage to the work from traffic, pedestrians, animals or any other cause due to lack of adequate signs or barricades.

All barricades, warning signs, lights, temporary signals and other protective devices shall conform with the Traffic Manual as defined in 101.01.

Except for work done under 619, the work prescribed herein will not be paid for separately but will be considered as subsidiary.

106.10 Use of Explosives.

The storage, handling, transportation and use of explosives shall conform with all Federal, State and local laws and regulations, including the rules and regulations of the Director of State Police and the provisions below.

The Contractor's attention is called to RSA 158:9-a (Supp.), which in part provides that licenses must be obtained from the Director of State Police in order (1) to use, purchase or transport explosives or (2) to store explosives.

When the use of explosives is necessary for the prosecution of the work, the Contractor shall exercise the utmost care not to endanger the life or property, including new work. The Contractor will be responsible for all damage resulting from the use of explosives.

The Contractor shall notify each property owner and public utility company having structures in proximity to the site of the work of his intention to use explosives. Such

notice shall be given sufficiently in advance to enable the parties to take such steps as they may deem necessary to protect their property from injury.

Explosives shall be used only during daylight hours, shall be handled only by competent workmen and particular care shall be taken to insure that no unexploded charges remain in the work.

All persons within the danger zone of blasting operations shall be warned and no blasting shall be done until the zone has been cleared. Sufficient flaggers shall be stationed outside the danger zone to stop all approaching traffic during blasting operations.

106.11 Protection and Restoration of Property and Landscape.

The Contractor shall use every precaution to prevent injury or damage to wires, poles or other property of public utilities; trees, shrubbery, crops and fences along and adjacent to the right-of-way; all underground structures such as pipes and conduits, within or without the right-of-way; all pavement markings which may be placed upon the new pavement; all signs authorized or erected by the Traffic Department; and to protect and carefully preserve all property markers until an authorized agent has witnessed or otherwise referenced their location.

The Contractor shall be responsible for all damage or injury to property of any nature during the prosecution of the work resulting from any act, omission, neglect or misconduct in the manner or method of executing the work or at any time due to defective work or materials and said responsibility will not be released until the project has been completed and accepted.

When or where any direct or indirect damage or injury is done to public or private property by or on account of any act, omission, neglect or misconduct in the execution of the work or in consequence of the nonexecution thereof, the Contractor shall restore, without compensation, such property to a condition similar or equal to that existing before such damage or injury was done, by repairing, rebuilding or otherwise restoring as may be directed or shall make good such damage or injury in an acceptable manner.

If the Contractor fails to repair, rebuild or otherwise restore such property as may be deemed necessary, the Engineer, after 48 hours notice, may proceed to do so and the cost thereof will be deducted from any money due or which may become due the Contractor under the contract.

When the Contractor's operations encounter remains of prehistoric people's dwelling sites or artifacts of historical or archaeological significance, operations shall be discontinued until a proper investigation can be made. When directed, the Contractor shall excavate the site in such a manner as to preserve the objects encountered and shall remove them for delivery to the custody of the proper State authorities. Such excavation will be considered and paid for as extra work.

106.12 Responsibility for Damage Claims.

The Contractor shall assume the defense of all claims whatsoever character against the Contractor or the City and shall indemnify and save harmless the City and all of its officers, agents and employees from all suits, actions or claims of any character, name and description brought for , or on account of any injuries or damages received or sustained by any person, persons or property by or from the said Contractor or any subcontractors used on the project or by or in consequence of any neglect in safeguarding the work, or through the use of unacceptable materials in constructing the project or by or on account of any act or omission, neglect or misconduct of the said Contractor or any subcontractors, or by or on account of any claims or amounts recovered for any infringement of patent, trademark or copyright, or from any claims or amount arising or recovered under the "Workmen's Compensation Law," or any other law, the said Contractor under any by virtue of this contract, as shall be considered necessary by the Commissioner, may be retained for the use of the City, or in case no money is due, his Surety shall be held until such suit or suits, action or actions, of claim or claims for injuries or damages, as aforesaid, shall have been settled and suitable evidence to that effect furnished to the Director except that money due the Contractor will not be withheld when the Contractor produces evidence satisfactory to the Director that the Contractor and all subcontractors are protected by and will maintain adequate public liability and property damage insurance or bond for the payment of any judgement in such suits, actions or claims.

106.13 Indemnification and Insurance Requirements.

In consideration of the utilization of the Contractor's services by the City of Manchester and other valuable consideration, the receipt of which is hereby acknowledged, the Contractor agrees that all persons furnished by the Contractor shall be considered the Contractor's employees or agents and that the Contractor shall be responsible for payment of all unemployment, social security and other payroll taxes including contributions from them when required by law.

A. The Contractor hereby agrees to protect, defend, indemnify and hold the City of Manchester and its employees, agents, officers and servants free and harmless from any and all losses, claims, liens, demands and causes of action of every kind and character including but no limited to, the amounts of judgements, penalties, interests, court costs, legal fees and all other expenses incurred by the City arising in favor of any party including claims, liens, debts, personal injuries including injuries sustained by employees of the City, deat or damages to property (including property of the City) and without limitation by enumeration, all other claims or demands of every character occurring or in any way incident to, in connection with or arising directly or indirectly out of this Contractor Agreement. The Contractor agrees to investigate, handle, respond to, provide defense for and defend any such claims, demands or suits at the sole expense of the

Contractor. The Contractor also agrees to bear all other costs and expenses related thereto, even if the claim or claims alleged are groundless, false or fraudulent.
This provision is not intended to create any cause of action in favor of any third party against Contractor or the City or to enlarge in any way the Contractor's liability but is intended solely to provide for indemnification of the City from liability for damages or injuries to third persons or property arising from Contractor's performance hereunder.

B. The Contractor agrees to maintain in full force and effect:

1. Comprehensive General Liability insurance written on occurrence form, including completed operations coverage, personal injury liability coverage, broad form property damage liability coverage, "xcu" coverage and contractual liability coverage insuring the agreements contained herein. The minimum limits of liability carried on such insurance shall be $1,000,000 each occurrence and where applicable in the aggregate combined single limit for bodily injury and property damage liability; $1,000,000 annual aggregate personal injury liability.

When explosives are to be used in the prosecution of the work, the insurance required shall also contain provisions for protection against damage claims due to such use of explosives and the certificate shall attest to this fact.

2. Automobile liability insurance for owned, non-owned and hired vehicles. The minimum limit of liability carried on such insurance shall be $1,000,000 each accident, combined single limit for bodily injury and property damage.

3. Worker's Compensation insurance whether or not required by the NH Revised Statutes Annotated, 1955, as amended, with statutory coverage and including employer's liability insurance with limits of liability of at least $100,000 for each accidental injury and with respect to bodily injury by disease, $100,000 each employee and $500,000 per policy year.

C. Any and all deductibles on the above described insurance policies shall be assumed by and be for the account of, and at the sole risk of the Contractor.

D. Insurance companies utilized must be admitted to do business in N.H. or be on the Insurance Commissioner's list of approved non-admitted companies and shall have a rating of (A) or better in the current edition of Best's Key Rating Guide.

E. The Contractor agrees to furnish certificate(s) of the above mentioned insurance to the City of Manchester within fourteen (14) days from the date of this agreement and, with respect to the renewals of the current insurance policies, at least thirty (30) days in advance of each renewal date. Such certificates with respect to comprehensive general liability and auto liability insurance, name the CITY OF MANCHESTER AND THE DEPARTMENT OF HIGHWAYS as an additional insured and with respect to all policies shall state that in the event of cancellation or material change, written notice

shall be given to the City of Manchester, Office of Risk Management, One City Hall Plaza, Manchester, New Hampshire 03101 at least thirty (30) days in advance of such cancellation or change.

F. The purchase of the insurance required or the furnishing of the aforesaid certificate shall not be a satisfaction of the contractor's liability hereunder or in any way modify the Contractor's indemnification responsibilities to the City of Manchester and the Department of Highways.

G. It shall be the responsibility of the Contractor to ensure that all subcontractors comply with the same insurance requirements that he is required to meet.

H. Railroad Protective Insurance (as necessary and subject to Special Provisions). The Contractor shall take out insurance coverage known as "Railroad Protective Insurance", in the name of the Railroad(s) in amounts and in a form as required and approved by the Railroad(s) involved. The original policies of such insurance, shall be furnished to the Railroad(s) involved and certificates furnished to the City.

106.14 Use and Occupancy Prior to Acceptance by City.

The Contractor agrees to the use and occupancy of a portion of the project before formal acceptance by the City, provided the City:

A. Secures written consent of the Contractor except in the event, in the opinion of the Engineer, the Contractor is chargeable with unwarranted delay in completing the contract requirements;

B. Secures consent of the Surety; and

C. Secures endorsement from the insurance carrier(s) permitting use of the project during the remaining period of construction.

106.15 Contractor's Responsibility for Work.

Until final written acceptance of the project by the Engineer, the Contractor shall have the charge and care thereof and shall take every precaution against the injury or damage to any part thereof by the action of the elements or from any other cause, whether arising from the execution or from the nonexecution of the work. The Contractor shall rebuild, repair, restore and make good all losses, injuries or damages to any portion of the work occasioned by any of the above causes before final acceptance and shall bear the expense thereof except loss, injury or damage to the work due to unforeseeable causes beyond the control and without the fault or negligence of the Contractor, including but not restricted to natural disasters such as earthquake, tidal wave, tornado, hurricane or other cataclysmic phenomenon of nature. The repair of such excepted damage shall be done by

the Contractor and paid for at the contract prices or by extra work as determined and ordered by the Engineer.

In case of suspension of the work, except as provided in 619, the Contractor shall be responsible for the work under the contract and shall take such precautions as may be necessary to prevent damage to the project, provide for normal drainage and shall erect any necessary temporary structures, signs or other facilities at his expense. During such period of suspension of work, the Contractor shall properly and continuously maintain in an acceptable growing condition all living material in newly established plantings, seedings and soddings furnished under the contract and shall take adequate precautions to protect new tree growth and other important vegetative growth against injury.

The Contractor shall not be relieved of his responsibility by any right of the Engineer to give permission relating to any part of the work or by any such permission given or by failure of the Engineer to give such permission.

106.16 Contractor's Responsibility for Utility Property and Services.

It shall be the Contractor's responsibility to ascertain the existence of any underground improvements or facilities which may be subject to damage by reason of his operations. The fact that any underground facility is not shown upon the plans shall not relieve the Contractor of his responsibility under this Section.

At points where the Contractor's operations are adjacent to properties of railway, telegraph, telephone and power companies, or are adjacent to other property, damage to which might result in considerable expense, loss or inconvenience, work shall not be commenced until all arrangements necessary for the protection thereof have been made.

Prior to doing work that might damage underground facilities or interfere with their service, the Contractor shall take steps to have the owners verify the locations shown on the plans and identify such facilities in the field. He shall cooperate with the owners to arrange that stakes or other markings set by the owners will be set so that maintenance of such points may be possible as long as necessary. The Contractor shall maintain such references and will be responsible for damage to any underground facility if the owner has properly located it. The Contractor shall maintain access to the installations in order to permit maintenance of services or permit repairs in case of interruptions of service. See 104.06.

The Contractor shall cooperate with the owners of any underground or overhead utility in their removal and rearrangement operations in order that these operations may progress in a reasonable manner, that duplication of rearrangement work may be reduced to a minimum and that services rendered by those parties will not be unnecessarily interrupted.

In the event of interruption to utility services as a result of accidental breakage or as a result of being exposed or unsupported, the Contractor shall promptly notify the proper authority and shall cooperate with the said authority in the restoration of service until the service is restored. No work shall be undertaken around fire hydrants until provisions for continued service have been approved by the local fire authority.

Full compensation for furnishing all labor, materials, tools, equipment and incidentals, and for doing all the work involved in protecting or repairing property as specified above and in 104.06, shall be considered as included in the prices paid for the various contract items of work and no additional compensation will be allowed therefor.

Should the Contractor desire to have any rearrangement made in any utility facility, or other improvement, for his convenience in order to facilitate his construction operations, which rearrangement is in addition to, or different from, the rearrangements indicated on the plans or in the special provisions, he shall make whatever arrangements are necessary with the owners of such utility or other non-highway facility for such rearrangement and bear all expenses in connection therewith.

106.17 Personal Liability of Public Officials.

In carrying out any of the provisions of these specifications, or in exercising any power of authority granted to them by or within the scope of the contract, there shall be no liability upon the Director, Engineer or authorized representatives, either personally or as officials of the City, it is being understood that in all such matters they act solely as agents and representatives of the Department.

106.18 No Waiver of Legal Rights.

Upon completion of the work, the Department will expeditiously make final inspection and notify the Contractor of acceptance. Such final acceptance, however, shall not preclude or stop the Department from correcting any measurement, estimate or certificate made before or after completion of the work, nor shall the Department be precluded or stopped from recovering from the Contractor or his Surety, or both, such overpayment as it may sustain by failure on the part of the Contractor to fulfill his obligations under the contract. A waiver on part of the Department of any breach of any part of the contract shall not be held to be a waiver of any other or subsequent breach.

The Contractor without prejudice to the terms of the contract, shall be liable to the Department for latent defects, fraud or such gross mistakes as may amount to fraud, and as regards the Department's rights under any warranty or guaranty.

106.19 Environmental Protection.

The Contractor shall comply with all Federal, State and local laws and regulations controlling pollution of the environment. He shall take necessary precautions to prevent pollution of streams, lakes, ponds and reservoirs with fuels, oils, bitumens, chemicals or other harmful materials and to prevent pollution of the atmosphere from particulate and gaseous matter. Detail requirements implementing this policy appear elsewhere in these specifications or on plan documents of the contract.

106.20 No Third Party Beneficiary.

It is specifically agreed between the parties executing this contract that it is not intended by any of the provisions of any part of the contract to create the public or any member thereof a third party beneficiary hereunder, or to authorize anyone not a party to this contract to maintain a suit for personal injuries or property damage pursuant to the terms or provisions of this contract. The duties, obligations and responsibilities of the parties to this contract with respect to third parties shall remain as imposed by law.

106.21 Civil Rights.

The Contractor's attention is directed to Federal, State and local laws, rules and regulations which set forth unlawful employment practices including that of discrimination because of race, religion, color, sex or national origin and which define actions required for Affirmative Action and Minority Business programs.

The Contractor shall take affirmative action to insure that residents of the City of Manchester are given maximum opportunity for employment and that business concerns located in, or owned in substantial part by, residents of the City of Manchester are to the greatest extent feasible, awarded contracts.

The City may request, in which case the Contractor shall provide, such information as the City shall determine is necessary to ascertain the Contractor's conformance with the provisions of this section.

106.22 Assignment Provision.

The Contractor hereby agrees that it will assign to the City all causes of action that it may acquire under the antitrust laws of New Hampshire and the United States as the result of conspiracies, combinations or contracts in restraint of trade which affect the price of goods or services obtained by the City under this contract if so requested by the City.

SECTION 107 -- PROSECUTION AND PROGRESS

107.01 Subletting of Contract.

The Contractor shall give his personal attention constantly to the faithful prosecution of the work, shall keep the same under his personal control and shall not assign by power of attorney or otherwise, nor sublet the work, or any part thereof, without written consent of the City and shall not either legally or equitably assign any of the monies payable under this agreement, or his claim thereto, unless by and with the like consent of the City and surety on the Bond.

No subcontracts or transfer of contract shall relieve the Contractor, bonding company or surety of liability under the contract and bonds.

The Contractor shall agree that all contracts with subcontractors and/or lower tier subcontractors will be in writing.

If, during the course of the work, a subcontractor fails to complete or perform satisfactory work, the Contractor shall be required to complete the work with or without another approved subcontractor. The Contractor shall not substitute another subcontractor for an approved subcontractor except for reasons acceptable to the Department nor shall an approved subcontractor be allowed to perform work not prescribed in the executed agreement on file without prior consent by the Department.

All work which is performed by subcontract shall, nevertheless, remain the responsibility of the Contractor and shall be included in the Unit Bid Prices.

The Contractor shall, before commencing work, provide the Engineer with a list of subcontractor's names along with copies of the subcontract agreements outlining the limits of their work.

No correspondence will be accepted by the Engineer or City from any subcontractor. The Contractor will retain sole responsibility for management and discharge of the contract.

Shop drawings, samples and all similar submittals originating with a subcontractor shall be reviewed by the Contractor before submission to the Engineer and shall bear his stamp of approval.

The Contractor will make no covenants with his subcontractors which, in any way, alter the requirements of the contract.

Should the Engineer discover a subcontractor to be incompetent or in any way in violation with the terms of the contract, he will so notify the Contractor in writing and the Contractor shall take immediate steps to rectify the problem, even to the extent of terminating this subcontract.

107.02 Notice to Proceed.

The Notice to Proceed will stipulate the date on which it is expected the Contractor will begin the construction and from which date contract time will be charged. Commencement of work by the Contractor, prior to the Notice to Proceed, shall constitute the beginning of construction and the date from which contract time will be charged.

107.03 Prosecution and Progress.

The Contractor shall provide sufficient materials, equipment and labor to guarantee completion of the project in accordance with the plans and specifications within the time set forth in the contract. Prior to the pre-construction conference and at least 3 working days prior to initiating operations on the project, the Contractor shall furnish the Engineer a progress schedule, a written erosion control schedule and a traffic control plan for approval.

The progress schedule will be used to indicate the proposed sequence of major construction operations and to check the actual progress of work. The progress schedule shall provide sufficient detail to assure the completion of the project in accordance with the plans and specifications within the time set forth in the contract. If the Contractor falls significantly behind the approved schedule, the Contractor shall submit for approval a revised schedule for completion of the work within the contract time and modify the operations to provide such additional materials, equipment and labor necessary to meet the revised schedule. Should the prosecution of the work be discontinued for any reason, the Contractor shall notify the Engineer at least 48 hours in advance of resuming operations.

The erosion control schedule shall detail the methods planned for accomplishment of temporary and permanent erosion control work for operations including, but not limited to, clearing, grubbing, grading, drainage and bridge operations, especially in or adjacent to existing waters, water courses or wetlands. The erosion control schedule shall include proposed methods of erosion control on haul roads, borrow pits and disposal areas.

The traffic control plan shall include in detail the Contractor's plan for controlling traffic through the project and shall be in conformance with the Traffic Manual and other applicable standards. This plan shall include specific design details on lane closures, detours and temporary bridges. The plans shall also include the layout of signing, barricades and other warning devices, as well as the placement of flaggers and uniformed officers. If the Contractor does not submit a Traffic Control Plan for approval, it will be presumed that the Contractor plans to adhere to the Traffic Control Plan contained in the contract. Changes to the approved traffic control plan shall be submitted to the Engineer for review and approval at least 10 calendar days in advance of implementation of the change.

Prior to commencement of any major work on the project, a pre-construction conference shall be held to outline the proposed schedule and coordinate the work of the Contractor, various utilities and subcontractors. The Contractor shall be prepared to discuss in detail the proposed schedule, the erosion control plan and the traffic control plan particularly as these relate to coordination with schedules of the utilities and subcontractors. In addition, the Contractor shall be prepared to provide details on the sources and delivery of critical materials.

107.04 Limitation of Operations.

The Contractor shall conduct the work at all times in such a manner and in such sequence as will assure the least interference with traffic. He shall have due regard to the location of detours and to provisions for handling traffic. The Engineer may require the Contractor to finish a section on which work in progress before work is started on any additional sections if the opening of such section is essential to public convenience.

No work shall be performed on Sundays or legal holidays except in cases of emergency or upon permission of the Engineer. Whenever a holiday is observed on a Friday or a Monday, the Contractor may be required to suspend work for 3 calendar days. Prior to the close of work, the project shall be placed in the best condition possible for the comfort and safety of the traveling public, and definite arrangements shall be made for responsible personnel to maintain the project in the above condition throughout the period of suspension. No work will be permitted at night unless sufficient lighting is provided to insure the same degree of accuracy of workmanship and the same conditions regarding safety as would be obtained by daylight. Moreover, no work shall be done at night contrary to local ordinances.

107.05 Character of Employees.

The Contractor shall, at all times, employ sufficient labor, supervision and equipment for prosecuting the several classes of work to full completion in the manner and time required by the terms of the Contract. All of the Contractor's personnel shall have sufficient skill and experience to perform properly the work assigned to them. Employees engaged in special work or skilled work shall have sufficient experience in such work and in the operation of the equipment required to perform the work satisfactorily.

Any person employed by the Contractor or by any subcontractor who, in the opinion of the Engineer, does not perform the work in a proper and skillful manner or is disorderly shall, at the written request of the Engineer, be removed forthwith by the Contractor or subcontractor employing such person, and shall not be employed again in any portion of the work without approval.

Should the Contractor fail to remove such person or persons as required above, or fail to furnish suitable and sufficient personnel for the proper prosecution of the work, the Engineer may suspend the work by written notice until compliance with such orders.

107.06 Methods and Equipment.

All equipment which is proposed to be used on the work shall be of sufficient size and in such mechanical condition as to meet requirements of the work and to produce a satisfactory quality of work. Equipment used on any portion of the project shall be such that no injury to the Street, adjacent property, or other Streets, will result from its use.

If any equipment is not maintained in full working order or, as used by the Contractor, proves inadequate to obtain results prescribed, the Engineer may order said equipment to be improved or other equipment substituted or added.

When the methods and equipment to be used by the Contractor in accomplishing the construction are not prescribed in the contract, the Contractor is free to use any methods or equipment that will accomplish the contract work in conformity with the requirements of the contract.

Where practicable, spray applications of materials containing fertilizer, asphalt and other injurious substances which cause pitting or which impair the reflective and brightness values of metal shall precede the installation of susceptible roadside structures such as signs, sign supports and guardrail; otherwise, coverings shall be used to protect such structures installed prior to the spray applications.

When the contract specifies the use of certain methods and equipment, such methods and equipment shall be used unless others are authorized. If the Contractor desires to use a method or type of equipment other than that specified in the contract, the Contractor may request the authority from the Engineer to do so. The request shall be in writing and shall include a full description of the methods and equipment proposed to be used and the reasons for desiring to make the change. If approval is given, it will be on the condition that the Contractor will be fully responsible for producing construction work in conformity with contract requirements. If, after trial use of the substituted methods or equipment, the Engineer determines that the work produced does not meet contract requirements, the Contractor shall discontinue the use of the substitute method or equipment and shall complete the remaining work with the specified methods and equipment. the Contractor shall remove the deficient work and replace it with work of specified quality or take such corrective action as directed. No change will be made in basis of payment for the construction items involved nor in contract time as a result of authorizing a change in methods or equipment under these provisions.

Failure on the part of the Contractor to observe the necessary precautions to prevent damage to property or injury to public shall be sufficient grounds for suspension of the work.

107.07 Determination and Extension of Contract Time.

It is an essential part of the contract that the Contractor perform fully, entirely, and in an acceptable manner, the work under contract within the time stated in the contract.

It is likewise essential that those parts, phases or stages, as stipulated in the contract, for the purpose of benefiting the traveling public or for the coordination of work performed by others, shall be completed on the date indicated.

All computations of days for the purpose of adjusting the contract time shall begin on the date the Contractor starts construction operations but not later than the date set in the Notice to Proceed.

No allowances will be made for delays or suspensions of the work due to the fault of the Contractor.

Time stated in the contract will be one of the following: (a) calendar date or (b) working days.

(a) When the contract sets forth a calendar date as the date on or before which the work is to be completed, due consideration will have been given to the Saturdays, Sundays, legal holidays and the period between December 1 and April 1 inclusive in the anticipated period of construction. No extension of the contract completion date will be allowed due to such days. Consideration will be given for unfavorable weather and ground conditions on days other than the above days as follows: From the latest date for starting operations until the completion date as extended, for each day on which weather or ground conditions prevent the Contractor from effective prosecution of the operations which at that time control the progress of the work, an extension of a working day will be allowed after the time for completion. Working days will also be added when the final contract estimate is greater than the original contract estimate, computed as follows: The number of allowable working days will be in the same ratio to the number of days between the date of beginning of work and the contract completion date as revised above (not counting the period December 1 through April 1), as the final contract estimate is greater than the original contract estimate.

b) When the contract is on the basis of working days as defined in 101.01, the Contractor will be charged for the number of working days used. An increase of quantities will increase the number of allowable working days by the ratio of the final contract estimate to the original contact estimate.

Whether the contract time is (a) or (b) above, other considerations may be grounds for extension of time as follows: If the Contractor finds it impossible for reasons beyond his control to complete the work within the contract time as specified or as extended in accordance with the provisions herein, he may, at any time prior to the expiration of the contract time as extended, make a written request to the Engineer for an extension of time, setting forth therein the reasons which he believes will justify the granting of his

request. The Contractor's plea that insufficient time was specified is not a valid reason for extension of time. If the Engineer finds that the work was delayed because of conditions beyond the control and without the fault of the Contractor, including but not limited to natural disasters, delays or suspensions made necessary by an emergency episode procedure carried out under the direction of the New Hampshire Department of Environmental Services, Division of Air Resources, utility relocations, strikes, delays in the delivery of critical materials, right- of-way problems, work of added complexity, work ordered done at a late or unfavorable stage of construction and work requiring the use of specialists for whose starting time a reasonable latitude must be allowed, the Engineer may extend the time for completion in such amount as the conditions justify. "Unfavorable ground conditions" under (a) above may refer to surfaces too wet for normal travel, material encountered outside of workable moisture conditions, ground too wet or too cold to apply surface treatment or pavement and the like.

When an extension of the contract time is requested due to delays in the delivery of critical materials, sufficient documentary evidence must be furnished the Department at the time the delay occurs showing that such delay results from the materials being unavailable by reason of an unusual market condition such as an industrywide strike, natural disaster, or areawide shortage which arises after bids are taken and which prevents the procurement of materials within the allowable time of limitations. Delays due to slow delivery from a source of supply when the required material is available elsewhere will not be considered as justification for an extension of time.

The contract time may be increased due to an increase in quantities as specified in (a) or (b) above, if it can be definitely established that any required additional work is of such character or occurs so near the contract time of completion that more time is required to complete the work than is indicated by the proportionate money value.

In the event that the Engineer extends the contract time of completion into a period of the year during which the working conditions are less favorable, consideration will be given to further extension of time as influenced by the nature of the work involved.

When the contract stipulates a completion date that falls on a Saturday, Sunday or legal holiday, and when the time as extended by the Engineer falls on a date which is a Saturday, Sunday or legal holiday, the date will be extended to the next working day.

When the Engineer determines that the contract time should be extended, such extended time for completion shall then be in full force and effect the same as though it were the original time for completion.

When final acceptance has been duly made by the Engineer as prescribed in 105.15, the daily time charge will cease.

107.08 Failure to Complete on Time.

For each day, as specified, that any work shall remain uncompleted after the contract time specified for the completion of parts, phases, stages or the complete work, the sum of two hundred dollars ($200.00) per day for each calendar day (Sundays and Holidays excluded) of delay will be deducted from any money due the Contractor, not as a penalty, but as liquidated damages for each day of such delay, to be paid in full and subject to no deduction. If the payments due the Contractor are less than the amount of such liquidated damages, said damages shall be deducted from any other monies due or to become due the Contractor and in case such damages shall exceed the amount of all moneys due or to become due the Contractor, then the Contractor or his surety shall pay the balance to the City.

In the case of a date in the contract being given for the completion of parts, phases or stages, the liquidated damages will be deducted during the period in which the particular work specified is uncompleted.

Permitting the Contractor to continue and finish the work or any part of it after the time fixed for its completion may have been extended, will in no way operate as a waiver on the part of the Department of any of its rights under the contract.

The Engineer may waive such portions of the liquidated damages as may accrue after the work is in condition for safe and convenient use by the traveling public.

If the contract is not completed within the time specified and no extension of time is authorized by the Department, the Contractor shall indemnify the City for costs to the City of inspection of the work during any such extension period.

107.09 Default of Contract.

If the Contractor:

(a) Fails to begin the work under the contract within the time specified in the Notice to Proceed, or

(b) Fails to perform the work with sufficient workers and equipment or with sufficient materials to assure the prompt completion of said work, or

(c) Fails to perform the work in accordance with the contract requirements or refuses to remove and replace rejected materials or unacceptable work, or

(d) Discontinues the prosecution of the work, or

(e) Fails to resume work which has been discontinued, within a reasonable time after notice to do so, or

(f) Becomes insolvent or is declared bankrupt, or commits any act of bankruptcy or insolvency, or

(g) Makes an assignment for the benefit of creditor, or

(h) Fails to comply with contract requirements regarding minimum wage payments or EEO requirements, or

(i) Is a party to fraud, the Engineer will give notice in writing to the Contractor and his Surety of such delay, neglect or default.

If the Contractor or Surety, within 10 calendar days after such notice, does not proceed in accordance with the notice, then the Director will, upon written notification from the Engineer of the Contractor's failure to comply with such notice, have full power and authority without violating the contract, to take the prosecution of the work out of the hands of the Contractor. The Department may enter into an agreement for the completion of said contract according to the terms and provisions thereof, or use such other methods as will be required for the completion of said contract in an acceptable manner.

All extra costs and charges incurred by the Department as a result of such delay, neglect or default, together with the cost of completing the work under contract, will be deducted from any monies due or which may become due said Contractor. If such expense exceeds the sum which would have been payable under the contract, then the Contractor and the Surety shall be liable and shall pay to the Department the amount of excess.

107.10 Termination of Contractor's Responsibility.

Whenever the improvement provided for by the contract shall have been completely performed on the part of the Contractor and all parts of the work have been approved and accepted, the Contractor shall then be released from further obligations except as set forth in his bond and as provided in 107.19.

107.11 Guaranty.

The Contractor guarantees that the work to be done under this contract, and the materials to be furnished by him for use in the construction of the same, will be free from defects or flaws. This guaranty shall be for a period of one year from and after the date of acceptance.

It is hereby, however, specially agreed and understood that this guaranty shall not include any repairs made necessary by any cause or causes other than defective work or materials furnished by the Contractor. The Contractor shall at all times within said period of guaranty keep the surface of the ground over this work, or adjacent thereto, in the position and condition required by this contract, and refill any settlement or erosion in the

backfilling or any surface graded by him, due to any cause whatsoever, when so directed by the Engineer. Should he fail to do so, the Owner may have said work done as described in 105.15

107.12 Understanding of Parties Regarding Department's Performance.

It is understood and agreed by the parties to the contract that all obligations of the Department hereunder, including the continuance of payments, are contingent upon the appropriation and continued availability of funds, and in no event shall the Department be liable for any payments
hereunder in excess of such appropriation and available funds. In the event the Board of Mayor and Aldermen orders the reduction of expenditures of funds and the Board of Mayor and Aldermen fails to encumber funds or reduces or terminates the expenditure of anticipated funds or appropriations relative to the contract, the Director may, by written notice to the Contractor, immediately terminate the contract in whole or in part in accordance with the applicable provisions of 107.11.

SECTION 108 -- MEASUREMENT AND PAYMENT

108.01 Measurement of Quantities.

All work completed under the contract will be measured according to United States Standard measure.

A station when used as a definition or term of measurement will be 100 linear feet measured horizontally.

The method of measurement and computations to be used in determination of quantities of material furnished and of work performed under the contract will be those methods generally recognized as conforming to good engineering practice.

Unless otherwise specified, longitudinal measurements for area computations will be made horizontally, and no deductions will be made for individual fixtures having an area of 9 square feet or less. Unless otherwise specified, transverse measurements for area computations will be the neat dimensions shown on the plans or ordered in writing.

Structures will be measured according to neat lines shown on the plans or as ordered to fit field conditions.

All items which are measured by the linear foot, such as pipe culverts, guardrail, underdrains and the like, will be measured parallel to the base or foundation upon which such structures are placed.

In computing major volumes of excavation, embankment and borrow, the average end area method will be used. Where it is impracticable to measure material by the cross-section method due to irregular, isolated deposits, acceptable methods involving three-dimensional measurement may be used. When measurement of materials in vehicles is permitted, the quantity will be determined as 80 percent of the loose volume.

In computing volumes of concrete and masonry, the prismoidal method will be used.

The space occupied by pipe will not be included in the volume of headwalls. In the case of pipe having a wall thickness of 2 inches or more, the area of the pipe will be based on the manufacturer's nominal dimensions, outside to outside, or the shell of the pipe. In the case of pipe having a wall thickness of less than 2 inches, the area of the pipe will be based on the nominal inside diameter of the pipe.

The term "ton" will mean the short ton consisting of 2,000 pounds avoirdupois. Except as specified below, all materials which are measured or proportioned by weight shall be weighed on scales which the Contractor has had sealed by the New Hampshire Department of Agriculture or by a company approved by that department. All weighing shall be performed in a manner prescribed under the Rules and Regulations of the Bureau of Weights and Measures of the New Hampshire Department of Agriculture.

Weighing of materials on scales located outside New Hampshire will be permitted for materials produced or stored outside the state, when requested by the Contractor. Out of state weighing, in order to be approved, must be performed on scales sealed by the governmental authority concerned.

Each truck used to haul material being paid for by weight shall bear a plainly legible identification mark and, if required, shall be weighed empty daily at such times as directed.

When material is weighed, the individual weight slips, which shall be furnished by the Contractor, for trucks, trailers or distributors, shall show the following information: the date, the project name and number; slip number; the material or commodity; the dealer or vendor; the Contractor or subcontractor; the location of the scales; the time of loading; the vehicle registration number or other approved legible identification mark; the tare and net weights, with gross weights when applicable; and the weigher's signature or his signed initials.

The right is reserved to weigh any truck, trailer or distributor, at locations designated, before and after making deliveries to the project.

Bituminous materials will be measured by the gallon or ton. When necessary, volumes will be converted to weights, or weights will be converted to gallons, corrected to 60 degrees F, using ASTM D 1250 asphalts.

To assist in computing the number of tons of material required when the rate of application is specified in gallons per square yard, the following approximations may be used:

Bitumen	Gallons per Ton at 60 degrees F	Pounds per Gallon at 60 degrees F
RC-MC 70	248	8.05
RC-MC 250	247	8.11
RC-MC 800	244	8.18
RC-MC 3000	240	8.33
AC-10	235	8.51
AC-20	233	8.58
Emulsion	238	8.38

Each vehicle used in transporting liquid bituminous material shall be weighed before and after loading and the difference in the weights used as the basis for computing pay quantities. A copy of the original weight slip shall be delivered with each truck shipment. In addition to the information required above, the following shall be shown on the slip: the plant and tank number from which the material was obtained, the grade of the material and the percent of additive, if any.

When a slip shows a "Part Load On" or indicates a "high tare", the delivery slip shall be accompanied by a copy of the delivery or weight slip from the previous load indicating the grade of material therein together with substantiation of the tare weight of the vehicle. If the Engineer has already been furnished the slip with the previous load, reference by slip number will satisfy the latter part of this requirement.

Liquid bituminous material delivered but not used in the work shall be weighed and credit given by the vendor. A copy of the weight slip showing such credit shall be returned to the Engineer within 3 calendar days.

When material is specified to be measured by the cubic yard but measurement by weight is approved, such material may be weighed and the weight converted to cubic yards for payment purposes. Necessary conversion factors will be determined by the Engineer.

Timber will be measured by the thousand feet board measure (MBM) actually incorporated in the structure. Measurement will be based on nominal widths, thicknesses and the extreme length of each piece.

The term "lump sum" when used as an item of payment will mean complete payment for the work described in the item.

When a complete structure or structural unit (in effect "lump sum" work) is specified as the unit of measurement, the unit will be constructed to include all necessary fittings and accessories.

Except as may be otherwise provided, partial payments for lump sum items will be made approximately in proportion to the amount of the work completed on those items.

The thickness of plates and galvanized sheets used in the manufacture of corrugated metal pipe, metal plate pipe culverts and arches, and metal cribbing will be specified and measured in decimal fractions of inches.

When standard manufactured items such as fence, wire, plates, rolled shapes, pipe and conduit are identified by gauge, unit weight, section dimensions and the like, such identification will be considered to be nominal weights or dimensions. Unless more stringently controlled by tolerances in cited specifications, manufacturing tolerances established by the industries involved will be accepted.

Material wasted without authority will not be included in the final estimate.

108.02 Scope of Payment.

The Contractor shall receive and accept compensation provided for in the contract as full payment for everything furnished and done by the Contractor under the contract

including all work required, but not specifically mentioned, and also for all loss or damage arising out of the nature of the work aforesaid, or from the action of the elements, or from any unforeseen obstruction or difficulty encountered in the prosecution of the work and for all risks of every description connected with the work and for all expenses incurred by or in consequence of the suspension or discontinuance of the work as herein specified, and for well and faithfully completing the work and the whole thereof.

The Contractor shall be liable to the City for failure to repair, correct, renew or replace at his own cost and expense, all damage due or attributable to defects or imperfections in the construction, which defects or imperfections may be discovered before or at the time of the final inspection and acceptance of the work. See also 107.19.

No moneys, payable under the contract or any part thereof, except the estimate for the first month or period, shall become due and payable, if the Director so elects, until the Contractor shall satisfy the Director that he has fully settled or paid for all labor performed or furnished, for all equipment hired, including trucks, for all materials used, and for fuels, lubricants, power, tools, hardware and supplies purchased by the Contractor and used in carrying out said contract and for labor and parts furnished upon the order of said Contractor for the repair of equipment used in carrying out said contract; and the Director, if he so elects, may pay any and all such bills, in whole or in part, and deduct the amount so paid from any monthly or final estimate, excepting the first estimate.

108.03 Compensation for Altered Quantities.

Except as provided for under the particular contract item, when the accepted quantities of work vary from the quantities in the bid schedule, the Contractor shall accept as payment in full, so far as contract items are concerned, payment at the original contract unit prices for the accepted quantities of work done. No allowance will be made for any increased expense, loss of expected reimbursement or loss of anticipated profits suffered or claimed by the Contractor resulting either directly from such alterations or indirectly from unbalanced allocation among the contract items of overhead expense on the part of the Bidder and subsequent loss of expected reimbursements therefor from any other cause.

108.04 Extra Work.

Extra work performed in accordance with the provisions of 104.03 will be paid for at the contract item bid prices or at agreed prices stipulated in the supplementary agreement authorizing the work or the Department may require the Contractor to do such extra work and be compensated in the following manner:

(a) Labor. For all labor, including equipment operators, and foremen in direct charge of the specific operation, the Contractor shall receive the rate of wage agreed upon in writing for each and every hour that said labor is actually engaged in such work. When the Contractor is ordered to return to the project solely to perform extra work, labor will

be considered as being actually engaged in the work during the hours paid for while travelling.

No part of the salary or expenses of anyone connected with the Contractor's forces above the grade of foreman and having general supervision of the work will be included in the labor item as specified above, except under the following conditions: (1) The work ordered is of an emergency nature or is ordered too late to be done before all work shown on the plans or provided for in the proposal has been substantially accomplished, (2) the Contractor's organization is entirely occupied with extra work, and (3) the nature of the work is such that the services of superintendents and timekeepers may be included in the classification of labor. Trimming of trees will not be considered as requiring a superintendent or timekeeper. In order to determine the allowable rate of pay of eligible superintendents, foremen and timekeepers, a notarized statement shall be furnished to the Engineer. In case no documentary evidence of the actual rate of pay is furnished for such superintendents, foremen and timekeepers, no reimbursement will be allowed. Transportation for a superintendent will be paid for as equipment in the manner specified in (c) below.

When such benefits are required by collective bargaining or other employment contract generally applicable to the classes of labor employed on the work, the Contractor will receive the actual costs paid to, or in behalf of workmen by reason of health and welfare benefits, pension fund benefits, or other benefits. In case the Contractor is required to pay overtime pay or holiday pay to labor engaged in the work, such rate will be the rate reimbursed.

An amount equal to 45 percent of the sum of the above items will also be paid the Contractor, which added amount shall constitute payment for such items, among others, as property damage, liability, and workmen's compensation insurance premiums, unemployment insurance contributions, and social security taxes on the extra work.

Subsistence and travel expenses paid by the Contractor will be reimbursed only when the Engineer orders extra work and in order to perform such work it is necessary to move workmen to the project particularly for that operation. Such subsistence and travel expenses allowed shall be carried on the daily report form under the classification of "Material", without, however, being subject to the added percentage for materials. If other work than such extra work is performed by the individuals during or in connection with that operation, no subsistence or travel expenses will be allowed.

(b) Materials and Specialized Work. When the Engineer directs special work requiring skills, tools and equipment unlike those used by the Contractor or his authorized subcontractors, payment may be made for such work performed by a specialist. For such specialist services, and for materials incorporated in the work, whether furnished by a specialist or by the Contractor, the Contractor will receive the cost, including transportation charges paid by him, to which cost will be added 15 percent of the sum thereof. Invoices for specialist services on the basis of the current market price thereof may be accepted without complete itemization of labor, material and equipment rental

costs when it is impracticable and not in accordance with the established practice of the special service industry to provide such complete itemization.

In those instances wherein a Contractor is required to perform extra work necessitating a fabrication or machining process in a fabrication or machine shop facility away from the job site, the charges for that portion of such work performed in such facility may, by agreement, be accepted as a specialist billing.

The cost of materials will be the cost to the purchaser, whether Contractor, subcontractor or other, from the supplier thereof, except as the following are applicable:

(1) If materials are procured by the purchaser by any method which is not a direct purchase from and a direct billing by the actual supplier to such purchaser, the cost of such materials will be deemed to be the price paid to the actual supplier as determined by the Engineer. No markup except for actual costs incurred in the handling of such materials will be permitted.

(2) If the materials are obtained from a supply or source owned wholly or in part by the purchaser, payment therefor will not exceed the price paid by the purchaser for similar materials furnished from said source on contract items or the current wholesale price for such materials delivered to the job site, whichever price is lower.

(3) If, in the opinion of the Engineer, the cost of such materials is excessive, then the cost of such material will be deemed to be the lowest current wholesale price at which such materials are available in the quantities concerned delivered to the job site.

(4) If the Contractor does not furnish satisfactory evidence of the cost of such materials from the actual supplier thereof, the cost will then be determined in accordance with paragraph (3).

(c) Equipment. For any machinery or special equipment (other than small tools) the use of which has been authorized, the Contractor will receive the rental charge agreed upon for the time that such equipment is doing actual work and used exclusively for the extra work. This rental charge shall include the cost of all fuel, oil, lubrication, supplies, necessary attachments, repairs and maintenance of any kind, depreciation, storage, insurance, small tools and all incidentals. The rental charge shall not exceed the rate published by Dataquest, Incorporated, for such equipment in the edition of the "Rental Rate Blue Book for Construction Equipment" current at the beginning of the calendar year in which the extra work is being performed. Revised sections published during the year will not be incorporated in the "Blue Book" until the beginning of the next calendar year. The area adjustment percentage will be reviewed and revised as necessary subsequent to the revision of the "Blue Book" sections. If it is deemed necessary by the Engineer to use equipment not listed in the above publication, a suitable rental rate for such equipment will be established by the Engineer. The Contractor may furnish any cost data which might assist the Engineer in the establishment of such rental rate.

The Contractor shall provide the Engineer with the following: the manufacturer's name, equipment type, year of manufacture, model number, type of fuel used, horsepower rating, attachments required, together with their size or capacity, and any further information necessary to ascertain the proper rate. The Contractor shall have available for the Engineer's use a revised copy of the "Blue Book" as referenced in (c) above.

Equipment used by the Contractor shall be in good working condition and shall be of suitable size and suitable capacity required for the work to be performed. The rate of the basic equipment with the appropriate attachments shall include only the rate for the combined equipment necessary to perform the extra work. In case the Contractor elects to use equipment of a higher rental value than that suitable for the work, payment will be made at the rate applicable to the suitable equipment. The equipment actually used and the suitable equipment to paid for will be recorded as a part of the record for extra work. The Engineer will determine the suitability of the equipment. If there is a differential in the rate of pay of the operator of oversize or higher rate equipment, the rate paid for the operator will likewise be that for the suitable equipment.

Unless otherwise specified, manufacturer's ratings and manufacturer approved modifications shall be used to classify equipment for the determination of applicable rental rates. Equipment which has no direct power unit shall be powered by a unit of at least the minimum rating recommended by the manufacturer.

Rental time will not be allowed while equipment is inoperative due to breakdowns.

The maximum rental period to be paid for per day shall not exceed 8 hours unless the equipment is in operation for a longer time with the approval of the Engineer.

The hourly equipment rental rate (R) will be determined as follows:

$$R = (A \times B \times C) + D$$

Where A = Blue Book monthly rate divided by 176
B = Blue Book regional adjustment factor for New Hampshire plus 100%.
C = Factor from Rate Adjustment Table for the year of equipment manufacture.
D = Blue Book Estimated operating costs per hour.

When no work but extra work is performed by equipment which must be moved to the work and used, payment for loading, transporting and unloading equipment will be made under the following conditions:

(1) The original location of the equipment to be hauled to the location of the work shall be agreed to in advance.

(2) Should the Contractor desire the return of the equipment to a location other than its original location, the Department will pay the cost of transportation, provided such payment shall not exceed the cost of moving the equipment to the work.

The rental time to be paid for equipment already on the work shall be the time the equipment is in operation on the extra work being performed and, in addition, shall include the time required to move the equipment to the location of such work and return it to the original location or to another location requiring no more time than that required to return it to its original location, except that moving time will not be paid for if the equipment is used during the move on work other than extra work. Loading and transporting cost will be allowed, in lieu of moving time, when the equipment is moved by means other than its own power, except that no payment will be made if the equipment is used during the move on work other than extra work.

(d) Miscellaneous. No additional allowance will be made for general superintendence, the use of small tools, or for other costs for which no specific allowance is herein provided.

(e) Compensation. The compensation herein provided shall be accepted by the Contractor as payment in full for extra work, including superintendence (except as provided in (a) above), subcontracting, taxes, bond, overhead, profit and other costs in connection therewith which are not provided for herein. An amount equal to 5 percent of the sum of the labor, material and equipment performed or used by a subcontractor will be allowed when such work is performed on an extra work basis, except that no percentage will be allowed for equipment rented from the Contractor.

(f) Statements. The Contractor's representative and the Engineer each day shall compare records of work done as ordered on forms provided by the Engineer and shall thereafter be considered to be the basis for payment of the work performed, but shall not preclude subsequent adjustment based on a later audit by the Department.

Such records shall show the following:

(1) Name of subcontractor, if appropriate.
(2) Name, classification, date, daily hours, total hours, rate and extension for each laborer, operator and foreman.
(3) Quantities of materials, prices and extensions.
(4) Charges for transportation of materials.
(5) Specialists' charges.
(6) Designation, dates, daily hours, rental rate and extension for each unit of machinery and equipment.

The Contractor shall certify that the labor, materials and equipment listed were actually used on the extra work described, that the labor and equipment were used for the hours

indicated and that the rates for labor do not exceed those for comparable labor currently employed on the project.

Statements shall be accompanied or followed by certified copies of the appropriate payrolls. Statements shall be supported by receipted bills or acceptable invoices for the cost of all materials used and for transportation and specialists' charges. However, in the case of materials, if materials used on the extra work are not specifically purchased for such work but are taken from the Contractor's stock, then in lieu of the invoices, the Contractor shall furnish an affidavit certifying that such materials were taken from his stock, that the quantity claimed was actually used and that the price and transportation claimed represent the actual cost to the Contractor.

During the life of the contract and for a period of not less than 3 years after the date of acceptance thereof, the Contractor's cost records pertaining to work paid for on an extra work basis shall be open to inspection or audit by representatives of the Department, and the Contractor shall retain such records for that period. Where payment for materials or labor is based on the cost thereof to forces other than the Contractor, the Contractor shall make every reasonable effort to insure that the cost records of such other forces will be open to inspection and audit by representatives of the Department on the same terms and conditions as the cost records of the Contractor.

108.05 Eliminated Items.

Should any items contained in the contract be found unnecessary for the proper completion of the work, the Engineer may eliminate such items from the contract and such action shall in no way invalidate the contract. When notified of the elimination of items, the Contractor will be reimbursed for actual work done and all costs incurred, including mobilization of materials prior to said notification.

108.06 Partial Payments.

The Engineer shall, by the twenty-fifth day of each month, make an approximate estimate, such as he shall believe to be just and fair, of the amount and value of the work done and the materials incorporated into the work during the calendar month. Payment may at any time be withheld if the work is not proceeding in accordance with the contract. Upon such estimate being made and certified by the Engineer, the City will pay to the Contractor ninety (90) percent of the amount stated in such estimate or certificate by the 20th of the following month, but the City may, at all times, reserve and retain, out of any or all partial payments, all such sums as it is authorized to reserve or retain. The making of any such estimates or payment therein shall not be taken or construed as an approval or acceptance by the City of any work so estimated. All such payments shall be considered tentative only, subject to correction in the final estimate and need not be based upon an accurate measurement.

The Contractor shall be responsible for any loss or damage to any such material or equipment until the same has been completely installed, tested and accepted.

The Contractor shall pay for all transportation and utility services not later than the twentieth day of the calendar month following that in which such services are rendered.

The Contractor shall pay for all materials, tools and other expendable equipment to the extent of ninety percent of the cost thereof, not later than the twentieth day of the calendar month following that in which such materials, tools and equipment are delivered to the site of the project and the balance of the cost thereof not later than the thirtieth day following the completion of that part of the work in or on which such materials, tools and equipment are incorporated or used.

The Contractor shall from time to time, as required by the Engineer, furnish the Engineer with affidavits and satisfactory evidence that all persons who have done work or furnished materials under the contract, or have suffered damage on account of the Contractor's operations, have been fully paid or secured; and in case such evidence be not furnished as aforesaid, such amount as the Engineer may consider necessary to meet the lawful claims of the persons aforesaid will be retained from the monies otherwise due the Contractor, until the liabilities aforesaid have been fully satisfied. It is understood and agreed, however, that the City hereby assumes no obligation toward such claimants, nor in any way undertakes to pay such claims out of any funds due or that may become due the Contractor, or out of its own funds.

If the Contractor claims compensation for any damages sustained by breach of contract or otherwise, be the same based on claims that are due and full credit has not been given the Contractor for work performed or material furnished in accordance with the terms of the contract or for any other cause, he shall promptly, after sustaining any such damage, make a written statement of the nature of the damage sustained, to the Engineer, and shall on or before the fifteenth day of the month following that in which the damage shall have been sustained, file with the Engineer an itemized statement of the details and amount of such damage, and unless such statement is made as thus required, his claim for compensation shall be forfeited and invalidated, and he shall not be entitled to payment on account of any such damage.

The City may keep any monies which would otherwise be payable at any time hereunder and apply the same, or so much as may be necessary therefore, to the payment of any expenses, losses or damages, incurred by the City and determined as herein provided, and may retain, until all claims are settled, so much of such money as the City shall be of the opinion will be required to settle all claims filed with the City, its officers and agents, relating to the contract.

108.07 Payment for Material on Hand.

Partial payments may be made to the extent of the delivered cost of materials to be incorporated in the work, provided the materials meet the requirements of the plans and

specifications when delivered in the vicinity of the project. In any event, partial payment for materials on hand shall not exceed 90 percent of the bid price.

Payment for materials on hand will not constitute acceptance and any faulty material will be rejected even though previous payment may have been made. The Contractor shall be solely responsible for furnishing and incorporating acceptable materials into the work and for any material on which partial payment has been made.

108.08 Payment For Material Not on Hand.

Payment will be based on the actual cost to the Contractor as indicated on invoices furnished to the Engineer. Notarized copies of paid invoices for all involved material payments allowed on the estimate must be submitted to the Engineer within 30 calendar days of the date of the estimate on which material allowance was made or such material allowance will be deducted from subsequent estimates until such notices have been furnished or until the materials are on hand. Payment shall not exceed 90 percent of the bid price. No payment will be made on materials for any item in the contract whose total dollar value is less than $5,000. Such payment will not constitute acceptance and any faulty material will be rejected even though previous payment may have been made. The Contractor shall be solely responsible for furnishing and incorporating acceptable materials into the work for any material on which partial payment has been made and for any loss of or damage to such materials regardless of the cause.

108.09 Semi-final and Final Payments.

Within 65 days after the work has been completed to the satisfaction of the Engineer, he will make a final estimate of the amount of work done by the Contractor and of the value thereof. Such final estimate shall include the value of all work performed under the contract and all retained percentage, after deducting therefrom the total of all previous periodic or partial payments and all amounts to be retained to satisfy any and all outstanding claims or liens that have been duly filed against the Contractor. All prior estimates shall be subject to correction by this final estimate. After preparation, a copy of the final estimate shall be submitted to the Contractor for his approval and agreement.

If, after final inspection has been made, there are any payment or extra work items that are in dispute, either as to the quantity or value of the work performed hereunder, such items or claims may be excluded from the final estimate and payment for such disputed items may be deferred until such time as an agreement has been reached between the Contractor and the City or until such time as the claim has been adjudicated. In such cases, a semi-final estimate should be prepared within the said period of 65 days after completion, covering the value of all work performed and all retained percentage on all items of the contract that are not in dispute but subject to the same deductions and retainage as set forth above and with all disputed items or claims excluded.

In the event that the work has been substantially completed and the project has been opened to public use by order of the OWNER or its duly authorized agents, but final acceptance of the work is subject to delay because of minor uncompleted items which do not impair the usefulness of the project, a semi-final estimate shall be prepared within a like period of 65 days after such contract has been substantially completed and placed in public use. Such semi- final estimate shall include an estimate of value of all work performed in accordance with the terms of the contract, including the amount of retained percentage withheld from previous partial payments but excluding the same deductions and retainage as set forth above; an estimate of the value of the work remaining to be performed and any items of work that may be in dispute. Payment for such excluded items or portions thereof may be deferred until such time as the remaining work has been satisfactorily completed, or in the case of disputed items or claims, until such time as an agreement has been reached.

If the Engineer delays or fails to prepare any final or semi-final estimate within the period of time specified herein, interest on the amount due the Contractor on any such final or semifinal estimate shall be computed and paid by the City at the rate of fifteen percent (15%) per annum, beginning 66 days after the contract has been satisfactorily completed and opened to public use, as the case may be, and running until the date such estimate has been prepared and submitted to the Contractor for acceptance. The amount of such interest shall be included in the estimate when prepared.

Such final or semi-final estimates, however, shall not serve as a release of the Contractor or of his sureties from the required guarantee against defects of materials, workmanship and/or over contract performance for a period of one (1) year from the date of acceptance.

SECTION 201 -- CLEARING AND GRUBBING

Description

1.1 This work shall consist of clearing, grubbing, removing, and disposing of all vegetation and debris within the limits shown on the plans or specified below, except such objects as are designated to remain or are to be removed in accordance with other sections of these specifications. This work shall also include the preservation from injury or defacement of all vegetation and objects designated to remain.

1.2 Areas which will be approved under clearing and grubbing, outside of the limits shown on the plans for clearing and grubbing will be those where the wooded growth is considered by the Engineer to be comparable to that existing in the designated areas and where full-scale clearing and grubbing operations are required. Areas of only scattered small growth, grass, weeds, crops, or occasional small roots may require some work but will not be included for payment under this item.

1.3 The items of trees, stumps, and roadside clean up will be limited to work performed outside of the areas designated under 1.1 and 1.2.

Construction Requirements

3.1 Clearing and Grubbing, Trees, and Stumps.

3.1.1 No trees shall be cut until designated by the Engineer. Particular reference is made to fruit, ornamental, or shade trees or plants at the edge of the roadside slopes. Cut or scarred surfaces of trees or shrubs selected for retention shall be painted with an approved wound dressing or treated according to other accepted arboricultural practices.

3.1.1.1 The Contractor usually is required to file an intent to cut and will pay all charges, fees and taxes as may be required under Chapter 79 of the RSA.

3.1.2 All trees ordered cut shall become the property of, and shall be disposed of by the Contractor, except as provided hereinafter. In the interest of energy and material conservation, the Contractor shall salvage wood from cut trees in accordance with standard commercial logging practices.

3.1.3 Unless otherwise shown on the plans, clearing and grubbing shall extend 10 feet beyond the excavation and 5 feet beyond embankment slopes.

3.1.4 The Contractor shall perform the work of clearing and grubbing to include the removal of only the materials here specified. In order to conserve topsoil, the Contractor shall make use of rake teeth on bulldozers in the process of removing stumps and brush unless other equipment is permitted.

3.1.5 Except in areas to be excavated, excavation caused by grubbing operations shall be filled with suitable material which shall be compacted to conform to the surrounding ground.

3.1.6 All stumps and large roots within the limits of the roadbed shall be completely removed to a depth of 3 feet below subgrade unless a greater or lesser depth is specified on the plans. Stumps within the limits of the roadbed below such depth, and stumps under embankments or outside the roadbed shall be cut off within 6 inches of the existing ground surface except in the area to be rounded at the top of backslopes, where stumps are to be cut off flush with the surface of the final slope line, or removed.

3.1.7 All stumps, roots, branches, brush, weeds, and other perishable material resulting from the clearing and grubbing operations shall be disposed of by an approved method. The Contractor's attention is directed to RSA 149-M regarding the fact that stumps and roots from grubbing operations have been classified as solid waste. As such, these stumps shall be disposed of in permitted sites, through firms having facilities to convert the stumps to marketable products or by grinding or chipping. Permits for sites are obtained from the N. H. Department of Environmental Services, Division of Waste Management. It is the responsibility of the person disposing of the stumps to obtain all the necessary permits and comply with the New Hampshire Solid Waste Rules and Design Standards in effect at the time of disposal.

3.1.7.1 All wood less than 5 inches in diameter and not cut into 4 foot lengths for firewood shall be chipped. Burying of brush shall not be permitted. Stumps, roots and rotten wood may be buried at approved sites on or off the project. Approved sites shall have a minimum of 24 inches of cover material and shall be graded and shaped as directed by the Engineer. If burial is to be on private land, the agreements as to how the area is to be left shall be set forth on the forms provided by the Department in accordance with 106.10 disposal areas. Three signed copies of the agreements shall be furnished to the Engineer. Approval of the proposed disposal area will be contingent upon agreement by the Contractor and the property owner to leave the area in such shape that it will blend with the surrounding terrain and that erosion will be kept to the minimum. Without special permission, slopes shall not be left steeper than 3:1. No disposal area shall be left in such condition that erosion, after completion of the work, might result in water pollution by silt or other deleterious substances. Areas shall be left in such shape and condition that material will not wash and block or obstruct drainage ways. If holes caused by settlement appear, they shall be filled as directed. A release from the property owner is required prior to final acceptance.

3.1.7.2 Except in the case where wood is piled neatly for future use, storage locations should be outside the limits of view from the project, other highways, and residences.

3.1.7.3 When ordered, available chipped material shall be stockpiled in the quantity directed to be used for erosion control. The Contractor may market any remaining chips or dispose of them by other approved methods.

3.1.7.4 Unless otherwise ordered, disposal areas shall be covered with material capable of supporting vegetation and either fertilized and seeded with grass seed or planted with seedlings. Seedlings shall be set out in accordance with accepted horticultural practices as directed in the agreement.

3.1.7.5 Unless permission is given to preserve access roads to disposal areas adjacent to highways, such access roads shall be obliterated.

3.1.8 When fence lines go through wooded areas, a strip three feet wide shall be cleared for the fence line.

3.2 Roadside Cleanup.

3.2.1 Roadside cleanup of leaning, dead, unsound and unsightly trees, branches, stubs, refuse, and slash, generally to a limit of approximately 15 feet outside the limits specified in 3.1.3 above, shall be performed where and as directed, and the material shall be disposed of as provided in 3.1. All tree trimming in connection with roadside cleanup shall be done by competent workmen in accordance with good tree surgery practice.

3.3 Trimming of Trees.

3.3.1 On trees or shrubs designated to remain, low hanging branches and unsound or unsightly branches shall be removed as directed. Branches of trees extending over the roadbed shall be trimmed to give a clear height of 20 feet above the roadbed surface. All trimming shall be done by skilled workmen and in accordance with good tree surgery practice.

Method of Measurement

4.1 Clearing and grubbing will be measured by the acre, horizontally, to the nearest 0.01 of an acre, including the area shown on the plans to be cleared and grubbed, together with areas of clearing and grubbing, as ordered, outside the limits shown on the plans.

4.1.1 When fence goes through a wooded area, a strip 3 feet wide will be paid as clearing for fence lines, to the nearest .01 of an acre.

4.1.2 Clearing and grubbing in connection with borrow sources will be subsidiary.

4.2 Trees will be measured by the number of trees of each class removed.

4.2.1 The class of the tree shall be determined by circumference measurement at a height of 4 feet above the average ground. Small trees shall be classified as trees measuring more than 28 inches (approximately 9 inches in diameter) and less than 75 inches (approximately 24 inches in diameter). Large trees shall be classified as trees

measuring 75 inches or over. Trees 28 inches or under in circumference will be classed as brush and such work shall be subsidiary.

4.2.2 Trees 28 inches or under in circumference will be classified as brush, and as such, their clearing will be considered subsidiary.

4.3 Stumps will be measured by the number of stumps removed measuring more than 28 inches in circumference at the cutoff. Stumps of trees cut by the Contractor will not be measured.

4.4 Roadside cleanup will be measured by the acre, horizontally, to the nearest 0.01 of an acre.

Basis of Payment

5.1 The accepted quantity of clearing and grubbing will be paid for at the contract unit price per acre.

5.1.1 When no quantity for clearing and grubbing is included in the contract, the work shall be subsidiary.

5.1.2 When no quantity for clearing for fence lines is included in the contract, the work shall be subsidiary.

5.2 The accepted quantities of trees and stumps will be paid for at the contract unit price per each of the class specified.

5.2.1 When and item for removing trees but no item for removing stumps appears in the contract, each stump shown on the plans as a tree and removed as ordered will be paid for as 1/2 a tree of the respective size shown.

5.2.2 This item will not include trees and stumps removed from areas paid for under clearing and grubbing, roadside cleanup, or trees or stumps previously disposed of.

5.2.3 When there is no item for removing small trees and there is an item for large trees, small trees shall be paid for at 1/2 the contract price of large trees; conversely large trees shall be paid for at 2 times the contract price for small trees.

5.2.4 When there are no quantities for either trees or stumps in the proposal, trees and stumps removed shall be subsidiary.

5.3 The accepted quantity of stumps will be paid for at the contract unit price per each.

5.3.1 When no quantity of stumps is included in the contract, work ordered to remove stumps will be paid as extra work.

5.4 The accepted quantity of roadside cleanup, will be paid for at the contract unit price per acre.

5.4.1 When no quantity of roadside cleanup is included in the contract, work ordered of such nature will be paid for as extra work.

5.5 Trimming of trees where directed outside of the areas measured under the item of roadside cleanup will be paid for as extra work.

Pay items and units:

201.01	Clearing	Acre
201.02	Grubbing	Acre
201.1	Clearing and Grubbing	Acre
201.21	Removing Small Trees	Each
201.22	Removing Large Trees	Each
201.31	Tree Pruning, Small Trees	Each
201.32	Tree Pruning, Large Trees	Each
201.4	Removing Stumps	Each
201.5	Roadside Cleanup	Acre
201.6	Clearing for fence Lines	Acre
201.7	Selective Clearing and Thinning	Acre
201.89	Fertilizing Individual Trees	Ton
-----	Roadside Cleanup	Extra Work
-----	Trimming of trees	Extra work

SECTION 202 -- REMOVAL OF DRAINAGE & SEWER STRUCTURES

Description

1.1 This work shall consist of the removal and salvage or satisfactory disposal of pipes and other drainage and sewer structures as designated on the plans or ordered.

1.2 The work shall also consist of the removal and salvage or satisfactory disposal of and other items as designated on the plans or ordered.

Construction Requirements

3.1 Existing pipes, catch basins, manholes and other drainage and sewer structures which are not to remain as integral parts of a drainage or sewer system, shall be removed as directed. Those under roadways in use by traffic shall not be removed until satisfactory arrangements have been made to accommodate the traffic.

3.2 When the engineer determines that pieces of pipe removed are suitable for re-use, they shall be stockpiled where directed within the project area and when not suitable for re-use, they shall be disposed of by the contractor. Catch basin and drop inlet grates, manhole covers, frames and all such castings and granite curb inlets shall be carefully removed and likewise stockpiled for re-use on the project or salvaged by the City. Other parts of catch basins, drop inlets and manholes shall be disposed of by the contractor.

3.3 Trenches and holes resulting from removal operations except those within the limits of subsequent excavation shall be backfilled in accordance with the provisions of Section 209. If caving has occurred the caved material shall be removed before backfill is undertaken. All excavated material shall be used or disposed of in accordance with the provisions of Section 206 and 209.

Method of Measurement

4.1 Pipe removed will be measured by the linear foot within the specified size group, measured in place prior to removal if practicable; otherwise the length of pipe removed will be computed as the product of the number of commercial lengths and the nominal lengths.

4.1.1 All solid rock will be measured as rock structure excavation. Boulders, mortared structures such as headwalls and the like found to measure 1 cubic yard or more will also be measured as rock structure excavation when such excavation is performed for pipe removal, but pipe itself will not be measured as rock.

4.2 Catch basins, drop inlets and manholes removed, will be measured by each, no extra measurement will be made of granite curb inlets removed unless an item therefore is included in the contract.

4.3 Curb removed for storage will be measured by the linear foot.

Basis of Payment

5.1 The accepted quantities of pipes, box culverts, catch basins, drop inlets, manholes and other obstructions demolished or removed will be paid for at the contract unit price per unit of measurement for each of the pay items listed hereinafter.

5.1.1 No payment will be made herein for the removal of pipes, box culverts, catch basins, drop inlets, manholes and other obstructions encountered within the payment limits of another excavation item in the contract.

5.2 There will be no separate payment for items paid for herein except that rock measured under 3.1.1 will be paid for as rock structure excavation. There will be no deduction from borrow for material used to fill the remaining cavities.

5.3 Existing pavement removed will be paid for under the pertinent excavation items.

5.4 When no basis of payment for the removal of structures and obstructions shown on the plans is included in the proposal, such work will be subsidiary.

Pay items and units:

202.41	Removal of Existing Pipe 0-24" diameter	L.F.
202.42	Removal of Existing Pipe over 24" diameter	L.F.
202.5	Removal of Catch Basins, Drop Inlets and Manholes	Each
202.51	Removal of Granite Curb Inlets	Each
202.6	Curb Removal for Storage	L.F.

SECTION 203 -- EXCAVATION AND EMBANKMENT

Description

1.1 This work shall consist of excavation of all material not being removed under some other item, placement and compaction of all material required for the work, and necessary disposal of all other material. The excavation will be classified as described below. Embankment-in-place shall mean material placed under such item. Rehandling Surcharge Material shall consist of removing and redepositing the surplus surcharge material which has been used to displace or consolidate soft material below specified sections of fill.

1.2 This work shall consist of furnishing and placing an impervious material in conformity with the lines, grades, and dimensions shown on the plans or as ordered. The intent is to form a soil layer that is as impervious as possible, to minimize infiltration of storm water runoff into the ground.

Classification of Material

2.1 Common excavation shall consist of all excavation not included as rock excavation or not otherwise classified. Glacial till or boulder clay will be considered as common excavation.

2.2 Rock excavation shall consist of all solid rock which cannot be removed without blasting or ripping. It shall also consist of boulders and parts of masonry structures when found to measure two cubic yards or more.

2.3 Unclassified excavation shall consist of all materials of whatever character encountered in the work.

2.4 Muck excavation shall consist of deposits of saturated or unsaturated mixtures of soils and organic matter not suitable for foundation material regardless of moisture content.

2.5 Borrow shall consist of approved material required for the construction of fills or other portions of the work.

2.6 Impervious material shall be natural, inorganic soil that is free from foreign matter such as construction debris, trash, wood, roots, leaves, and other organic matter.

2.6.1 Some examples of soils that are considered acceptable for impervious material are clay, glacial till, and well graded soils with high silt contents. Impervious material shall be as follows when tested in accordance with AASHTO T 27:

Seive Size	Percentage by Weight Passing
6 inch	100
2 inch	95 - 100
No. 4	70 – 100
No. 40	35 – 100
No. 200 in total	25 - 100

2.6.2 For a preliminary determination of compliance with the specification for grading and for determination of the maximum dry density, the Contractor shall submit to the Engineer samples of materials to be used for impervious material prior to its placement. Samples may be taken from the pit or from stockpiles. Sampling and testing shall conform to AASHTO T 27, R 13, and T 99. Materials not meeting these specifications shall not be placed.

Construction Requirements

3.1 General. The excavation and embankments shall be finished to reasonably smooth and uniform surfaces.

3.1.1 Conservation of growth. Excavation shall be carefully performed in proximity of trees and shrubs designated to be saved on the plans or as ordered. Any roots which have to be removed shall be cleanly cut, and the larger ones shall be painted with approved wood dressing or treated according to other accepted arboricultural practices.

3.1.2 Topsoil and other humus material. Topsoil and desirable humus material shall be removed in excavation areas and also in fill areas to such depths as the Engineer may direct. Such material shall be reserved and shall be stockpiled in accessible piles which can be measured readily and accurately by the Engineer. Unless otherwise permitted, each stockpile shall contain a minimum of 200 cubic yards, and have a height of at least 4 feet.

3.1.3 Material found in the roadway. Sand, gravel, or other materials found in the roadway may be used under the specific item in accordance with 104.05 when permitted.

3.1.4 Removing abandoned road surface. Old road surfaces shown or ordered to be removed shall be stripped neatly to the depth and width as shown on the Plans or as ordered.

3.1.5 Drives. Drives shall be retained or constructed as shown on the plans or as ordered.

3.1.6 Degraded material. When the Contractor's selected method of excavation operations results in saturation of non- porous materials and as a consequence the excavation must be wasted, a deduction from borrow will be made of the amount wasted. The quantity shall be as determined by the Engineer.

3.2 Rock Excavation.

3.2.1 Preliminary work. When rock excavation is to be performed the overburden shall be removed, or trenches shall be excavated through the overburden at the intervals directed, normally

25 feet, but in no case closer than 10 feet apart to permit cross-sectioning of the rock in its original position. Generally, the use of power equipment will be satisfactory. Rock removed prior to sectioning will be considered as common excavation.

3.2.2 Blasting operations. The required slopes or configurations shown on the plans or ordered shall be constructed in a safe and stable condition while insuring the safety and convenience of the public.

3.2.2.1 The Engineer will, at all times, have the authority to prohibit or halt the Contractor's blasting operations if it is apparent that through the methods being employed, the required slopes are not being obtained in a stable condition or the safety and convenience of the public is being jeopardized.

3.2.2.2 The Contractor shall schedule his operations so that all rock excavation within 300 feet of any portion of a proposed bridge or within 100 feet of any other proposed structure is completed before any structure work is started.

3.2.2.3 All loose and unstable material, all breakage and potentially unstable rock slides, even if located beyond the payment lines, shall be removed or stabilized, to the Engineer's satisfaction during or upon completion of the excavation in each lift. Drilling of the next lift will not be allowed until this work has been completed. It shall be the responsibility of the Contractor to perform all phases of this work to produce the required slopes.

3.2.2.4 All blasting operations, including the storage and handling of explosives and blasting agents, shall be performed in accordance with the applicable provisions of the Standard Specifications and all other pertinent Federal, State, and local regulations. Whenever explosives are used, they shall be of such character and in such amount as is permitted by the State and local laws and ordinances and all respective agencies having jurisdiction over them.

3.2.2.5 The Contractor shall observe the entire blast area to guard against potential hazards before commencing work. The Contractor shall not be allowed to store explosives on the project site or on City owned property unless prior approval is granted by the Department.

3.2.2.6 Drill hole conditions may vary from dry to filled with water. The Contractor will be required to use whatever type(s) of explosives and/or blasting accessories necessary to accomplish the specified results.

3.2.3 The Contractor shall submit the following information to the Engineer at least two weeks prior to commencing drilling and blasting operations:

a) Sequence and schedule of production blast rounds, including the general method of developing the excavation, lift heights, starting locations, estimated starting dates, estimated rates of progress, etc.

b) Written evidence of the licensing, experience and qualifications of the blaster who will be directly responsible for the loading and firing of each shot.

c) Name and qualifications of the person responsible for designing and directing the Contractor's blasting operation.

d) Name and qualifications of the independent seismologist or blasting consultant proposed for use in conducting pre- blast condition surveys.

e) Name and qualifications of the independent seismologist of blasting consultant proposed for use in monitoring blast vibration (see section 3.2.5.2). A sample of a previous vibration analysis and/or report shall be included with the qualifications. The seismologist or blasting consultant shall be subject to the Engineer's approval.

f) Listing of instrumentation which the seismologist or blasting consultant proposes to use to monitor vibrations together with performance specifications, instrumentation user's manual supplied by the manufacturer(s). (See section 3.2.5.6).

3.2.4 Blasting log. A blasting log must be completed daily for every primary blast and copies must be provided to the Engineer. An example of a typical blasting log is shown in Figure 1. The drilling contractor may use a different format for his blasting log if it has been approved by the Engineer.

3.2.5 Blast vibration control and monitoring. The Contractor shall be required to comply with the blasting vibration limits established herein. The Contractor shall provide for monitoring of the blasting vibrations (both ground and air concussions) produced as a result of the construction activities and shall provide for a Pre-Blast Condition survey of structures. The Contractor shall cooperate in adjusting his blasting procedures to maintain the vibration limits specified herein and to minimize vibration-related claims and complaints.

3.2.5.1 Vibration limits.

3.2.5.1.1 Ground Limits. The maximum peak particle velocity (PPV) of ground vibration (in any of the three mutually perpendicular components of particle velocity) for above- ground, residential structures shall not exceed the following limits:

Ground Vibration

Type of Structure	Peak Particle Velocity, Inches/Sec Frequencies Below 40 HZ	Frequencies 40 HZ or Greater
Modern Homes -Drywall Interiors	0.75	2.0
Older Homes -Plaster on Wood Lath for Interiors	0.50	2.0

3.2.5.1.2 The maximum peak particle velocity of ground vibrations (in any of the three mutually perpendicular components of particle velocity) for non-residential structures shall not exceed 2.0 inches/sec.

3.2.5.1.3 The maximum PPV of ground vibrations, in any of the three mutually perpendicular components of particle velocity, for underground utilities shall not exceed 2.0 in/s. Buried pipelines and other utilities owned by private utility companies are sometimes subject to lower limiting values imposed by the owner. The Contractor shall verify the maximum allowable PPV of ground vibration allowed by the individual utilities.

3.2.5.1.4 Deteriorated structures or utilities, structures housing computers or other sensitive equipment, and manufacturing processes that are sensitive to vibrations may require lower PPV limits than stated in this specification. If lower limits are required, a special prevision describing the limits or conditions required will be included in the proposal.

3.2.5.1.5 The Contractor shall not conduct blasting operations within 20 ft of newly placed concrete regardless of the age of the concrete. For blasting greater than 20 ft away from new concrete, the following vibration limits apply:

Ground Vibration Limits for New Concrete
Maximum PPV (in/s)

Distance to Blasting	Type I Concrete		Type II Concrete	
(ft)	<24 hrs	>24 hrs Old	<24 hrs	>24 hrs Old
20 - 50	2.0	4.0	1.5	3.0
40 - 150	1.5	3.5	1.0	2.5
> 150	1.0	3.0	0.5	2.0

Type I concrete construction shall be considered to be concrete which is not designed to undergo structure bending or deflection. In general, a concrete section shall be considered Type I if the vertical dimension is not more than twice the horizontal dimension. Examples of Type I concrete construction are fill or mass concrete, spread footings, and slabs cast on grade.

Type II concrete construction shall be considered to be concrete which is not Type I, and includes structural walls and slabs over an open span.

3.2.5.1.6 Air concussion. The contractor shall conduct all blasting activities in such a manner that the peak airblast overpressure at all above ground, occupied structures in the vicinity of blasting does not exceed 128 decibels (dB).

3.2.5.1.7 If blast induced ground vibrations exceed the limits for maximum peak particle velocity, then alternative rock excavation techniques may be necessary. All non-explosive methods of rock excavation are subject to approval by the Engineer.

SECTION 203

FIGURE #203-1

BLASTING LOG

1. Company name: _____

2. Location of Shot (Station): _____

3. Shot #: _____ 4. Time: _____ 5. Date: _____

6. Weather: _____

_____

7. Wind Direction: _____ 8. Temperature: _____

9. Distance & Direction to Nearest Structure: _____ & _____

10. Depth of Water (ft.): _____

11. Total Explosives Allowed Per Delay Period:

Weight of Explosive(s) (lb)= (Distance in Feet* / 50)^2 = _____

*Distance to nearest structure

12. Diameter of Holes (in.): Production _____ Presplit _____

13. Hole Depth (ft.): _____

14. Total # of Holes: _____

15. Drill Pattern - Burden x Spacing (ft.): _____

20. Density of Explosive(s) Used: _____

21. Kind of Delay Periods: _____

22. Total # of Delay Periods: _____

23. Length of Delay Periods (ms): _____

24. Total of Explosives Used (lbs.): _____

25. Maximum # of Holes Per Delay Period: _____

26. Maximum Amount of Explosive(s) Per Delay Period (lbs): _____

27. Powder Factor = $\frac{\text{Pounds of Explosives Per Hole}}{\text{Cubic Yards of Rock Per Hole}}$

Powder Factor = (lbs/yd^3) _____

FIGURE #203-1 (continued)

28. Scale Distance = $\frac{\text{Distance in Feet}}{(\text{Weight Per Delay Period})^{1/2}}$

Scale Distance = _____

29. Method of Firing: _____

30. # Series, Circuits: _____

31. Location of Seismograph: _____

_____

a. Distance from Shot and Direction: _____

b. Person Taking Reading: _____

c. Seismograph Reading: _____

d. Peak Sound Pressure Level: _____

e. Vibration Measurements: _____

Transverse
Vertical
Longitudinal

DIAGRAM OF SHOT

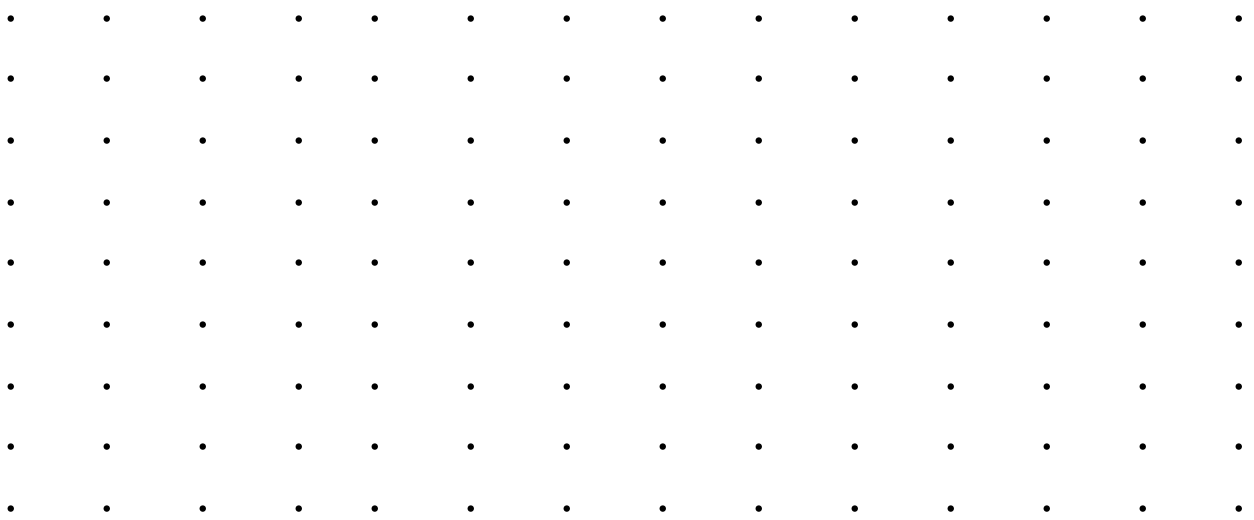

Name of Blaster: _____

License Number of Blaster: _____

3.2.5.2 Seismologist/Blasting Consultant. The Contractor will be required to retain a seismologist or Blasting Consultant to monitor, record, analyze, and report the seismic vibrations being caused by blasting activities. The name of the Seismologist/Blasting Consultant and a resume of his qualifications shall be submitted to the Engineer for approval no later than the preconstruction conference. No drilling or blasting shall take place until such approval is given. The Seismologist/Blasting Consultant shall not be an employee of the Contractor, subcontractor, explosives manufacturer, or explosives distributor.

3.2.5.3 Seismologist/Blasting Consultant qualifications. The Seismologist shall be experienced in the subject of vibrations emanating from construction activities. He shall be qualified to thoroughly analyze seismic parameters of the energy source, the energy transmission path, recording site and the ground motion spectra. Minimum qualifying requirements to perform the necessary documentation and analysis are as follows. A bachelor of science degree with accredited course work in at least three of the following disciplines: Seismology, Geophysics, Geophysical Data Processing, Geomechanics, Geophysical Engineering, Vibration Engineering, Soil and/or Rock Mechanics, Foundation and/or Explosive Engineering, Advanced Calculus, Time-Series (Fourier) Analysis.

3.2.5.4 Seismologist/Blasting Consultant duties. The Seismologist/Blasting Consultant will direct and instruct the Contractor in his operations to control vibrations within acceptable levels. The Seismologist/Blasting Consultant shall be in charge of making the preliminary blast survey and unless otherwise permitted in writing, shall be present at the site of the blasting during all blasts. The Seismologist/Blasting Consultant shall provide and utilize all necessary equipment to observe and record vibrations to ascertain that acceptable levels of vibrations are not exceeded. The Seismologist shall monitor, report his findings, and submit his recommendations on a daily basis to the Engineer. He shall determine the level of observed vibrations attributed to the project's blasting activities and their subsequent effect on surrounding structures.

3.2.5.5 Pre-blast condition survey. The Seismologist or Blasting Consultant shall conduct a pre-blast condition survey of all existing structures and conditions on the site, adjacent to the site, or in the vicinity of the site. This survey shall extend to such structures or conditions as may be affected by the Contractor's construction operations As a minimum, condition surveys shall be performed on all structures (including swimming pools and mobile homes) within 500 feet of anticipated blasting areas.

3.2.5.5.1 The pre-blast condition survey shall consist of a written description of the interior and exterior condition of each of the structures examined. Descriptions shall locate any existing cracks, damage, or other defects and shall include such information so as to make it possible to determine the effect, if any, of the construction operations on the defect. Where significant cracks or damage exists, or for defects too complicated to describe in words, photographs shall be taken. A good quality videotape survey with appropriate audio description of locations, conditions, and defects can be used. Prior to the start of work, a copy of the pre-blast condition survey shall be submitted to the Engineer for review.

3.2.5.5.2 The Seismologist or Blasting Consultant shall give written notice to the owner of the property concerned, tenants of the property, and any representative of local authorities required to

be present at such survey. The notice shall state the dates on which surveys are to be made. Copies of all notices shall be provided to the Engineer.

3.2.5.5.3 Prior to the start of blasting activities, the Contractor shall place an advertisement in the local newspaper and provide a notice to adjacent property owners and tenants identifying the project, blasting contractor, site location, warning signals and precautions being taken by the blasting contractor to minimize disturbance to residents.

3.2.5.5.4 Upon completion of all earth/rock excavation and blasting work, the Contractor shall conduct a post-blast survey of any properties, structures, and conditions where complaints of damage have been received or damage claims have been filed. Notice shall be given to all interested parties so that they may be present during the final examination. Records of the final examination shall be distributed the same as the original pre-blast condition survey.

3.2.5.6 Vibration monitoring instrumentation. All vibration monitoring instrumentation proposed for use on the project by the Contractor shall comply with the following characteristics:

a) Measure, display, and provide a permanent record on a strip chart of particle velocity components.
b) Measure the three (3) mutually perpendicular components of particle velocity in directions vertical, radial and perpendicular to the vibration source.
c) Have a velocity frequency response of 2 Hz to 150 Hz, and be capable of measuring peak particle velocity of up to 10 inches per second.
d) All seismographs used on the project shall display the date of the most recent calibration.
e) Calibration must have been performed within the last 12 months and must be performed to a standard traceable to the National Bureau of Standards.

3.2.5.7 Report of Monitoring Results.

3.2.5.7.1 Following each blast, the Contractor shall immediately report the measured vibrations to the Engineer. In the event seismic vibrations caused by the Contractor's operations approach the established limits for this project, the Engineer may require the Contractor to modify his blasting operations to reduce the vibrations. If the seismic ground vibration and/or air concussions caused by the Contractor's blasting operation attain or surpass the established limits, the operations shall cease. Blasting shall not be resumed until measures have been taken to reduce, to the satisfaction of the Engineer, the produced vibrations and/or air concussions below established limits. The seismologist or blasting consultant should assist the Contractor in the design of his blasting to eliminate the problems and to avoid liability claims.

3.2.5.7.2 Within 24 hours following each blast, the Contractor shall submit to the Engineer in writing the following items:

a) Details of the round as shot to include the information shown on the sample blasting log (see Figure 203-1)
b) Results of blast monitoring at each instrument location, including peak particle velocity in inches per second (in/sec), as well as a copy of the strip chart recording for each monitoring

location, marked with the date, time, location of the equipment, and signature of seismograph operator.

3.2.5.8 Pre-blast meeting. A pre-blast meeting shall be held prior to the start of any drilling or blasting activities. The purpose of the meeting shall be to review the blasting procedures and vibration monitoring requirements, and to facilitate coordination between all parties involved. Individuals attending the pre-blast meeting should include the Project Engineer, the Contractor, the Contractor's seismologist or blasting consultant, the Contractor's Blaster, the research geologist, any utility affected by the blasting operation, and any other personnel the Engineer deems appropriate.

3.2.5.9 Blast scheduling. The Contractor shall notify the Engineer of blast round schedules in accordance with the following requirements:

a) At least 24 hours in advance, notification of estimated time of blast.
b) At 30 minutes prior to a blast give a stand-by notification.

3.2.5.10 Warning signals. Adequate warnings shall be given to all personnel in proximity to the blast site at least 3 minutes in advance of each blast. The Contractor shall use sirens and/or horns with sufficient intensity such that they can be heard for a minimum distance of 1,000 ft.

3.2.5.11 Flyrock control. Before the firing of any blast in areas where flying rock or debris may result in personal injury or damage to property, the rock to be blasted shall be covered with approved blasting mats, soil, or other equally serviceable material, to prevent flyrock. The method of flyrock control shall be subject to approval by the Engineer.

3.2.5.12 Responsibility for blasting operations. Review of the Contractor's blasting submittals by the Department or its Engineer shall not relieve the Contractor of his responsibility for the accuracy, adequacy, and safety of the blasting; exercising proper supervision and field judgement; preventing damage to structures; and producing results within the limits required by the State of New Hampshire regulations and these Specifications. The Blasting Contractor shall be solely and completely responsible for the safety of all persons and property during the performance of his work. The Contractor shall take whatever measures he deems necessary, in addition to the requirements herein, to protect the safety of persons and property, both at the construction site and away from the site. The Contractor shall have full and complete responsibility for handling, discharging or settling of any and all damage or annoyance claims resulting from the blasting activities on the project. Any monitoring and/or review of the Contractor's procedures and performance conducted by the Department or its Engineer shall not relieve the Contractor of his responsibility for safety at and away from the site, and for preventing damage to adjacent structures or property.

3.3 Presplitting.

3.3.1 Presplitting will be required in rock slopes where the designed slope is 1:2 or steeper and the rock is 10 feet or more in depth above the subgrade, measured along the slope.

3.3.2 Presplitting is defined as the establishment of a free surface of a shear plane in rock by the controlled usage of explosives and blasting accessories in appropriately aligned and spaced drill holes so that the resulting split rock will not be affected by subsequent blasting and excavation operations adjacent thereto. The purpose of presplitting is to minimize damage to the rock backslope helping ensure long-term stability. When presplitting, the detonation of the presplit line shall be before detonation of any production holes. Production blasting refers to the main fragmentation blasting resulting from more widely spaced production holes drilled throughout the main excavation area adjacent to the presplit line. Production holes shall be detonated in a controlled delay sequence.

3.3.3 Prior to drilling, all overburden and all loose and disintegrated rock shall be removed down to solid rock in the vicinity of the presplit lines as shown on the plans. Potentially dangerous boulders beyond the excavation limits shall also be removed as ordered.

3.3.4 Presplitting shall extend a minimum of 50 feet ahead of the limits of fragmentation blasting within the section, unless otherwise permitted.

3.3.5 Unless otherwise approved, holes not greater than 3 inches in nominal diameter, and spaced 36 inches on center, shall be drilled along the presplit line and at the required slope inclination to the full depth of the cut or to a predetermined stage (lift) elevation. The proper angle of drilling shall be maintained at all times so that each presplitting hole is parallel to its adjacent one and does not deviate more than 1 foot in 35 feet, neither in the plane of the specifed slope line nor in its vertical alignment. The toe of the completed slope shall coincide, within those limits, with the toe of the slope shown on the plans. All drilling equipment used to drill presplit holes shall have mechanical or electrical devices affixed to the equipment to accurately determine the angle at which the drill steel enters the rock, unless alternate methods for aligning the drill steel are approved by the Engineer.

3.3.6 Presplitting holes shall not exceed 35 feet in depth unless permitted. Rock deeper than 35 feet shall usually be presplit in lifts, but no lift shall be less than 10 feet in depth. No payment will be made for additional excavated quantity caused by offsetting of presplit holes beyond the specified presplit lines in the top or successive lifts. Presplitting holes in successive lifts will be designed to offset 2 feet inside of the previously presplit face.

3.3.7 Before placing the charge, each hole shall be inspected and tested for its entire length to ascertain the possible presence of any obstructions. No loading will be permitted until the hole is free of all obstructions for its entire depth. All necessary precautions shall be exercised so as to prevent debris from falling into holes prior to loading and so that the placing of the charge will not cause caving of material from the walls of the holes.

3.3.8 The spacing of the blasy holes specified above, the distribution and type of explosives, methods of detonation, and blasting techniques specified below shall be adjusted as necessary according to the breakage characteristics and structure of the bedrock encountered so as to presplit the rock along the required face.

3.3.8.1 Results of presplitting shall be exposed for the Engineer’s examination and evaluation.

Based upon the Engineer's judgement of results obtained during the progress of the excavation, changes ordered in drilling or blasting methods shall be implemented by the Contractor.

3.3.9 Continuous column cartridge explosives manufactured especially for presplitting shall be used for all presplitting. The maximum diameter of explosives used in presplit holes shall not be more than ½ the diameter of the presplit hole, unless otherwise approved. The bottom charge of a presplit hole may be larger than the line charges, but shall not be large enough to cause overbreak. The upper portion of all presplit holes, from the topmost charge to the hole collar, shall be stemmed.Unloaded and unstemmed guide holes (gs release holes), when used between presplit holes, shall be drilled in the same plane and to the same tolerance as the presplit holes. The guide holes shall extend the full depth of the lift, unless otherwise permitted.

3.3.9.1 If presplitting charges are fired with detonating cord, the cord shall extend the full depth of each hole. If full or fractional portions of dynamite cartridges are used with detonating cord, the dynamite shall be securely affixed to the cord.

3.3.10 All space in each blast hole not equipped by the explosive charges shall be filled with stemming material. Stemming material shall be clean stone chips or other approved angular granular material as shown below.

Required Grading of Stemming Material

Seive Size	**Percentage by Weight Passing**
3/8 inch	100
No. 4	20 - 25
No. 8	0 – 10

3.3.11 All presplit holes may be detonated simultaneously or delayed proviving the hole to hole delay is no more than 25 milliseconds. The detonation of presplit charges shall precede the detonation of adjacent fragmentation charges within the section by a minimum of 25 milliseconds.

3.3.12 The line of blast holes immediately adjacent to the presplitting slope holes shall be drilled 4 feet from and on a plane approximately parallel to the plane of the presplitting slope holes. No portion of these holes or any other blast holes will be permitted closer than 4 feet to the presplit lines. All precautions as necessary shall be taken so as to avoid fracturing the rock beyond the presplit face.

3.3.13 The Engineer may order the discontinuance of the presplitting operations when the rock formation is of such character that no apparent advantage is gained.

3.3.14 The Contractor may use cushion (trim) blasting if conditions warrant it and, in the opinion of the Engineer, satisfactory results are obtained during the test shot(s). Cushion blasting is similar to presplitting except that the detonation along the cut face shall be performed after the detonation of all production holes. Difference in delay time between the trim line and the nearest

production row shall not be greater than 75 milliseconds nor less than 25 milliseconds. With the exception the above criteria, requirements previously given for presplitting shall also apply to cushion blasting.

3.4 Unclassified excavation. When the excavation is unclassified, either in the proposal or by the Contractor's bid, the Contractor may make arrangements with the Engineer for the taking of sufficient measurements of the rock in its original position to enable subsequent determination of the quantity of rock involved in any overbreakage. If the Contractor elects not to make such arrangements, he shall have no claim for rock overbreakage.

3.5 Muck Excavation.

3.5.1 The excavation of muck shall be handled in a manner that will not permit the entrapment of muck within the backfill. The backfilling of the excavated area shall follow immediately behind the excavation of the muck in order that any soft material which is pushed ahead of the backfill can be removed. With muck removal, the Contractor shall allow the Engineer adequate opportunity to take all the necessary elevations and measurements for determining the volume removed.

3.5.2 Any suitable muck removed shall be incorporated in portions of the embankment slopes as directed, or used for other approved purposes.

3.6 Subgrade and Slopes.

3.5.1 Removal and replacement of unsuitable material. Where excavation to designed elevations results in a subgrade or slopes of unsuitable material, the Engineer will require the removal of the unsuitable material to such limits as he may direct. Muck shall be removed as shown or ordered. The backfilling shall be done with approved material and compacted to the design subgrade or slope lines unless otherwise ordered. Material placed in wet slopes shall be one of the following: (1) material meeting the requirements of 304.2; (2) rock, when rock is available from excavation, or (3) a mixture of both.

3.6.2 Backfill of over-excavated subgrade in rock. All over-excavated subgrade in rock shall be replaced with approved porous granular materials such as sand, gravel, broken rock, or any combination thereof. Non-porous materials will not be acceptable.

3.7 Embankments.

3.7.1 General. The Contractor shall place and compact embankment materials in full uniform layers at thicknesses specified below or ordered. Continuous leveling and manipulation shall be employed to ensure uniform density. Where end dumping is employed, embankment material shall be dumped on the layer of embankment being constructed and bulldozed ahead into place. End dumping over completed work which allows material to roll into place will not be permitted.

3.7.2 Backfill of holes. Holes resulting from the removal of stumps, boulders, and the like, within the zone of anticipated frost action shall be filled and compacted with material similar to that surrounding the hole.

3.7.3 Placing on steep slopes. Benching or terracing of slopes steeper than 3 to 1 shall be performed in conjunction with the placing of embankments abutting such slopes, in the manner directed.

3.7.4 Placing in unstable areas. Material used to backfill excavated muck shall consist of rock or granular material so graded that, of the material passing the No. 4 sieve, not more than 70 percent will pass the No. 40 sieve and not more than 25 percent will pass the No. 200 sieve. The material shall be placed in one continuous lift to a maximum elevation of 4 feet above the water level, unless otherwise directed.

3.7.5 Placing rock on roadway. Rock fragments in fills shall be placed in layers of such thickness as the Engineer may direct, and in no case in excess of 4 feet. The lifts shall be worked in such a manner as to close the voids with spalls and fines. When sufficient spalls or fines are not available to close the voids, earth shall be used to make a tight surface prior to placing the next lift.

3.7.6 Placing embankment material at pile locations. In areas where piling is to be driven, the embankment, unless otherwise permitted, shall be made and compacted before driving the piles. No rock fragments, boulders, or other solid material shall be placed where such material could interfere with pile driving operations.

3.7.7 Placing Earth on Roadway.

3.7.7.1 Earth shall be placed in layers the full width of the roadway, generally parallel to the finished grade. The layers shall not exceed 12 inches of loose depth unless otherwise directed. Each layer shall be spread to a uniform thickness and compacted to the required density prior to placing the next layer. Continuous grading or shaping shall be carried out concurrently with the compactive effort to ensure uniform density throughout each layer material. Embankment material to be placed adjacent to granular backfill shall be placed concurrently with the granular backfill to provide lateral support.

3.7.7.2 Embankments shall be graded at all times to ensure the run-off of water. Any saturation of non-porous materials due to the Contractor's selected method of operation will require the suspension of additional work on the area until rectification by drying, removing and replacing, or draining has restored the fill to a stable condition at the Contractor's expense.

3.7.8 Winter construction methods. No embankments shall be constructed on frozen earth materials. Each layer of material placed shall be compacted to the required density before it freezes. All frozen material shall be removed from the top of embankments prior to placing additional material. The frozen lumps of earth removed shall be placed outside of the limits of an assumed 1-1/2 to 1 slope from the break in the shoulder and inside the designed or ordered slope line. If the above specified conditions cannot be met, earthwork operations shall be suspended. In no case shall the scarifying or breaking up of frost be accepted instead of removal.

3.7.9 Backfill at structures. Backfill at structures shall conform to 504.3.4.3

3.7.10 Embankment foundation. Unless otherwise shown on the plans or ordered, where the existing ground is 3 feet or less below subgrade, the top 6 inches within the limits of the roadbed shall be compacted to the same density as that required of the first layer of material to be placed on it.

3.8 Density Requirements and Tests.

3.8.1 For all earth materials at least 95 percent of maximum density shall be obtained. The maximum density determination will be made as specified in AASHTO T 99. (Standard Proctor Test). The in-place density determination will be made by AASHTO T 191, (Sand Cone Method), AASHTO T 204 (Drive Cylinder Method), or by AASHTO T 238 and T 239, (Nuclear Method). If the required density cannot be achieved with the equipment at hand, the Contractor shall obtain whatever equipment is necessary to achieve the specified density. Manipulation of tills, silts, and clays, or any combination thereof, (including aeration where necessary) will be required to produce a stable fill of the required density.

3.8.2 Those materials which cannot be tested for maximum density in accordance with AASHTO T 99 may be tested for maximum density by the following procedure.

3.8.2.1 Test Strip Procedure. At the beginning of the compaction operation, the maximum density shall be determined by compacting a short control section or "test strip" at a suitable moisture content until no further increase in density can be obtained. The densities shall be obtained by the use of nuclear density testing equipment. A new test strip may be required by the Engineer where there is a significant change in the gradation of material being placed. Compacting of the test strip shall be done with an approved vibratory roller or compactor producing a dynamic force of at least 27,000 pounds.

3.9 Disposal of Surplus and Waste Material.

3.9.1 Definitions.

(a) Surplus material. Excess material from excavation beyond the minimum requirements of the project but otherwise suitable for use.

(b) Waste material. Material unsuitable for use in the work, except in noncritical areas.

3.9.2 If the material is surplus, written permission from the Engineer must be obtained before the Contractor may dispose of such material outside of the work.

3.9.3 When practicable and wherever directed, surplus and waste material shall be utilized for flattening slopes or for other grading within the project.

3.9.4 When specified on the plans, surplus material shall be hauled off the project for use elsewhere for highway purposes. Such material shall be placed in accordance with the appropriate specification.

3.9.5 In case it is impossible to dispose of all the surplus and waste material in the manner described above and when the contract does not contain the item of embankment-in- place, the remainder shall be disposed of as directed or permitted. It shall be the Contractor's responsibility to secure disposal areas for surplus and unsuitable material in case such areas are not shown on the plans.

3.9.6 If disposal of surplus and waste material is by burying, the cover material shall be graded and shaped as directed by the Engineer. Without special permission, slopes shall not be left steeper than 2:1. No disposal area shall be left in such condition that erosion might result in water pollution by silt or other deleterious substances. Areas shall be left in such shape and condition that material will not wash and block or obstruct drainage ways. If holes caused by settlement appear, they shall be filled as directed.

3.9.7 Unless otherwise ordered, disposal areas shall be covered with material capable of supporting vegetation and either fertilized and seeded with grass seed or planted with seedlings. Seedlings shall be set out in accordance with accepted horticultural practices as directed in the agreement.

3.9.8 Unless permission is given to preserve access roads to disposal areas adjacent to highways, such access roads shall be obliterated.

3.9.9 When the contract requires the removal of existing pavement but does not require recycling the contractor is encouraged to save this bituminous material for future reuse. This material is considered to be a valuable resource because of the residual asphalt contained in it. Therefore, no existing bituminous pavement removed shall be incorporated in the embankment. It also must be disposed of in accordance with the Department of Environmental Services Waste Management Division regulations.

3.10 Borrow.

3.10.1 Use of borrow. It shall be the Contractor's responsibility to schedule the excavation so as to incorporate all suitable materials in the work. Premature use of the item of borrow resulting in wasting of suitable excavation will cause the deduction from borrow of the quantity of suitable material wasted as determined by the Engineer.

3.10.2 Sources. Unless otherwise designated in the contract, the Contractor shall make its own arrangements for obtaining borrow and shall pay all costs involved. See 106.02. All sources of borrow, whether within the right-of- way or elsewhere, shall be approved in writing before any borrow is removed. Permission to remove material beyond the template lines within the right-of-way and adjacent thereto will be contingent on many factors and if permission is granted, it will be given by the Engineer only after review by all interested parties. Permission may be contingent, among other considerations, upon consent of the Contractor to leave regular and uniform slopes in the area. Slopes excavated beyond the template lines without authorization shall be refilled when ordered at no expense to the City. When permission to remove material beyond the template lines within the right-of-way is granted, the unit price of that material will be contingent upon material type agreed upon prior to authorization.

3.10.2.1 The Contractor shall notify the Engineer when an approved pit is stripped, if necessary, so that it may be cross-sectioned by the City forces. No material shall be removed prior to cross-sectioning or beyond the limits established and defined jointly by the Contractor and the Engineer. Pits shall be graded to permit accurate final cross sections to be taken.

3.11 Embankment-in-place. When the embankment is constructed under this item, all construction requirements herein shall apply except 3.10.1. Slopes excavated beyond the template lines without authorization shall be refilled when ordered, at no expense to the City.

3.12 Surcharges. When the item of borrow is included in the proposal and surcharges are required, the material removed after consolidation shall be properly placed in locations reserved for the excess material.

3.13 Impervious material shall be placed in 6 in maximum lifts and shall be compacted to at least 95 percent of the maximum dry density. During compaction, the moisture content of the impervious material shall be between 1 percent below and 3 percent above the optimum moisture content. The maximum dry density and the optimum moisture content shall be as determined by AASHTO T 99 (Standard Proctor Test).

3.13.1 Manipulation of the soil, as specified in 203.3.8.1, shall be required before compaction when the material's moisture content is beyond the limits specified above.

Method of Measurement

4.1 Excavation, embankment-in-place, borrow, impervious material, and rehandling surcharge material will be measured by the cubic yard in accordance with 108.01. Material removed from outside of template lines without prior approval will not be measured.

4.1.1 When the Contractor is directed to excavate beyond the template lines shown, the material removed will be measured under the appropriate excavation item.

4.2 When the item of embankment-in-place is included in the proposal, no measurements of any borrow pits will be made for the purpose of establishing pay quantities for any item and the item of borrow will not appear in the proposal.

4.3 When borrow is included in the contract, the amount to be paid will be computed by the common pit method as follows: All borrow, together with material for base courses when obtained from sectioned pits, will be totaled. All materials which are paid for by in-place measurement, all materials utilized for the Contractor's benefit and not incorporated in the work, all unauthorized fills and waste, and all material specified to be deducted from borrow will be subtracted from this total to give the net borrow quantity. See 3.1.6 and 3.10.1.

4.4 When the contract does not specifically provide for payment for embankment-in-place, the work of embankment construction will not be measured as such but will be considered incidental to borrow and to the various classifications of excavation.

4.5 Surcharges will be sectioned in place immediately prior to removal, and the designed or revised subgrade template will be used as the final section.

4.6 Where presplitting is required, excavated rock will be measured only to the slope and depth lines shown on the plans or ordered.

4.7 (NHDOT)

4.8 Where presplitting is not required, actual overbreakage of rock in the slopes will be measured and allowed to a maximum of 24 inches (measured horizontally) beyond the required slope lines where adequate cross-sections have been taken of the original rock in accordance with the provisions of 3.2.1 and 3.3. No allowance for overbreakage will be made below the subgrade elevation.

4.9 Where the Engineer determines that the removal of additional rock is necessary due to conditions clearly not attributable to the Contractor's methods of operations, the payment lines will be adjusted to the limits ordered, to include only rock actually removed within such limits.

4.10 Impervious material will be measured by the cubic yard of material placed within the lines shown on the plans or as ordered.

Basis of Payment

5.1 The accepted quantities of excavation and embankment will be paid for at the contract price per cubic yard for each of the pay items listed below that is included in the contract, with the following stipulations:

5.1.1 The item of embankment-in-place will be paid only for those materials for which payment is not specified under a separate item.

5.1.2 When surcharges are required, that portion of the surcharge ordered removed will be paid for as rehandling surcharge material.

5.1.3 Excavation of unstable materials in the slopes of roadway cuts will be paid for as provided in 585. Backfill of such slopes shall be with material meeting the requirements of 585 or approved ledge and will be paid for as 585 unless otherwise shown on plans.

5.1.4 Topsoil excavation will be paid for as common excavation except when overlying muck excavation, in which case such topsoil excavation will be full payment for excavating, transporting and stockpiling surplus topsoil at approved locations.

5.1.5 Roadside ditches adjoining excavated areas will be paid for as common, rock, or unclassified excavation, as appropriate, unless such ditches are shown on the plans or ordered to be paid for under another item.

5.1.6 When conflicting pay lines for more than one type of excavation exist in an area, payment will be made to the limits of each type of excavation in the following order of priority unless otherwise indicated on the plans:

(1) Common, Rock, Muck, or Unclassified Excavation
(2) Channel Excavation
(3) Structure Excavation
(4) Bridge Excavation

5.2 No payment will be made for materials used to shim unauthorized over-excavated areas back to designed slope lines and subgrade, or for materials placed outside of designed or ordered slope lines.

5.3 No payment will be made under the item of embankment- in-place, nor deduction made under the item of borrow, for materials used to backfill holes left by the authorized removal of stumps, boulders and the like.

5.4 No separate payment will be made for aeration, or compaction equipment or methods of operation.

5.5 Except for any extra work which may be ordered, payment for borrow or embankment-in-place will include all work required in connection with pits.

5.6 When common excavation is the only class included in the contract, any rock encountered will be paid for at a price equal to 5 times the unit price for common excavation, under item number 203.2.

5.7 When no item for muck excavation is contained in the contract, work conforming to that classification will be paid for as common excavation.

5.8 Benching or terracing performed under 3.7.3 will be subsidiary except that rock removed as ordered will be paid for under 203.2.

5.9 The accepted quantity of presplitting holes or extra drilled holes without explosives will be paid for at the contract unit price per linear foot, complete as specified, except that when no item for presplitting holes is included in the contract, such work will be subsidiary.

5.10 All costs incurred by the Contractor in maintaining a blasting log and in adopting revised blasting methods shall be considered incidental to the contract unit prices for rock excavation and presplit blasting.

5.11 The cost of all blast vibration control and monitoring, pre-blast condition surveys, post-blast surveys, blasting precautions and other protective measures necessary to prevent damage and the subsequent creation of claims in connection with blasting shall be included under Item 203.2.

5.12 The accepted quantity of impervious material will be paid for at the contract unit price per cubic yard complete in place. (Overhaul will not be paid for.)

Pay Items and Units:

203.1	Common Excavation	Cubic Yard
203.2	Rock Excavation	Cubic Yard
203.3	Unclassified Excavation	Cubic Yard
203.4	Muck Excavation	Cubic Yard
203.5	Borrow	Cubic Yard
203.51	Granular Borrow	Cubic Yard
203.52	Impervious Material	Cubic Yard
203.6	Embankment-in-place	Cubic Yard
203.7	Rehandling Surcharge Material	Cubic Yard
203.81	Presplitting Holes	Linear Foot
203.82	Extra Drilled Holes Without Explosives	Linear Foot

SECTION 204 -- DRILLING AND BLASTING ROCK

Description

1.1 This work shall consist of drilling and blasting rock for roadway and pipe construction.

Classification of Materials

2.1 Where used in these specifications, rock shall be construed to mean all solid rock which cannot be removed without blasting.

3.1 General

The Blasting Contractor's attention is directed to the rock drilling regulations adopted by the N.H. Department of Health and Human Services, Division of Public Health Services under the authority of the provisions of RSA 147:2 (Supp.).

The storage, handling, transportation and use of explosives shall conform with all Federal, State and local laws and regulations, including the rules and regulations of the Director of State Police and the provisions below.

The Blasting Contractor's attention is called to RSA 158:9-a (Supp.) which in part, provides that licenses must be obtained from the Director of State Police in order (1) to use, purchase, or transport explosives, or (2) to store explosives.

When the use of explosives is necessary for the prosecution of the work, the Blasting Contractor shall exercise the utmost care not to endanger life or property, including new work. The Blasting Contractor will be responsible for all damage resulting from the use of explosives.

All explosives shall be stored in a secure manner. All storage places shall be clearly marked. Explosives shall be stored in a magazine which shall be located in respect to buildings, railways, and highways in a manner as required by the Director of State Police.

The Blasting Contractor shall notify each property owner and public utility company having structures in proximity to the site of the work of his intention to use explosives. Such notice shall be given sufficiently in advance to enable the parties to take such steps as they may deem necessary to protect their property from injury.

Explosives shall be used only during daylight hours, shall be handled only by competent workmen, and particular care shall be taken to insure that no unexploded charges remain in the work.

All persons within the danger zone of blasting operations shall be warned and no blasting shall be done until the zone has been cleared. Sufficient flaggers shall be stationed outside the danger zone to stop all approaching traffic during blasting operations.

4.1 Blasting Operations

4.1.1 The Engineer shall, at all times, have the authority to prohibit or halt the Contractor's blasting operations if it is apparent that through the methods being employed, that the safety and convenience of the public is being jeopardized.

4.1.2 All blasting operations, including the storage and handling of explosives and blasting agents, shall be performed in accordance with the applicable provisions of the Standard Specifications and all other pertinent Federal, State, and local regulations. Whenever explosives are used, they shall be of such character and in such amount as is permitted by the State and local laws and ordinances and all respective agencies having jurisdiction over them.

4.1.3 The Contractor shall observe the entire blast area to guard against potential hazards before commencing work. The Contractor shall not be allowed to store explosives on the project site or on City owned property unless prior approval is granted by the Department.

4.1.4 Drill hole conditions may vary from dry to filled with water. The Contractor will be required to use whatever type(s) of explosives and/or blasting accessories necessary to accomplish the specified results.

4.2 Blasting Log

4.2.1 A blasting log must be completed daily for every primary blast and copies must be provided to the Engineer. An example of a typical blasting log is shown in Figure 204-1. The drilling contractor may use a different format for his blasting log if it has been approved by the Engineer.

4.3 Blast vibration control and monitoring.

4.3.1 The Contractor shall be required to comply with the blasting vibration limits established herein. The Contractor shall provide for monitoring of the blasting vibrations (both ground and air concussions) produced as a result of the construction activities and shall provide for a pre-blast condition survey of structures. The Contractor shall cooperate in adjusting his blasting procedures to maintain the vibration limits specified herein and to minimize vibration-related claims and complaints.

4.3.1.1 Vibration limits.

4.3.1.1.1 Ground Limits. The maximum peak particle velocity of ground vibration (in any of the three mutually perpendicular components of particle velocity) for above-ground, residential structures shall not exceed the following limits:

Ground Vibration

Peak Particle Velocity Inches/Sec

Type of Structure	*Frequencies Below 40 HZ*	*Frequencies 40 HZ or Greater*
Modern Homes -Drywall Interiors	*0.75*	*2.0*
Older Homes -Plaster on Wood Lath for Interiors	*0.50*	*2.0*

4.3.1.1.2 The maximum peak particle velocity of ground vibrations (in any of the three mutually perpendicular components of particle velocity) for non-residential structures shall not exceed 2.0 inches/sec.

4.3.1.1.3 The maximum peak particle velocity of ground vibrations (in any of the three mutually perpendicular components of particle velocity) for underground utilities shall not exceed 2.0 inches/sec. Buried pipelines and other utilities owned by private utility companies are sometimes subject to lower limiting values imposed by the owner.

4.3.1.1.4 Deteriorated structures or utilities, structures housing computers or other sensitive equipment, and manufacturing processes that are sensitive to vibrations may require lower peak particle velocity limits than stated in this specification.

4.3.1.1.5 Air concussion. The contractor shall conduct all blasting activities in such a manner that the peak airblast overpressure at all above ground, occupied structures in the vicinity of blasting does not exceed 128 decibels (dB).

4.3.1.1.6 If blast induced ground vibrations exceed the limits for maximum peak particle velocity, then alternative rock excavation techniques may be necessary. All non- explosive methods of rock excavation are subject to approval by the Engineer.

BLASTING LOG

FIGURE #204-1

*1. Company name:*_____

*2. Location of Shot (Station):*_____

*3. Shot #:*_____*4. Time:*_____*5. Date:*_____

*6. Weather:*_____
_____

*7. Wind Direction:*_____*8. Temperature:*_____

*9. Distance & Direction to Nearest Structure:*_____&_____

*10. Depth of Water (ft.):*_____

11. Total Explosives Allowed Per Delay Period:

$$\text{Weight of Explosive(s)} = \frac{[\text{Distance in Feet}]^2}{2500} = _____$$

*12. Diameter of Holes (in.): Production*_____*Presplit*_____

*13. Hole Depth (ft.):*_____

*14. Total # of Holes:*_____

*15. Drill Pattern - Burden x Spacing (ft.):*_____

*16. Type and Height of Stemming (ft.):*_____

*17. Depth of Sub-Drilling (ft.):*_____

*18. Mats or Other Protection Used:*_____

*19. Types of Explosive(s) Used: Presplit*_____
*Production:*_____

*20. Density of Explosive(s) Used:*_____

*21. Kind of Delay Periods:*_____

*22. Total # of Delay Periods:*_____

23. Length of Delay Periods (ms):_____

24. Total of Explosives Used (lbs.):_____

25. Maximum # of Holes Per Delay Period:_____

26. Maximum Amount of Explosive(s) Per Delay Period (lbs):___

$$27.\ \text{Powder Factor} = \frac{\text{Pounds of Explosives Per Hole}}{\text{Cubic Yards of Rock Per Hole}}$$

Powder Factor = _____

$$28.\ \text{Scale Distance} = \frac{\text{Distance in Feet}}{(\text{Weight Per Delay Period})^{0.5}}$$

Scale Distance = _____

29. Method of Firing:_____

30. # Series, Circuits:_____

31. Location of Seismograph:_____

_____

a. Distance from Shot and Direction:

b. Person Taking Reading:

c. Seismograph Reading:

d. Peak Sound Pressure Level:

e. Vibration Measurements:

Transverse

Vertical

Longitudinal

DIAGRAM OF SHOT

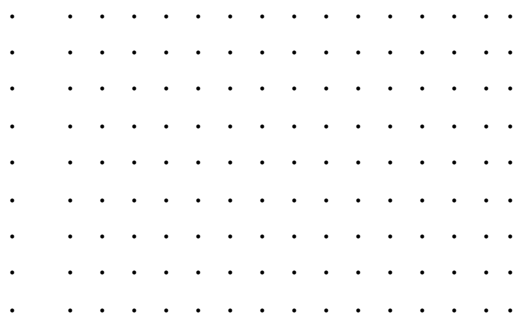

*Name of Blaster:*_____

*License Number of Blaster:*_____

4.3.1.2 Pre-blast condition survey. Blasting Contractor shall conduct a pre-blast condition survey of all existing structures and conditions on the site, adjacent to the site, or in the vicinity of the site. This survey shall extend to such structures (including swimming pools and mobile homes) or conditions as may be affected by the Blasting Contractors operations.

4.3.1.2.1 The pre-blast condition survey shall consist of a written description of the interior and exterior condition of each of the structures examined. Descriptions shall locate any existing cracks, damage, or other defects and shall include such information so as to make it possible to determine the effect, if any, of the construction operations on the defect. Where significant cracks or damage exists, or for defects too complicated to describe in words, photographs shall be taken. A good quality videotape survey with appropriate audio description of locations, conditions, and defects can be used. Prior to the start of work, a copy of the pre-blast condition survey shall be submitted to the Engineer for review.

4.3.1.2.2 The person conducting the pre-blast condition survey shall give written notice to the owner of the property concerned, tenants of the property, and any representative of local authorities required to be present at such survey. The notice shall state the dates on which surveys are to be made. Copies of all notices shall be provided to the Engineer.

4.3.1.2.3 Prior to the start of blasting activities, the Contractor shall place an advertisement in the local newspaper identifying the project, Blasting Contractor, site location, warning signals and precautions being taken by the Blasting Contractor to minimize disturbance to residents.

4.3.1.2.4 Upon completion of the blasting work, the Contractor shall conduct a post-blast survey of any properties, structures, and conditions where complaints of damage have been received or damage claims have been filed. Notice shall be given to all interested parties so that they may be present during the final examination. Records of the final examination shall be distributed the same as the original pre-blast condition survey.

4.3.1.3 Vibration monitoring instrumentation. All vibration monitoring instrumentation proposed for use on the project by the Contractor shall comply with the following characteristics:

a) Measure, display, and provide a permanent record on a strip chart of particle velocity components.

b) Measure the three (3) mutually perpendicular components of particle velocity in directions vertical, radial and perpendicular to the vibration source.

c) Have a velocity frequency response of 2 Hz to 150 Hz, and be capable of measuring peak particle velocity of up to 10 inches per second.

d) All seismographs used on the project shall display the date of the most recent calibration.

e) Calibration must have been performed within the last 12 months and must be performed to a standard traceable to the National Bureau of Standards.

4.3.1.4 Report of Monitoring Results.

4.3.1.4.1 Following each blast, the Contractor shall immediately report the measured vibrations to the Engineer. In the event seismic vibrations caused by the Contractor's operations approach the established limits for this project, the Engineer may require the Contractor to modify his blasting operations to reduce the vibrations. If the seismic ground vibration and/or air concussions caused by the Contractor's blasting operation attain or surpass the established limits, the operations shall cease. Blasting shall not be resumed until measures have been taken to reduce, to the satisfaction of the Engineer, the produced vibrations and/or air concussions below established limits.
4.3.1.4.2 Within 24 hours following each blast, the Contractor shall submit to the Engineer in writing the following items:

a) Details of the round as shot to include the information shown on the sample blasting log (see Figure 204-1)

b) Results of blast monitoring at each instrument location, including peak particle velocity in inches per second (in/sec), as well as a copy of the strip chart recording for each monitoring location, marked with the date, time, location of the equipment, and signature of seismograph operator.

4.3.1.5 Preblast meeting. A preblast meeting shall be held prior to the start of any drilling or blasting activities. The purpose of the meeting shall be to review the blasting procedures and vibration monitoring requirements, and to facilitate coordination between all parties involved. Individuals attending the preblast meeting should include the Project Engineer, the Blasting Contractor, the Contractor's Seismologist/Blasting Consultant, the Research Geologist and any other personnel the Engineer deems appropriate.

4.3.1.6 Blasting schedule. The Contractor shall notify the Engineer of blast round schedules in accordance with the following requirements:

a) At least 24 hours in advance, notification of estimated time of blast.

b) At 30 minutes prior to a blast give a stand-by notification.

4.3.1.7 Warning signals. Adequate warnings shall be given to all personnel in proximity to the blast site at least 3 minutes in advance of each blast. The Contractor shall use sirens and/or horns with sufficient intensity such that they can be heard for a minimum distance of 1,000 ft.

4.3.1.8 Flyrock control. Before the firing of any blast in areas where flying rock or debris may result in personal injury or damage to property, the rock to be blasted shall be covered with approved blasting mats, soil, or other equally serviceable material, to prevent flyrock. The method of flyrock control shall be subject to approval by the Engineer.

4.3.1.9 Responsibility for blasting operations. Review of the Contractor's blasting submittals by the Department or its Engineer shall not relieve the Contractor of his responsibility for the accuracy, adequacy, and safety of the blasting; exercising proper supervision and field judgement; preventing damage to structures; and producing results within the limits required by the State of New Hampshire regulations and these Specifications. The Blasting Contractor shall be solely and completely responsible for the safety of all persons and property during the performance of his work. The Contractor shall take whatever measures he deems necessary, in addition to the requirements herein, to protect the safety of persons and property, both at the construction site and away from the site. The Contractor shall have full and complete responsibility for handling, discharging or settling of any and all damage or annoyance claims resulting from the blasting activities on the project. Any monitoring and/or review of the Contractor's procedures and performance conducted by the Department or its Engineer shall not relieve the Contractor of his responsibility for safety at and away from the site, and for preventing damage to adjacent structures or property.

4.4 All drilling and blasting work performed by the Contractor shall produce slopes or configurations in reasonably close conformity with the lines, grades, cross- sections and dimensions shown on the plans.

4.5 All rock shall be removed from the proposed excavations by City forces in accordance with the Blasting Contractor's blasting schedule. The rock shall be sufficiently broken so that it may be conveniently handled by equipment at the disposal of the City.

Method of Measurement & Basis of Payment

5.1 Drilling operations shall be measured by the number of hours of actual drilling time. The hourly rate shall include the cost of a track drill, compressor and operator.

5.2 The Blaster shall be compensated at an hourly rate for the actual time performing blasting operations.

5.3 Powder shall be paid for by the pound for the actual number of pounds used to accomplish the work.

5.4 Blasting Caps shall be paid for per each for the actual number used to accomplish the work.

5.5 Blasting Mats shall be paid for by the day for the number of days they are used.

5.6 Seismic monitoring shall be paid for by the day for the number of days of actual monitoring.

5.7 Pre-blast Condition Surveys will be paid for at actual cost for each job site. Compensation for pre-blast surveys will be paid only upon submitted of "paid" invoices. No markups above the invoice will be allowed.

Pay Items and Units:

204.1	Drilling	Hour
204.2	Blaster	Hour
204.3	Powder	Pound
204.4	Blasting Caps	Each
204.5	Blasting Mats	Day
204.6	Seismic Monitoring	Day
204.7	Pre-blast Survey	Allowance

SECTION 205 -- REMOVAL OF STRUCTURES

Description

1.1 This work shall consist of the demolition, removal, and satisfactory disposal of buildings including contents, foundations, fuel storage tanks, and other obstructions pertaining thereto, as designated on the plans or in the contract.

1.2 Salvaging of designated materials, backfilling of any resulting trenches, holes, or pits including dug wells and cesspools, removing or breaking up, as ordered, of septic tanks, backfilling the resultant spaces, furnishing and erecting temporary barricades, and the final grading and cleaning up of the site shall be included under this work unless such work is included under other items in the contract.

Construction Requirements

2.1 General.

2.1.1 The Contractor's attentions is directed to 103.05 Rights In and Use of Materials Found on Project. The Contractor must also comply with all Federal, State and local laws and regulations as to removal, transportation and disposal of structures and obstructions. As ordered, the Contractor shall raze, remove, and dispose of all buildings and foundations, structures, fences, and other obstructions, any portions of which are on the right-of-way except utilities and those for which other provisions have been made for removal. All designated salvageable material shall be removed, without unnecessary damage, in sections or pieces which may be readily transported, and shall be stored by the Contractor at specified places within the project limits. Unusable perishable material shall be destroyed. Nonperishable material not designated for salvage shall be buried as directed or, with written permission of the property owner, may be disposed of off the project provided the material remains outside the limits of view from the project, other highways, and residences. Copies of all such agreements with property owners shall be furnished to the Engineer. If disposal is by burial on private land it must be in accordance with 105.10.

2.1.2 Blasting or other operations necessary for the removal of an existing structure or obstruction, which may damage new construction, shall be completed prior to placing the new work.

2.2 Demolishing Buildings.

2.2.1 In the case of buildings to be demolished, notice will be given the Contractor when any building becomes available, and upon notice of availability, ownership of the building or buildings, including all equipment, fixtures, building materials, and debris remaining on the lot, except plant belonging to a public or private utility company, shall transfer from the City to the Contractor.

2.2.2 A permit from the Manchester Building Department is required before the demolition of any building.

2.2.3 The Contractor shall ascertain whether any water, sewer, gas, electric, or telephone services are still connected to the building; if so, he shall disconnect and terminate them in compliance with the requirements of the controlling municipality or company and then proceed with the demolition of the building.

2.2.4 The Contractor shall protect all openings resulting from demolition or removal by use of temporary barricades as necessary for protection and safety of the public. All barricades and obstructions shall be illuminated at night when ordered.

2.2.5 Basements remaining in embankment areas shall be cleared of all interior partition walls, materials, equipment and debris. When directed, to provide vertical drainage, the floor shall be thoroughly broken up into pieces no larger than 4 square feet or shall be perforated at least every 10 feet, lengthwise and crosswise, with holes 1 square foot or more in area. Foundation walls generally shall be pushed in or removed to at least one foot below the adjacent ground level.

2.2.5.1 When the Engineer has ascertained that the above provisions have been complied with, the basement shall be filled to the level of the surrounding ground with the same type of materials as that found at the site, compacted as ordered.

2.2.6 When the buildings have been substantially demolished and removed by others, the Engineer may require the Contractor to remove and dispose of rubbish and debris, demolish foundations, break up cellar floors, clean the cellar of partitions and other materials, clean up the site, and grade, loam, seed, fertilize and mulch the area.

2.2.7 All materials that result from building demolition shall be disposed of by an approved method. The Contractor's attention is directed to RSA 149-M in that building demolition material is classified as a solid waste and as such shall be disposed of only in permitted sites. N.H. Department of Environmental, Division of Waste Management is the permitting agency.

2.3 Removal of Underground Storage Tanks and Hazardous Materials.

2.3.1 The Contractor shall perform all work as shown on the plans and specified in the contract.

2.3.2 Contractor's attentions is directed to the regulations which may affect the removal operations relative to contaminated soil identification, removal and disposal; tank removal, transportation and disposal; and site safety as follows:

National Fire Safety Code, Chapter 30, Appendix B
New Hampshire Hazardous Waste Rules He-P 1905
Water Supply WS 411

US Laws 49CFR 173.29 and 40CFR part 280

Method of Measurement

3.1 Individual buildings, or groups of buildings when such are designated as a separate unit, will each be measured as a unit. When more than one unit is specified in the contract, separate item numbers will appear for each separate and complete unit.

Basis of Payment

4.1 The following provisions are in connection with the item of demolishing buildings:

4.1.1 There will be no separate payment for the cost of any utility work including charges, if any, which may be made by the municipality and utility Companies.

4.1.2 The City cannot assume responsibility and must be held harmless for damage to buildings or losses of or from buildings between the date of advertising for bids and the time the Contractor can take possession.

4.1.3 Work performed under 2.2.5 and 2.3 will be paid for either under pertinent items of the contract or as provided under 108.04.

4.2 When no basis of payment for the removal of structures and obstructions shown on the plans is included in the proposal, such work will be subsidiary.

Pay items and units:

205.1	Demolishing Buildings	L.S.

SECTION 206 --STRUCTURE EXCAVATION FOR PIPES AND OTHER MINOR STRUCTURES

Description

1.1 This work shall consist of the excavation and backfill or disposal when necessary of all materials required to be removed to complete the work as shown on the plans or ordered. Excavation for the following shall be included under this item; inlet ditches and outlet ditches, drainage pipes, sewer pipes, manholes, catch basins, drop inlets, headwalls, conduits and channels with less than a 10 foot bottom width. Excavation for roadway ditches not adjoining roadway excavation will be included in this item unless otherwise specified.

Classification of Materials

2.1 Common Structure Excavation shall consist of all excavation described above which is not classified as rock structure excavation. Glacial till or boulder clay will be considered as common structure excavation.

2.2 Rock structure excavation shall consist of all solid rock which cannot be removed without blasting or ripping. It shall also consist of boulders and parts of masonry structures when found to measure 1 cubic yard or more except as provided in 604.5.2.2.

2.3 Unclassified structure excavation shall consist of all structure excavation encountered.

Construction Requirements

3.1 General

3.1.1 All excavations performed within City streets, rights-of-way and easements shall be governed by the City's Street Excavation Regulations, except as may be otherwise approved by the Engineer.

3.1.2 The contractor shall call DIG SAFE (1-800-225-4977) 72 hours prior to the start of excavation.

3.1.3 Where excavations are to be made through existing pavement, the pavement shall be saw cut ahead of the excavation in order to provide a clean uniform edge. The pavement shall be cut along lines 12 inches outside of the trench walls in order to minimize undermining. All existing paved areas shall be restored as specified in Section 404.

3.1.4 All excavation shall be open cut, unless otherwise specified or permitted by the Engineer, and shall be removed to the limits shown or ordered. The excavated material shall be incorporated in the work or disposed of as directed. See also 209.2.1.5.

3.1.5 Excessive widths of trench will not be permitted. The walls of trenches shall be kept as nearly vertical as practicable below the level of the top of the pipes. Trenches shall be shored in accordance with OSHA Regulations.

3.1.6 Unauthorized excavation below the specified depths shall be backfilled with approved material as specified in Section 209.

3.1.7 Unsuitable material shall be removed to the limits directed and replaced with approved material as specified in Section 209.

3.1.8 Unless otherwise permitted by the engineer, no more than one hundred (100) feet of trench shall be open at any time and in dry ground, at least thirty (30) feet of trench shall be excavated to within six (6) inches of specified subgrade in advance of the pipe laying.

3.1.9 Excavated or other material shall not be stored nearer than four (4) feet from the edge of any excavation and shall be so stored as to prevent its falling or sliding back into the excavation.

3.1.10 Sides, slopes and faces of all excavations shall meet accepted engineering requirements by scaling, benching, barricading, rock bolting, wire meshing or other equally effective means. Special attention shall be given to slopes which may be adversely affected by weather or moisture content.

3.1.11 Sides of trenches in hard or compact soil including embankments, shall be shored or otherwise supported when the trench is more than five feet in depth and eight feet or more in length. In lieu of shoring, the sides of the trench above the five foot level, may be sloped to preclude collapse, but shall not be steeper than one foot rise to each one half (1/2) foot horizontal. When the outside diameter of a pipe is greater than six feet, a bench of four feet minimum shall be provided at the toe of the sloped portion.

3.1.12 In locations where oxygen deficiency or gaseous conditions are possible, air in the excavation shall be tested. Controls shall be established to assure acceptable atmospheric conditions. When flammable gasses are present, adequate ventilation shall be provided or sources of ignition shall be eliminated. Attended emergency rescue equipment, such as breathing apparatus, a safety harness and line, basket stretcher etc., shall be readily available where adverse atmospheric conditions may exist or develop in an excavation.

3.1.13 Where people are required to be in trenches four (4') feet deep or more, ladders extending from the floor of the trench excavation to at least three (3') feet above the top of the excavation shall be provided and located to provide means of exit without more than twenty-five (25') feet of lateral travel.

3.2 Sheeting

3.2.1 The contractor shall be held responsible for the sufficiency of all sheeting and bracing used and for all damage to persons or property resulting from the improper quality, strength, placing, maintaining or removing of the same.

3.2.2 The engineer may require that structural calculations relative to supporting systems, i.e., piling, cribbing, shoring etc., be done by an engineer registered in the State of New Hampshire who shall be engaged as the contractor's representative. The engineer may also require that such shoring, bracing or underpinning be inspected daily or more often as conditions warrant, by the engineer in the employ of the contractor in order to insure that the protection is effectively maintained.

3.2.3 While the contractor is responsible for the safety of trenches, the engineer may require additional support for trench walls in the form of sheeting, walling and bracing whenever in his opinion, the safety of personnel, utilities, the work or property requires it.

3.2.4 Sheeting may be timber or steel adequately walled and braced as approved by the Engineer. Materials used for sheeting, sheet piling, cribbing, bracing, shoring and underpinning, shall be in good serviceable condition and timbers shall be sound, free from large or loose knots and of proper dimensions.

3.2.5 The use of trench boxes shall not be permitted in areas where any part of the foundations of adjacent structures are within an area determined by a line drawn from the trench bottom to the ground surface at a 1:1 slope. Where the stability of adjoining buildings or walls may be endangered by excavations, shoring, bracing or underpinning shall be provided as necessary to ensure their safety.

3.2.6 If it is necessary to operate heavy equipment or store heavy materials on a level above and near an excavation, the side of the excavation shall be sheet piled, shored and braced as necessary to resist the extra pressure due to such superimposed loads.

3.2.7 Sheeting shall be driven ahead of the excavation to avoid loss of material from behind the sheeting. If voids occur behind the sheeting they shall be immediately filled with approved material and compacted.

3.2.8 When tie rods are used to restrain the top of sheeting or other retaining systems, the rods shall be securely anchored well back of the angle of repose.

3.2.9 When tight sheeting or sheet piling is used, full loading due to groundwater table shall be assumed unless prevented by weep holes, drains or other means.

3.2.10 Additional stringers, ties and bracing shall be provided to allow for any necessary temporary removal of individual supports.

3.2.11 All sheeting and bracing not left in place shall be carefully removed so as not to disturb or endanger the work or other structures. All voids shall be immediately

backfilled with approved material and compacted. Where sheeting is ordered to be left in place, it shall be cut off at least three feet below finished grade, but no less than one foot above the top of the pipe.

3.3 Rock Structure Excavation

3.3.1 The contractor's attention is called to the following rock drilling regulations adopted February 2, 1970, by the N.H. State Department of Health & Welfare, Division of Public Health under authority of the provisions of RSA 147:2 (Supp).

3.3.2 Use of Explosives. See 106.10.

3.3.3 Blasting Operations. See 203.3.2.2.
3.3.4 Drilling and Blasting Rock. See 204.

Method Of Measurement

4.1 Structure excavation will be measured by the cubic yard in accordance with 108.01.

4.1.1 The lower limits shall be 6 inches below the bottom of the outside of the pipe barrel or structure in earth and 12 inches below the bottom of the outside of the pipe barrel or structure in rock, as designated in Figure 209-1, or as provided below. (The term "bottom of the outside of the pipe barrel" shall mean the nominal manufactured wall thickness of the wall below the flow line, with nothing extra for bells and beads.) The upper limits shall be the original ground or rock surface. Common structure excavation for pipes, manholes, catch basins and drop inlets shall be subsidiary except as provided below.

4.1.1.1 The depth of unsuitable material removed as directed below grade will be measured for payment. In case the width ordered is wider than the specified payment limits in 4.1.2, the extra excavation will be measured in accordance with Figure 1.

4.1.1.2 When excavation is required to place the pipe or structure more than 1 foot deeper than the excavation shown on the plans, the depth of excavation below such limit will be measured for payment.

4.1.2 Unless otherwise shown on the plans, the horizontal limits shall be as follows for pipes:

Inside Diameter	Total Width
Up to 12 inches	36 inches
12 inches to 24 inches	I.D. + 24 inches
Over 24 inches	2 x I.D.

4.1.3 The horizontal limits for end sections shall be the same as the pipe to which they are attached.

4.1.4 The horizontal limits for structures such as manholes, catch basins, headwalls and the like will be 1 foot outside of the base of the masonry and parallel or concentric hereto.

4.2 All material classified as rock encountered within the neat lines established under this section will be measured. No payment will be made for any overbreakage below or beyond the limits specified.

4.3 In case a conflict of horizontal limits exists in payment lines as where a pipe enters a manhole, the greater limit will be used for computing the quantity.

4.4 Sheeting where ordered and/or approved satisfactorily driven, waled and braced will be measured by the engineer in place, by the square foot from the bottom of the trench excavation to the top of sheets or existing grade, whichever is less. Each side of the trench shall be measured for payment.

4.5 Sheeting left in place where ordered and/or approved and satisfactorily driven will be measured by the engineer by the square foot from the bottom of the trench to the top of sheet left in place. Each side of the trench shall be measured for payment.

Basis Of Payment

5.1 The accepted quantity of excavation will be paid for at the contract unit price per cubic yard.

5.2 Backfill or bedding material specified or ordered will be paid for under Section 209.

5.3 When common structure excavation is the only class included in the contract, any rock encountered will be paid for at a price equal to five times the unit price for common structure excavation under Item 206.2.

5.4 When structure excavation items are included in the contract, but no items for exploratory purposes are in the contract, payment for excavation made for investigations or exploratory purposes will be paid for under Item 206.19 at five times the unit price for the class of excavation encountered.

5.5 If neither 206.1 nor 206.2 nor an item for exploratory purposes is included in the contract, any structure excavation encountered, including excavation for investigation or exploratory purposes, will be paid in accordance with the provisions of 108.04 (extra work).

5.6 The contractor will be paid the contract unit price per square foot of sheeting and/or sheeting left in place which price shall constitute full compensation for all materials, labor, equipment and incidental work necessary for the satisfactory completion of this work.

5.7 When structure excavation is specified as included in another item, no separate payment will be made for such work in connection with that item.

5.8 No separate payment will be made for pre-blast and post blast surveys or blasting monitoring work.

Pay items and units:

206.1	Common Structure Excavation	C.Y.
206.19	Common Structure Excavation, Exploratory	C.Y.
206.2	Rock Structure Excavation	C.Y.
206.3	Sheeting	S.F.
206.39	Sheeting Left-in-place	S.F.

UNSUITABLE EXCAVATION

CROSS HATCHED AREAS SHOWN
ARE PAYMENT AREAS

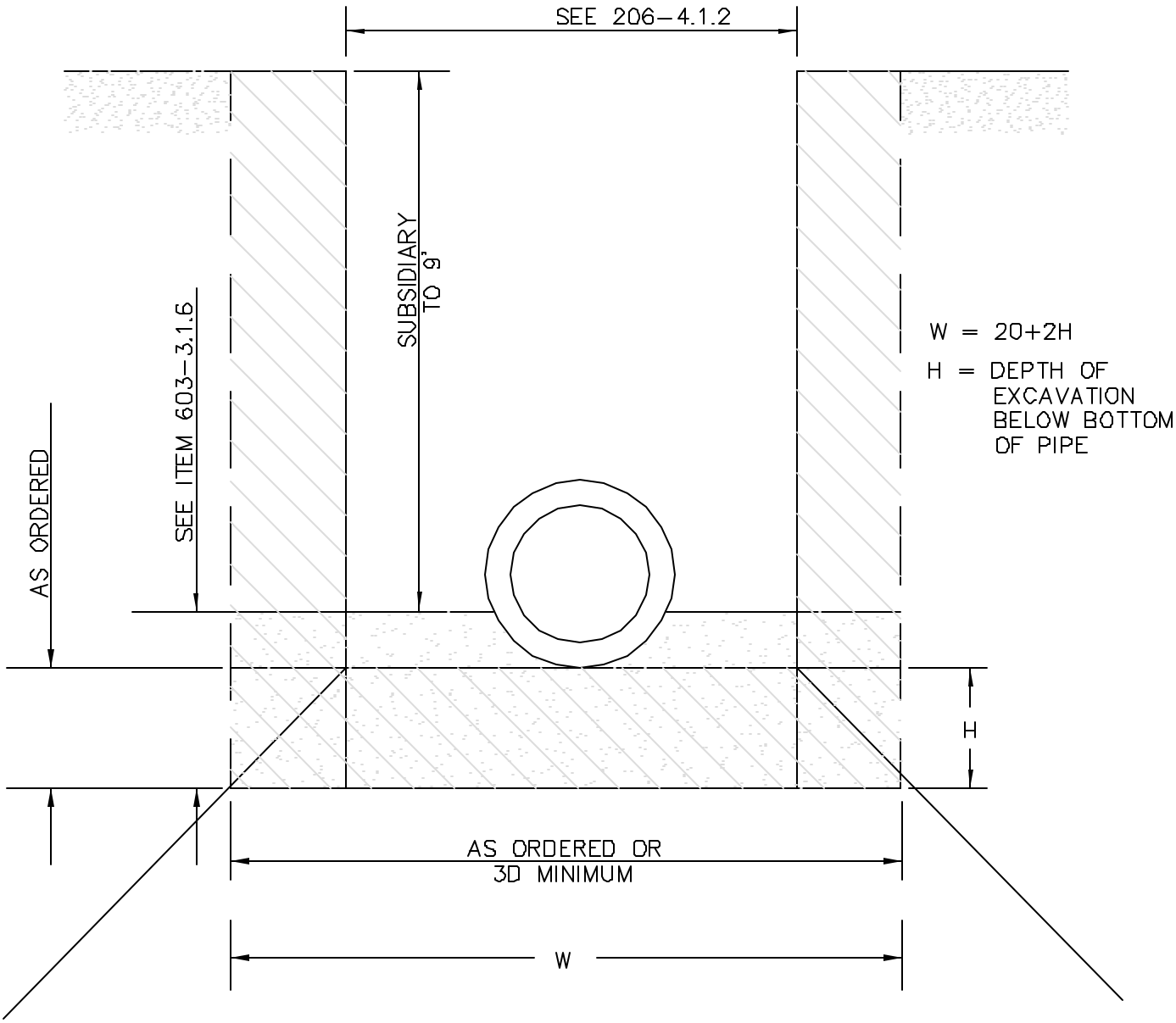

UNSUITABLE EXCAVATIONS

S:\DWG\DETAILS\206-1 CLVRT-UE.DWG

NOT TO SCALE
FIGURE 206-1

SECTION 209 -- BEDDING & BACKFILL

Description

1.1 This work shall consist of furnishing and placing bedding and backfill under and around pipes and other minor structures at the locations shown on the plans or ordered.

Materials

2.1 The materials shall consist of stones, rock fragments and fine hard durable particles resulting from the natural disintegration of rock. Materials that break up when alternately frozen and thawed or wetted and dried shall not be used for bedding or backfill. The materials shall be free from injurious amounts of organic material and shall conform to the following gradations:

2.1.1 Sand. One-hundred (100) percent shall pass the one (1) inch sieve, Eighty-five to one hundred percent shall pass the No. 4 sieve and not more than five percent of the material passing the No. 4 sieve shall pass the No. 200 sieve.

2.1.2 Screened Gravel. One hundred percent shall pass the one (1) inch sieve, ninety to one hundred percent shall pass the three quarter (3/4) inch sieve, twenty to fifty-five percent shall pass the three eights (3/8) sieve, zero to ten percent shall pass the No. 4 sieve and zero to five percent shall pass the No. 8 sieve.

2.1.3 Granular Backfill. Not more than 15 percent of the material passing the No. 4 sieve shall pass the No. 200 sieve and the material shall conform to the following gradations.

2.1.3.1 Granular backfill-sand consist primarily of particles with 100 percent passing the 3 inch sieve and 70 to 100 percent passing the No. 4 sieve.

2.1.3.2 Granular backfill-gravel shall consist of a mixture of stones or rock fragments and particles with 95 to 100 percent passing the 3 inch sieve and 25 to 70 percent passing the No. 4 sieve.

2.1.4 Crushed stone shall be one-half (1/2) inch to three quarter (3/4") inch in size.

2.1.5 Backfill material shall consist of material excavated during the course of construction or suitable material from another source, as determined by the engineer.

Construction Requirements

3.1 Bedding.

3.1.1 Bedding material for sewers shall be screened gravel or crushed stone as ordered by the Engineer and shall meet the requirements of 2.1.2 and 2.1.4. Bedding

material for reinforced concrete drain pipes shall be granular backfill meeting the requirements of 2.1.3 and approved by the Engineer.

3.1.1.1 The minimum depth of bedding shall be six (6) inches below the bottom of the outside of the pipe barrel or structure in earth and twelve (12) inches below the bottom of the outside of the pipe barrel or structure in rock. See 206.4.1.1.

3.1.1.2 Bedding material shall be spread the full width of the trench and shall extend up to a level of one half (1/2) the diameter of the pipe barrel.

3.1.1.3 Care shall be exercised to thoroughly compact the bedding under the haunches of the pipe and to insure that the bedding is in intimate contact with the sides of the pipe.

3.2 Sand Cushion.

3.2.1 Sand cushion material shall meet the requirements of 2.1.1.

3.2.1.1 For sewers, sand cushion material shall be spread the full width of the trench and shall extend a minimum of twelve (12") inches above the top of the outside of the pipe barrel or as approved.

3.2.1.2 Suitable backfill material may be substituted for the sand cushion over reinforced concrete and ductile iron pipes provided that no stones larger than 2 inches will be in contact with the pipe, and as specifically approved by the Engineer.

3.3 Backfill.

3.3.1 Backfill material shall be free from debris, pieces of pavement, frozen material, organic matter, topsoil, clay and pieces of ledge or rocks larger than six (6") inches.

3.3.1.1 Backfill materials shall be placed in compacted layers not to exceed a depth of 6 inches.

3.3.1.2 Care shall be taken to ensure that the first 2 to 3 feet of backfill above the sand cushion over Poly Vinyl Chloride (PVC) pipes is placed carefully rather than dropped, so as to avoid damaging the pipe from impact during placement.

3.4 Compaction.

3.4.1 All bedding, sand cushion and backfill materials shall be compacted at near optimum moisture content, in layers not exceeding 6 inches in compacted thickness, by pneumatic tampers, vibratory compactors, or other approved means. Care shall be exercised to thoroughly compact the bedding material under the haunches of the pipe and to insure that the compacted backfill is in direct contact with the sides of the pipe.

Bedding and backfill materials shall be compacted to not less than 95 percent of AASHTO T99, Method C.

Method Of Measurement

4.1 Bedding and backfill materials will be measured by the cubic yard of compacted material placed within the lines shown on the plans or as ordered.

4.1.1 Backfill of over-excavated areas beyond or below the lines and grades shown or ordered will not be measured for payment.

4.1.2 No deduction will be made from bedding and backfill of the volume occupied by the pipe.

Basis of Payment

5.1 The accepted quantity of bedding and backfill materials will be paid for at the contract unit price per cubic yard complete in place.

5.1.1 No extra payment will be made for suitable backfill material from another source when such material is ordered by the Engineer. See 209.2.1.5.

5.1.2 When bedding and backfill are included in another item, no separate payment will be made for such material in connection with that item.

Pay items and units:

209.1	Sand for Sand Cushion	Cubic Yard
209.2	Screened Gravel	Cubic Yard
209.3	Granular Backfill (Sand)	Cubic Yard
209.4	Granular Backfill (Gravel)	Cubic Yard
209.5	Borrow for Trench Backfill	Cubic Yard
209.650	1/2" Crushed Stone	Cubic Yard
209.675	3/4" Crushed Stone	Cubic Yard

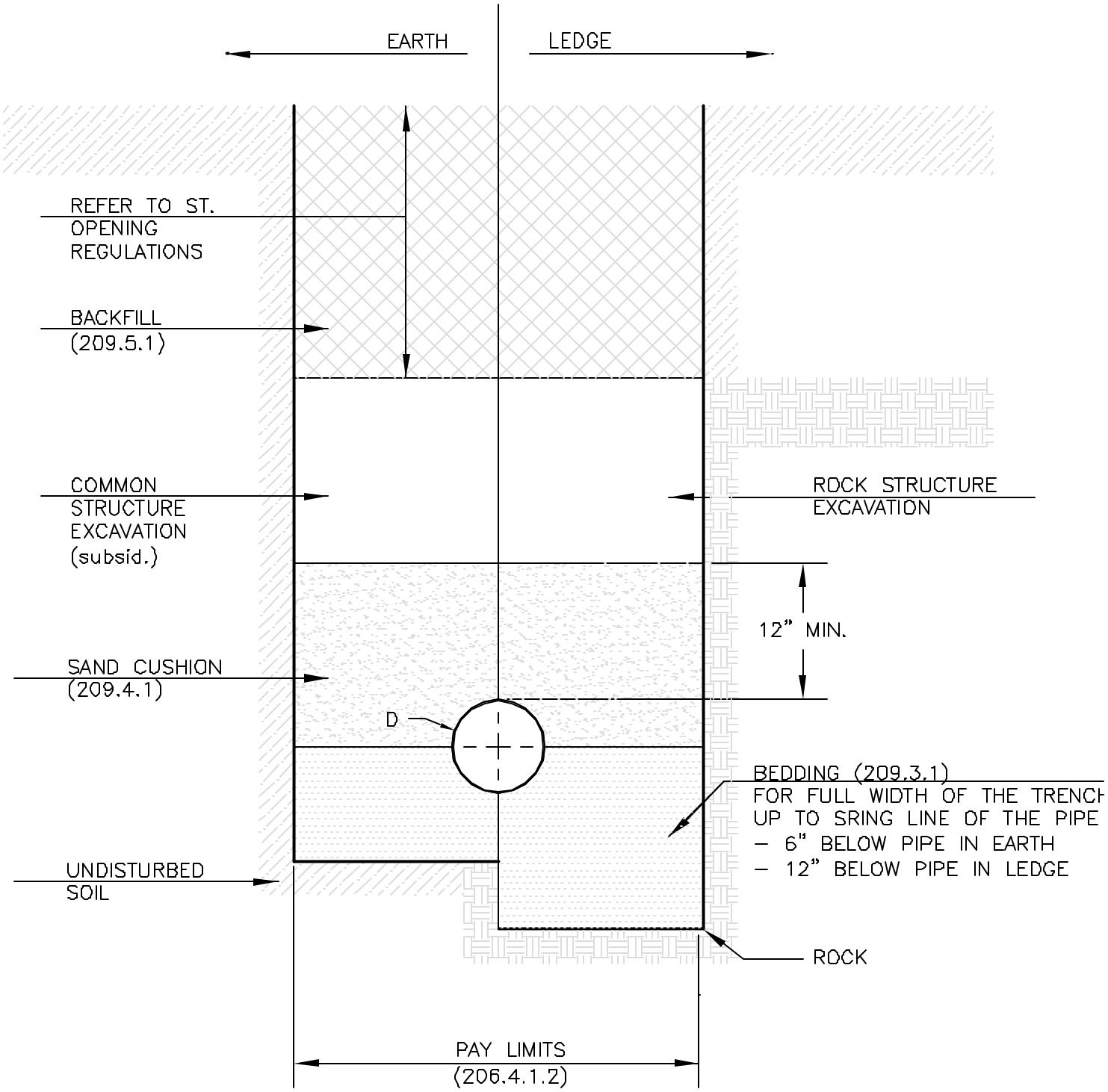

EXCAVATION PAY LIMITS FOR TRENCHES

S:\DWG\DETAILS\209-1 PayLimits.dwg

NOT TO SCALE

FIGURE 209-1

SECTION 214 -- FINE GRADING

Description

1.1 This work shall consist of the final grading necessary to make the subgrade, the area under the surface course, the roadway outside the surface course, and other locations as directed by the Engineer conform to the lines shown on the plans or established by the Engineer.

Construction Requirements

3.1 The surface of each course of material shall be fine graded to conform to the typical section of the plans prior to placing the succeeding course.

3.2 Shoulders, slopes, and ditches shall be shaped with suitable machinery supplemented by hand labor to reasonably smooth surfaces that will be in keeping with the character of the adjacent terrain and merge into it without any noticeable break. Culverts and waterways shall be cleared of all obstructions. Rubbish, brush, loose rock, boulders, and all other debris from the construction work shall be removed and disposed of as directed.

3.3 To be acceptable under this item, the entire project area must present a uniformly finished appearance at the completion of the work.

Method of Measurement

4.1 Fine grading will be measured as a unit. If the project is altered to require substantial changes in the length, width, or character of the fine grading from such length, width, or character shown on the plans, the contract lump sum price will be subject to a negotiated revision.

Basis of Payment

5.1 The accepted quantities will be paid for at the contract lump sum price for fine grading not otherwise classified.

5.2 When no quantity for this item is included in the contract, this work shall be subsidiary.

Pay items and units:

214	Fine Grading	Lump Sum

DIVISION 300 – BASE COURSES

SECTION 304 -- AGGREGATE BASE COURSE

Description

1.1 This work shall consist of furnishing and placing base courses on a previously prepared subgrade or course as shown or ordered.

Materials

2.1 General.

2.1.1 The materials shall consist of hard durable particles or fragments of stone or gravel. Materials that break up when alternately frozen and thawed or wetted and dried shall not be used for aggregate base course materials. Fine particles shall consist of natural or processed sand. The materials shall be free from injurious amounts of organic material.

2.1.2 Crushed stone and crushed ledge rock shall be processed material obtained from a source which has been stripped of all overburden. The processed material shall consist of clean durable fragments of ledge rock of uniform quality reasonably free of thin or elongated pieces.

2.1.3 Recycled bituminous pavement shall consist of pulverized pavement blended with gravel or crushed gravel and shall have a bitumen content of 3 percent (See Section 306).

2.2 Gradation. The required gradation of base course material shall conform to Table 304-1. The required gradation of recycled bituminous pavement shall conform to 306.2.1.1.

2.3 Sand. The maximum size of any stone or fragment shall not exceed 3/4 of the compacted depth of the layer being placed but in no case larger than 6 inches.

2.4 Gravel. The maximum size of stone particles shall not exceed 3/4 of the compacted thickness of the layer being placed but in no case larger than 6 inches.

2.5 Crushed gravel. At least 50 percent of the material retained on the 1 inch sieve, shall have a fractured face.

2.5.1 When the quantity of crushed gravel in the proposal is 5,000 cubic yards or less, the fractured faces requirement and the grading requirements for the 1 inch sieve for crushed gravel may be waived, to permit the use of Modified Crushed Gravel. See Table 304-1 for gradation.

2.6 Crushed gravel for unpaved drives. This item shall be used for the surface course of drives which are not designated to be paved. The material shall meet the gradation requirements of either crushed gravel or crushed stone (fine) as shown in Table 304-1.

2.7 Crushed stone base course (fine gradation). Acceptable sand may be blended as necessary to obtain the proper gradation for the fine aggregate portion.

2.8 Crushed stone base coarse (coarse gradation). Acceptable sand may be blended as necessary to obtain the proper gradation for the fine aggregate portion.

2.8.1 The substitution of crushed stone meeting the gradation requirements of crushed stone base course (fine gradation) for all or part of this item will not be permitted.

2.9 Recycled bituminous pavement. Additional crushed gravel shall meet the requirements of Table 304-1. Additional asphalt shall meet the requirements of 702, as specified.

Construction Requirements

3.1 General.

3.1.1 Upon approval, base course materials found within the project limits may be used under the specific item in accordance with 103.05 of these specifications.

3.1.2 Permission may be given to substitute gravel or a mixture of sand and gravel for any sand course when sand is designed as part of the base. The substitution must be made across the entire section and will not be allowed for short or discontinuous segments.

3.1.3 Permission may be given to substitute crushed gravel for gravel or crushed stone (fine gradation) for crushed gravel. The substitution must be made across the entire section and will not be allowed for short or discontinuous segments.

3.1.4 Permission may be granted to use reclaimed stabilized base in lieu of crushed gravel or crushed stone base course (fine grading) providing that the material meets the requirements of Section 306 – Reclaimed Stabilized Base.

3.1.5 Crushed aggregate base course material shall be produced and placed in its final location with as little segregation as possible.

3.2 Aggregate Crushing Plant.

3.2.1 The equipment for producing crushed gravel shall be of adequate size and with sufficient adjustments to produce the required materials without unnecessary waste. The

plant shall be capable of removing excess sand. The engineer may order final screening of crushed aggregate if flat and elongated pieces are present in objectionable amounts.

3.2.2 The equipment for producing crushed stone and crushed ledge rock shall consist of sufficient units with sufficient adjustments to produce the required material. The plant shall be capable of removing undesirable material and excess fines. In order to meet the required gradation, the Contractor may produce acceptable material in one operation or combine coarse and fine piles through a proportioning hopper to create a combined stockpile.

3.3 Stockpile Construction.

3.3.1 All crushed aggregate base course materials will be stockpiled. The engineer shall be notified in advance as to when the manufacturing and stockpiling of crushed aggregate is to be started.

3.3.2 A stockpile equal to at least 20 percent of the bid quantity shall be constructed before the hauling and placing phase of the work begins and that quantity shall be maintained until approximately 80 percent of the bid quantity has been placed.

3.3.3 Stockpiles shall be constructed in layers to minimize segregation. The desired optimum thickness of layers is 4 feet; in no instance shall the thickness be more than 6 feet. Each layer shall be completed before the next layer is started. Construction of stockpiles by the direct use of a fixed conveyor belt system or by dumping over a bank, will not be permitted.

3.4 Placing.

3.4.1 The subgrade or preceding course shall be brought to the specified crown and grade and maintained in a smooth condition free from holes and ruts. If the hauling equipment should cause ruts in the subgrade or previously placed base course, the equipment shall be operated only on the course being placed behind the spreading equipment.

3.4.2 Care shall be taken to avoid segregation during placement. When base course material is dumped in piles, it shall be dumped on the course being placed and spread at once onto the previously placed layer. If spreading equipment is not available, dumping will not be permitted. Any segregation which occurs shall be remedied or the materials removed and replaced at no additional cost to the City.

3.4.3 The Contractor's method of operation shall be such that oversized stones will not be delivered to the project.

3.4.4 When the base course is to be surface-treated and no pavement is to be laid upon it, stones having any dimension greater than 3 inches shall be removed from the upper 4 inches of the top layer.

3.4.5 Prior to fine grading, hard spots in the surface of the top layer shall be eliminated by scarifying the top 4 inches.

3.4.6 To prevent segregation of crushed aggregate during spreading and to assist in obtaining the required density of the mixture, water shall be added to the crushed aggregate prior to performing the grading operations. The course shall be maintained in the moist condition until it is covered.

3.4.7 Crushed aggregate shall be hauled from an approved stockpile. Placing material obtained directly from the conveyor to the roadway without first stockpiling will not be permitted.

3.4.8 The base course material shall be spread in the amount necessary for proper consolidation and shall be shaped true to grade and cross section by means of power graders or other approved equipment.

3.4.9 Surface voids in crushed stone base course (fine gradation) shall be eliminated by the addition of filler material to just fill the voids. Any surplus filler material shall be removed. The finished surface shall be uniform, true to grade, and free from segregation. The Contractor shall furnish and place filler material to correct any visible segregation prior to paving. The filler material shall be spread, scarified if required, into the course and recompacted to the required density. Filler material shall meet the gradation requirements of sand. The final gradation of crushed stone base course (fine gradation) shall meet the requirements of Table 304-1.

3.5 Testing for Gradation.

3.5.1 Sampling procedure shall conform to AASHTO T 2. Testing procedure shall be in accordance with AASHTO T 27. Materials not meeting the gradation requirements shall not be placed on the road.

3.5.2 The amount of material finer than the #200 sieve shall be determined according to AASHTO T 11 which specifies dry sieving after washing. Samples for acceptance testing of the material in place will be taken as the spreading operations progress on each lift just prior to the beginning of the compaction operations on that lift. For a preliminary determination of compliance with the specification for gradation, samples of sand and gravel may be taken from the pit and samples of crushed aggregate may be taken from the stockpile or from the final phase of the crushing operation.

3.5.3 Previously tested and accepted material contaminated by earthen, organic, or other foreign matter, or degraded by hauling equipment, to such an extent that the material no longer meets the gradation requirements, shall be removed and replaced or otherwise made acceptable at the Contractor's expense.

3.6 Compaction.

3.6.1 Unless shown on the plans or ordered otherwise, the compacted depth of sand courses shall not exceed 12 inches. The compacted depth of any layer of gravel, crushed gravel or crushed stone placed shall not exceed 8 inches. The compacted depth of any layer of crushed ledge rock shall not exceed 24 inches.

3.6.2 Compaction of base course material shall be done with approved vibratory rollers and adequate water to meet the requirements of 3.7. A roller producing a dynamic force of at least 27,000 pounds shall be used for layers up to 12 inches. For layers between 12 inches and 24 inches, the roller shall produce a dynamic force of at least 42,000 pounds. Rolling and shaping shall continue until the required density is attained.

3.6.3 Rolling and shaping patterns shall begin on the lower side and progress to the higher side of the course while lapping the roller passes parallel to the centerline. Rolling and shaping shall continue until each layer conforms to the required grade and cross section and the surface is smooth and uniform.

3.6.4 Water shall be uniformly applied over the base course materials during compaction in the amount necessary for proper consolidation.

3.6.5 When vibratory equipment is being operated, the amplitude of vibrations will be adjusted as necessary to avoid causing damage to adjacent buildings and property.

3.7 Density Testing.

3.7.1 The density of sand courses shall be determined by AASHTO T 191 (Sand Cone Method), AASHTO T 204 (Drive Cylinder Method), or AASHTO T 238 (Nuclear Methods). The density shall not be less than 95 percent of the maximum density determined in accordance with AASHTO T 99 (Proctor Density) or a control strip. See 3.8.

3.7.2 The density of gravel and crushed gravel courses shall be determined by AASHTO T 191 (Sand Cone Method), or AASHTO T 238 (Nuclear Methods). The density of crushed stone base courses will be determined by the Nuclear Method. The density shall not be less than 95 percent of the maximum density as determined by AASHTO T 99 (Proctor Density) or a control strip. See 3.8.

3.8 Control Strip Procedure.

3.8.1 At the beginning of the compaction operation a control strip of at least 100 lineal feet in length and span the width of the section being placed shall be constructed. The density requirement shall be determined by compacting the control strip at a suitable moisture content until no further increase in density can be measured. The remainder of the course shall be compacted to a density not less than 95 percent of the maximum control strip density, as measured by the nuclear density testing equipment. A new control strip will be required when there is a significant change in the gradation of the

material being placed, or a change in compaction equipment. Compaction of the control strip shall be done with approved vibratory rollers or compactors capable of producing a dynamic force of at least 27,000 pounds.

3.9 Winter Construction.

3.9.1 Base course materials shall not be placed on or above frozen material if the depth from the top of the contemplated course to the bottom of the frozen material would exceed 2-1/2 feet.

3.9.2 If the density requirements are not attained for any layer before the material freezes, no further material shall be placed on that layer.

Method of Measurement

4.1 Base course materials will be measured by the cubic yard of compacted material placed within the lines shown on the plans or as ordered.

Basis of Payment

5.1 The accepted quantity of base course materials will be paid for at the contract unit price per cubic yard complete in place.

5.2 Filler material used to eliminate voids in crushed stone base course (fine gradation) shall be subsidiary.

Pay items and units:

304.1	Sand	Cubic Yard
304.2	Gravel	Cubic Yard
304.3	Crushed Gravel	Cubic Yard
304.35	Crushed Gravel for Unpaved Drives	Cubic Yard
304.4	Crushed Stone Base Course (Fine Gradation)	Cubic Yard
304.5	Crushed Stone Base Course (Coarse Gradation)	Cubic Yard
304.6	Crushed Ledge Rock	Cubic Yard
304.7	Recycled Bituminous Pavement	Cubic Yard

Table 304-1 Base Course Materials

Required gradation							
Item No.	304.1	304.2	304.3	304.3	304.33	304.4	304.5
Item	Sand	Gravel	Crushed Gravel	Modified Crushed Gravel	Crushed Aggregate For Shoulders	Crushed Stone (Fine)	Crushed Stone (Coarse)
Sieve Size	Percent Passing By Weight						
6 in	100	100	---	---	---	---	---
5 in	---	---	---	---	---	---	---
4 in	---	---	---	---	---	---	---
3-1/2 in	---	---	---	---	---	---	100
3 in	---	---	100	100	---	---	85 - 100
2 in	---	---	95 - 100	95 - 100	---	100	---
1-1/2 in	---	---	---	---	100	85 - 100	60 - 90
1 in	---	---	55 - 85	---	90 - 100	---	---
3/4 in	---	---		---	---	45 - 75	40 - 70
No. 4	70 - 100	25 - 70	27 - 52	27 - 55	30 - 65	20 - 45	15 - 40
No. 200 (In Sand Portion)*	0 - 12	0 - 12	0 - 12	0 - 12	---	---	---
No. 200 (In Total Sample)	---	---	---	---	0 - 10	0 - 5	0 - 5

* Fraction passing the No. 4 sieve

SECTION 306 -- RECLAIMED STABILIZED BASE

Description

1.1 This work shall consist of scarifying if necessary, and pulverizing the existing pavement together with a base course material. It may require removal and rehandling, and the addition of other materials shown on the plans or as ordered.

Materials

2.1 General.

2.1.1 The material shall consist of the existing pavement blended with the underlying gravel or additional crushed gravel. Reclaimed stabilized base shall have a minimum bitumen content of 3 percent and conform to the following gradation:

Sieve Size	Percent Passing By Weight
3 in	100
1-1/2 in	80 - 100
3/4 in	55 - 90
No. 4	40 - 70
No. 200	3 - 10 "Total Sample"

2.1.2 Additional crushed gravel shall meet the requirements of crushed gravel or crushed stone base course (fine gradation).

2.1.3 Additional asphalt shall meet the requirements of 702, as specified.

Construction Requirements

3.1 The existing pavement shall be pulverized together with the underlying base course or additional crushed gravel. The pulverizing operation shall blend the existing pavement and base course into a homogeneous mass, utilizing the bitumen contained in the pavement as a stabilizer. The quantity of material mixed with the existing pavement shall be adjusted as necessary to meet the material specification of 2.1.1.

3.2 The reclaimed stabilized base shall be processed, utilizing scarifying equipment and a travelling hammermill or other approved reclaimers. Equipment such as a milling machine or a rock crushing plant will not be permitted.

3.3 Water shall be applied, as ordered, for the purpose of dust control and to ensure proper compaction. Water may be added during fine grading to improve workability.

3.4 Compaction requirements shall conform to 304.3.6.

3.5 Gradation and bitumen content shall be determined by AASHTO T 164.

3.6 Prior to placing the processed material, the roadbed shall be shaped to the specified crown and grade. If the existing roadbed is disturbed, it shall be compacted in accordance with 304.3.6.

3.7 Excess material, unless specified otherwise, shall become the property of the Contractor.

3.8 Care shall be exercised to save all pavement for reclaiming if trenches are constructed prior to processing.

3.9 If the reclaimed stabilized base is not sufficient to complete the project, additional crushed gravel shall be used to make up the deficiency.

3.10 Reclaimed stabilized base specified to be removed and rehandled may be processed in the roadway or off site. The reclaimed stabilized base shall be returned to the highway and placed on the prepared roadbed to the depths specified.

3.11 Additional asphalt may be required to obtain the minimum 3 percent bitumen content.

3.11.1 The asphalt shall be applied by a liquid distributor or other approved methods, at a rate specified by the Engineer. The asphalt shall be blended with reclaimed stabilized base using approved mixing equipment.

3.11.2 Asphalt shall not be applied when rain is threatening, during rain storms, or when the air temperature is below 50 degrees Fahrenheit (10 degrees Centigrade).

3.11.3 Prior to the addition of asphalt, the moisture content of the reclaimed stabilized base shall be adjusted by aerating or adding water if required.

Method of Measurement

4.1 Reclaimed stabilized base shall be measured by the square yard in place limited to the widths shown on the plans.

4.2 Additional crushed gravel will be measured by the cubic yard, as determined by using 80 percent of the loose volume of the material measured in vehicles in accordance with 109.01.

4.3 Asphalt will be measured by the ton or gallon in accordance with 108.01.

Basis of Payment

5.1 The accepted quantity of reclaimed stabilized base will be paid for at the contract unit price per square yard, complete in place, at the depth specified.

5.2 Additional crushed gravel or crushed stone base course (fine gradation) will be paid for under Item 304.3 or 304.4.

5.3 The accepted quantities of asphalt will be paid for at the contract unit price per ton or gallon, complete in place.

Pay items and units:

306.106	Reclaimed Stabilized Base Processed In Place, 6 in Deep	S.Y.
306.108	Reclaimed Stabilized Base Processed In Place, 8 in Deep	S.Y.
306.110	Reclaimed Stabilized Base Processed In Place,10 in Deep	S.Y.
306.206	Reclaimed Stabilized Base Removed and Rehandled, 6 in Deep	S.Y.
306.208	Reclaimed Stabilized Base Removed and Rehandled, 8 in Deep	S.Y.
306.210	Reclaimed Stabilized Base Removed and Rehandled, 10 in Deep	S.Y.
306.31	Asphalt for Reclaimed Stabilized Base	Pound
306.32	Asphalt for Reclaimed Stabilized Base	Ton

DIVISION 400 - PAVEMENTS

SECTION 401 -- PLANT MIX PAVEMENTS - GENERAL

Description

1.1 These specifications include general requirements that are applicable to all types of bituminous pavements of the plant mix type irrespective of gradation of aggregate, kind and amount of bituminous material, or pavement use. Deviations from these general requirements will be indicated in the specific requirements for each type.

1.2 These specifications provide for the use of reclaimed asphalt pavement material in certain specified mixtures.

1.3 This work shall consist of one or more courses of bituminous mixture constructed on the prepared foundation in accordance with these specifications and the specific requirements of the type under contract, and in reasonably close conformity with the lines, grades, thicknesses, and typical cross sections shown on the plan, within the tolerances specified, or established by the Engineer.

Materials

2.1 Aggregates shall be of uniform quality durable pebbles or fragments of rock, with or without sand or other inert finely divided mineral aggregate. All material shall be free from clay balls, organic matter, deleterious substances, and an excess of flat or elongated pieces as specified in AASHTO M 283 Section S6. Washing will not be required, except when aggregate plants do not produce clean material by the dry process method. In order to obtain uniformity as regards color and appearance of the pavement throughout the project, the aggregate for all the wearing course shall be obtained from the same material source. Sufficient material shall be on hand prior to starting daily operations to insure uninterrupted processing for the working day.

2.1.1 Coarse aggregate shall be crushed stone or crushed gravel and shall have a percentage of wear as determined by AASHTO T96 of not more than 45 percent unless otherwise specified by contract item. In each stockpile, not less than 50 percent by weight of the particles retained on the No. 4 sieve shall have at least one fractured face. Stockpiles consisting of a blend of crushed stone and crushed gravel will be permitted so long as the over-all consistency of the stockpile is reasonably maintained and the lesser portion of coarse aggregate material does not exceed ten percent of the total. This percentage shall be determined on the portion of the total sample that is retained on the No. 4 laboratory sieve, by weight.

2.1.1.1 Stockpiled coarse aggregate shall meet the requirements of Table 401-1.

Table 401-1 -- Percent Passing

Sieve Size	1-1/2 inch	3/4 inch	1/2 inch	3/8 inch
1-1/2 inch	100			
1-1/4 inch	90-100			
1 inch	50-85	100		
3/4 inch	10-50	90-100	100	
1/2		15-55	90-100	100
3/8			20-60	95-100
# 4				20-55
#10	0-5	0-5	0-10	0-10

2.1.2 Fine aggregate shall consist of sound durable particles of sand, crushed stone or a combination thereof. Fine aggregate shall be free from clay balls and injurious amounts of organic matter. Stone screening shall be produced from stone at least equal in quality to that specified for coarse aggregate. Fine aggregate may be 100 percent manufactured aggregate for base course and shall consist of at least 25 percent natural sand for wearing courses. If workability problems occur additional natural sand may be required. Fine aggregate stockpiles containing aggregate larger than 3/8 inches shall not be used.

2.1.3 Mineral filler shall conform to AASHTO M 17 Section 2.

2.1.4 Gradation. Coarse and fine aggregate shall each be of such gradation that when combined with other required aggregate fractions in proper proportion, the resultant mixture will meet the gradation required under the composition of mixture for the specific type under contract. (See Table 401-2). Not more than 10 percent of the fine aggregate blend shall pass the No. 200 sieve. Grading of mineral filler shall conform to the required grading of AASHTO M 17 except that 100 percent shall pass the No. 20 sieve, waiving the requirement for the No. 30 sieve.

2.2 Bituminous materials shall meet the requirements of AASHTO M 226 Table 2, as shown in 702, Table 702-1. The grade to be used shall be as ordered.

2.2.1 Approved sampling valves shall be installed in transport tank trucks to permit taking representative samples of the contents. The recommended location of the sampling valve is in the rear bulkhead of the tank, roughly 1/3 of the height above the bottom. The inlet pipe shall project into the contained liquid as shown in AASHTO T 40.

2.2.2 Asphalt cement furnished from Canada may be accepted based on the penetration grading. The grade shall be that approved by the Engineer.

2.3 Approval of materials. At least three working days in advance of the date of starting operations, representative samples of all materials proposed for use shall be submitted to the Engineer for test and for the preparation of trial mixes relating to the job mix formula. No material shall be used until it has been approved.

2.4 Composition of mixtures. The bituminous plant mix shall be composed of a mixture of aggregate, filler if required, and bituminous material. The several aggregate fractions shall be sized, uniformly graded, and combined in such proportions that the resulting mixture meets the grading requirements of the job mix formula.

2.4.1 Job mix. The general composition limits given in Table 401-2 indicates the master range of mixtures permissible under this specification. No work shall be started on a paving project until the Engineer approves a job mix formula appropriate to the raw materials and blends available to the specific project. The job mix formula shall lie within the master range indicated for the particular type of bituminous concrete. The job mix formula for each mixture shall establish a single percentage of aggregate passing each required sieve size, a single percentage of bituminous material to be added to the aggregate, and a single temperature at which the mixture is to be delivered at the point of discharge. This temperature is subject to change as ordered, depending upon the conditions of the day. Gradings which range from the maximum of one sieve to the minimum of the next will not be permitted. The job mix formula for each mixture shall be in effect until modified in writing by the Engineer. The Engineer may require the use of certain chemical additives.

2.4.1.1 After the job mix formula is established, all mixtures furnished for the project shall conform thereto, within the following ranges of tolerances:

Passing No. 4 and larger sieves	± 7 percent
Passing No. 10 to No. 80 sieves (inclusive)	± 4 percent
Passing No. 200 sieve	± 2 percent
Bitumen	± 0.4 percent
Temperature of mixture	± 20 degrees F

Wearing course mixtures made in the field laboratory with aggregates and asphalt cement combined in the proportions of the job mix formula shall yield a Marshall stability of not less than 750 pounds, a flow value between 8 and 16, and a void content of the compacted mixture between 2 and 6 percent. The Marshall values indicated shall be determined in accordance with AASHTO T 245.

2.4.1.2 Should a change in sources of material be made, a new job mix formula shall be established before the new material is used. When unsatisfactory results or other conditions make it necessary, the Engineer may establish a new job mix formula.

2.4.1.3 The quantity of asphalt cement is given in terms of percent by weight of the total mixture. The amount of asphalt required for a given mixture should be determined by appropriate laboratory testing or on the basis of past experience with similar mixtures, or by a combination of both.

2.5 Asphalt workability additive shall be a clear silicone liquid having a viscosity of approximately 1000 centipoises.

Table 401-2 -- Composition of Mixtures - Master Ranges [1]

	Base Course [2]									Wearing Courses								
	Type A: 1-1/4 in [4]			Type B: 3/4 in [4]			Type C: 1/2 in [4]			Type D: 3/4 in Single Course [4]			Type E: 1/2 in [4]			Type F: 3/8 in [4]		
	Percentage by Weight Passing - combined Aggregate																	
	Min	Desired	Max	Min	Desired	Max	Min	Desired	Max	Min	Desired	Max	Min	Desired	Max	Min	Desired	Max
1-1/4 in	95	100	100															
1 in	75	85	95															
3/4 in	62	72	84	95	100	100				95	100	100						
1/2 in	50	60	70	70	81	92	95	100	100	82	91	100	95	100	100			
3/8 in	42	50	60	60	71	80	65	75	85	68	79	90	85	90	95	95	100	100
No. 4	28	36	45	42	50	57	38	44	50	50	65	79	60	66	75	64	71	80
No. 10	18	23	27	289	32	38	28	32	36	36	51	67	38	46	50	44	50	55
No. 20	10	15	18	16	20	24	16	20	24				24	27	32	25	30	35
No. 40	5	10	13	9	13	17	9	13	17	17	30	44	14	19	23	15	20	25
No. 80	1	6	9	3	7	11	3	7	11	9	19	29	6	11	14	6	11	16
No. 200	0	2	4	0	3	4	0	3	4	3	5	8	2	3	6	2	4	6
Asphalt Cement: % of Mix[3]	3.8	4.3	4.8	4.8	5.3	6.0	5.0	5.4	5.8	5.5	6.0	6.5	6.0	6.4	7.0	6.3	6.5	7.0

(1) Gradings approaching the maximum amount permitted to pass the various sieves will result in pavement surfaces having comparatively fine texture, while gradings approaching the minimum amounts passing various sieves will result in surfaces with comparatively coarse textures.

(2) Alternate aggregate sizes are included to ensure that the coarse aggregate shall not be larger than one-half the thickness of the layer being placed.

(3) The asphalt content for the above mixture is based on the use of aggregate with a specific gravity of 2.65 to 2.70. The asphalt content will be adjusted when aggregate with a higher specific gravity is used.

(4) Reclaimed asphalt pavement (RAP) is permitted to be used in these courses.

2.6 Reclaimed Asphalt Pavement (RAP). Rap shall consist of asphalt pavement and shall be processed by crushing, cold milling or other approved sizing techniques approved by the Engineer to meet the required gradation specifications. The mixture of RAP, new aggregate and added asphalt cement shall meet the requirements specified in Table 401-2, Composition of Mixtures for aggregate gradation and asphalt cement content. The added asphalt cement may be AC 5, AC 10 or other asphalt cement grades as approved by the Engineer. The aggregate component of the RAP, shall meet the requirements of Section 401.2.1. The bitumen component of the RAP shall be asphalt cement and shall be free of significant contents of solvents, tars and other volatile organic compounds or contents of solvents, tars and other volatile organic compounds or foreign substances that will make the RAP unacceptable for recycling as determined by the Engineer. The blend percentage or RAP for a drum mixer shall not exceed 50 percent and for a batch plant shall not exceed 35 percent. RAP incorporated in wearing courses for both a drum mixer and a batch plant shall not exceed 15 percent. The Engineer will use one of the following procedures to approve the RAP quality.

(a) RAP obtained from a pavement, which was constructed with asphalt cement, and aggregates that meet the current requirements of Section 401.2.1, will be approved by the Engineer.

(b) If the source of the RAP or its quality is not known, the Contractor shall submit for approval to the Engineer at least 30 calendar days prior to the start of paving the following:

1. The designated use of the RAP and approximate proportions.
2. Representative samples and gradation and asphalt cement content test results of the RAP to be incorporated into the Recycled Mixture. Two samples shall be taken form each 1,000 tons or less of the stockpiled material.
3. Penetration, Kinematic Viscosity, and Visosity by Vacuum Capillary Viscometer test results of the recovered asphalt binder material. A minimum of one test for each 1,000 tons or less of the stockpiled material, certified by an independent laboratory.

2.7 Asphalt modifiers. Admixtures and additives may be approved by the Engineer.

Construction Requirements

3.1 Mixing Plants.

3.1.1 The site shall have ample storage space for the required separate bins, stalls, or stockpiles, to allow delivery of uncontaminated sized aggregates to the feeder. To prevent spillage from one pile or bin to the next, aggregate assigned to different stockpiles shall be separated by bulkheads or other satisfactory means, and buckets on equipment used to fill bins or stalls shall not be wider than the clear opening of the bin.

3.1.1.1 Course aggregates shall be furnished in at least two nominal sizes for mix types containing top size aggregates of one-half inch and above.

3.1.1.2 Stockpiles of coarse aggregate produced for use in drum mix plants having top size aggregates greater than three-fourths inch, shall be constructed in layers not to exceed four feet.

3.1.1.3 RAP shall be stockpiled on a free draining base separately from other aggregates. RAP from each pavement source shall be stockpiled with RAP materials having similar characteristics. RAP taken from Type A pavement courses shall be stockpiled separately. RAP shall be reclaimed from stockpiles without contamination by foreign materials.

3.1.1.4 RAP shall be fed into the plant by equipment specifically designed for recycling and shall be approved by the Engineer. In addition, all requirements pertaining to aggregates shall apply to RAP. Scalping screens, grizzlies or similar devices shall be installed on the RAP feed bin(s) to remove any debris or other foreign materials in excess of 4 inches. If a drum mix type plant is used, the RAP shall be fed into the drum so that it will not come in direct contact with the burner flame. Mixing of RAP with the new aggregate shall occur before the bituminous material introduction point. The final mix produced shall be visually free from any chunks of RAP

3.1.1.5 All blending of aggregates shall be accomplished through separate bins at the cold elevator feeders and not in stockpiles.

3.1.1.6 The plant shall be provided with a dust collector or collectors, designed to waste or return uniformly to the hot elevator, all or part of the material collected, as directed. All plants shall have adequate covers and housing as may be necessary to insure the proper collection of dust and the general cleanliness of the plant operation. The Contractor shall comply with all State and Federal environmental regulations.

3.1.1.7 Plants shall be approved prior to operations and shall be operated so as to assure an adequate supply of mixture to the project.

3.1.2 Storage of Bitumen.

3.1.2.1 Tanks for storage of bitumen shall be of minimum 10,000 gallon capacity and equipped for heating the material under effective and positive control at all times, to the temperature requirements set forth in the specifications for the paving mixture. Heating shall be accomplished by steam or oil coils, electricity, or other means such that no flame shall come in contact with the heating tank.

3.1.2.2 A complete system providing for continuous circulation of the bitumen between the storage tank and the proportioning units shall be employed. The discharge end of the circulating pipe shall be maintained below the surface of the bitumen in the storage tank to prevent discharging the hot bitumen into the open air.

3.1.2.3 The Contractor shall provide in the bitumen feed lines connecting the plant storage tanks to the bitumen weighting system or spray bar a sampling outlet consisting

of a valve installed in such a manner that samples may be withdrawn from the line slowly at any time during plant operation. The sampling outlet shall be installed between the pump and the return discharge line in such a location that it is readily accessible and free from obstruction. A drainage receptacle shall be provided for flushing the outlet prior to sampling.

3.1.3 Control of Bitumen.

3.1.3.1 Satisfactory means either by weighing or metering, shall be provided to obtain the proper amount of bituminous material in the mix within the tolerance specified. Means shall be provided for checking the quantity or rate of flow of bituminous material into the mixer as follows:

(a) Metering devices for bitumen shall indicate accurately to within 1.0 percent the amount of bitumen delivered. The section of the bitumen flow line between the charging valve and the spray bar shall be provided with a three-way valve and outlet whereby the quantity delivered by the meter may be checked by actual weight. The valve controlling the flow of bitumen to the mixer shall close tightly to prevent bitumen from leaking into the pug mill during the mixing cycle. The meter shall be constructed so that it may be locked at any dial setting to 0.1 gallon and will automatically reset to this reading after the addition of bitumen to each batch. The dial shall be in full view of the mixer operator. The size and spacing of the spray bar openings shall provide a uniform application of bitumen the full length of the mixer in a thin uniform sheet or in multiple sprays.

(b) If a bucket is used for weighing the bitumen, the bucket shall be of sufficient capacity to hold and weigh the amount required for a batch in a single weighing. The filling system and bucket shall be of such design, size, and shape that bitumen will not overflow, splash, or spill outside the confines of the bucket during filling and weighing, and it shall be so arranged as to deliver the bitumen in a thin uniform sheet or in multiple sprays over the full length of the mixer. The time required to add the bitumen shall be not more than 15 seconds.

(c) Bitumen scales shall conform to the requirements for aggregate scales as specified in 3.1.4.7. Beam type scales shall be equipped with a tare beam or adequate counter-balance for balancing the bucket and compensating periodically for the accumulation of bitumen on the bucket

3.1.3.2 Suitable means shall be provided, either by steam or oil jacketing or insulation, for maintaining the specified temperatures of the bitumen in the pipelines, meters, weigh buckets, spray bars, and other containers or flow line.

3.1.4 Batching Plants.

3.1.4.1 Feeders shall provide an accurate and positive means for uniform and continuous feeding of the mineral aggregate into the dryer. The feeder or feeders shall be capable of delivering the maximum number of aggregate sizes required in their proper proportion. They shall provide for adjustment of the cold feed and shall be capable of

being secured in any position. Feeders that surge or otherwise run intermittently will not be allowed.

3.1.4.2 Dryers shall continuously agitate the aggregate during the heating and drying process without leaving any visible unburned oily residue on the aggregate when it is discharged from the dryer. If unusually wet aggregate is being used, the input to the dryer shall be reduce to that amount which the dryer is capable of drying. Aggregates shall be free from coatings of dust after drying.

3.1.4.3 Plant screens shall be constructed and operated in such a manner that all aggregates will be uniformly separated into the sizes required for proportioning. They shall have sufficient capacity to furnish the necessary quantity of each aggregate size required for continuous operation. Screen cloth which has become broken or has worn sufficiently to affect the gradation shall be replaced.

3.1.4.4 Thermometric equipment shall be provided as follows:

(a) An armored thermometer of suitable range shall be fixed in the bitumen feed line at a suitable location near the discharge at the mixer unit.
(b) The plant shall be further equipped with an approved thermometer, pyrometer, or other approved thermometric instrument which shall continuously indicate the temperature of the heated aggregate at the discharge chute of the dryer.

3.1.4.5 Hot Bins shall consist of at least 4 separate aggregate compartments. One compartment shall be reserved for aggregate no larger than that passing a 5/32 inch square opening screen, and when required, one additional compartment shall be added for dry storage of mineral filler. Provision shall be made for accurate proportioning. When a compartment contains more than 15 percent undersized material, the compartment shall be drawn, and the cause of the contamination shall be corrected. Each compartment shall contain the following features:

(a) Sufficient volume to supply the mixer at full rated capacity.
(b) An overflow pipe that shall be of such size and at such a location as to prevent any backing up of material into other bins or into contact with the screen. Overflow apparatus shall be equipped with a telltale device that alerts the operator and the inspector when the overflow equipment is full.
(c) Adequate telltale devices to indicate the position of the aggregate in the bins at the lower quarter points.
(d) Gates which cut off quickly and completely, with no leakage.
(e) Adequate and convenient facilities including safe platforms for obtaining representative samples for each bin.

3.1.4.6 Weigh boxes shall be of sufficient size to hold the maximum required weight of aggregate for one batch without hand raking or running over. The weight box shall be supported on fulcrums and knife edges so constructed that they will remain in alignment or adjustment. All parts of the weigh box shall be free from contact with any supporting

rods, columns, or other equipment which will affect the proper functioning of the hopper or scale. Gates on both bins and weight hopper shall be constructed to prevent leakage when closed.

3.1.4.7 Aggregate scales for any weigh box or hopper shall be of standard make and design, accurate to 0.5 percent of the indicated load. The weight shall be indicated on a springless dial or digital display. Scales shall be substantially constructed and shall be installed in such a manner as to be free from vibration. The dial shall be of the compounding type and have a full set of pointers to indicate the job mix formula. All dials shall be located so as to be plainly visible to the operator at all times and shall be of such a size that the numerals can be read at a distance of 25 feet. When a digital display system is used, the display shall be in full view of the operator and the numerals shall be of such a size that they can be easily read by the inspector. If the digital display is so located that it is not easily accessible to the inspector, a duplicate display will be required for exclusive viewing by the inspector. The job mix formula target weights shall be part of the digital display continuously during plant operations. The digital scale weight indications shall be displayed adjacent (in juxtaposition) to each target weight for easy comparison to the job mix formula. It shall be the responsibility of the Contractor to arrange that all scales are tested and sealed according to provisions as shown in the National Bureau of Standards Handbook 44, at least on an annual basis. The work shall be accomplished by a competent commercial scale company prior to the start of the construction season. Scales shall be re-tested prior to use, after they have been moved. The Contractor shall have readily available at least ten standard 50 pound weights, for checking the scales during operations.

3.1.4.8 The batch mixer shall be of an approved pug mill type, hot oil or steam jacketed, or heated by other approved means and capable of producing uniform mixtures within the specified tolerances. The mixer shall have a batch capacity of not less than 2,000 pounds and be constructed so as to prevent leakage during the mixing cycle. The amount of material which may be mixed per batch shall not exceed the manufacturer's rated capacity. If the mixer will not mix properly at the rated capacity, or if its production does not coordinate with the other plant units, the Department reserves the right to reduce the size of the batch until the desired efficiency is obtained. The pug mill shall be equipped with a sufficient number of paddles operated at such speed as to produce a properly and uniformly mixed batch. if, in the course of mixing, two adjacent paddle tips become broken, immediate repair will be called for. If the paddle tips become broken at widely separated points, repair may be delayed until the end of the working day. The clearance of the tips from all fixed and moving parts shall not exceed 3/4 of an inch. Badly worn or defective tips shall not be used in mixing operations. The mixer shall be covered to prevent loss of fine material. The discharge gate shall be so designed that no uncoated material will be retained at the gate opening during the mixing operation. Leakage from the pug mill gate during operation will not be permitted.

3.1.4.9 Each plant shall be equipped with an accurate time lock to control the operations of a complete mixing cycle. A mixing cycle shall consist of two periods, the dry mixing period and the wet mixing period. The dry mixing period shall be the interval

of time between the opening of the aggregate weigh hopper gate and the start of the application of bitumen. The wet mixing period shall be the interval of time between the start of the application of bitumen and the opening of the mixer gate. The time lock shall be capable of being set at the intervals of five seconds or less throughout the mixing cycle and shall have a suitable case equipped with an approved lock. The setting of time intervals shall be performed in the presence and under the direction of the Engineer who may lock the case until such time as a change is to be made in timing periods. The time lock shall lock the bitumen bucket throughout the dry mixing period and shall lock the mixer gate throughout the dry and wet mixing period. Lights meeting the approval of the Engineer and visible from the ground, shall indicate when each portion of the mixing cycle is occurring.

3.1.4.10 The use of a fully automatic batching plant may be approved, provided the systems for automatic batching and proportioning of the various components of the bituminous mixtures meet the following requirements:

(a) The automatic proportioning controls shall include equipment for accurately proportioning batches of the various components of the mixture by weight in the specified sequence and for controlling and timing the mixing operation. Interlocks shall be provided which will delay, stop, or lock out the automatic batch cycling whenever the batched quantity of any component weight or the total batch is not within the specified weight tolerance, or when there is a malfunction in any portion of the control system. The automatic batching or proportioning controls shall be equipped with lights meeting the approval of the Engineer and visible from the ground and shall indicate when each portion of the mixing cycle is occurring.

(b) The automatic control for each batching scale system shall be equipped with a device for stopping the automatic cycle in the underweight check position and in the overweight check position for each material so that the tolerance setting may be checked.

(c) Each dial scale system shall be equipped with a removable dial puller which can be attached to the dial lever system so that the dial can be moved smoothly and slowly through its range to check the settings of the automatic control system. The plant operator shall perform this automatic control system checkout procedure periodically as requested by the Engineer.

(d) The weight batching controls shall meet the following tolerances for the various components weighed in each batch:

Component Weighed	Percentage of Total Batch Weight
Tare weight of aggregate weigh box	± 0.5
Tare weight of bitumen weigh box	± 0.1
Each aggregate component	± 1.5
Mineral filler	± 0.5
Asphalt	± 0.1

(e) The total weight of the batch shall not vary by more than +/- 2.0 percent of the designated batch weight.

(f) Recordation equipment shall be provided in all plants employing automatic proportioning. Each recorder shall include an automatic printer system. The printer shall produce, in digital form, a weight slip conforming to the requirement of 109.01 and 401.3.4.4.

(g) If at anytime the automatic proportioning or recording system becomes inoperative, the plant will be allowed to batch materials manually, but will be required to use the timing and time lock devices, for a period not to exceed two working days. Approval will be dependent upon the Contractor's furnishing an alternate satisfactory method of determining the total weight of material delivered to the project. Time extensions greater than two working days will require written permission.

3.1.4.11 The aggregate shall be dried and heated to a minimum temperature of 260 degrees F. The bitumen shall be heated to a temperature between 250 degrees F and 325 degrees F. Each size of hot aggregate, the mineral filler if required, and the bituminous cement shall be measured separately and accurately to the proportions in which they are to be mixed. The mixture shall be made by charging the mixer with the hot aggregate, coarse sizes first, unless otherwise directed, which shall be dry mixed for 5 to 15 seconds. The bitumen shall be added and the mixing shall continue until a uniform coating is obtained and all particles of the aggregate thoroughly coated. The total dry and wet cycle shall be not less than 35 seconds for base and binder mixtures and not less than 45 seconds for the wearing course. In no case shall the total mixing period exceed 75 seconds.

3.1.4.12 If the aggregate in the hot bins contains sufficient moisture to cause foaming in the mixture, such aggregate shall be removed from the bins and production rate shall be reduced so as not to exceed the capacity of the dryer. Material having once gone through the mixing plant shall not be returned to the stockpiles.

3.1.5 Drum Mix Plants.

3.1.5.1 The plant shall be specifically designed for the process and shall be capable of satisfactorily heating, drying, and uniformly mixing the bituminous material and aggregate in accordance with the job mix formula. The rate of flow through the drum shall be controlled in order that a homogeneous mixture is obtained with all particles uniformly coated. In no case shall the quantity of mix produced exceed the manufacturer's rated capacity. If the percent of moisture in the mixture exceeds 1.0 percent by weight, the right is reserved to decrease the rate of production. The plant shall be equipped with automatic burner controls.

3.1.5.2 The cold bins shall be divided in at least four compartments and shall be designed to prevent the overflow of material from one bin to another. When reclaimed pavement is used, an additional bin designed for this purpose will be required. Each cold bin shall be equipped with an orifice to feed the aggregate accurately and uniformly. The feeding orifice shall be adjustable and indicators shall be provided to show the gate opening. An automatic plant shutoff device shall be provided to operate when any aggregate bin becomes empty or the flow from any bin gate becomes restricted. A

vibrator or other suitable means may be required in order to insure a uniform flow of materials. The order of aggregate feed onto the composite cold feed belt shall be from coarse to fine. A scalping screen mounted independently of other proportioning or weighing equipment will be required.

3.1.5.3 The total cold aggregate feed shall be weighed continuously by an approved belt scale. The weighing system shall register within +/- 0.5 percent of the indicated load.

3.1.5.4 An automatic aggregate sampling device shall be provided which will divert representative samples of the full flow of aggregate from the total cold feed. The sampling device shall cut the full width and depth of the aggregate flow. The sampling point shall be after the aggregate has passed through the scalping screen and prior to entry into the drum.

3.1.5.5 Proportioning controls for aggregate and bitumen shall be located at the panel which also controls the mixture and the temperature. The panel shall be equipped with automatic controls that shall display, in digital form, the percentages of bitumen, mineral filler if required, and each aggregate in the job mix formula. The panel shall also be equipped to raise and lower the production rate without having to reset the individual controls for each change in production rate. The controls shall maintain an aggregate flow accuracy such that the total variation of all materials being drawn per interval of time shall not exceed an amount equal to 1.5 percent of the total weight of bituminous mixture per interval of time.

3.1.5.6 Provisions shall be made for introducing the moisture content of the total cold feed into the belt weighing system and correcting the wet aggregate weight to dry aggregate weight. The system shall be capable of adjusting the flow of bituminous material to compensate for any variation in the dry weight of the aggregate flow.

3.1.5.7 The dry weight of aggregate flow shall be displayed by automatic digital readout in intervals of weight and time.

3.1.5.8 When mineral filler is specified, a separate bin and feeder shall be provided with variable drive interlocked with the aggregate feeders. Mineral filler shall be introduce and uniformly dispersed into the mixture without loss to the dust collection system. A device shall be provided to indicate when the flow of filler into the delivery system stops or its specified volume is out of job mix tolerance. The rate of flow shall be accurate to within 0.5 percent by weight, of the total mix. Means shall be provided to readily divert the flow of mineral filler into a container for measurement.

3.1.5.9 The bitumen shall be introduce through a continuously registering cumulative indicating meter by a pump specifically designed for the plant. The meter shall be located in the asphalt line so that it will continuously register the asphalt discharge to the mixer and so that the discharge through the meter can be readily diverted into a suitable container for measurement by actual weight. The meter shall indicate accurately to within

1.0 percent the amount of bitumen being delivered. The accuracy of the pump and meter shall be verified at periodic intervals as designated by the Engineer.

3.1.5.10 Satisfactory means shall be provided to assure positive interlock between dry weight of aggregate flow and the flow of bituminous material through an approved meter.

3.1.5.11 The flow of bituminous material shall be displayed by automatic digital readouts in terms of volume or intervals of weight and time.

3.1.5.12 The plant shall have means of diverting mixes at start up and shut down or where mixing is not complete or uniform.

3.1.5.13 A surge or storage system complying with 3.3 shall be provided.

3.2 Mixing Temperature.

3.2.1 The Engineer may adjust the job-mix formula temperature within the limits of 260 degrees F and 350 degrees F according to the existing conditions. During hot weather, the temperature of the mixture when discharged, shall be as low as is consistent with proper mixing and placing. During cold weather, a temperature approaching the upper limit is desirable. Material with a temperature at discharge outside the job-mix formula tolerance may be rejected. In no case, will a mixture be accepted with a discharge temperature in excess of 375 degrees F.

3.3 Hot Storage System.

3.3.1 The hot storage system shall be capable of conveying the hot mix from the plant to insulated storage bins and storing the hot mix without appreciable loss in temperature, asphalt migration, segregation or oxidation.

3.3.2 The conveyor system may be a continuous type or skip bucket type. If the continuous type is used, it shall be enclosed to prevent a drop in mix temperature. If the skip bucket type is used, the bucket must be of sufficient capacity to transport an entire batch and mass dump in
to the bins.

3.3.3 The storage bins shall be designed in such a manner as to prevent segregation of the hot mix during discharge from the conveyor into the bins and shall be equipped with discharge gates that will not cause segregation of the hot mix while loading the mix onto the trucks. The storage bin heating system shall be capable of maintaining the mix temperature without localized heating (hot spots).

3.3.4 The bin shall be equipped with a light or indicator to show when the level of material reaches the top of the discharge cone. The bin shall not be emptied below the

top of the discharge cone until the use of the bin is completed each day. The material remaining in the discharge cone may be rejected if there is evidence of segregation.

3.3.5 Unless otherwise permitted, material placed in a surge bin or storage silo, must be used during the same working day. When such permission is given in an emergency, material remaining overnight, must be used within 24 hours of the time of mixing.

3.3.5.1 Extended storage silos designed for long term storage may receive prior approval for routine overnight storage provided that the mix is to be used on the following day. For this work, the Contractor must provide certified test results for each silo that the following acceptance criteria for mix quality are met. These test results and certifications must be obtained from an approved testing company and submitted to the Engineer. When an emergency arises such as an extended rainy period or equipment failure, the Engineer may grant additional storage time up to 72 hours provided that the bin has been certified for the extended period. When the extended period has been granted, the bin shall be sealed off from the entrance of air and shall not be opened for any reason until the project is ready for the entire contents of the bin. Violation of this provision will void the certificate and the contents of the bin will be rejected. The mixtures, after storage, shall meet the following criteria:

Test Property	Allowable Variation
1. Temperature	±20 degrees F from plant discharge temperature.
2. Asphalt Cement Recovered from Wearing Course Mixture	
a. Penetration at 77 degrees F	Loss not to exceed 50 percent of the penetration of the asphalt sampled from the plant prior to mixing at 290 degrees F.
b. Viscosity at 140 degrees F	Viscosity not to exceed four times the viscosity of the original asphalt sampled from the plant prior to mixing at 290 degrees F.

3.3.6 The storage time will be defined as the interval of time beginning with the introduction of the mixture into the bin to the time of the completion of discharge from the bin.

3.3.7 Approval for the use of storage bins may be withdrawn in the event there is an excessive amount of heat loss, segregation or oxidation of the hot mix due to the use of storage bins.

3.4 Weighing and Hauling.

3.4.1 Truck scales shall be provided for non-automated plants and storage without scales. These scales shall be tested and sealed according to provisions as shown in the

National Bureau of Standards Handbook 44 annually by a competent commercial scale company. Each truck shall be tared daily prior to the day's operations by a certified weigh master and shall be properly logged. The sealing of scales and provisions for random weighing of truck loads for all automated and non-automated plants shall be the responsibility of the Contractor. Portable scales shall be checked after moving and before being used.

3.4.2 The weight of each truckload of paving mixture as indicated by the truck scales, shall be within plus or minus 3 percent of the total weight of all batches in the load. Failure to maintain this standard of uniformity shall be sufficient cause for stopping plant operations until the cause of such disparity in weight is corrected.

3.4.2.1 The Contractor may provide an approved printer system which will print the weights of the material delivered. Such weights shall be evidenced by a weight slip for each load.

3.4.3 The Contractor may provide an approved automatic printer system which will print the weights of the material delivered, provided the system is used in conjunction with an approved automatic batching and mixing control system. Such weights shall be evidenced by a weight ticket for each load.

3.4.4 Weight slips shall include requirements as shown in 108.01 and the following. For batch plants with automatic proportioning equipment:

(a) Tare weight of aggregate weigh box.
(b) Tare weight of bitumen weigh box.
(c) Accumulative weights as batched for each aggregate (total of last aggregate will be aggregate total).
(d) Weight of bitumen.
(e) Accumulated total weight of batch.

3.4.5 Each weight slip will show a consecutive slip number and shall include accumulative total of material delivered for each day.

3.4.6 The mixture shall be transported from the paving plant to the project in trucks having tight, smooth metal beds previously cleaned of all foreign materials. Truck beds may be lined with a polyethylene type material designed and installed for hauling hot bituminous mixes. Each load shall be covered with canvas or other suitable material of sufficient size and thickness to retain heat and to protect it from weather conditions. The cover when new shall weigh a minimum of 18 oz/yd^2 and it shall be a tightly woven or solid material. The inside surfaces of vehicles may be lightly lubricated with a thin oil film or soap solution, but an excess of lubricant will not be permitted. When necessary, so that the mixture will be delivered on the project at the specified temperature, truck beds shall be insulated and covers shall be securely fastened. Equipment which leaks oil, diesel fuel, gasoline or any other substance detrimental to the pavement, will not be allowed on the project.

3.5 Placing.

3.5.1 Prior to placing of any mix, a Pre-paving conference shall be held to discuss and approve the paving schedule, source of mix, type and amount of equipment to be used, sequence of paving pattern, rate of mix supply, traffic control and general continuity of the operation. Special attention shall be made to the paving pattern sequence to minimize cold joints. The field supervisors of the above mentioned operations shall attend this meeting. All equipment used shall be approved on the project site prior to starting up each day.

3.5.1.1 The Contractor shall notify the Engineer at least three working days in advance of paving operations to allow sufficient time to schedule required site inspection and testing. All paving and compaction equipment shall be approved and on site prior to start up each day.

3.5.1.2 Crack sealing material to be covered by a 1" or less overlay shall cure a minimum of 45 days prior to the placement of bituminous pavement.

3.5.2 Weather Limitations. Mixtures shall be placed only when the underlying surface is dry, frost-free and the surface temperature is above 40 degrees F for courses greater than 1-1/4 inches in compacted depth and above 50 degrees F for courses less than 1-1/4 inches in compacted depth. The Engineer may permit, in case of sudden rain, the placing of mixture then in transit from the plant, if laid on a base, free from pools of water, provided motorist visibility is not impaired and all other specifications are met. No load shall be sent out so late in the day that spreading and compaction cannot be completed during daylight, unless night work is specified. If rapid surface cooling of the laid down mix is occurring due to wind, the Engineer may suspend operations for the day. Wearing courses shall not be scheduled for placement after October 1st of any year without written approval by the Engineer. If it is determined to be in the best interest of the City to schedule placement after October 1st, the above specified weather and surface conditions shall remain in effect.

3.5.2.1 In special instances, when the Engineer determines that it is in the best interest of the City, he may waive the requirements of 3.5.2.

3.5.2.2 Any material delivered to the spreader having a temperature lower than 250 degrees F, shall not be used.

3.5.3 At the beginning and end of the project or project section, the existing pavement shall be removed to a sufficient depth to allow the placing of the new pavement and construction of a transverse joint. The underlying course, shall be clean and free from foreign materials and loose bituminous patches and must present a dry, unyielding surface.

3.5.4 Sweeping. Existing pavement or previously laid courses shall be thoroughly dry and free from all dust, dirt and loose material. Sweeping with a power broom, supplemented by hand brooming, may be necessary.

3.5.5 Tack coat. Surfaces of any pavement course which have been exposed for a considerable length of time, when ordered, shall be covered by a tack coat of emulsified asphalt.

3.5.6 Drainage and utility structures within the limits of the pavement shall be set and raised in accordance with the provision of 604.3.4. Contact surfaces of the drainage and utility castings as ordered shall be painted with a thin coating of suitable bituminous material.

3.5.7 All courses shall be spread and finished to the required thickness by approved type, self-contained, self- propelled spreading and finishing machines (pavers). Pavers shall be provided with the adjustable, activated screed or strike-off assembly and shall be capable of spreading the mixtures with a finish that is smooth, true to the required cross-section, uniform in density and texture and free from hollows, tears, gouges, corrugations and other irregularities. Broadcasting behind the paver shall be held to a minimum. Pavers shall be capable of spreading and finishing courses of the required thicknesses and lane widths. Horizontally oscillating strike-off assemblies will not be approved. The Engineer may require the use of certain chemical additives to enhance workability.

3.5.7.1 The activated screed or strike-off assembly shall operate by cutting, crowding, vibrating or other practicable action without tearing, shoving or gouging the mixture. The activated portion of the screed shall extend the full width of the mixture being placed in the traveled way. Outside of the traveled way such as on shoulders, tapers, areas adjacent to curbs and at other locations as permitted, non-activated extensions to the screed will be allowed. The paver shall be equipped with a screed heater which shall be used when starting a cold machine and for maintaining a suitable screed temperature when needed.

3.5.7.2 The paver hopper gates shall be adjusted to pass the correct amount of mix to the spreading screws so that the screws will operate more or less continuously. The height of material shall be maintained at a constant level in front of the screed, to a point where approximately half of the auger shall be visible at all times.

3.5.7.3 Pavers shall be equipped with automatic screed controls with sensors for either or both sides of the paver:

1. 2-30' Ski type devices (Floating beams)
2. 2-Grade sensors
3. 2-Short skis (joint matchers)
4. Slope sensing control for transverse slope.

The sensors for either or both sides of the paver shall be capable of sensing grade from an outside reference line or from the surface using a ski type device and shall be capable of sensing transverse slope of the screed and providing automatic signals which operate the

screed to maintain the desired grad and transverse slope. Pavers shall not be used until the automatic controls have been checked and approved by the Engineer.

3.5.7.4 The use of automatic grade and slope controls shall be required on all pavers.

3.5.7.5 Whenever a breakdown or malfunction of the automatic controls occurs, the equipment may be operated manually or by other methods for the remainder of the normal working day on which the breakdown or malfunction occurred, provided this method of operation will produce results otherwise meeting specifications.

3.5.7.6 On projects or parts of projects where the Engineer deems that the use of automatic controls are impracticable, he may permit manual operation.

3.5.8 The forward speed of the paver shall be adjusted to the rate of the supply of materials so that the paver will be operated without having to make any but emergency stops. If the Engineer determines that the paving operations result in excessive stopping of the paver, he may suspend all paving operations until the Contractor makes arrangements to synchronize the rate of paving with the rate of delivery of materials.

3.5.9 When patching existing pavement, the material shall be placed on the prepared clean underlying surface at the locations designated and spread to produce a smooth and uniform patch. The patch material shall be thoroughly compacted and shall match the line and grade of the adjacent pavement.

3.5.10 Relatively small areas not accessible to the paver may be spread by hand, but extreme care shall be taken to create a surface texture similar to the machine work. Surface material shall be spread by lutes and not by rakes.

3.5.11 Unless otherwise authorized, the final wearing course shall not be placed until after guard rail posts have been set and general clean-up has been completed.

3.5.12 When hot bituminous bridge pavement is to be placed over barrier membrane, the placing temperature shall be as specified in 538.3.5. Unless otherwise permitted, the 1” base course shall be placed within five days after the membrane has been completed. A paver, mounted on rubber tracks or tires, shall be used to place the 1" base course unless this procedure is found to cause damage to the membrane. When such damage is found to be evident, the hand method may be allowed. The hand method may also be allowed if the Engineer determines that the use of a paver for this work is impractical. During warm weather, the above paving shall be done during the cool period of the day. A paver shall be used to place the wearing course.

3.5.13 Where pavement is placed adjacent to structural members such as expansion joints, the material in the top course shall be placed so that the compacted grade of the pavement is ¼ to ½ inches above the grade of the structural member.

3.6 Compaction.

3.6.1 Immediately after the bituminous mixture has been spread, struck off and the surface irregularities adjusted and it is in the proper condition, it shall be thoroughly and uniformly compacted by rolling. The initial rolling shall be done with a steel wheeled roller of either the static or vibratory type. If the initial rolling is done with a static roller, this operation shall be followed by the use of pneumatic tired roller and a 3-axle type steel wheel roller with center roll locked. If the initial rolling is done with a vibratory roller, the final rolling for this operation, shall be done with a static roller or a vibratory roller in the static mode. Rollers must be in good mechanical condition, free from excessive backlash, faulty steering mechanism or worn parts. The make and model number shall be properly marked on each roller.

3.6.2 Vibratory Rollers.

3.6.2.1 The Contractor may use dual vibratory steel drum rollers for all courses of hot bituminous pavement in excess of one inch of uncompacted depth. When dual vibratory steel drum rollers are used on uncompacted depths of one inch or less, or on previously compacted pavement, the roller shall be operated in the static mode. Only dual vibratory steel drum rollers appearing on the State of New Hampshire's approved Hot Bituminous Pavement Vibratory Compaction Equipment List, shall be permitted.

3.6.2.2 One dual vibratory steel drum roller shall be required for each paver for initial rolling. Asphalt pavers placing hot bituminous pavement, greater than sixteen feet in width, will require a second dual vibratory steel drum roller. An additional approved static steel wheel roller or rollers having a minimum weight of 8 tons, shall be required for finish or back rolling. If dual vibratory steel drum rollers are used for finish rolling, they shall be operated in a static mode.

3.6.2.3 Vibratory dual steel drum rollers shall be operated at uniform speeds not to exceed 2-1/2 MPH, 220 feet per minute. The minimum frequency for all dual vibratory steel drum rollers shall be 2200 V.P.M. If it can be demonstrated that a roller can accomplish a minimum of 10 impacts per liner foot at faster speeds, the Engineer may waive the maximum speed requirement. Roller overlaps shall be not more than 6 inches onto the previously compacted material.

3.6.3 Static Rollers.

3.6.3.1 All hot bituminous pavement courses may be initially rolled with an approved static steel wheeled roller, having a minimum weight of 8 tons. The roller shall overlap the previous roller pass by one half the width of the roll. If a static wheel roller is used for the initial rolling, a pneumatic tired roller shall be used for intermediate rolling and a three axle tandem roller shall be used for finish rolling.

3.6.3.2 Following the initial rolling, the courses shall be rolled with an approved pneumatic tired roller. This roller shall be self propelled and shall be equipped with smooth tires of equal size and diameter. The wheels shall be so spaced that one pass of a

2 axle roller, will accomplish one complete coverage. No overlap is required for pneumatic tired rollers. The wheels shall not wobble and they shall be equipped with pads which will keep the tires wet. The roller shall have an operating weight of not less than 2,000 pounds per wheel. All tires shall be maintained at a uniform pressure between 55 and 90 psi with 5 psi tolerance between tires. A suitable tire pressure gauge shall be readily available.

3.6.3.3 Following the intermediate rolling with a pneumatic tired roller, the courses shall be finish rolled with a three-axle tandem type roller having a locked center drum.

3.6.3.4 Static steel wheeled rollers shall move at a slow but uniform speed with the drive roll nearest the paver except on steep grades which may necessitate reversing this procedure. Rollers shall not operate at speeds in excess of 6 miles per hour, 528 feet per minute. When paving multiple lanes simultaneously, or when paving widths in excess of 16 feet, the Contractor shall furnish additional static steel wheeled and pneumatic-tired rollers as requested.

3.6.4 Control Strip.

3.6.4.1 When constructing the wearing course, a control strip shall be constructed at the beginning of the work for the purpose of establishing the correct rolling pattern that will achieve the required density. Each control strip shall be constructed to acceptable density and surface tolerances and shall remain in place to become portion of the completed roadway. Unacceptable control strips shall be corrected or removed and replaced at the Contractor's expense. A control strip shall be at least 100 linear feet in length and span the width of the freshly placed mat. The materials and the equipment used to construct the control strip, shall be the same as that to be used in the remainder of the course represented by the control strip.

3.6.4.2 Compaction of the control strip shall commence immediately after the course has been placed to the specified thickness. Compaction of the control strip shall continue until no discernable increase in density can be obtained by additional compactive effort. If the mean density following compaction is found to be less than 96 percent of the laboratory density or less than 92 percent of a maximum theoretical density for the material being used, the Engineer may order the construction of another control strip. The mean density shall be determined by averaging the results of 10 nuclear density tests taken at randomly selected sites within the test strip. A new control strip may be ordered by the Engineer or requested by the Contractor when a change in the material or job mix formula is made or if the Engineer has reason to believe that the material being placed, is not representative of the control strip.

3.6.4.3 A control strip will not be required if the total tonnage on the project is less than 500 tons.

3.6.5 Compaction Requirements.

3.6.5.1 Unless otherwise directed, rolling shall begin at the sides and proceed parallel to the road centerline, gradually progressing to the crown of the road. When paving in echelon or abutting a previously placed lane, the longitudinal joint shall be rolled first followed by the regular rolling procedure. On super-elevated curves, the rolling shall begin at the low side and progress to the high side by overlapping of passes parallel to the centerline. All turning of the roller shall be completed on a pavement which has had at least one roller pass. Base and binder courses shall be rolled until all roller marks are eliminated. The wearing course shall be rolled until all roller marks are eliminated and a minimum density of 95 percent of laboratory specimens prepared in accordance with AASHTO T 245 has been obtained.

3.6.5.2 Any displacement occurring as a result of reversing the direction of a roller or from other causes, shall be corrected at once by the use of lutes and addition of fresh mixture when required. Care shall be exercised in rolling not to displace the line and grade of the edges of the bituminous mixture.

3.6.5.3 To prevent adhesion of the mixture to the rollers, the wheels shall be kept properly moistened with water or water mixed with a very small quantities of detergent or other approved material. Excess liquid will not be permitted. All steel rollers shall be equipped with adjustable wheel scrapers.

3.6.5.4 Along forms, curbs, headers and similar structures and other places not accessible to a normal full- sized roller, sidewalk rollers weighing at least 2,000 pounds shall be used. Where rollers are impracticable, the mixture shall be thoroughly compacted with heated or lightly oiled tampers.

3.7 Joints.

3.7.1 The first lane placed shall be true to line and grade and shall be trimmed by hand to a stringline if necessary, to obtain a true longitudinal joint. Material not trimmed away shall be packed against the lane by means of lutes, leaving a uniform joint with a vertical or nearly vertical face. Outside joints in subsequent lanes shall be similarly trued as directed. Unless otherwise shown on the plans, the longitudinal wearing course joint shall be in the center of the pavement and joints of other courses, shall be offset approximately 6 inches.

3.7.2 The material being placed next to a previously placed lane shall be tightly crowded against the face of the abutting lane. The finishing machine shall be positioned so that in spreading, the material will overlap the edge of the first lane by 1 to 2 inches and shall be left sufficiently high to match the first laid lane after compaction. The overlapped material shall be crowded to the joint with a lute prior to rolling.

3.7.3 Placing of the course shall be as nearly continuous as possible keeping the number of transverse joints at a minimum while still being able to make a hot longitudinal joint.

3.7.4 If a bulkhead is not used to form the transverse joint, the previously laid material shall be cut back to the designed slope and grade of the course. The joint face shall be coated with approved bituminous material before the fresh mixture is placed against it. Extreme care shall be taken to insure that no unevenness occurs at the joint. If unsatisfactory riding qualities are obtained at the transverse joint in the wearing course, the joint shall be corrected by an approved method.

3.7.5 Contact surfaces of cold joints shall be painted with an approved bituminous material. This includes longitudinal, transverse and other joint faces that are ordered by the Engineer which are too cold for proper bonding.

3.8 Surface Tolerances.

3.8.1 The Contractor shall furnish and have available a 10 foot metal straightedge at the paver at all times during paving operations. All courses shall be tested with the straightedge laid parallel to the centerline and any variations from a true profile exceeding 3/16 of an inch, shall be satisfactorily eliminated. The finished surface of the pavement shall be uniform in appearance, free from irregularities in contour and shall present a smooth riding surface.

3.9 Replacement.

3.9.1 If any imperfect places are found in any course, the Contractor shall remove the unsatisfactory material and replace it with satisfactory material after coating the exposed edges with suitable bituminous material.

3.10 Application of Requirements.

3.10.1 Except as specifically noted, these construction requirements shall apply equally to all courses.

3.11 Finished Appearance.

3.11.1 Any bituminous material remaining on exposed surfaces of curbs, sidewalks or other masonry structures, shall be removed by sandblasting at the Contractor's expense.

Method of Measurement

4.1 Plant mix bituminous pavement will be measured by the ton to the nearest 0.1 of a ton, and in accordance with 108.01. Batch weights will be permitted as a method of measurement only when the provisions of 3.4.3 are met in which case, payment will be based on the cumulative weight of all the batches. The tonnage shall be the weight used in the accepted pavement and no deduction will be made for the weight of bituminous material or additives in the mixture.

4.1.1 Due to possible variations in the specific gravity of the aggregates and to possible field changes in areas to be paved, the tonnage used may vary from the proposal quantities and no adjustment in contract unit prices will be made because of such variation.

4.2 Bituminous concrete removed because of faulty workmanship or admixture of foreign materials, will not be included in the pay tonnage.

Basis of Payment

5.1 All work performed and measured as prescribed above will be paid for as provided in the respective sections for each type specified.

5.2 Tack coat material ordered under 3.5.5 will be subsidiary to the paving items.

5.3 Approved bituminous material ordered for the coating of contact surfaces and joints as specified will be subsidiary.

SECTION 403 -- HOT BITUMINOUS PAVEMENT

Description

1.1 This work shall consist of constructing one or more courses of bituminous pavement on a prepared base as shown or ordered. The methods may be classified as hand or machine.

1.1.1 Hand method shall include only the paving of raised islands, slopes, areas between rails at railroad crossings, existing sidewalks, drives, drive aprons control patch between granite curb and pavement, and paving of 50 tons or less added after the completion of paving operations.

1.1.2 Machine method shall include all paving not classified as hand method.

Materials

2.1 Materials and their use shall conform to the requirements of 401.2.

2.1.1 The required grading for base courses shall conform to 401, Table 2, Type B.

2.1.2 The required grading for wearing courses shall conform to 401, Table 2, Type F.

2.1.3 The required grading for single course pavement shall conform to 401, Table 2, single course, Type D.

Construction Requirements

3.1 Construction requirements shall be as prescribed in 401.3.

Method of Measurement

4.1 Hot bituminous pavement will be measured as prescribed in 401.4.

Basis of Payment

5.1 The accepted quantities of hot bituminous pavement will be paid for at the contract unit price per ton for the bituminous mixture, complete in place.

5.2 Single course pavement shall be paid under either machine or hand method as prescribed in 1.1.

Pay Items and Units:

403.11	Hot Bituminous Pavement, Machine Method	Ton

403.119	Hot Bituminous Pavement, Machine Method (Night)	Ton
403.12	Hot Bituminous Pavement, Hand Method	Ton
403.129	Hot Bituminous Pavement, Hand Method (Night)	Ton
403.21	Hot Bituminous Pavement, Aggregate 25 percent, Wear, Machine Method	Ton
403.22	Hot Bituminous Pavement, Aggregate 25 percent, Wear, Hand Method	Ton
403.51	Hot Bituminous Pavement, Aggregate 50 percent, Wear, Machine Method	Ton
403.52	Hot Bituminous Pavement, Aggregate 50 percent, Wear, Hand Method	Ton

SECTION 404 -- PAVEMENT RESTORATION

Description

1.1 This work shall consist of the permanent restoration of bituminous pavement and base materials removed to facilitate the construction of sewer, drainage and other underground facilities within the limits of existing roadways and easements.

1.2 This work shall also consist of the temporary restoration of bituminous pavement as designated on the plans or ordered.

Materials

2.1 Bituminous pavements shall conform to the requirements of Section 403. Base materials shall conform to the requirements of Section 304 Asphalt emulsion shall conform to RS-1 as specified in Section 702, Table 2.

Construction Requirements

3.1 The existing pavement shall be cut back from the top of the trench walls so that a minimum of 2 feet of new pavement will be placed over undisturbed material.

3.1.1 The pavement shall be cut to a neat line with a diamond saw or as approved by the Engineer.

3.1.2 Existing pavement and any temporary material shall be removed from within the limits of the final saw cuts.

3.2 Bituminous pavement shall be placed in accordance with the requirements of 401.3.

3.2.1 Bituminous pavement for permanent restoration shall be constructed to a depth equal of the thickness of the existing pavement (3 inches minimum). Where and overlay is proposed, bituminous pavement for permanent restoration shall be constructed to a depth equal to the total thickness of the existing pavement (4 inches minimum) with one inch of this thickness to be the wearing course.

3.2.1.1 The compacted base course shall be 1 inch less in thickness than the total thickness of the existing pavement (2 inches minimum).

3.2.1.2 The compacted wearing course shall be 1 inch in thickness.

3.2.1.3 The face of all joints shall be painted with asphalt emulsion immediately prior to placing the new pavement.

3.2.2 Bituminous pavement for temporary restoration shall be single course pavement, hand method, 1-1/2 inches in thickness and shall be constructed within the limits of the initial pavement cuts.

3.3 Aggregate base course materials shall be placed in accordance with the requirements of 304.3.

3.3.1 Base course materials shall consist of gravel and crushed gravel and shall be constructed for the full width of the trench to the undisturbed material.

3.3.1.1 The compacted depth of the gravel course shall be 12 inches.

3.3.1.2 The compacted depth of the crushed gravel course shall be 9 inches. When temporary pavement restoration is to be constructed, the compacted depth of the crushed gravel course shall be 10-1/2 inches.

3.3.1.3 In lieu of the 12 inch gravel course, a total depth of 18 inches of crushed gravel may be constructed, except that roadways typically having 9 inches of crushed gravel and 12 inches of gravel, must be restored in kind.

3.4 Pavement restoration shall be promptly completed and shall be maintained until the project has been accepted.

Method of Measurement

4.1 Unless otherwise shown on the plans or approved, the maximum allowable widths for computing pavement restoration for pipe construction shall be as follows:

For Trenches 0 to 10 Feet Deep:

Pipe I.D.	Base Materials	Pavement
Up to 12 inches	6 feet	10 feet
12 inches-24 inches	7 feet	11 feet
Over 24 inches	8 feet	12 feet

For trenches over 10 feet deep, add 0.5 feet of width for each additional foot of depth.

4.2 Unless otherwise shown on the plans or approved, the maximum allowable diameters for computing pavement restoration for structures, shall be as follows:

For Excavations 0 to 10 Feet Deep:

Structure I.D.	Base Materials	Pavement
4 feet	7 feet	11 feet

5 feet	8 feet	12 feet
6 feet	9.5 feet	13.5 feet
7 feet	10.5 feet	14.5 feet
8 feet	11.5 feet	15.5 feet

For excavations over 10 feet deep, add 1 foot to the diameter for each additional foot of depth.

4.3 Restored areas will be measured by the square yard of pavement to the nearest 0.1 of a square yard in accordance with 4.1 and 4.2.

Basis of Payment

5.1 The accepted quantities of pavement restoration will be paid for by the square yard.

Pay Items and Units:

404.1	Pavement Restoration	S.Y.

SECTION 410 -- BITUMINOUS SURFACE TREATMENT

Description

1.1 This work shall consist of preparing and applying one or more prime or seal coats of bituminous material to a gravel or stone course. This work shall also consist of a tack coat applied to a bituminous concrete surface or a portland cement concrete surface.

Materials

2.1 Bituminous material shall be the type and grade specified or ordered and shall conform to the requirements of AASHTO M 140 or M 208.

2.2 Blotter material shall be natural sand composed of hard, durable particles, free from loam showing uniform resistance to abrasion. Gradation shall conform to 520 Table 2.

Construction Requirements

3.1 Limitations. Bituminous material shall not be applied on a wet surface or when weather conditions would prevent the proper application and curing of the coat. The quantities, rate of application, temperatures and areas to be treated, shall be approved before application of bituminous material.

3.2 Equipment. Equipment required for this work shall be as follows:

(a) A distributor shall be so designed, equipped, maintained and operated such that bituminous material at even heat may be applied uniformly on variable widths of surface up to 24 feet, at readily determined and controlled rates from 0.02 to 2.0 gallons per square yard, with uniform pressure, and with an allowable variation from any specified rate not to exceed 0.02 gallons. Distributor equipment shall include a tachometer, pressure gages, accurate volume measuring devices or a calibrated tank, and a thermometer for measuring temperatures of tank contents. Distributors shall be equipped with a power unit for the pump and full circulation spray bars adjustable laterally and vertically. The spray bar shall contain spray nozzles providing a fan-shaped spray pattern adjusted so the vertical axis is perpendicular to the pavement surface. The spray pattern and spray bar height shall be adjusted to provide a uniform application of the tack coat without double coverage. The distributor shall be equipped with a mechanical device to adjust the spray height as material is discharged to keep a uniform height above the pavement for full coverage without overlapping. The distributor shall also be equipped with a hand-held spray attachment for applying the material to areas inaccessible to spray bars and to fill in irregular areas to provide full coverage. Approved sampling valves shall be installed in distributors and transport tank trucks to permit taking representative samples of the contents. The recommended location of the sampling valve is in the rear bulkhead of the tank, roughly one-third of the height above the bottom. The inlet pipe shall project into the contained liquid as shown in AASHTO T 40. At least one quart of

material shall be drained off through the sampling valve and discarded before the desired sample is taken. New sample containers will be furnished by the Engineer. To prevent the loss of solvents, containers shall be sealed with a tight fitting cover immediately after being filled.

(b) A rotary power broom for sweeping treated surface.

(c) A steel-wheeled roller.

(d) A self-propelled pneumatic-tired roller.

(e) A sand spreader capable of spreading blotter material in just sufficient quantity to prevent traffic pick- up of the applied bituminous material.

(f) A steel brush drag of an approved type.

3.3 Preparation of Surface to be Treated.

3.3.1 Prime Coat. The surface to be primed shall be shaped to the required grade and section, shall be free from all ruts, corrugations, segregated material or other irregularities and shall be uniformly compacted in accordance with 304.3.6.

3.3.1.1 Immediately before applying the prime coat, the surface shall be loosened slightly by dragging with a steel brush drag.

3.3.2 Tack Coat. The existing surface shall be patched and shall be free of irregularities to provide a reasonably smooth and uniform surface to receive the treatment. Unstable corrugated areas shall be removed and replaced with suitable patching materials. The edges of existing pavements which are to be adjacent to new pavement, shall be cleaned to permit the adhesion of bituminous materials.

3.4 Application of Bituminous Material.

3.4.1 Prime Coat. Bituminous material shall be applied to the width of the section to be primed by means of a pressure distributor in a uniform, continuous spread. When traffic is maintained not more than 1/2 of the width of the section shall be treated in one application. Care shall be taken that the application of bituminous material at junctions is not in excess of the specified amount. Excess material shall be squeegeed from the surface. Skipped areas or deficiencies shall be corrected.

3.4.1.1 When traffic is maintained, one-way traffic shall be permitted on the untreated portion of the roadbed. As soon as the bituminous material has been absorbed by the surface and will not pick up, traffic shall be transferred to the treated portion and the remaining width of the section shall be primed.

3.4.2 Tack Coat. Bituminous material shall be uniformly applied with an approved applicator. When ordered, a pressure distributor shall be used. The tack coat shall be applied to offer the least inconvenience to traffic and to permit one-way traffic without pickup or tracking of the bituminous material.

3.4.2.1 A tack coat shall be applied, prior to placement of pavement when the underlying pavement is weathered, has gon e through a winter, or is contaminated with any bond inhibiting material. The rate of application of emulsified asphalt shall be between 0.02 and 0.05 gal/sq. yd., as determined by the Engineer depending on the relative absorbence and texture of the pavement surface.

3.5 Application of Blotter Material. If after the application of the prime coat, the bituminous material fails to penetrate within the time specified and the roadway must be used by traffic, blotter material shall be spread in the amounts required to absorb excess bituminous material. Care shall be taken not to cover a 6 inch strip next to the centerline of the road until the untreated area has received the first application of bituminous material.

3.5.1 When the entire width of the surface has been treated with bituminous and blotter material, it shall be dragged with a steel brush drag. The surface shall be brushed only the amount necessary to distribute the blotter material uniformly.

3.5.2 When ordered, the entire treated surface shall be rolled until the materials are thoroughly bonded.

3.5.3 Sufficient extra blotter material shall be applied whenever necessary to prevent traffic and the roller from picking up the bituminous material.

3.5.4 Additional brush dragging may be required to keep the blotter material uniformly distributed until the bituminous material is thoroughly cured.

3.5.5 The primed surface shall be kept in repair. All holes ravels and deficient areas shall be patched and repaired with bituminous treated materials as approved.

3.5.6 When the bituminous material is thoroughly cured, blotter material remaining on the treated area shall be removed by sweeping with an approved power broom. This operation must be accomplished before subsequent application of any seal coat.

3.6 Seal Coat.

3.6.1 When directed, a seal coat shall be applied at the gallon rate per square yard specified on the plans or ordered, and by the same method as the prime coat.

3.6.2 Blotter material at the rate ordered shall be applied before the bitumen has set; the entire treated surface shall be dragged, rolled and maintained and the remaining blotter material shall be removed all by the same methods as specified for the prime coat.

3.7 Finished Appearance.

3.7.1 Any bituminous material splashed or sprayed onto exposed surfaces of curbs, sidewalks or other masonry structures shall be removed by sandblasting at the Contractor's expense.

Method of Measurement

4.1 Bituminous material will be measured by the ton or gallon, and in accordance with 109.01 Measurements by the ton will be made to the nearest 0.1 of a ton.

4.2 Blotter material furnished will be subsidiary.

Basis of Payment

5.1 The accepted quantities of bituminous surface treatment will be paid for at the contract price per ton or gallon for bituminous material complete in place.

5.2 Payment for patching existing pavements under 3.3.2 will be made at the contract unit price for 403. or 411.1 as ordered.

Pay items and units:

410.21	Emulsified Asphalt for Tack Coat	Ton
410.22	Emulsified Asphalt for Tack Coat	Pound
410.31	Asphalt Surface Treatment Including Blotter Material	Ton
410.41	Emulsified Surface Treatment Including Blotter Material	Ton

SECTION 411 -- PLANT MIX SURFACE TREATMENT

Description

1.1 This work shall consist of a leveling course when ordered and one or more courses of bituminous mixture constructed on an existing pavement.

Mixture

2.1 Materials and their use shall conform to the requirements of 401.2 as amended below:

2.1.1 Bituminous materials for mixtures shall be asphalt cement or asphalt emulsion as specified. Unless otherwise ordered, the grade shall be as specified below:

2.1.1.1 Asphalt cement shall be AC-10 and conform to the requirements of 702, Table 1.

2.1.1.2 Asphalt emulsion shall be HFMS-2 and conform to the requirements of 702, Table 2.

2.1.2 Unless otherwise directed the composition of the mixtures shall fall within the limits of the master ranges set forth in Table 401-1 or Table 401-2 as appropriate.

Table 401-1 - Composition of Mixture -- Master Ranges
Leveling Course

Sieve Size	Percentage by Weight Passing		
	Min.	Desired	Max.
3/8 in	95	100	100
No. 4	75	80	100
No. 10	55	60	65
No. 20	30	40	50
No. 40	14	20	26
No. 80	6	10	14
No. 200	2	4	6
Asphalt Cement: percentage of Total Mix	6.25	6.7	7.25

Table 401-2 - Composition of Mixture -- Master Ranges
Plant Mixed Surface Treatment

	Using Asphalt Cement						Using Emulsion		
	3/8 Inch Course			5/8 Inch Course			5/8 Inch Course		
Sieve Size	Percentage by Weight Passing								
	Min.	Desired	Max.	Min.	Desired	Max.	Min.	Desired	Max.
3/8 in	---	---	---	---	100	---	---	100	---
No. 4	---	100	---	85	92	100	85	92	100
No. 10	72	82	92	65	75	85	65	75	85
No. 20	43	54	65	40	50	60	38	49	60
No. 40	23	33	43	20	30	40	16	26	36
No. 80	9	14	21	8	12	20	4	8	12
No. 200	2	4	6	2	4	6	0	2	3
	Percentage of Total Mix								
	Min.	Desired	Max.	Min.	Desired	Max.	Min.	Desired	Max.
Asphalt Cement	---	---	---	6.5	7.0	7.5	---	---	---
or									
Asphalt Cutback	6.5	7.0	7.5	6.5	7.0	7.5	---	---	---
Asphalt Emulsion	---	---	---	---	---	---	8.0	9.0	10.0
(Bitumen by Extraction)	---	---	---	---	---	---	5.4	6.1	6.8

2.1.3 When permitted, asphalt cement may be substituted for asphalt emulsion.

2.1.4 Blotter materials shall be sand conforming to the requirements of Table 401-3.

Table 401-3 -- Blotter Material

Sieve Size	Percent by Weight Passing
No. 4	100
No. 10	70 - 92
No. 200	0 - 6

Construction Requirements

3.1 Mixing plants shall be as prescribed in 401.3.1 except that the second sentence of 401.3.1.4.5 will not apply for plants producing plant mix surface treatment. A 3/16 inch screen will be required in preparing the aggregate for the 3/8 inch course. However, the Engineer may waive this requirement when small quantities are involved.

3.2 Mixing and storage shall conform to 401.3.1.4.11, 401.3.2 and 401.3.3 with the following modifications.

3.2.1 The temperature of the asphalt emulsion shall be 120-160 degrees F. The temperature of the mixture in the truck shall be 210-230 degrees F.

3.2.2 If the aggregate contains sufficient moisture to cause foaming in the mixture, it shall be removed from the bins. The quantity of cold aggregate fed to the dryer shall be governed by the ability of the dryer to completely remove the moisture from the aggregate, as determined by the Engineer.

3.3 Weighing and hauling shall conform to 401.3.4.

3.4 Placing shall conform to 401.3.5 with the following modifications:

3.4.1 The existing pavement shall be thoroughly dry, and free from all dust, dirt, and loose material. Sweeping with a power broom supplemented by hand brooming may be required.

3.4.2 When ordered, the existing pavement shall be treated as prescribed in 410.3.3.

3.4.3 A leveling course of hot bituminous concrete may be ordered to prepare the pavement for the finish course.

3.4.4 Any material delivered to the spreader having a temperature lower than 200 degrees F for emulsion mixture or 250 degrees F for asphalt cement mixture shall not be used.

3.4.5 In those areas where the edges of the pavement are adjacent to paved or bituminous treated shoulders, the asphalt paving machine shall be equipped to produce a feathered edge, parallel to the direction of traffic, and a uniform longitudinal line shall be maintained at the outer edge of the applied pavement.

3.4.6 All bridges included within the limits of the work shall be treated curb to curb.

3.5 Compaction shall conform to 401.3.6 with the following modifications.

3.5.1 If necessary to prevent traffic pickup of the mixture, the surface of the work shall be given a light dusting of blotter material just prior to rolling with pneumatic-tired roller. The surface shall be maintained thereafter by occasional back sanding and rolling as directed.

3.5.2 When more than 125 tons of mixture is being placed per hour, and additional steel-wheeled roller will be required.

3.5.3 The use of a three-axle roller for final rolling will not be required.

3.5.4 Excess of blotter material remaining on the pavement and on paved shoulders shall be removed prior to acceptance of the project.

3.5.5 After rolling has been completed, the edges of the pavement shall be trimmed as directed to secure a uniform line.

3.6 Surface tolerances specified in 401.3.8 will not apply to plant mix surface treatment.

Method of Measurement

4.1 Plant mix surface treatment will be measured as prescribed in 401.4.

4.2 Blotter material used on plant mix surface treatment will be subsidiary.

Basis of Payment

5.1 The accepted quantities of leveling course and plant mix surface treatment will be paid for at the contract unit price per ton complete in place. Material ordered under 3.4.2 will be paid for under 410.

Pay Items and Units:

411.1	Hot Bituminous Concrete Leveling Course	Ton
411.19	Hot Bituminous Concrete Leveling Course (Night)	Ton
411.35	Plant Mix Surface Treatment (Emulsion), 5/8 inch	Ton
411.43	Plant Mix Surface Treatment (Asphalt Cement), 3/8 inch	Ton
411.44	Plant Mix Surface Treatment (Asphalt Cement), 1/2 inch	Ton
411.45	Plant Mix Surface Treatment (Asphalt Cement), 5/8 inch	Ton
411.46	Plant Mix Surface Treatment (Asphalt Cement), 3/4 inch	Ton

SECTION 413 --HOT-POURED CRACK SEALANT

Description

1.1 This work shall consist of furnishing labor, equipment and materials necessary for the performance of all operations including re-shaping, cleaning, filling and sealing of random cracks in bituminous concrete pavements, vegetation removed and sterilization of cracks where necessary at locations specified and/or as directed by the Engineer.

Materials

2.1 Crack sealer shall be an asphalt fiber-compound designed especially for improving strength and performance of the parent asphalt sealant.

a. Asphalt sealant shall be AC-10 or AC-20 with a penetration of 75-100.

b. Fiber reinforcing materials shall be short-length polypropolene or polyester fibers, having the following properties:

Length	10 mm
Denier	15 dpf
Color	natural
Crimp	none
Tenacity	4 g.p.d.

Asphalt fiber compound shall be mixed at a rate of 5-8% fiber weight to weight of asphalt cement. This compound having the same chemical base provides compatibility and exhibits excellent bond strengths. The fiber functions to re-distribute high stress and strain concentrations that are imposed on the sealant by thermal sources, traffic loading, etc….

Equipment

Equipment used in the performance of the work required by this section of the specification shall be subject to the Engineer and maintained in a satisfactory working condition at all times.

a. *Air Compressor:* Air compressors shall be portable and capable of furnishing not less than 100 cubic feet of air per minute and not less than 90 lbs per square inch pressure at the nozzle. The compressor shall be equipped with traps that will maintain the compressed air free of oil and water.

b. *Manually operated equipment.* Gas powered air broom or self-propelled sweeper designed especially for use in cleaning highway and airfield pavements, shall be used to remove debris, dirt and dust from cracks.

c. *Hand tools.* Shall consist of brooms, shovels, metal bars with chisel shaped ends and any other tools which may be satisfactorily used to accomplish this work.

d. *Melting Kettle:* The unit used to melt the joint sealing compound shall be double boiler, indirect fired type. The space between the inner and outer shells shall be filled with a suitable heat transfer oil o r substitute having a flash point of not less than 600 degrees F. the kettle shall be equipped with a satisfactory means of agitating the joint sealer at all times. This may be accomplished by continuous stirring with mechanically operated paddles and/or by a continuous circulating gear pump attached to the heating unit. The kettle must be equipped with thermostatic control calibrated between 200 degrees F. and 550 degrees F.

Preparation:

Debris Removal: All old materials and other debris removed from the cracks shall be removed from pavement surface immediately by means of power sweepers and hand brooms or air brooms.

Vegetation: When cracks show evidence of vegetation it shall be removed and sterilized by use of propane torch unit eliminating all vegetation, dirt, moisture and seeds.

General: No crack-sealing material shall be applied in wet cracks or where frost, snow or ice is present nor when ambient temperature is below 40 degrees F at night. Daytime temperatures must be in excess of 60 degrees F.

Preparation of Sealer: Joint sealing material shall be heated and applied at a temperature specified by the manufacturer and approved by the Engineer.

Measurement and Payment

Measurement for this bid unit shall be by the gallon and shall be the actual number of gallons of sealer applied to the pavement. Payment shall be set at the unit price provided the proposal and shall be complete payment for the entire item including furnishing, preparation and placing of materials, labor and equipment to be used on this project and all incidental items which may be required to complete the work in a satisfactory manner.

Pay item and unit:

1	Crack-sealing, Hot Reinforced Fiber, Complete-in-Place	Gallon

SECTION 417 -- COLD PLANING OF BITUMINOUS SURFACES

Description

1.1 This work shall consist of the removal of existing bituminous pavement by planing or milling type equipment to the depth and grade shown on the plans or ordered. Equipment

Equipment

2.1 Equipment used for planing of bituminous surfaces shall be a power operated rotary planing or milling machine capable of uniformly removing the existing bituminous surfaces.

Construction Requirements

3.1 The existing bituminous surface shall be removed by planing or milling machine capable of removing in one or more passes, bituminous material to the depth specified. The equipment shall be capable of accurately establishing profile grades by an automatic grade control system referencing from either the existing pavement or from an established independent grade line.

3.1.1 The equipment shall have an effective means for controlling dust.

3.2 Material removed during this operation, shall be transported and stockpiled for use as directed.

3.3 The Contractor shall supply sufficient lighting to ensure that night cold planning operations meet the requirements of 3.1 and allow for inspection.

Method Of Measurement

4.1 Cold planing of bituminous surfaces as shown on the plans or ordered will be measured by the square yard as determined by the actual surface measurements of the lengths and widths of the bituminous areas removed.

4.1.1 The nominal depth of material removed will be as shown on the plans.

Basis Of Payment

5.1 The accepted quantities of cold planing bituminous surfaces to the nominal depth specified, will be paid for at the contract unit price per square yard.

5.1.1 No separate payment will be made for any cost of project lighting or overtime necessary due to night operations.

Pay Item and Unit:

417.	Cold Planing of Bituminous Surfaces	Square Yard
417.19	Cold Planing of Bituminous Surfaces (Night)	Square Yard

DIVISION 500 - STRUCTURES

SECTION 520 -- PORTLAND CEMENT CONCRETE

1 DESCRIPTION
1.1 General
1.2 Classes of Concrete
2 MATERIALS
2.1 Cement
2.2 Aggregates
2.3 Chemical Admixtures
2.4 Blank
2.5 Water
2.6 Curing Materials for Concrete
2.7 Preformed Expansion Joint Fillers for Concrete
2.8 Concrete Bonding Agent
2.9 Storage of Concrete Materials
2.10 Concrete Mixes
3 CONSTRUCTION REQUIREMENTS
3.1 Proportioning and Batching
3.2 Forms and Falsework
3.3 Weepers and Drains
3.4 Ready-Mixed Concrete
3.5 Placing Concrete
3.6 Joints
3.7 Concreting in Cold Weather
3.8 Concreting in Hot Weather
3.9 Finishing Plastic Concrete
3.10 Curing Concrete
3.11 Loading Concrete
3.12 Finishing
4 METHODS OF MEASUREMENT
5 BASIS OF PAYMENT

Description

1.1 General. This work shall consist of furnishing and placing portland cement concrete as shown on the plans or ordered.

1.2 Classes of Concrete. The following classes of concrete are included in these specifications:

Table 520-1 -- Classes of Concrete

Class	Minimum Expected 28 Day Compressive Strength [1]	Minimum Amt. of Cement Per Cu. Yd. of Concrete [2]	Maximum Water/Cement Ratio [3]	Percent Entrained Air
Class	**PSI**	**LBS**		**%**
AA [4]	4000	658	0.380	5 to 8
AA	4000	658	0.444	5 to 8
A	3000	611	0.464	4 to 7
B	3000	564	0.488	3 to 6
T [5]	3000	620	0.559	---
C	2000	489	0.532	

[1] See 3.1.6 TESTING.

[2] The cement content of concrete to be pumped shall be increased by 0.5 bag per cubic yard (one bag weighs 94 pounds).

[3] For fly-ash mixtures, the water/cement ration of the concrete mix will be based on the water cementitious (cement + fly-ash) ratio of the mix. The water to cementitious ratio shall not exceed those listed in Table 520-1, less 0.02. The maximum water/cement ratios listed for Concrete Class B and T are for design purposes only.

[4] When high range water reducing admixture is specified.

[5] Fly-ash not allowed in Class T.

1.2.1 Unless otherwise shown on the plans, the specified class of concrete shall be used in the following applications.

(a) Footing concrete shall be Class B.
(b) Concrete above footings shall be Class A.
(c) Abutment backwall concrete shall be Class AA.
(d) Concrete bridge decks shall be Class AA.
(e) Concrete foundation seals shall be Class T.

1.2.2 Retarding admixtures and high range water reducing (HRWR) shall not be used in deck concrete when the existing air temperature is below 10 C (50 F) or forecasted to drop below 10 C (50 F) within 24 hours after completion of placement.

1.2.3 The use of high range water reducing admixture may be required or used to expedite construction.

Materials

2.1 Cement.

2.1.1 Portland Cement shall be Type II or Type IV conforming to AASHTO M85 or M 240 as appropriate, unless otherwise shown on the plans or permitted. Mill test reports shall be furnished with each delivery of cement.

2.1.2 Cement used in visible portions of the work shall be the same brand, type and color unless otherwise permitted.

2.1.3 Cement containing lumps or partial set, shall not be used.

2.2 Aggregates.

2.2.1 General.

2.2.1.1 All aggregates shall be thoroughly washed unless otherwise permitted. Aggregates shall be stockpiled for a minimum of 24 hours before use.

2.2.1.2 The Contractor shall make arrangements for the Engineer to secure samples from all stockpiles in sufficient time to complete testing and mix design prior to starting concrete operations. If the stockpiles aggregates are approved, similar aggregates from the same sources will be considered acceptable, subject to restrictions of the item for which the aggregates are to be used. No change in the source or character of the aggregates shall be made without prior notification to and approval by the Engineer. Failure of any test taken prior to starting each placement will result in cancellation of the placement until corrective measures have been taken and the aggregates have been approved.

2.2.1.3 Unless frozen aggregates are dispersed during mixing, they shall not be permitted.

2.2.2 Fine Aggregate.

2.2.2.1 Fine aggregate shall consist of sand, stone screenings or other inert materials with similar characteristics or a combination thereof. Tests for organic impurities shall be in accordance with AASHTO T 21 and T 71.

2.2.2.2 Required Grading:

Table 520-2 -- Fine Aggregate

Sieve Size	Percentage by Weight Passing
3/8 inch	100
No. 4	95 - 100
No. 16	45 - 80
No. 50	10 - 30

No. 100	2 - 10
No. 200	0 - 3

2.2.2.2.1 The gradation of fine aggregate from any source shall be reasonably uniform and the fineness modulus as determined by AASHTO M 6 shall lie between 2.5 and 3.1. Fine aggregate showing a variation in fineness modulus greater than 0.2 above or below that upon which the mix was designed, may be rejected.

2.2.3 Coarse Aggregate.

2.2.3.1 Coarse aggregate shall consist of crushed stone, gravel or other approved inert materials with similar characteristics or combinations thereof, having hard, strong, durable particles free from surface coating and injurious amounts of soft, friable or laminated pieces and free of alkaline, organic or other harmful matter. Material passing the No. 200 sieve as determined by AASHTO T 11 shall not exceed 10 percent by number as determined by Corps of Engineers Specifications CRD-C119, on a 3 to 1 ratio and a minimum of 100 particles. The percent of wear shall not exceed 40 as determined by AASHTO T 96.

2.2.3.2 Required Grading:

Table 520-3 -- Coarse Aggregate

Class of Concrete	A [1], B, and T	A and AA	Overlay
Std. Stone Size	467	67	89
Nominal Size	1-1/2" to No. 4	3/4" to No. 4	3/8" to No. 16
SIEVE SIZE	PERCENTAGE by WEIGHT PASSING		
2 inch	100		
1-1/2 inch	95-100		
1 inch		100	
3/4 inch	35-70	90-100	
1/2 inch			100
3/8 inch	10 - 30	20-55	90-100
No. 4	0-5	0-10	20-55
No. 8		0-5	5-30
No. 16			0-10
No. 50			0-5

[1] 1-1/2 inch maximum size coarse aggregate for Class A concrete may only be used with approval of the Engineer.

2.2.3.3 Unless otherwise specifically permitted, coarse aggregate shall be furnished and stockpiled in a minimum of 2 sizes and the amount of each size to be used shall be determined

by combining the individual gradations of each stockpile mathematically to provide a well graded mixture conforming to Table 520-3.

2.2.4 Fly-Ash and Ground Granulated Blast Furnace Slag.

2.2.4.1 Fly-ash shall normally conform to Class F as described in AASHTO M 295 and shall meet the requirements of 2.2.4.3. If the Contractor proposes to use Class C fly-ash, the Contractor shall submit to the Department its design mix, which shall include the percent substitution, ratio of substitution and water-cementitious ratio, and shall meet the other requirements of this section. Ground Granulated Blast Furnace Slag (GGBFS) shall be Grade 120 slag meeting the requirements of AASHTO M 302.

2.2.4.1.1 Only one source of fly-ash or ground granulated blast furnace slag shall be used on any one project.

2.2.4.2 The Contractor is required to supply the Engineer with written notification as to the details of supply of fly-ash or ground granulated blast furnace slag and a request for acceptance consideration of tile fly-ash or ground granulated blast furnace slag. The notification shall include: Fly-ash or ground granulated blast furnace slag source and the name and address of the company supplying the fly-ash or ground granulated blast furnace slag, and the name and telephone number of the individual who will be responsible for the company in coordinating the sampling and acceptance considerations of the fly-ash or ground granulated blast furnace slag.

2.2.4.3 Requirements. Fly-ash shall conform to the chemical, physical and methods of sampling and testing requirements of AASHTO M 295 except in the optional physical requirement, the multiple factor shall be 120 percent maximum. In addition, the fly-ash shall be subjected to the Air-Entrainment of Mortar Test as listed in ASTM C 311 and shall conform to the requirements as listed in the optional physical requirements of AASHTO M 295 for the uniformity requirements. Ground granulated blast furnace slag shall conform to the chemical, physical, and methods of sampling and testing requirements of Ground Iron Blast Furnace Slag for Use In Concrete and Mortars as listed in AASHTO M 302 except that the slag shall meet the requirement for slag activity index Grade 120.

2.2.4.4 Certification. The Contractor shall furnish the Engineer three copies of the materials test results and certification from each fly-ash or ground granulated blast furnace slag source proposed for use. The certification shall state the fly-ash or ground granulated blast furnace slag used on the project meets the requirement as stated in 2.2.4.3 and shall be for a specific, identifiable quantity.

2.2.4.5 Fly-ash or ground granulated blast furnace slag concrete shall be used only when placing concrete during the months of April to October unless special precautions are taken. Winter use of fly-ash or ground granulated blast furnace slag concrete (November through March) shall be continuously cured and kept from freezing until strength requirements are achieved.

2.3 Chemical Admixtures

2.3.1 Air entraining admixtures shall meet the requirements of AASHTO M 154.If the Contractor requests permission to use an unfamiliar air entraining admixture, evidence shall be submitted to prove that the admixture complies with AASHTO M 154. The evidence shall be based on tests performed in a laboratory of a State Highway Department, the FHWA, or in a laboratory which is regularly inspected by the Cement and Concrete Reference Laboratory of the National Bureau of Standards. Tests may be made upon samples taken from a quantity submitted by the Contractor for use on the project or upon samples submitted and certified by the manufacturer as representative of the admixture to be supplied.

2.3.1.1 When using high range water reducing admixture the air entrainment admixture shall be Vinsol Resin or approved equal conforming to AASHTO M 154.

2.3.2 Water reducing admixtures shall meet the requirements of AASHTO M 194, Type A.

2.3.2.1 Water-reducing, high-range admixtures shall conform to AASHTO M 194 Type G.

2.3.2.2 Corrosion inhibitor admixture shall conform to AASHTO M 194 (ASTM C 494) Type C.

2.3.3 Water reducing and retarding admixtures (herein referred to as retarding admixtures), shall meet the requirements of AASHTO M 194, Type D.

2.3.4 Calcium chloride may only be used with specific permission of the Engineer.

2.3.5 Chemical admixtures shall be approved by the Engineer.

2.3.6 Admixtures shall be stored in a suitable building in such a manner as to permit easy access and identification and to protect the admixtures from freezing. Admixtures will be rejected if precipitation has occurred in the container.

2.4 Blank.

2.5 Water.

2.5.1 Water for use in concrete shall be free from oils, acids, organic matter or other deleterious substances and shall not contain more than 500 parts per million of chlorides as Cl nor more than 1000 parts per million of sulfates as SO4. In addition water used in portland cement concrete shall be free from iron, tannic acid, and other impurities which may cause staining or discoloration.

Water from municipal supplies approved by the State of New Hampshire Department of Environmental Services will not require testing, but water from other sources will be sampled and tested before being used in concrete, once per source unless otherwise directed. Tests shall be made in accordance with AASHTO T 26.

The hydrogen ion concentration (pH) shall be determined electrometrically or colorimetrically and be between pH 4.5 and pH 8.5.

The water shall not contain any impurities in amounts sufficient to cause unsoundness or marked change m the time of setting in the cement with which it is mixed, nor a reduction mortar strength of more than 10 percent compared to the results obtained with distilled water .

2.6 Curing Materials for Concrete.

2.6.1 Burlap shall conform to AASHTO M 182. The use of worn burlap, burlap with holes or burlap reclaimed from uses other than curing concrete, will not be permitted.

2.6.2 Sheet materials shall be waterproof paper, polyethylene film or white burlap-polyethylene sheeting conforming to AASHTO M 171.

2.6.3 Liquid curing compound shall be Type ID, Class B or Type 2, Class B conforming to AASHTO M 148 except as modified herein. The vehicle shall have a resin base and contain no waxy compounds. The compound shall dry to touch within 4 hours when applied at the rate of 1 gallon per 200 square feet of concrete.

2.6.4 Water for curing shall meet the requirements of 2.5, above.

2.7 Preformed Expansion Joint Fillers for Concrete. Preformed Expansion Joint Fillers for Concrete shall conform to AASHTO M 153, Type II, unless Type III is shown on the plans.

2.8 Concrete Bonding Agent. Concrete bonding agent or acrylic bonding agent to be used as shown on the plans or ordered.

2.9 Storage of Concrete Materials.

2.9.1 The handling and storage of concrete materials shall be such as to prevent their segregation or contamination by foreign materials. When directed, the aggregates shall be stored on suitable platforms or on clean, level, paved surfaces if segregation or contamination continues to occur. Aggregates shall be stored in separate stockpiles sufficiently removed from each other to prevent the aggregates from becoming intermixed. To prevent spillage from one bin to the next, buckets used to fill the bins shall not be wider than the clear opening of the bins. Evidence of intermixing, segregation or contamination will because for rejection.

2.9.2 Unless otherwise permitted, cement shall be stored in approved weatherproof silos or buildings which will protect the cement from dampness. The floors of the buildings shall be sufficiently clear of the ground to prevent the absorption of moisture. When storage in the open is permitted, the cement shall be placed on raised platforms and completely covered with a waterproof covering.

2.9.3 The locations of the stockpiles and the facilities for storing cement, shall be subject to approval.

2.10 Concrete Mixes.

2.10.1 The concrete mix shall be composed of a mixture of aggregate, cement, water and chemical admixtures as required. The several aggregate fractions shall be sized, uniformly graded and combined in such proportions that the resulting mix meets the grading requirements of Table 520-4 or Table 520-5.

2.10.2 The concrete mix design limits given in Table 520-4 or Table 520-5 indicate the master ranges of mixes permissible under this specification. No work shall be started on a project until the Engineer approves a mix design appropriate for the raw materials and blends of approved aggregates available for the specific project. The mix design shall be within the master ranges indicated for the particular class of concrete specified. The mix design for each mix shall establish a single percentage aggregate passing each required sieve size in accordance with Table 520-4 and Table 520-5, a cement factor and water cement ratio as shown in Table 520-1. Gradings which range from the maximum of one sieve size to the minimum of the next, will not be permitted. The mix design for each mix shall be in effect until modified in writing by the Engineer.

2.10.2.1 Should a change in sources of material be made, a new mix design shall be established before the new material is used. When unsatisfactory results or other conditions make it necessary, the Engineer may establish a new mix design.

2.10.3 Master Ranges for Combined Aggregates.

Table 520-4 -- Coarse Aggregate With Specific Gravity Less Than 2.700

	Concrete Classes* A [1], B, and T			Concrete Classes** A, AA		
Sieve Size	Min.	Desired	Max.	Min.	Desired	Max.
	Percentage by Weight Passing			Percentage by Weight Passing		
1-1/2 inch	95	100	100			
1 inch		80			100	
3/4 inch	56	68	80	64	97	100
1/2 inch		57			77	
3/8 inch	38	46	55	51	62	73
No. 4	31	35	39	37	42	47
No. 8		29			34	
No. 16	16	23	30	19	27	35
No. 30		14			17	
No. 50	4	7	10	4	8	12
No.100	1	2	3	1	2	4
No.200			2			2

*Class A[1], B and T based on fine aggregate content of 32 to 36 percent of the total aggregate.
**Class A and AA based on fine aggregate content of 38 to 42 percent of the total aggregate.

See footnote to Table 520-3

Construction Requirements

3.1 Proportioning and Batching

3.1.1 Proportioning

3.1.1.1 All ingredients shall be measured by weight unless otherwise permitted. Scales shall be approved beam type with a separate tare beam or spring-less dial type, accurate to within 0.5 percent of the total load.

3.1.1.2 Cement shall be weighed on a separate scale. Weights for bagged cement when its use is permitted will be assumed to be 94 pounds; fractional bags shall not be used.

3.1.1.3 Aggregate weights shall be dry weights adjusted for moisture.

3.1.1.4 Mixing water shall consist of free moisture on the aggregates, ice if added, and water added to the batch. Water added to the batch shall be measured by weight or an approved volumetric method to an accuracy of 1 percent. Water meters shall be so installed that they are unaffected by pressure or temperature changes in the water supply. Graduated tanks shall be equipped with outside taps and valves for checking their calibration.

3.1.1.5 Each approved admixture shall be added to a separate portion of the fine aggregate or water as recommended by the manufacturer to eliminate premixing of the additives. Separate calibrated standpipes with positive action discharge tubes, readily visible from the batching area, shall be provided at all concrete producing plants regardless of metering devices.

3.1.1.6 The substitution of fly-ash for cement should not be more than 20 percent by weight unless approved. The substitution of ground granulated blast furnace slag for cement should not be more than 25 percent by weight unless approved. The ratio of substitution of cement to fly-ash or ground granulated blast furnace slag shall be 1:1 by weight. Substitution of fly-ash or ground granulated blast furnace slag shall not be made for blended cements and high early strength cements.

3.1.2 Batching.

3.1.2.1 Batch plants shall meet the requirements of AASHTO M 157 except as modified herein. The plants shall have a minimum of 4 bins: one bin for fine aggregate and one bin for each required size of coarse aggregate. Each bin shall discharge efficiently and freely into the weighing hopper.

3.1.2.2 All new, replaced, or major modification of existing batching plants shall be equipped for fully automatic proportioning and batching of all ingredients including admixtures.

3.1.2.2.1 Automatic batching plants shall be controlled by means of an approved automatic batch selector set to accurately deliver in proper sequence the designed mix proportions and admixtures required for the batch. The batch selector controls shall be locked and sealed during operation. Changes in selector controls or weight settings shall not be made without authorization. Provisions shall be made to vary the size of the batch without affecting the proportions of the design mix.

3.1.2.2.2 All batch equipment in automatic plants shall be interlocked to prevent the discharge of any ingredient into the system until all batching controls have been cleared of the previous batch and the discharge gates and supply valves are closed.

3.1.2.2.3 A moisture meter equipped with automatic adjustable compensating controls shall be installed to accurately and continuously measure the moisture content of the fine aggregate. The moisture compensating dial shall automatically adjust the amount of batch water added and the batch weight of the fine aggregate consistent with the variations of free moisture in the fine aggregate.

3.1.2.2.4 If the automatic proportioning devices become inoperable or malfunction during a concrete placement, the plant may operate manually for the completion of the pour. If the breakdown is readily correctable or is due to a condition within the producer's control, the plant will not be permitted to operate. If unavailability of parts or service or any condition beyond the producer's control exists, written permission may be given to operate the plant manually for a specified period. Accuracy shall be maintained as specified in 3.1.1.

3.1.2.2.5 When concrete with high range water reducing admixture is used 5 ounces of an approved high range water reducing admixture per 100 pounds of cement shall be added at the plant, unless otherwise directed.

3.1.3 Consistency.

3.1.3.1 Mortar proportions shall be kept to the lowest that will provide the desired workability. Mixing water shall be kept to the minimum that will produce the required consistency as measured in accordance with AASHTO T 119, as modified in 3.1.5. Slumps shall be kept within the following limits unless otherwise permitted:

Footings and mass concrete	1 inch - 3 inch
Columns and pedestals	2 inch - 4 inch
Decks and sidewalks	2 inch - 3 inch
Tremie concrete	6 inch - 8 inch
Walls over 18 inch thick	2 inch - 3 inch
Walls 18 inches thick and under	2 inch - 4 inch
Pumped concrete (at mixer)	4 inch maximum
Concrete with high range water reducer	5 inch - 7 inch

3.1.4 Air-Entrainment.

3.1.4.1 Air-entrainment of the required percentage shall be obtained by the use of air-entraining admixture unless otherwise permitted. Air content will be determined in accordance with AASHTO 152 except as modified in 3.1.5.1.

3.1.4.2 The percentage of air-entrainment for pumped concrete shall be taken at the discharge end of the pump line.

3.1.5 Testing.

3.1.6.1 When ordered, test cylinders shall be made in accordance with AASHTO T 141 except that the entire sample for test cylinders and testing air-entrainment and slump may be taken at one time from the middle of the batch. Errors in proportioning or mixing as evidenced by excessive slump will be cause for rejection. Cylinders shall be made and cured in accordance with AASHTO T 23. To determine compliance with Table 520-1 cylinders shall be tested in accordance with AASHTO T 22 and the test strength shall be the average compressive strength of at least two cylinders tested at the end of the 28 day curing period.

3.2 Forms and Falsework.

3.2.1 Drawings and data for forms and falsework shall be submitted in accordance with 105.02.A concrete weight of 150 pounds per cubic foot and a live load of 50 pounds per square foot shall be used in calculations. Adequate provisions shall be made for the effect of vibration and impact on the forms and falsework.

3.2.2 Wood forms and bracing materials shall be of approved lumber, mortar tight, and free of imperfections on exposed surfaces. Forms shall have sufficient studs, wales, and stiffbacks to eliminate bulging and shrinking. Surfaces which will be exposed to view in the final structure shall be formed with plywood unless otherwise specified or permitted. Plywood which will not give a concrete finish essentially equal to new plywood shall not be used. All plywood shall be placed with the grain horizontal.

3.2.3 Forms shall be installed to the lines and grades shown on the plans or ordered. Forms for grade lines exposed to view such as top of curbs, walls, bearing areas, and the like, shall be cut to grade unless otherwise permitted. Wood in contact with the concrete shall be treated with an approved form release compound prior to erection. Cleaning and inspection ports shall be provided as ordered.

3.2.4 Ties and anchorages for use in forms above the top of footings shall be fabricated so as to be removed to a minimum depth of 2 inches without injury to the concrete.

3.2.5 Chamfer strips shall be installed as shown on the plans or ordered. Joints which are to receive external waterproofing shall not be chamfered.

3.2.6 Metal forms shall comply with the pertinent requirements of 3.2.2. Projections into the finished concrete surface will not be permitted. Connection devices shall hold the forms rigidly in alignment and shall be removed without injury to the concrete.

3.2.6.1 Forms made of other materials such as fiberglass or plastic may be used when permitted.

3.2.7 Falsework shall be placed on an approved solid footing or piling. Provisions shall be made for adjusting forms to grade and compensating for settlement during placement of concrete. Improper or inadequate bracing shall be satisfactorily corrected.

3.2.8 Stay in place deck forms shall not be allowed unless specifically allowed on the plans.

3.3 Weepers and Drains.

3.3.1 Four-inch weepers at approximately 10 feet on centers shall be placed at the elevations shown or ordered unless otherwise directed. Coarse gravel or stone shall be placed at the inlets and outlets to permit unobstructed flow of the weepers. An approved geotextile patch may be substituted on the inlet end of weepers in place of the coarse gravel or stone.

3.4 Ready-Mixed Concrete.

3.4.1 General.

3.4.1.1 Ready-mixed concrete is defined as portland cement concrete manufactured for delivery in a plastic state. It shall be in compliance with AASHTO M 157 or as modified herein.

3.4.1.2 Ready-mixed concrete shall be mixed and delivered to the point designated by means of one of the following combinations of operations:

(a) Central-mixed concrete. Mixed completely in a stationary mixer and delivered in a truck mixer operating at agitation speed.

(b) Shrink-mixed concrete. Mixed partially in a stationary mixer and the mixing completed in a truck mixer.

(c) Transit-mixed concrete. Mixed completely in a truck mixer.

3.4.1.3 Non-agitating equipment will not be permitted for transportation.

3.4.2 Mixers.

3.4.2.1 Each mixer shall have metal plate or plates attached in a prominent place by the manufacturer, plainly marked with the gross volume of the drum, the capacity of the drum or container in terms of the volume of mixed concrete, and the mixing and agitating speeds. The volume of mixed concrete shall not exceed 63 percent of the total volume of the drum or container when the concrete is in transit or shrink-mixed, or 80 percent of the total volume when the concrete is central-mixed. Stationary mixers shall be equipped with an acceptable timing

device that will not permit the batch to be discharged until the specified mixing time has elapsed.

3.4.2.2 When loaded to capacity, all mixers shall be capable of combining the ingredients of the concrete into a thoroughly mixed and uniform mass, and of discharging the concrete with a satisfactory degree of uniformity at a rate which will not inhibit the rate of placement required. The rate of discharge shall be governed by the speed of rotation and not by restrictions of the discharge opening.

3.4.2.3 Mixers will be subject to inspection as frequently as considered necessary. If found unfit to function properly, the mixers will be disapproved for use until correct operating conditions have been restored. The pickup and throw-over blades shall be replaced or repaired when they have become worn 1 inch or more below the original height of the manufacturer's design, or have become loose, broken, bent, scalloped, or otherwise damaged. Any accumulation of hardened concrete shall be removed.

3.4.2.4 The Engineer may make tests for consistency of individual samples at approximately the beginning, the midpoint, and the end of the load. If the concrete is not of uniform quality, the mixer shall not be used until the condition is corrected and the mixer has been re-inspected and approved.

3.4.3 Mixing.

3.4.3.1 Mixers shall be operated with the limits of their capacity as specified in 3.4.2.1 or as designated by the manufacturer of the equipment, whichever is less, and shall not exceed the speed of rotation designated by the manufacturers.

3.4.3.1.1 When high range water reducing admixture is used, the mix shall be delivered with 2 cubic yards less than the manufacturer’s rated capacity for mixing as specified in 3.4.2.1.

3.4.3.2 When shrink-mixed or central-mixed concrete is used, mixing time shall be measured from the time all the solid material is in the drum. The batch shall be so charged that some water will enter in advance of the cement and aggregates and all water will be in the drum by the end of the first one fourth of the specified mixing time.

3.4.3.3 Where mixer performance tests have not been made, the minimum mixing time for mixers having capacities less than 1 cubic yard shall be 1 minute. For mixers of greater capacity, the minimum mixing time shall be increased by 15 seconds for each cubic yard of additional capacity or fraction thereof.

3.4.3.4 When shrink-mixed concrete is used, the mixing time in the stationary mixer shall be at least that required to intermingle the ingredients. After transfer to a truck mixer, mixing at mixing speed and turning at agitating speed will be required as specified in 3.4.3.5.

3.4.3.5 When transit-mixed concrete is used, mixing shall be performed at the site of the work unless otherwise permitted. If the required uniformity is not obtained within 100 revolutions of

the mixer after all ingredients are in the drum, that mixer shall not be used until the condition is corrected. Additional revolutions of the mixer beyond the number found to produce the required uniformity shall be at agitating speed except as stated in 3.4.3.7.

3.4.3.6 Each batch of concrete delivered to the placement area shall be accompanied by a time slip issued at the batching plant bearing the time of charging of the mixer drum with cement and aggregates.

3.4.3.7 Water shall not be added after the initial introduction of the mixing water to the batch except when the slump is unsatisfactory. Such additional water as necessary, up to the amount permitted in Table 520-1, may be added to bring the slump within the limits specified in 3.1.3. The drum shall then be turned an additional 30 revolutions at mixing speed. Water shall not be added at any later time unless permitted.

3.4.3.8 Mixing shall begin within the 30 minute period after the cement has been added to the aggregates unless otherwise permitted.

3.4.3.9 When pumps are used, truck mixers shall be scheduled and adjusted to the capabilities of the pumping units and the rate of placement to provide continuous pumping without excessive waiting time before discharge. Whenever possible, pumps shall be placed so that 2 trucks may discharge into the hopper at the same time. Actual discharge shall be such that the last of the load of one is discharged into the hopper with the beginning or middle portion of the other.

3.4.3.10 Additional high range water reducing admixture, not to exceed the manufacturer’s recommendation, may be required to be added at the project to reach slump requirements.

3.5 Placing Concrete.

3.5.1 General.

3.5.1.1 The Contractor shall notify the Engineer at least three working days in advance of each concrete placement to allow for sufficient time to schedule required inspection and testing. A pre-pour conference shall be mandatory prior to any deck placement.

3.5.1.2 Concrete shall not be placed without inspection. Concrete so placed will be removed at the Contractor's expense unless authorized by the Engineer.

3.5.1.3 Approval will be required for alignment and grade, formwork and bracing, reinforcing steel and other inclusions, and the cleanliness of the forms prior to placing concrete.

3.5.1.4 If the Contractor proposes to place concrete by pumping, a detailed plan outlining his proposed method of operation shall be furnished along with a list of the pumping units proposed, the manufacturer’s specifications and capabilities of the units, slickline diameter and maximum length of same, diameter and length of any flexible lines proposed, and the allowable continuous pumping pressure of each unit. This information shall be furnished seven days in

advance of the scheduled operation to permit study of the equipment and methods proposed and the satisfactory resolution of any questions arising.

3.5.2 Equipment.

3.5.2.1 All equipment used in placing concrete shall be approved for the particular use intended. Equipment which will be in contact with the fresh concrete shall be mortar- tight and free of caked-on mortar and other contaminants. If other methods are not satisfactory, sandblasting will be required for cleaning.

3.5.2.2 Crane buckets for placing concrete shall be low-slump type unless otherwise permitted. Hooks for handling buckets shall be equipped with a safety device to prevent accidental disengagement.

3.5.2.3 Chutes, when permitted, shall be of approved materials and installed so as to prevent segregation. Any sign of segregation will result in rejection of chuting and utilization of an alternate approved method of placement.

3.5.2.4 Aluminum shall not be used in any equipment where it would be in contact with the fresh concrete.

3.5.2.5 When pumping concrete, the number and lengths of flexible lines shall be kept to the minimum required for distribution. Transition sections used to reduce the diameter of lines shall be of slickline material and shall be as long as possible.

3.5.3 Placing.

3.5.3.1 Concrete shall be placed in its final location as soon as possible after mixing. Any concrete that is not in place 1-1/2 hours after the cement has been added to the aggregate shall not be used unless otherwise permitted. Segregation of the mix or displacement of materials inside the forms will not be permitted.

3.5.3.2 Concrete shall be placed in layers not to exceed 12 inches and placing intervals shall not exceed 30 minutes unless otherwise permitted. Concrete which has attained a partial set shall not be used.

3.5.3.3 In the event of unscheduled stoppage of the work, vertical bulkheads shall be installed to insure a minimum depth of 6 inches of concrete in the next lift of concrete when placement is resumed. See 3.6.2 also.

3.5.3.4 Care shall be taken to keep the concrete pressure on ties and forms within the design limits. Concrete shall not be dropped a distance of more than 5 feet unless contained within a tremie, elephant trunk, or other approved system.

3.5.3.5 Concrete which has attained its initial set shall not be disturbed by personnel, equipment, or other construction operations for a minimum period of 72 hours unless otherwise permitted.

3.5.3.6 Defective sections of concrete shall be removed and replaced or repaired as directed.

3.5.4 Consolidation.

3.5.4.1 Unless otherwise permitted, consolidation of all concrete shall be achieved by the use of approved internal vibrators with a frequency range of 7,000 to 10,000 impulses per minute. Vibrators used in concrete containing epoxy coated reinforcing steel shall be equipped with a non-metallic-coated head. Concrete shall not be moved excessive distances by the use of vibrators.

3.5.4.2 Vibrators shall be inserted vertically into the fresh concrete and withdrawn slowly. Vibration shall continue until consolidation is achieved and stopped before segregation occurs or water is forced to exterior concrete surfaces in appreciable amounts.

3.5.4.3 Concrete shall not be placed at a rate greater than that which can be thoroughly consolidated by the vibrators in use. The number of vibrators required will be based on the maximum predicated rate of placement. At least one reserve vibrator shall be furnished.

3.5.5 Depositing Concrete Under Water

3.5.5.1 Retarding admixture shall be used conforming to 2.3. Unless otherwise specifically permitted, all concrete placed in water shall be placed by tremie. Slump shall comply with 3.1.4.

3.5.5.1.1 Pumping for underwater placement of concrete shall also be into a tremie unless specific permission is given for direct placement by pump lines. Placement by direct pumping, if permitted, will require the hose to be securely fastened to the cofferdam frame at all times to eliminate surging of the hose in the concrete. If at any time the procedure becomes unacceptable, the remainder of the concrete shall be placed by a tremie. Tremie equipment shall be available on site prior to the start of pumping operations.

3.5.5.2 A tremie shall consist of a watertight tube attached to a hopper of approved size with an adequate working space provided around the hopper. The tremie shall be attached to a crane or other approved hoisting equipment to permit lifting and lowering the tremie with sufficient rapidity to control and stop the flow of concrete as required. The equipment shall be capable of moving the tremie over the entire surface of the placement area.

3.5.5.3 At the start of placing operations, and at any time thereafter that the tremie is withdrawn from the concrete, and approved watertight plug shall be inserted into the discharge end of the tremie. The tremie shall be lowered until it rests on the bottom or in freshly deposited concrete. It shall then be checked for leaks. If watertight, the tremie tube and hopper shall immediately be filled with concrete. The hoisting mechanism shall then raise up the tremie to permit the discharge of the concrete without removal from freshly deposited concrete. The

tremie shall then be lowered to stop the flow of concrete before it has dropped below the level of the bottom of the hopper. The hopper shall again be filled and the process repeated until the desired intermediate or final grade is attained. Top concrete surfaces shall be approximately horizontal.

3.5.5.4 Concrete foundation seals shall be placed as shown on the plans or ordered. The elevation of the top of the seal and the required depth may need to be determined after the excavation is completed.

3.5.5.5 Test cores of approximately 2 inch diameter shall be taken through all concrete deposited underwater on rock. The cores shall penetrate a minimum of 1 foot into the rock. One core shall be taken near each corner and one shall be taken near the center. Should evidence of voids, seams or unsatisfactory concrete be discovered, additional cores shall be taken as ordered. Unsatisfactory material shall be removed and replaced or repaired as directed.

3.5.6 Substructure

3.5.6.1 All substructure concrete shall be placed in the dry unless otherwise permitted. Footings shall be placed at the elevations shown on the plans or ordered.

3.5.7 Superstructure

3.5.7.1 Compliance with superstructure concrete placing sequences shown on the plans will be mandatory unless prior approval is secured for an alternate sequence. If a pouring sequence is not shown, the Contractor shall submit his proposed pouring sequence for approval. Sufficient concrete placing units shall be furnished to maintain plasticity requirements.

3.5.7.1.1 When pumping concrete for decks, a sufficient number of pumps including standby units shall be available on site to insure uninterrupted concrete delivery to the placement area.

3.5.7.2 Concrete operations on steel structures shall not start until all temporary falsework and bracing have been removed unless otherwise permitted.

3.5.8 Box Culverts

3.5.8.1 Construction joints shown on the plans or permitted shall be perpendicular to the base slab and normal to the culvert axis. Weepers and drains shall comply with 3.3.

3.6 Joints.

3.6.1 General.

3.6.1.1 All joints not exposed to view in the final structure shall be waterproofed in accordance with 538.

3.6.2 Construction and Contraction Joints.

3.6.2.1 Joints shown on the plans or permitted shall be keyed, doweled, or both as shown or directed. Sizes and spacing shall be as shown or ordered. Horizontal joints will not be permitted unless shown on the plans or occasioned by breakdown of plant or equipment in which case, in addition to 3.5.3.3, planed lumber shall be inserted into the fresh concrete to produce a horizontal line in surfaces which will be exposed to view.

3.6.2.2 When fresh concrete is to be bonded to previously placed concrete, the abutting surface shall be abraded by sandblasting and cleaned by compressed air prior to coating with bonding agent.

3.6.2.3 Where bonding is not desired, the existing concrete shall be coated with an approved form release compound before the adjacent concrete is placed.

3.6.3 Expansion Joints.

3.6.3.1 Expansion joints shall be constructed at the locations shown and in conformity with the details shown on the plans or ordered.

3.6.3.2 Open joint shall be formed at the locations shown on the plans. Inserts shall be fabricated so as to permit removal without damage to the work.

3.7 Concreting in Cold Weather.

3.7.1 General.

3.7.1.1 When the average daily temperature falls below 35 degrees F for more than 1 day, protective measures shall be taken to prevent damage to the concrete from freezing. The Contractor shall submit his proposed protective methods for approval. Concrete shall be protected from freezing for a minimum of 5 days.

3.7.2 Insulation.

3.7.2.1 Insulation shall be an approved blanket, batt of board insulation with a thermal conductivity of less than 0.25 BTU per hour per square foot for a thermal gradient of 1 degree F per inch.

3.7.2.2 Concrete delivery temperature shall be 50 degrees F to 70 degrees F for sections 24 inches or less in thickness and 40 degrees F to 55 degrees F for sections thicker than 24 inches unless otherwise permitted.

3.7.2.3 Insulation shall be applied to the forms in an approved manner similar to those shown in Figure 1 and Figure 2 and with the thickness requirements stipulated in Table 520-6. Insulation with breaks or tears shall be rejected unless satisfactorily repaired. Openings for thermometers shall be provided where ordered. See Figure 3 for typical locations.

3.7.3 Housing and Heating

3.7.3.1 Housing for cold weather concreting shall consist of a framework covered with weathertight plastic or canvas and shall be large enough to completely enclose the work to be heated and to accommodate the heating required elements.

3.7.3.2 Heaters shall be of approved type and shall be furnished in sufficient quantity to maintain the required temperature without creating hot spots in the concrete.

3.7.4 Concrete

3.7.4.1 Concrete shall be brought to the required temperature by the use of heated mixing water or heated aggregates or both. The maximum allowable temperature of water shall be 160 degrees F and the maximum allowable temperature for aggregates shall be 100 degrees F. The heated water shall be added to the aggregates prior to the addition of the cement.

3.7.4.2 If the air temperature and transporting distance prevent the delivery of the concrete at the required temperature without exceeding the maximum allowable temperature in 3.7.4.1, the placement shall be cancelled until such time as the requirements can be met.

3.7.4.3 Forms, reinforcing steel, existing concrete and all other materials which will be in contact with the fresh concrete shall be brought to a temperature of 50 degrees F and all frost shall be removed within the limits of the foundation prior to the placing of the concrete.

3.7.4.4 Concrete shall be placed in the forms as soon as possible after delivery and as rapidly as possible without exceeding form and tie capacities. Tarpaulins or other approved materials shall be used to cover the top openings in forms to prevent heat loss. Only that portion of the form required for placement shall be opened and the opening re- covered between trucks unless otherwise permitted.

3.7.4.5 Finishing shall be completed as rapidly as possible. On areas where item 534.3 is not used, liquid curing compound shall be applied to exposed surfaces immediately after finishing. After the concrete has set, plastic shall be placed over the exposed areas. When insulation is used, a covering of approved insulation or a layer of hay and a tarpaulin shall be placed over the plastic and secured in place.

3.7.4.6 The concrete temperature shall be maintained between 50 degrees F and 100 degrees F for the first 72 hours and between 40 degrees F and 100 degrees for the next 48 hours. The concrete shall then be permitted to cool at a rate not to exceed 1 degree F per hour until it reaches the atmospheric temperature.

3.7.4.7 During cold weather, cofferdams shall remain dewatered and the concrete kept from freezing for 24 hours following placing. After 24 hours, the contractor may allow the cofferdam to flood.

3.7.4.8 Concrete with high range water reducing admixture shall be placed when the air temperature is 50 degrees F and rising. It may be placed when hot water is used and the concrete temperature is maintained in accordance with 3.7.4.6.

Table 520-6 – Insulation Requirements for Concrete Walls, Piers, Abutments, and Floor Slabs Above Ground

	Wall Thickness	Minimum Air Temperature Allowable	
Concrete Class	Feet	For 1” Insulation* (Degrees F)	For 2” Insulation (Degrees F)
B	0.5		14
	1.0		-26
	1.5		-65
	2.0	-10	
	3.0	-20	
	4.0	-23	
	5.0	-25	
A	0.5		6
	1.0		-41
	1.5		-89
	2.0	-22	
	3.0	-34	
	4.0	-38	
	5.0	-40	
AA	0.5		0
	1.0		-56
	2.0	-33	
	3.0	-48	

3.8 Concreting in Hot Weather.

3.8.1 General.

3.8.1.1 The Contractor shall maintain the plastic concrete below 85 degrees F. This may require the addition of ice to the mixing water, sprinkling the forms and reinforcing steel, scheduling the concrete placements for early morning or evening hours, or any other approved methods.

3.8.1.2 After placement, the concrete shall be maintained below 100 F by sunshades, windscreen, fog spray, wet burlap, or other approved methods.

3.8.1.3 If excess water demand or too rapid setting is anticipated, a water-reducing or retarding admixture may be added to the mix in the amounts ordered.

3.8.1.4 When daytime air temperatures exceed 85 degrees F, concrete temperature exceeds 80 degrees F, and in the opinion of the Engineer, satisfactory surface finish cannot be achieved, nighttime or early morning placement may be required. No additional compensation will be allowed for this work.

3.9 Finishing Plastic Concrete.

3.9.1 Surfaces Other Than Decks.

3.9.1.1 All upper horizontal surfaces such as the top of wings, bearing pedestals. and the like shall be finished by placing an excess of material in the forms and screeding off the excess after compaction. The surface shall then be finished by the use of wood, magnesium. cork, canvas, or steel floats as directed.

3.9.1.2 Catwalks shall receive a magnesium float finish.

3.9.1.3 Sidewalks shall receive a broom finish by lightly dragging a broom transversely across the finished concrete to roughen the surface unless otherwise directed. Surfaces beneath bridge rail posts, light pole bases, and the like shall not be broomed.

3.9.1.4 All finishing shall be performed by persons experienced in the use of finishing equipment.

3.9.2 Concrete Decks.

3.9.2.1 All concrete decks shall be finished by the use of approved, self-propelled finishing machines, capable of adjustment for crown and width, and capable of raising the screeds to clear the concrete when required unless specific written permission is given for an alternate method.

3.9.2.2 Screed rails shall be set and checked for the finishing machine to ride on. The rails shall have sufficient rigidity and support to prevent deflection. After the rails are set, the finishing machine shall be placed on the rails and operated over the entire deck as many times as necessary to assure the required depth of concrete and the proper clearances to the reinforcing steel prior to starting the placement.

3.9.2.3 The finishing machine shall follow closely behind the placing and consolidating operation and the placing and finishing operations shall be continuous. See 3.5.3.2.1.

3.9.2.4 All work behind the finishing machine shall be performed from work-bridges. Work-bridges shall have independent movement capability and shall not be attached to the finishing machine. Walking in the concrete behind the finishing machine will not be permitted.

3.9.2.5 As soon as the bleeding has stopped or the sheen has started to disappear, the concrete shall be given a final surface finish by scraping or dragging with an approved float at least 3 ft in length. The float shall be placed on the outer edge of the finished concrete and moved

transversely the full width of the deck. The finished edge shall be parallel to centerline. Each subsequent pass shall lap the preceding pass by at least 1/2 the length of the float.

3.9.2.6 Thc finished concrete shall have the required crown and grade and the surface shall not vary from either by more than 1/8 inch in 10 ft. Sharp projections shall not be left which might damage the waterproofing materials.

3.10 Curing Concrete.

3.10.1 All exposed surfaces of concrete shall be cured in accordance with the requirements of Table 520-7. All water used to wet cure concrete shall conform to 2.5.

TABLE 520-7-CONCRETE CURING

Type of Construction	Curing Method	Curing Period (Days)	Minimum Number of Days Before Membrane Application	
			Horizontal	Vertical
Bridge Decks w/o HRWR	c	7	14	14
Concrete w/ HRWR	c	3	5	5
Concrete w/ Fly-Ash	a,b	7*	14	7
Concrete treated w/ 534 or 537	a	7		
All other concrete	a,b	7	14	7

*May be extended if design strength is not achieved, see 3.10.2.

Cure Method "a" - Concrete shall be kept moist until it can support curing covers at which time it shall be completely covered with a vapor-proof barrier conforming to 2.6.2. Water shall be reapplied as necessary to keep the surface of the concrete wet for the entire 7day cure period.

Cure Method “b”- Immediately after finishing, all exposed surfaces shall be treated with a liquid curing compound conforming to 2.6.3 at the rate of 1 gallon per 200 square feet or by fog spray sprinkling or ponding of water conforming to 2.5 or any combination of the above, when the weather permits.

Cure Method “c” - The surface shall receive a wet burlap cure for at least 72 hours. Failure to apply wet burlap conforming to 2.6.1 within 30 minutes after the concrete has been deposited shall be cause for rejecting the work. During the first 24 hours, the burlap shall be kept continuously wet by means of an approved automatic sprinkling system. After 24 hours, the Contractor may cover the wet burlap with a 4 mil minimum polyethylene film for an additional 48 hours in lieu of using a sprinkling or wetting system although wetting under the polyethylene may be

required. For concrete bridge decks without HRWR the cure shall continue for an additional 4 days.

3.10.2 Fly-Ash Concrete

3.10.2.1 When curing concrete with fly-ash, the 7 day curing period specified in 3.10.1 shall be extended, if necessary, to assure the concrete attains the design strength.

3.10.2.2 The concrete cylinders for mixes containing fly-ash shall be made and sealed by covering with water tight caps, and remain on site under environmental conditions similar to that of the structure until 24 hours prior to testing. The curing shall be in accordance with the procedure as specified in AASHTO T 23, Section 9.4, except that the cylinders shall only be stripped prior to testing.

3.10.2.3 Precautions shall be taken to assure that the concrete cylinders are not subjected to a more severe environmental condition than the structure.

3.10.2.4 All cylinders shall be laboratory tested immediately after stripping. Laboratory moist curing is not permitted.

3.11 Loading Concrete.

3.11.1 Removing Forms.

3.11.1.1 Unless otherwise permitted, load bearing forms may not be removed until concrete test cylinders have attained 80 percent of their minimum expected compressive strength. If not controlled by such tests, the following periods may be used as a guide: For deck slabs, centering, and falsework, 14 days; for all other parts, 3 days or as directed.

3.11.1.2 The provisions of 3.10 shall apply if forms are removed prior to completion of the curing period.

3.11.2 Loading Restrictions.

3.11.2.1 Nothing shall be placed on the concrete prior to the minimum time periods specified in Table 520-8.

TABLE 520-8 CONCRETE LOADING

Type of Construction	Minimum Time to Loading after Placement of Concrete
Substructure concrete including footings	80% of design strength or 7 days
Box culvert base slabs	5 days
Superstructure concrete	- 3 days and 1800 psi for curb placement - 80% of design strength for light vehicular loads when permitted - 14 days and 3200 psi respectively for membrane and paving placement; and - 28 days and 4000 psi for legal traffic loads

3.12 Finishing

3.12.1 General

3.12.1.1 Surface finishes shall be classified as follows:

Class 1, Ordinary Finish

Class 2, Rubbed Finish

3.12.1.2 Class 1, Ordinary Finish. Fins and projections shall be removed from all surfaces except those which will not be exposed. On all exposed surfaces the cavities produced from ties, honeycomb spots, broken corners or edges, and all other holes and defects shall be thoroughly cleaned and saturated with water for not less than 3 hours. These areas shall then be carefully pointed and trued with mortar composed of the same brand of cement and fine aggregate mixed in proportions of the concrete being finished. Mortar used in pointing shall not be more than 1 hour old. The mortar patches shall be cured as specified in 3.10. All expansion joints in the completed work shall be carefully tooled and free of mortar. The joint fillers shall be left exposed for their full length with clean, true edges.

3.12.1.3 Class 2, Rubbed Finish. After removal of forms, holes and imperfections shall be filled with mortar conforming to 3.12.1.2. After the mortar has thoroughly set, the concrete shall be saturated with water for at least 3 hours. The surfaces shall then be rubbed with a medium coarse Carborundum stone and a small amount of mortar until all voids have been filled and all marks and projections have been removed and the surface is uniform. This surface shall be left until all concrete to be rubbed above it has been similarly treated.

3.12.1.3.1 A Class 2, rubbed finish, shall be given to all copings and also to any other concrete that contains imperfections and which will be exposed to view unless otherwise permitted. All other surfaces shall receive a Class 1, ordinary finish.

3.12.1.4 Holes which will not be exposed to view may be filled with asphalt cement when permitted.

3.12.1.5 After all concrete surfaces have received their initial rubbing, the next procedure shall consist of rubbing the concrete with a fine Carborundum stone and water until a smooth uniform texture is obtained.

3.12.1.6 The final procedure shall consist of rubbing the concrete with dry burlap to remove loose powder. Should the final surface be unsatisfactory, a repetition of the above procedures will be required.

Methods of Measurement

4.1 Concrete "Class B and T" will be measured by the cubic yard unless otherwise indicated, and in accordance with the following:

4.1.1 Except as specified below, the volume will be computed to the nearest 0.1 of a cubic yard by the prismoidal method using the dimensions as shown on the plans or as ordered. No allowance or measurements will be made for materials not entering permanently into the work or those used without proper authorization. No deductions will be made for the volume of concrete displaced by steel reinforcement, structural steel, expansion joint materials, scuppers, weepers, conduits, or the tops of piles.

4.1.1.1 Concrete Class T will be measured to the neat lines as shown on the plans. Seals on ledge will be measured to the ledge limit ordered to be removed.

4.1.1.2 When the Engineer determines that it is impracticable to measure the volume by dimensions, the volume will be based on the actual yield as determined in the field in accordance with AASHTO T 121.

4.2 Concrete above footings (Class A) and concrete bridge decks (Class AA) will be measured as units.

4.2.1 If changes in the work which change the volume of concrete to be furnished are ordered by the Engineer, the unit will be adjusted as follows:

4.2.1.1 A factor developed by dividing the number of cubic yards ordered by the estimated quantity shown on the plans shall be applied to the unit.

4.3 When more than one unit is specified in the contract, separate item numbers will appear for each separate and complete unit.

Basis of Payment

5.1 The accepted quantities of concrete "Class B and T" will be paid for at the contract price complete in place.

5.2 Concrete above footings (Class A) and concrete bridge deck (Class AA) will be paid for at the contract lump sum complete in place.

5.3 Foundation Seal.

5.3.1 Seals shown on the plans will be paid for at the contract unit price per cubic yard for 520.6.

5.3.2 Seals ordered, but not shown on the plans, will be paid for at the contract unit price per cubic yard for Class T concrete if Class T is included in the proposal.

5.3.3 Seals requested by the Contractor and permitted, but not deemed necessary, will not be paid for.

5.4 Waterproofing of construction joints shown on the plans or ordered will be paid for as noted.

5.5 Reinforcing steel will be paid for under 544.

5.6 Weepers and concrete admixtures will be subsidiary.

Pay items and units:

520.	Concrete Class ___	Cubic Yard
520.12	Concrete Class, Above Footing	Unit
520.6	Concrete Class T, Foundation Seal	Cubic yard
520.7	Concrete Bridge Deck	Unit

SECTION 534 -- WATER REPELLENT

Description

1.1 A water repellent of the type specified shall be applied to the concrete surface shown on the plan or as ordered.

Materials

2.1 Boiled linseed oil mixture shall conform to AASHTO M 233 and shall be composed of 50 percent double boiled linseed oil and 50 percent petroleum spirits, by volume.

2.2 Silane and siloxane shall be tested in accordance with National Cooperative Highway Research Program Report 244, "Concrete Sealer for Protection of Bridge Structures" and shall meet the following criteria:

2.2.1 A reduction in chloride retention content in concrete shall be a minimum of 87 percent when applying silane at a rate 100 square feet per gallon or siloxane at a rate of 125 square feet per gallon.

2.2.2 During the soaking period test, a weight gain of not more than 0.82 percent shall occur after 21 days.

Construction Requirements

3.1 General. All caulking, patch, and joint sealers shall be installed prior to application of the water repellent. Concrete surfaces shall have cured a minimum of 14 days and shall be dry prior to the application of water repellent. Resin or wax base curing compound shall not be used on new concrete where sealers are to be applied.

3.2 Surface preparation shall be by a sand or water blasting of the surface to remove dust, dirt, oil, wax, other coating efflorescence and other foreign materials.

3.3 Linseed oil. Water repellent with linseed oil may be applied on horizontal surfaces by any approved means. If a sprayer is used, the nozzle shall be held within 18 inches of the concrete or as directed. On vertical surfaces the mixture may be applied by spraying, brushing, or rolling and applications shall be started at the base and coated upward to the top.

3.3.1 Two coats of linseed oil mixture shall be applied. The first shall be at a rate sufficient to obtain maximum penetration, taking care to prevent the material from discoloring curbs or other parts of the work. The second coat shall be applied as a seal coat, with attention given to the lighter appearing areas. The rate of application shall be approximately 0.025 gallons per square yard for the first coat and 0.015 gallons per square yard for the second coat, or an

average of approximately 25 square yards per gallon. The second application shall not be made until the concrete has regained its dry appearance and in any event not until at least 24 hours passed.

3.3.2 The linseed oil -- petroleum spirits mixture is flammable and all due precautions shall be observed.

3.4 Silane-Siloxane. Water repellent (silane-siloxane) shall be applied at the rate recommended by the manufacturer.

3.4.1 A test application shall be performed on the surface to be treated, to insure compatibility, using the same equipment to be used on the project. After a minimum of three days, the Engineer shall test for waterproof effectiveness by applying water to the surface. If the water beads up and is not readily absorbed, the test is positive.

3.4.2 Vertical surfaces shall have water repellent (silane-siloxane) applied in two applications, wet on wet, beginning at the bottom. After allowing the first application to penetrate the concrete surface approximately three to five minutes, apply second coat in the same manner. Less material will be required to saturate the surface on the second application. The combined application shall not exceed the rate specified above.

3.4.3 Water repellent (silane-siloxane) shall be applied only when the substrate surface temperature is 45 F and rising. Sealer shall be maintained between 65 F and 85 F during application. Do not apply when substrate surface temperature exceeds 85 F.

3.4.4 The Contractor shall follow the manufacturer's instructions in the method of preparation of the concrete and application of the sealer.

Method of Measurement

4.1 Water repellent with linseed oil will be measured by the gallon in accordance with 3.3.1.

4.2 Water repellent (silane-siloxane) will be measured by the gallon in accordance with 3.4.

Basis of Payment

5.1 The accepted quantity of water repellent will be paid at the contract unit price per gallon, complete in place.

Pay Items and units:

534.1	Water Repellent with Linseed Oil	Gallon
534.3	Water Repellent (Silane-Siloxane)	Gallon

SECTION 544 - REINFORCING STEEL

Description

1.1 This work shall consist of furnishing and placing reinforcing steel as shown on the plans or ordered.

Materials

2.1 Bar reinforcement shall be Grade 60 or as shown on the plans.

2.1.1 Billet-steel bars shall conform to AASHTO M 31.

2.1.2 Rail-steel bars shall conform to AASHTO M 42.

2.2 Welded steel wire fabric shall conform to AASHTO M 55.

2.3 Bundled reinforcement shall be used only as shown on the plans or with written permission.

2.4 Foreign steel. The use of foreign steel will be permitted only after approval by the Engineer upon suitable certification from a recognized domestic laboratory.

2.5 Epoxy Coated Reinforcing Steel.

2.5.1 Epoxy coated reinforcing steel shall meet the requirements of AASHTO M 284.

2.5.2 A written certification by the manufacturer of the powdered epoxy resin attesting to the AASHTO M 284 requirements shall be furnished for each lot to the Engineer by the Contractor.

2.5.2.1 The certificate shall also contain the insignia or other similar statement that the plant is a currently approved fusion-bonded epoxy coating applicator, as defined by the Concrete Reinforcing Steel Institute (CRSI) Plant certification Program.

2.5.3 The epoxy coating applied to the bars shall be uniform and smooth and shall provide a film thickness of 10 mils +/- 2 mils after curing.

2.5.4 All chair and bar supports used for the installation of the epoxy coated reinforcing bars shall be either (1) coated with the powder resin, (2) coated with an acceptable plastic material, or (3) coated with a material approved in writing by the Engineer.

Construction Requirements

3.1 Bar List. The Highway Department's bar list and bending schedule is made for the purpose of arriving at an estimate of quantities. The Contractor shall verify the quantity, size, and shape of the bar reinforcement against the structure drawings and make the necessary corrections, if any, before ordering. Errors in the bar list and bending schedule shall not be cause for adjustment of contract unit price.

3.2 Surface condition of reinforcement. The reinforcing steel, at the time concrete is placed, shall be free of dirt, paint, oil, or other organic materials that may adversely affect or reduce bond. Metal reinforcement coated with firmly bonded rust, mill scale, or a combination of both shall be considered satisfactory provided the minimum dimensions and weight of a hand wire-brushed test specimen are not less than the applicable specification requirement. Rust or mill scale which is difficult to remove by vigorous scrubbing with a wire brush shall be considered firmly bonded to the steel.

3.3 Bending. Unless otherwise permitted, all reinforcing bars shall be bent cold. Bars partially embedded in concrete shall not be field bent except as shown on the plans or permitted. Only competent people shall be employed for cutting and bending, and proper appliances shall be provided for such work. Should the Engineer approve the application of heat for field bending reinforcing bars, precautions shall be taken to assure that the physical properties of the steel will not be materially altered.

3.4 Placing and fastening. Reinforcing steel shall be free from mortar and other objectionable substances, shall be accurately placed as shown or ordered, and shall be securely blocked and tied unless otherwise permitted. Blocking shall be by rust-resistant chairs unless otherwise permitted. Tack welding will be prohibited except upon special written approval of the Engineer. This provision also prohibits welding form ties to the reinforcement.

3.5 Splices. Reinforcing steel shall be furnished in the full lengths indicated on the plans unless otherwise permitted. Splices shall be made as shown on the plans or as permitted. No splices will be permitted at points where the section does not provide a minimum distance of 2 inches between the splices and the nearest adjacent bar or surface of the concrete. The bars shall be rigidly clamped or wired at all splices. Sheets of metal mesh shall overlap each other sufficiently to maintain uniform strength and shall be securely fastened at the ends and edges.

3.5.1 Splices made with mechanical connectors shall be as detailed on the plans or as permitted and shall develop at least 125% of the specified yield strength of the reinforcing bar being spliced. The minimum concrete cover over the reinforcing steel as shown on the plans shall be maintained
at the mechanical splice.

3.5.1.1 The Contractor shall submit two mechanical connectors connecting two (12 in) sections of reinforcing steel of each size per lot per project. Connector and reinforcing steel assemblies will be tested by the Department.

3.6 Handling, fabrication, and repair of epoxy coated reinforcing steel shall be in conformance with the applicable sections of AASHTO M 284/M 284M.

3.6.1 Amend section 12.2 of AASHTO M 284/M 284M to read as follows:

12.2 Damage caused to epoxy coated bars during the shipment and handling at the project site need not be repaired in cases where the damaged area is 1/8 by 1/8 in or smaller and the sum of all damaged areas in each 1 ft length of bar does not exceed 0.25 percent of the bar surface area in each 1 ft length of bar. All damaged areas larger than 1/8 by 1/8 in shall be repaired. The total bar surface area covered by patching material shall not exceed 5 percent.

3.6.2 If stored outdoors, the bars shall be covered for protection against the elements and in such a manner that condensation does not form on the bars. The bars shall not be exposed to sunlight for periods exceeding three months.

3.7 Epoxy coated reinforcing steel which requires cutting shall be sawn. No flame-cutting will be allowed. Cut ends of bars shall be recoated with epoxy as soon as possible and before visible oxidation occurs.

Method of Measurement

4.1 Reinforcing steel of the type specified will be measured by the pound by computing the theoretical weights of the reinforcing steel placed as shown on the plans or ordered, based on the following table:

Table 1 -- Reinforcing Steel Weights

Size Bar #	3	4	5	6	7	8	9	10	11	14	18
Lb. per Lin. Ft.	0.376	0.668	1.043	1.502	2.044	2.670	3.400	4.303	5.313	7.65	13.60

Basis of Payment

5.1 General. The accepted quantity of reinforcing steel of the type specified will be paid for at the contract unit price per pound complete in place. No allowance will be made for clips, wire, or other material used for fastening reinforcement in place and no allowance will be made for additional splices or permitted substitutions.

5.1.1 For mechanical splice bars no allowance will be made in excess of the length detailed on the plans for the additional weight required to manufacture and provide a mechanical splice to the plan specifications.

5.2 Structural steel. In reinforced concrete structures that have no structural steel bid items, structural steel will be paid for at the unit price per pound bid for reinforcing steel, unless otherwise indicated in the contract.

Pay items and units:

544	Reinforcing Steel	Pound
544.11	Reinforcing Steel-Mechanical Connectors	Pound
544.2	Reinforcing Steel-Epoxy Coated	Pound
544.21	Reinforcing Steel-Epoxy Coated Mechanical Connectors	Pound
544.3	Reinforcing Steel	Unit

SECTION 570 -- STONE MASONRY

Description

1.1 This work shall consist of furnishing all materials and constructing masonry of approved stones, laid with or without cement mortar, as shown on the plans or ordered.

Materials

2.1 Stone shall be furnished in accordance with Table 570-1.

Table 570-1 -- Stone for Stone Masonry

				Finish	
Stone	Source	Quality	Dress and Cut	Top and Bottom	Vertical Face Joints
Ashlar	approved quarry having the required quantity	compact, hard and practically non-absorbent; texture and color as indicated on plans or ordered	to exact dimensions	fine	fine
Squared	approved quarry having the required quantity	compact, hard and practically non-absorbent; texture and color as indicated on plans or ordered	roughly squared and to approximate dimensions	rough for at least 12 in. depth	rough for at least 9 in. depth
Rubble	field quarry, or rock excavation	approved, sound, clean, and free from structural defects	unsquared, roughly dressed	--	--

2.1.1 Ashlar and Squared Stone.

2.1.1.1 Stones shall have their edges pitched to a true

line with tops and bottoms parallel and cut to lie on their natural beds. The bottom beds shall be the full size of the stone and hollow beds or overhanging tops will not be permitted.

2.1.1.2 When specified as random or broken-ranged, stone shall have vertical joints unless otherwise indicated on the plans.

2.1.1.3 Size of stone shall be as indicated on the plans.

2.1.1.4 Surface finish shall be as shown on the plans in accordance with the following schedule:

(a) Smooth finished: surfaces in which the variations from the pitch line do not exceed 1/16 inch.
(b) Fine finished: surfaces in which the variations from the pitch line do not exceed 1/4 inch.
(c) Rough finished: surfaces in which the variations from the pitch line do not exceed 1/2 inch.
(d) Scabbled: surfaces in which the variations from the pitch line do not exceed 3/4 inch.
(e) Rock faced: surfaces on which there are no tool marks and which have irregular projection beyond the pitch line of not more than 1-1/4 inches.
(f) Weather-faced: surfaces which have been exposed to the weather for sufficient time to become weather beaten in appearance.
(g) Seam-faced: surfaces which are formed by seams in the natural ledge before stone is quarried.

2.1.1.5 All stone shall be so finished that no holes or portions of holes will show on surfaces which will be exposed in the finished work.

2.2 Cement mortar shall conform to 707.

2.3 Stone masonry anchors shall be of the shapes and dimensions shown on the plans. The minimum ultimate tensile strength shall be 42,000 psi. Anchors shall be zinc-coated (galvanized) in accordance with ASTM A 525, coating designation G 90.

Construction Requirements

3.1 Classification.

3.1.1 Stone masonry shall be classified by pattern: ranged, broken ranged, or random.

(a) Ranged masonry shall be laid up in regular courses of uniform height throughout their entire lengths. When the height of courses is varied, it shall be regularly diminished from bottom to top masonry.

(b) Broken-ranged masonry shall be laid up with courses not continuous throughout their entire lengths.

(c) Random masonry shall be laid up without courses.

3.1.2 Stone masonry shall be classified by type of stone and thickness of joints, in accordance with Table 570-2.

Table 570-2 - Stone Masonry Classification

Class of Masonry	Type of Stone	Joint Material	Max. thickness (inches)
Ashlar	Ashlar	Cement mortar	1/2
Mortar Squared Stone	Squared	Cement mortar	1
Dry Squared Stone	Squared	Dry (closely and lightly pinned)	--
Mortar Rubble	Rubble	Cement mortar	1-1/2
Dry Rubble	Rubble	Dry (closely and lightly pinned)	--
Copings	Squared (sawn Finish)	Cement mortar	1/2

3.2 Laying Stone.

3.2.1 All shaping and dressing of stone shall be done before it is placed.

3.2.2 When required, the contractor shall submit details of falsework or centering for approval.

3.2.3 No stone in broken-ranged or random work shall be laid in a structure until at least 50 percent of the amount required for the structure has been delivered at the site.

3.2.4 Stone shall be carefully set without jarring stone already laid and shall be handled with a lewis or other suitable device which will not mar the stone. Rolling or turning of stone on masonry already in place will not be permitted.

3.2.5 Stone to be laid in cement mortar shall be thoroughly cleaned before being set, and the bed to receive it shall be well cleaned. The thickness of all joints and beds shall be uniform throughout. Spalls shall not be used as pinners in mortar beds or joints. When any stone is disturbed or mortar joint broken, the stone shall be taken up, and after all mortar has been cleaned from the stone, bed, and joints, it shall be reset in fresh mortar.

3.2.6 All stones shall be well bedded with the face joints properly pointed before the mortar has set, unless otherwise permitted. When permitted, joints to be pointed after mortar has set shall be raked out to a depth of 2 inches before mortar has set and when pointed, shall be moistened and filled with mortar well driven in. All pointing, shall be finished with an approved pointing tool to form the type of joint indicated on the plans or ordered.

3.2.7 The masonry shall be kept wet during the pointing and in hot or dry weather shall be protected from the sun and kept wet for a period of 3 days after completion unless otherwise permitted or ordered. The exposed surfaces of the stones shall not be smeared with mortar. The joints shall be wiped free of loose mortar. Stone shall not be set when containing frost or during freezing weather unless permitted.

3.3 Bond

3.3.1 Stretchers shall have a depth of bed of not less than 1-1/2 times their height. They shall have a length not less than their height, nor less than 3 feet, nor more than 3-1/2 times their height, unless otherwise indicated on the plans.

3.3.2 Headers shall have a length of 1-1/2 times their height and shall extend entirely through masonry having a thickness of 4 feet or less. In masonry having a thickness greater than 4 feet, the depth of headers shall not be less than 2-1/2 times their height when the course is 18 inches or less in height, and not less than 4 feet in courses of greater height. Headers shall hold into the heart of the wall the same size shown on the face, bonding not less than 12 inches with the core or backing. Headers shall be placed over stretchers equally dividing the spaces between headers of adjoining courses with no joints coming immediately over or under headers. Headers shall be spaced not more than 8 feet apart, and there shall be at least 1 header to every 2 stretchers unless otherwise indicated on the plans.

3.4 Copings. Stone for copings shall be selected. Copings shall be as shown on the plans.

3.5 Cores and backing. Cores or backing shall be of stone or concrete masonry as indicated on the plans.

3.5.1 Stone backing shall be laid as specified for face stone, with headers interlocking with face headers when the thickness of the masonry permits. Stone in backing or cores shall break joints with the face stone and bond not less than 12 inches with the face stone and with each other. Stone backing or cores shall be carried up with face stone and at least 50 percent of the

stone shall be of the same size and character as the face stone and shall have parallel ends. When stone is laid in cement mortar, the beds shall be full and shall not exceed 1 inch in thickness, and the joints shall be completely filled and shall not exceed 4 inches in thickness.

3.5.2 Concrete backing or cores shall be of the class shown on the plans and as specified in 520. The concrete shall be so worked and compacted that all spaces around stones are completely filled and an adequate bond with the stone is secured. Construction joints in the concrete, required by intermittent placing, shall be located not less than 6 inches below the top bed of any course of the stone facing. The concrete shall be so placed that the stone masonry facing is not disturbed.

3.6 Metal dowels and cramps. Dowels and cramps shall be of the material, size and shape, and located as indicated on the plans or ordered. Holes for dowels or cramps shall be drilled in the stones before they are placed unless otherwise permitted. Cramps shall be countersunk flush with the top of the stone in which they are set. This work shall be subsidiary.

3.7 Culvert headwalls and retaining walls. In addition to applicable construction requirements, unless otherwise specified on the plans or in the special provisions, culvert headwalls and retaining walls to be constructed of mortar rubble masonry or dry rubble masonry shall conform to the following requirements: At least 75 percent of the stone shall be larger than 6 inches x 9 inches x 12 inches. No dressing, finishing, or coursing will be required. The stone shall be set without disturbing stone already in place. Stone to be laid in mortar shall be clean and moist and shall be placed on a full mortar bed. The stones shall be bonded in a workmanlike manner.

3.8 Weepers. Unless otherwise indicated on the plans, the Contractor shall furnish and place 4 inch weepers in all closed abutments and retaining walls. These weepers shall be approximately 10 feet apart and placed at the elevation which will best drain backfill. French drains of stone or coarse gravel shall be placed adjacent to the fill face of such walls and at such elevations as will permit drainage to and outletting into the weepers.

3.9 Stone Masonry Arches.

3.9.1 Masonry for rings shall be ashlar or mortar squared stone unless otherwise indicated on the plans. Voussoirs shall be full size and shall have a bond of not less than the depth of the stones. Their beds shall be dressed to bring them to radial planes and to permit them to rest properly on the centering. The inside faces of stone backing or spandrel walls and extrados shall be given a finishing coat of 1:2-1/2 cement mortar trowelled smooth, and waterproofed as indicated on the plans.

3.9.2 Masonry in arch rings shall be placed in such a manner as to load the ring uniformly about the center or as indicated on the plans.

Method of Measurement

4.1 Stone masonry except copings will be measured by the cubic yard, to the nearest 0.1 of a cubic yard. The dimensions as shown on the plans or as ordered will be used in computing the stone masonry yardage for payment.

4.2 Stone coping will be measured by the linear foot, to the nearest 0.1 of a foot.

Basis of Payment

5.1 The accepted quantity of each class of stone masonry except copings will be paid for at the contract unit price per cubic yard complete in place, with the exception that masonry steps including the parapet walls will be paid for at 1.5 times the contract unit price per cubic yard for the class of stone masonry involved.

5.2 The accepted quantity of stone coping will be paid for at the contract unit price per linear foot complete in place.

Pay items and units:

570.1	Ashlar Masonry	Cubic Yard
570.2	Mortar Squared Stone Masonry	Cubic Yard
570.3	Dry Squared Stone Masonry	Cubic Yard
570.4	Mortar Rubble Masonry	Cubic Yard
570.5	Dry Rubble Masonry	Cubic Yard
570.6	Stone Coping	Linear Foot
570.9	Resetting Masonry Wall	Cubic Foot

SECTION 572 -- STONE WALL

Description

1.1 This work shall consist of reconstructing stone walls where shown on the plans or as ordered.

Materials

2.1 Stone from the existing stone wall shall be utilized to reconstruct the wall at the specified location.

2.1.1 Any special stone features such as lintels, gate posts, copings markers, etc. shall be retained for resetting.

2.2 Any added stone shall conform to the type used in the original wall.

2.3 Gravel for surface preparation shall meet the requirements of 209.

Construction Requirements

3.1 The reconstructed stone wall shall match the existing wall as closely as possible.

3.1.1 The Contractor shall, by photographs and measurements acceptable to the Engineer, record the width, height and configuration of the existing wall prior to removal. These photographs and measurements along with the prevailing width, height and configuration shall be used to guide the reconstruction of the wall. These records shall be made at intervals of not more than 500 feet and at locations where characteristics of the wall change. The photographs shall become the property of the City at the end of the project.

3.2.1 When existing wall sections designated for reconstruction are in such disrepair that the original wall configuration cannot be determined, these sections shall be rebuilt to match abutting wall segments.

3.2 The stone wall reconstruction shall be supervised by a person with experience in dry masonry construction.

3.3 Care shall be taken to keep weathered faces exposed.

3.4 The Contractor shall retain all stone from existing wall for reuse. Additional stones that may be necessary shall be blended with the existing stones in order to reproduce the appearance of the existing wall.

3.5 The Contractor shall carefully replace chinking, blocking, bond stones and headers, as appropriate to the original style of wall, to ensure the maximum stability of the wall.

3.6 The Contractor shall carefully duplicate special features of the original wall, such as lintels, gate posts, openings, copings, markers, etc.

3.7 The ground surface shall be prepared by removing brush, vegetation, topsoil and unsuitable material. The area shall be rough graded to obtain a reasonably firm and level surface.

Method of Measurement

4.1 Reconstructing stone walls will be measured by the linear foot, to the nearest 1 foot, along the center line of the reconstructed wall.

4.2 Clearing and grubbing will be measured as provided in 201.

4.3 Gravel required for surface preparation will be measured by the cubic yard, complete in place. Limits of gravel will be as shown on the plans, or as ordered.

Basis of Payment

5.1 The accepted quantity of reconstructed wall will be paid for at the contract unit price per linear foot complete in place.

5.1.1 Any additional stone required to complete the reconstruction will be subsidiary.

5.1.2 Reconstruction of special features as defined in 3.6 will be subsidiary.

5.1.3 Photographs and measurement records of the existing wall will be subsidiary.

5.2 Ground surface preparation will be subsidiary.

5.2.1 When special site preparation such as clearing and grubbing or gravel base courses are ordered, this work will be paid under appropriate items of the contract. If appropriate items are not included in the contract, this work will be paid as provided in 109.04.

Pay items and units:

572.1	Reconstructing Stone Wall, One Stone Wide	L.F.
572.2	Reconstructing Stone Wall, Multiple Stones Wide	L.F.
572.3	Reconstructing Stone Wall, Double Faced with Loose Fill	L.F.

SECTION 583 -- RIPRAP

Description

1.1 This work shall consist of a protective covering of stone constructed at the locations shown on the plans or ordered.

Materials

2.1 Field stone, quarry stone, or rock fragments used for riprap shall be sound, of approved quality, and free from structural defects. These stones shall have approximately rectangular shapes with one reasonably flat side for the top surface and shall have minimum dimensions and volumes as listed below:

2.1.1 Riprap A, 1 foot thick. Seventy-five percent of the stones shall have a minimum volume of 2 cubic feet; the remainder shall have a minimum volume of 1/2 cubic foot.

2.1.2 Riprap B, 1-1/2 feet thick. Seventy-five percent of the stones shall have a minimum volume of 8 cubic feet.

2.1.3 Riprap C, 2 feet thick. Seventy-five percent of the stones shall have a minimum volume of 12 cubic feet.

2.1.4 Riprap D, 2-1/2 feet thick. Seventy-five percent of stones shall have a minimum volume of 18 cubic feet.

2.2 Gravel blanket material shall conform to 209.2.1.3.2.

Construction Requirements

3.1 Riprap stones shall be individually laid upward from the toe of the slope with the larger stones at the toe of the slope. The stones shall be laid with close joints roughly perpendicular to the slope. Open joints shall be filled with spalls.

3.2 When a gravel blanket is shown or ordered, the gravel shall be placed in layers not exceeding 12 inches in depth unless otherwise ordered.

3.3 The finished surface shall be reasonably uniform in appearance, approximately parallel to and within 6 inches of the lines and grades shown or ordered.

Method of Measurement

4.1 Riprap will be measured by the cubic yard and computed to the nearest 0.1 of a cubic yard by multiplying the actual area of the accepted and approved riprap by the nominal depth as shown or ordered.

Basis of Payment

5.1 The accepted quantity of riprap of the type specified will be paid for at the contract unit price per cubic yard complete in place.

5.2 Gravel blanket material specified or ordered will be paid for under 209.

5.3 The accepted quantity of excavation required for placing riprap and for placing any underlying gravel blanket will be paid for under the item of excavation being performed. Excavation above refers only to excavation of original ground or to material ordered removed not shown on the plans.

5.4 Free borrow will not be required to replace the accepted quantity of stone obtained from the excavation. However, when the plans do not call for borrow, but the quantity of material removed from excavation for use under this item requires the Contractor to furnish borrow to complete the work, such borrow will be subsidiary.

Pay Items and Units:

583.1	Riprap A	Cubic Yard
583.2	Riprap B	Cubic Yard
583.3	Riprap C	Cubic Yard
583.4	Riprap D	Cubic Yard

SECTION 585 -- STONE FILL

Description

1.1 This work shall consist of furnishing and placing a dense stone fill at the locations shown on the plans or ordered.

Materials

2.1 Stone for stone fill shall be approved quarry stone, or broken rock of a hard, sound, and durable quality. The stones and spalls shall be so graded as to produce a dense fill with a minimum of voids.

2.1.1 Class A stone shall be irregular in shape with approximately 50 percent of the mass having a volume of 12 cubic feet, approximately 30 percent of the mass ranging between 3 and 12 cubic feet, approximately 10 percent of the mass ranging between 1 and 3 cubic feet, and the remainder of the mass composed of spalls.

2.1.2 Class B stone shall be irregular in shape with approximately 50 percent of the mass having a minimum volume of 3 cubic feet, approximately 40 percent of the mass ranging between 1 and 3 cubic feet, and the remainder of the mass composed of spalls.

2.1.3 Class C stone shall consist of clean, durable fragments of ledge rock of uniform quality, reasonably free from thin or elongated pieces. The stone shall be made from rock which is free from topsoil and other organic material. The stone shall be graded as follows:

Sieve Size	Percentage by Weight Passing
12 inch	100
4 inch	50 - 90
1-1/2 inch	0 - 30
3/4 inch	0 - 10

2.1.4 Class D stone shall conform to 520.2.2.3, Table 3 – Coarse Aggregate, Standard Stone Size No. 467.

2.1.5 Spalls for filling voids shall be stones or broken rock ranging downward from a maximum size of 1 cubic foot.

2.2 Gravel blanket material shall conform to 209.2.1.3.2.

2.3 Geotextile shall conform to 593.

Construction Requirements

3.1 Stones and spalls for stone fill shall be deposited and graded to eliminate voids and obtain a dense mass throughout the course. The spalls shall be tamped into place using an equipment bucket or other approved method.

3.1.1 When stone fill is placed on a slope, the stones shall be deposited in such a manner as to not unnecessarily dislodge the underlying material.

3.1.2 When stone fill is placed on a geotextile, it shall be deposited in such a manner so as to maintain the integrity of the geotextile.

3.2 When gravel blanket is shown or ordered, the gravel shall be placed in layers not exceeding 12 inches in depth unless otherwise ordered.

3.3 The completed surface shall approximate the lines and grades shown or ordered. When ordered, stone placed over 1 foot outside or above such lines and grades shall be removed.

Method of Measurement

4.1 Stone fill will be measured by the cubic yard and in accordance with 109.01.

Basis of Payment

5.1 The accepted quantity of stone fill of the class specified will be paid for at the contract unit price per cubic yard complete in place.

5.2 Gravel blanket material specified or ordered will be paid for under 209.

5.3 Geotextile specified or ordered will be paid under 593.

5.4 The accepted quantity of excavation required for placing stone fill and for placing any underlying gravel blanket will be paid for under the item of excavation being performed. Excavation above refers only to excavation of
original ground or to material ordered removed not shown on the plans.

5.5 Free borrow will not be required to replace the accepted quantity of stone obtained from the excavation. However, when the plans do not call for borrow, but the quantity of material removed from excavation for use under this item requires the Contractor to furnish borrow to complete the work, such borrow will be subsidiary.

Pay Items and Units:

585.1	Stone Fill, Class A	Cubic Yard
585.2	Stone Fill, Class B	Cubic Yard
585.3	Stone Fill, Class C	Cubic Yard
585.4	Stone Fill, Class D	Cubic Yard

SECTION 586 -- PLACING EXCAVATED ROCK

Description

1.1 This work shall consist of placing excavated rock in designated locations and to the thickness or shape shown on the plans or ordered.

Materials

2.1 The material shall be approved from excavation within the project or an off-site source.

Construction Requirements

3.1 The rock shall be close-packed and keyed together to be stable. The surface shall conform approximately to the specified lines and grades. Where ditches and channels are being lined or covered, the rock shall be left in such a position that the required waterway area is obtained. Rejected rock remaining outside of the lines and grades shown or ordered shall be removed. Fine grading will not be required.

Method of Measurement

4.1 Excavated rock placed under this item will be measured by the cubic yard.

Basis of Payment

5.1 The accepted quantity of excavated rock placed will be paid for at the contract unit price per cubic yard complete in place.

5.2 The accepted quantity of excavation required for placing excavated rock will be paid for under the item of excavation being performed. Excavation above refers only to excavation of original ground or to material ordered removed not shown on the plans.

Pay item and unit:

586	Placing Excavated Rock	Cubic Yard
586.1	Placing Excavated Rock in Stockpiles	Cubic Yard
586.2	Placing Excavated Rock for Channel Protection	Cubic Yard
586.3	Placing Excavated Rock for slope Protection	Cubic Yard
586.4	Placing Excavated Rock for Rock Lined Ditches	Cubic Yard

SECTION 593 -- GEOTEXTILES

Description

1.1 This work shall consist of furnishing and installing geotextile fabric as shown on the plans or as ordered.

Materials

2.1 Woven Geotextile shall be used as ordered by the engineer if required to stabilize the base material and shall be one of the following products:

2.1.1 Carthage FX-66 as manufactured by Carthage Mills, Cincinnati, OH.

2.1.2 Mirafi 600X as manufactured by Mirafi Inc., Charlotte, NC.

2.1.3 Amoco 2006 as manufactured by Amoco Fabrics & Fibers Company, Atlanta, GA.

2.1.4 Exxon GTF-300 as manufactured by Exxon Chemical Company, Atlanta, GA.

2.2 Equivalent. Approval of a product as an equivalent to any of the above may be given on the basis of analysis and test results of samples and formulations submitted by the manufacturer to the Engineer. Request for approval shall be made in sufficient time for the materials to be evaluated.

2.3 Certification. Prior to, or at the time of field delivery, the contractor shall submit 3 copies of a certificate of compliance as specified in 106.04.

2.3.1 Supplementing the above certificates, the Engineer shall be furnished with a copy of the manufacturer's certificate of materials showing the physical properties, chemical composition, methods of testing and other relevant data.

2.3.2 In addition to the above, each roll shall be clearly labeled so as to easily identify the product in the field. The label shall include as a minimum the manufacturer's name, product name and number, and the contract item name and number.

2.4 Staples or pins required to hold the geotextile prior to placing overlying materials shall be those prescribed by the manufacturer.

Construction Requirements

3.1 Protection of Geotextile. To prevent damaging the fabric, the Contractor shall exercise necessary care while transporting, storing and installing the fabric. Prior to installation, the fabric

shall be protected from weather, direct sunlight or other ultra-violet exposure, dust, mud, dirt, debris and other elements which may affect its performance. Fabric which is torn, punctured or otherwise damaged shall not be placed. After placement, fabric shall not be left uncovered for more than 5 days. Traffic or construction equipment will not be permitted directly on the geotextile.

3.2 Placement of Geotextile. The geotextile shall be placed in accordance with the plans, the manufacturer's requirements and the following:

3.2.1 Prior to placement of the fabric, the site shall be prepared to provide a smooth surface which is free from debris, obstructions, and depressions which could result in gaps, tears or punctures in the fabric during cover operations. The fabric shall be unrolled loosely and positioned as evenly as possible on the surface to eliminate wrinkles and folds.

3.2.2 Adjacent sheets shall be overlapped by a minimum of 18 inches. Larger overlaps may be required by the Engineer if gaps between adjacent sheets occur during placement of overlying material. Successive lengths of fabric shall be placed in such a manner that the fill being placed will not be pushed below the fabric. Pins or staples may be used to anchor the fabric as directed by the Engineer. The fabric should be pinned in a loose condition so that it easily conforms to the ground surface.

3.2.3 The ends of the fabric shall be buried to prevent cavitation and subsequent erosion along the edges.

3.3 Repair of Geotextile. Fabric which is damaged after placement shall be replaced, repaired by stitching or patched. Patches shall be of the same materials as the placed geotextile. The patch shall be joined to the existing fabric using overlapped seams as directed by the Engineer.

3.4 Covering Operation. Placement of the fill above the geotextile shall be in accordance with the plans, the geotextile manufacturer's requirements and the following:

3.4.1 Following placement of fabric along the bottom of the excavation, the fill shall be placed and compacted as directed by the Engineer. Any ruts occurring during construction shall be filled with additional fill and compacted to the specified density.

3.4.2 Necessary care shall be taken to avoid tearing or puncturing the fabric. Fabric which is damaged as a result of

careless or improper placement of structural fill, grading techniques or excessive equipment traffic shall be repaired or replaced at the expense of the Contractor.

Method of Measurement

4.1 Geotextile will be measured by the square yard as determined by actual surface measurements of the length of and width of material in place. Additional material used for overlaps, seams and repairs will not be measured.

Basis of Payment

5.1 The accepted quantity of geotextile will be paid for at the contract unit price per square yard complete in place. The cost of pins, staples and seams is considered subsidiary to the geotextile installation.

Pay Item and Unit:

593.2	Geotextile, Woven	Square Yard

SECTION 601 -- SANITARY SEWERS

Description

1.1 This works shall consist of furnishing and installing sanitary sewer pipes at the locations shown or ordered, including all necessary joints, fittings and connections as required.

1.1.1 Sanitary sewers shall conform to the requirements of the latest edition of the NHDES-DWSPC "Standards of Design for Sewage and Wastewater Treatment Facilities" and as set forth in these specifications.

Materials

2.1 Reinforced Concrete Pipe, Circular.

2.1.1 This pipe shall conform to the requirements of AASHTO M 170, except as follows: Wall A thickness will be allowed in Class III pipe only. When the plans call for reinforced concrete pipe capable of withstanding an ultimate load greater than 3750 D, the design requirements of Class V shall be met with further provision that the pipe will withstand the ultimate D-load of 4000D.

2.1.2 Basis of acceptance of concrete pipe shall conform to AASHTO M 170, Section 5.1.1. Test requirements shall be as provided in Section 10.3.1 and 10.5 with the further provision that the pipe will withstand an additional ten percent of the D-load specified or brought to destruction. Permissible variation in pipe tolerances shall conform to AASHTO M 170, Section 11.

Table 601-1 -- Minimum Strength Requirements

D-Load to produce the ultimate load = Class	D-Load to produce a0.01 inch crack	AASHTO Designation Class
1500D	1000	II
2000D	1350	III
3000D	2000	IV
3750D	3000	V
4000D	----	---

2.1.3 Workmanship and finish shall conform to AASHTO M 170, Section 12. Pipe shall be subject to rejection on account of failure to conform to any of the specification requirements of AASHTO M 170, Section 15. Individual sections of pipe may be rejected because of the following reasons:

(a) Fracture or cracks passing through the wall, except for a single crack that does not exceed the depth of a joint.
(b) Defects that indicate imperfect proportioning, mixing and molding.
(c) Surface defects indicating honey-combed or open texture.
(d) Damaged or cracked ends where such damage would prevent making a satisfactory joint.
(e) Any continuous crack having a surface width of 0.01 inch or more and extending for a length of 12 inches or more, regardless of position in the wall of the pipe.
(f) The exposure of any steel in the barrel or the outside of the pipe indicating the displacement of reinforcement. Steel exposed at the ends will not be cause for rejection if a satisfactory join can be made.

2.1.4 Markings on pipe shall conform to AASHTO M 170, Section 16 with the following information clearly marked on each section of pipe.

(a) The pipe class and specification designation
(b) The date of manufacture
(c) The name or trademark of the manufacturer
(d) Identification of plant

2.1.5 Concrete pipe shall be joined by using flexible water tight gaskets conforming to AASHTO M 198.

2.1.6 The interior of all reinforced concrete pipe for sanitary sewers shall have a coal-tar-epoxy coating.

2.1.6.1 The coal-tar-epoxy coating shall be applied in two coats to a sandblasted surface with a minimum dry film thickness of 8.0 mils per coat and in a manner consistent with the manufacturer's recommendations. Epoxy coatings shall only be applied after the pipe has cured sufficiently to obtain a dry surface for adequate coating bond.

2.1.6.2 The coal-tar-epoxy shall be Bitumastic No. 300- M as manufactured by Koppers Company, Inc. or Tneme-Tar Hi- Build Coal Tar Epoxy as manufactured by Tnemec Company, Inc. or approved equal.

2.2 Ductile Iron Pipe.

2.2.1 Ductile iron pipe and fittings shall conform to the following standards of the American Water Works Association:

(a) AWWA C151 for ductile iron pipe, centrifugally cast in metal or sand lined molds, for water or other liquids;

(b) AWWA C150 for thickness design of ductile iron pipe and with ASTM A 536

ductile iron castings.

2.2.2 Joints shall be mechanical type, push-on type, or ball-and-socket type.

2.2.3 The interior of all ductile iron pipe for sanitary sewer shall have a cement lining

2.2.3.1. The cement lining shall be to a double thickness and seal coated in accordance with ANSI Specification A21.4, Cement Mortar Lining for Cast-Iron and Fittings for Water.

2.2.4 The interior of all ductile iron pipe for sanitary sewers shall have a coal-tar-epoxy coating.

2.2.4.1 The coal-tar-epoxy coating shall be applied in two coats with a minimum dry film thickness of 8.0 mils per coat and in a manner consistent with the manufacturer's recommendations.

2.2.4.2 The coal-tar-epoxy shall be Bitumastic No. 300- M as manufactured by Koppers Company, Inc. or Tneme-Tar Hi- Build Coal Tar Epoxy as manufactured by Tnemec Company, Inc. or approved equal.

2.2.5 The exterior of all ductile iron pipe for sanitary sewer shall have a bituminous coating.

2.3 Plastic Pipe.

2.3.1 Plastic gravity sewer pipe and fittings shall comply with the standards listed in Table 601-2:

Table 601-2 -- Plastic Pipe

ASTM Standard	Generic Pipe Material	Sizes Approved
D3034	*PVC (solid wall)	8" through 15" (SDR 35)
F679	PVC (solid wall)	18" through 27" (T-1 & T-2)
F789	PVC (solid wall)	4" through 18" (T-1 to T-3)
F794	PVC (ribbed wall)	8" through 36"
D2680	*ABS (composite wall)	8" through 15"

*PVC: poly vinyl chloride
*ABS: acrylonitrile-butadiene-styrene

2.3.2 Plastic sewer pipe shall have a pipe stiffness rating of at least 46 pounds per square inch at 5 percent pipe diameter deflection, as measured in accordance with ASTM D2412 during manufacturing.

2.3.3 Joint seals for PVC pipe shall be oil resistant compression rings of elastomeric material conforming to ASTM D3212 and shall be push-on, bell-and-spigot type.

2.3.4 PVC pipe used for force mains shall have a Standard Dimension Ratio (SDR) no higher than 26 and shall conform to ASTM D2241 and ASTM D1784.

2.3.5 Force mains shall be designed to withstand hydrostatic pressures of at least 2 ½ times the design total dynamic head.

2.3.1.2 Pipe and fittings for PVC gravity sewer pipe shall have a Standard Dimension Ratio (SDR) of 35 or equivalent in load carrying performance.

2.4 Fittings.

2.4.1 Unless otherwise specified or ordered, tees, wyes and others special shapes shall be equal to the type, diameter, class and joint of pipe with which they are used.

2.5 Concrete for encasements and chimneys shall conform to the requirements for Class A (3000 psi) concrete as specified in Section 520.

2.6 Bedding and backfill shall conform to the requirements of Section 209.

Construction Requirements

3.1 Sanitary sewers shall be constructed according to the requirements of 603 3.1, 3.2, 3.3 and 3.4 except as follows:

3.1.1 Plastic Pipe.

3.1.1.1 Special care shall be taken to ensure that the first two to three feet of backfill above the sand cushion over the pipe is placed carefully rather than dropped, so as to avoid damaging the pipe from impact during placement.

3.1.1.2 There shall be at least 30 inches of cover over the top of the pipe before the trench is wheel loaded. There shall be at least 48 inches of cover over the top of the pipe before mobile trench compactors of the hydro-hammer or impactor type are used.

3.1.1.3 All necessary precautions shall be taken to prevent flotation of the pipe in the trench.

3.1.1.4 The pipe shall not be driven down to the required grade by striking with a shovel handle, timber or other unyielding object.

3.1.1.5 Suitable devices shall be used to force the pipe units together. Care shall be taken not to split or otherwise damage the joints.

3.1.1.6 All plastic sewer pipe shall be deflection tested not less than 30 days following installation.

3.1.1.7 The maximum allowable deflection of flexible sewer pipe shall be 7 ½% of average inside diameter. Deflection shall be measured as the reduction in the vertical diameter of the pipe (diametrically). Deflection testing shall be performed on random manhole-to-manhole sections using either a mandrel (supplied or available from pipe supplier or manufacturer) through the pipeline on the basis of a "GO-NO-GO" condition or by an approved deflectometer. If the mandrel does not pass through the pipeline, the entire section shall be excavated and relayed; and after backfilling and adequate compaction is assured, the pipeline shall be re-tested.

3.2 Sanitary services shall be installed according to the latest edition of the New Hampshire Department of Environmental Services -- Division of Water Supply and Pollution Control, "House and Sewer Details" and the City of Manchester "Sewer Use Ordinance". If the New Hampshire Department of Environmental Services -- Division of Water Supply and Pollution Control, "House and Sewer Details" and the City of Manchester, New Hampshire "Sewer Use Ordinance" differ, the more stringent as interpreted by the Engineer, shall apply.

3.2.1 Connecting Sanitary Services.

3.2.1.1. Service connections shall use a sanitary tee or wye fitting for all new sewer construction. Whenever practical, sanitary service connections shall be made at the same time as the new sewer line is constructed

3.2.1.2 Building connections shall have the sewer fitting set at 45° to provide a gradual slope entry to the sewer.

3.2.1.3 If the vertical drop between the existing service pipe and the new sanitary sewer is greater than four (4) feet, a chimney shall be constructed (see Figure 601- 6)

3.2.1.4 Abandoned sanitary service pipes shall be removed and disposed of or plugged and sealed watertight as ordered by the Engineer.

3.2.1.5 All joints shall be properly matched with the pipe materials use with appropriate flexible joint adaptors and couplings.

3.2.1.6 For existing sewers where fittings cannot be installed, saddle connections shall be used. Saddle joints shall be encased in concrete.

3.2.1.7 Where the distance between the building and the sewer main is greater than 75 feet, a sewer service cleanout shall be provided.

3.2.1.8 Gas traps and/or grease traps may be required at the discretion of the Director

of Public Works or of the Building Commissioner. A detail of each is provided at the end of this section.

Leakage Testing

4.1 All new sewers and force mains shall be tested for watertighness by the use of either water or low- pressure air test. There shall be no more than 1000 feet of untested sewer constructed at any time. The Engineer shall decide which of the following test procedures to be used.

4.2 The rate of infiltration or exfiltration shall not be greater than 100 gallons per day per inch of pipe diameter per mile of pipe for sizes to 48 inches, and not greater than 200 gallons per day per inch of pipe diameter per mile for sizes over 48 inches.

4.3 Low pressure air testing shall be in conformance with ASTM C828.

4.4 Tables are provided at the end of this section as guidelines for testing sewer lines.

4.4 Sanitary Service Connections.

4.4.1 Prior to backfilling, the completed service connection shall be tested for leakage according to the procedures stated in the New Hampshire Department of Environmental Services -- Division of Water Supply and Pollution Control Specification "House Sewer Details", Item 7 "Testing".

4.5 Gravity Sewers.

4.5.1 When the groundwater level is at or above the crown of the pipe, the infiltration test may be used. The section being tested shall be isolated by watertight end. After conditions have stabilized, leakage shall be measured by collecting flow from a water pipe, through a clay dam or by measurement with a vee-notch weir or other acceptable means.

4.5.2 Where groundwater is below the crown of the pipe, the exfiltration test shall be used. The test section shall be isolated and filled with water to an elevation two feet above the crown of the pipe at the upstream manhole. The amount of water necessary to maintain the level in the manhole shall be measured (See Table 601-1).

4.6 Force Main.

4.6.1 Force mains shall be tested in accordance with section 4 of AWWA C600 “Installation of Cast Iron Water Mains”, at a pressure equal to 150% of the design operating total dynamic head.

Method of Measurement

5.1 Sewer pipes will be measured by the linear foot to the nearest 0.1 of a foot, according to type, size, class and depth, as the horizontal projection of the distance between manholes, from inside face of manhole walls, or inside face of manhole wall to end of stub or connection. Measurement shall be made along the central axis of the pipe.

5.1.1 The depth for measurement shall be determined as the vertical distance, to the nearest 1.0 foot, between the original ground and the flow line of the pipe as installed.

5.2 Sanitary service connections will be measured by the linear foot, to the nearest 0.1 of a foot, along the central axis of the pipe, from the point of connection with the specified fitting at the sewer line, manhole or chimney to the upstream end of the fitting connecting the new with the existing service line.

5.3 Drop connections will be measured by the vertical foot, to the nearest 0.1 of a foot, between the invert of the higher pipe entering the manhole and the invert of the 90 degree bend at the bottom of the manhole.

5.4 Service chimneys will be measured by the vertical foot to the nearest 0.1 of a foot, from the centerline of the sewer to the top of the uppermost wye connection.

5.5 Adjusting existing service connections to avoid a conflict with the proposed sewer, will be measured as a unit per service connection adjusted.

5.6 Sewer service cleanouts shall be measured by the number of units installed. One cleanout shall be a unit.

Basis of Payment

6.1 The accepted quantities of sewer pipe will be paid for at the contract unit price per linear foot of the type, size, class and depth specified complete in place, which price shall constitute full compensation for excavation (except rock), backfill, bedding and furnishing all materials including fittings, tools, equipment, labor and incidentals needed to complete the work, including those necessary to test and inspect the sewer line.

6.2 The Contractor shall be paid the contract unit price per linear foot of service connection, complete in place which price shall constitute full compensation for excavation (except rock), backfill, bedding and furnishing all materials including wyes, tees, saddles, fittings, tools, equipment, labor and incidentals needed to complete the work, including those necessary to test and inspect the sewer service line.

6.3 The Contractor shall be paid the contract unit price per each adjusted service connection, complete in place which price shall constitute full compensation for excavation (except rock), backfill, bedding and furnishing all materials, including fittings, tools, equipment, labor and incidentals needed to complete the work, including those necessary to test and inspect the sewer service line.

6.4 The Contractor shall be paid the contract unit price per vertical foot of chimney, complete in place which price shall constitute full compensation for furnishing all materials, including pipe, fittings, sand, concrete, tools, equipment and labor and incidentals needed to complete the work.

6.5 The Contractor shall be paid the contract unit price per vertical foot of drop connection, of the size, type and class specified, complete in place which price shall constitute full compensation for furnishing all materials, including pipe, fittings, concrete, tools, equipment, labor and incidentals needed to complete the work.

6.6 Temporary diversion of groundwater, including trenching or pumping directly from the trench shall be subsidiary to the pipe installation. When well points or other specific dewatering devices are required or ordered, they will be paid as shown or as extra work.

6.7 Temporary diversion of sewer flows shall be subsidiary to pipe installation.

6.8 The accepted quantities of sewer service cleanouts will be paid for at the contract unit price for each, complete in place, which price shall constitute full compensation for excavation, backfill and furnishing all materials, tools, equipment, labor and incidental needed to complete the work.

KEY TO ITEM NUMBERS FOR SEWER PIPE

Item Number

601	A	B	C	D	E	Item Number	Unit
601						Section Number	
	.A					Material	
		B				Class, thickness or other	
			C			Depth range	
				D	E	Diameter	
	.0					Reinforced Concrete Pipe (Circular)	Linear Foot
		C				Class	
		2				Class II	
		3				Class III	
		4				Class IV	
		5				Class V	
	.1					Reinforced Concrete Pipe (Arch)	Linear Foot
		C				Class	
		2				Class II	

3 Class III
4 Class IV
5 Class V

.2 Ductile Iron Linear Foot
C ANSI Thickness Class
1 51
2 52
3 53
4 54
5 55
6 56

.3 Plastic Pipe (PVC) Linear Foot

1 SDR 26
2 SDR 35

.4 Plastic Pipe (ABS)
1 SDR 26
2 SDR 35

C Depth Range
1 0-10 feet
2 10-15 feet
3 15-20 feet
4 Over 20 feet

All Items to Read:
"...'Including Excavation, Bedding and Backfill'"

Examples:

601.04118 18" Reinforced Concrete Sewer Pipe, Class IV (0'-10'Deep)
601.25118 18" Ductile Iron Pipe, Class 55 (0'-10' Deep)
601.32118 18" PVC Pipe, SDR 35 (0'-10' Deep)

Additional Pay Items and Units:

601.4	Inside Drop Connection	Each
601.5	Sanitary Service Connection	Linear Foot
601.6	Relocating Existing Sanitary Service Connection	Each
601.7	Service Chimney	Vertical Foot

601.8	Saddle	Each
601.81	Concrete Encased Saddles	Each
601.9	Sanitary Service Cleanout	Each

TABLE 601-3

HYDROSTATIC TESTING TABLE FOR FORCE MAINS

Allowable Leakage per 1000 ft of Pipeline*-gph

	Nominal pipe Diameter (Inches)								
P#**	2	3	4	5	6	8	12	14	16
450	0.32	0.48	0.64	0.95	1.27	1.59	1.91	2.23	2.55
400	0.30	0.45	0.60	0.90	1.20	1.50	1.80	2.10	2.40
350	0.28	0.42	0.56	0.84	1.12	1.40	1.69	1.97	2.25
300	0.26	0.39	0.52	0.78	1.04	1.30	1.56	1.82	2.08
275	0.25	0.37	0.50	0.75	1.00	1.24	1.49	1.74	1.99
250	0.24	0.36	0.47	0.71	0.95	1.19	1.42	1.66	1.90
200	0.21	0.32	0.43	0.64	0.85	1.06	1.28	1.48	1.70
175	0.20	0.30	0.40	0.59	0.80	0.99	1.19	1.39	1.59
150	0.19	0.28	0.37	0.55	0.74	0.92	1.10	1.29	1.47
125	0.17	0.25	0.34	0.50	0.67	0.84	1.01	1.18	1.34
100	0.15	0.23	0.30	0.45	0.60	0.75	0.90	1.05	1.20

* For pipe with 18 ft nominal lengths. To obtain the recommended allowable leakage for pipe with 20 ft nominal lengths, multiply the leakage calculated from the table by 0.9. If the pipeline under test contains sections of various diameters, the allowable leakage will be the sum of the computed leakage for each size.

** #P = Average Test Pressure, psi.

LOW PRESSURE AIR TEST FOR SANITARY SEWERS

Introduction

Numerous laboratory and field air tests have been devised over the years since the early 1960's. Much of the information contained in these tests was utilized by the American Society for Testing and Materials (ASTM) when preparing ASTM C 828, a low-pressure air test for sanitary sewers.

Described below is the procedure for air testing sewer lines to demonstrate the integrity of the installed material and the construction methods.

Summary of Method

The section of the sewer line to be tested is plugged. Low-pressure air is introduced into the plugged line. The amount and rate of air loss is used to determine the acceptability of the section being tested.

Preparation of the Sewer Line

Flush and clean the sewer line prior to testing, thus serving to wet the pipe surface as well as clean out any debris. A wetted interior pipe surface will produce more consistent results. Plug all pipe outlets to resist the test pressure. Give special attention to plugs.

Procedures

Determine the test duration for the section under test by computation form the applicable equations shown in ASTM C 828, or from prepared air test tables. The pressure-holding time is based on an average holding pressure of 3 psi (21 kPa) gage or a drop from 3.5 psi (24 kPa) to 2.5 psi (17 kPa) gage.

Add air until the internal air pressure of the sewer line is raised to approximately 4.0 psi (28 kPa) gage. After an internal pressure of approximately 4.0 psig is obtained, allow time for the air pressure to stabilize. The pressure will normally show some drop until the temperature of the air in the test section stabilizes.

When the pressure has stabilized and is at or above the starting test pressure of 3.5 psi (24 kPa) gage, commence the test. Before starting the test, the pressure may be allowed to drop to 3.5 psig. Record the drop in pressure for the test period. If the pressure has dropped more than 1.0 psi (7 kPa) gage during the test period, the line is presumed to have failed, The test may be discontinued when the prescribed test time has been completed even though the 1.0 psig drop has not occurred.

The test procedure may be used as a presumptive test which enables the installer to backfill and subsequent

construction activities.

If the pipe to be tested is submerged in ground water, a water infiltration test should be used.

Safety

The air test may be dangerous if, because of lack of understanding or carelessness, a line is improperly prepared.

It is extremely important that the various plugs be installed and braced in such a way as to prevent blowouts. Inasmuch as a force of 250lbf (112 N) is exerted on an 8-in. (203-mm) plug by an internal pipe pressure of 5 psi (34 kPa), it should be realized that sudden expulsion of a improperly installed plug could cause serious personal injury.

As a safety precaution, pressurizing equipment may include a regulator or relief valve set at perhaps 10 psi (69 kPa) to avoid over-pressurizing and damaging an otherwise acceptable line. No one shall be allowed in the manholes during testing.

Table

The attached air test table (601-5) has been prepared utilizing applicable equations from ASTM C 828. It is based on an allowable air loss of 0.003 ft^3/min-ft^2 of internal pipe surface, a maximum air loss per test section of 3.5 ft^3/min and a minimum significant air loss per test section of 2.0 ft^3/min would be exceeded using the allowable loss of air per square foot of internal pipe surface may be tested in segments where total air loss would be between 2.0 and 3.5 ft^3/min.) It applies when testing one pipe diameter only and for convenience ignores 4" and 6" insignificant differences in test time.

TABLE 601-5

AIR TEST TABLE

Based on equations from ASTM C 828
SPECIFICATION TIME (MIN:SEC) REQUIRED FOR PRESSURE DROP
FROM 3-1/2 TO 2-1/2 PSIG
WHEN TESTING ONE PIPE DIAMETER ONLY

	PIPE DIAMETER (INCHES)								
L*	4	6	8	10	12	15	18	21	24
25	0:04	0:10	0:18	0:28	0:40	1:02	1:29	2:01	2:38
50	0:09	0:20	0:35	0:55	1:19	2:04	2:58	4:03	5:17
75	0:13	0:30	0:53	1:23	1:59	3:06	4:27	6:04	7:55
100	0:18	0:40	1:10	1:50	2:38	4:08	5:56	8:05	10:34
125	0:22	0:50	1:28	2:18	3:18	5:09	7:26	9:55	11:20
150	0:26	0:59	1:46	2:45	3:58	6:11	8:30		
175	0:31	1:09	2:03	3:13	4:37	7:05			
200	0:35	1:19	2:21	3:40	5:17				12:06
225	0:40	1:29	2:38	4:08	5:40			10:25	13:36
250	0:44	1:39	2:56	4:35			8:31	11:35	15:07
275	0:48	1:49	3:14	4:43			9:21	12:44	16:38
300	0:53	1:59	3:31				10:12	13:53	18:09
350	1:02	2:19	3:47			8:16	11:54	16:12	21:10
400	1:10	2:38			6:03	9:27	13:36	18:31	24:12
450	1:19	2:50			6:48	10:38	15:19	20:50	27:13
500	1:28			5:14	7:34	11:49	17:01	23:09	30:14

*L = LENGTH OF LINE, FEET

NOTE: If the pipeline to be tested is beneath the groundwater level, the test pressure shall be increased 0.433 psi for each foot the groundwater level is above the crown of the pipe.

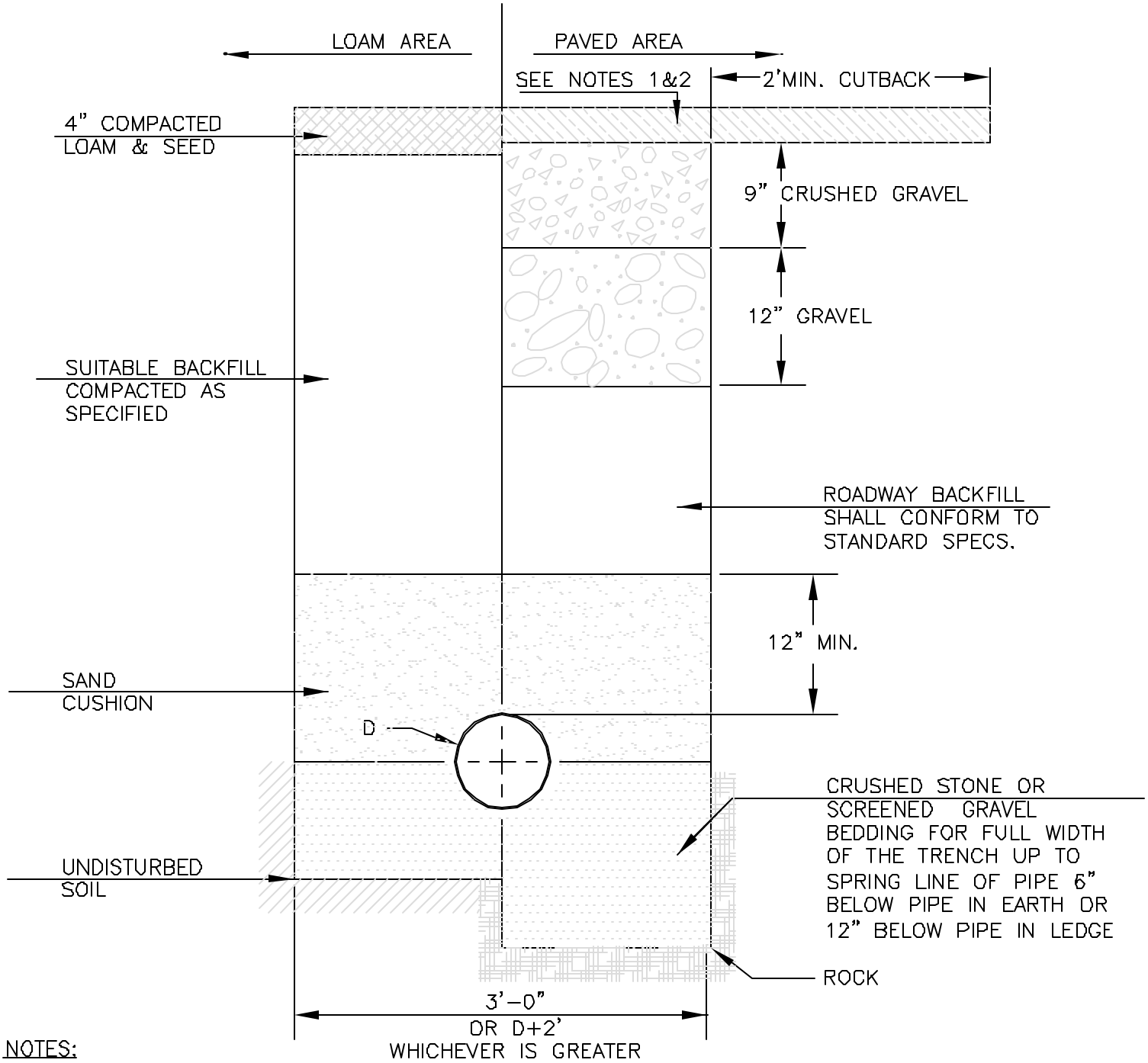

NOTES:

1.) PAVEMENT REPAIR IN EXISTING ROADWAYS SHALL CONFORM TO STREET OPENING REGULATIONS. DEPTH FOR BITUMINOUS PAVEMENT SHALL BE EQUAL TO EXISTING PAVEMENT WITH 3" MINIMUM. (1" WEARING, 2" BASE).

2.) NEW ROADWAY CONSTRUCTION SHALL CONFORM TO SUBDIVISION SPECIFICATIONS.

3.) IN LIEU OF THE 12" GRAVEL COURSE AND 9" OF CRUSHED GRAVEL, 18" OF CRUSHED GRAVEL OR RECLAIMED STABILIZED BASE MAY BE USED AS A BASE FOR THE PAVEMENT REPAIR.

4.) MATERIAL SHALL BE REPLACED IN KIND WHENEVER POSSIBLE.

5.) A MINIMUM 2' CUTBACK IS REQUIRED AT THE TOP OF THE TRENCH WALL OVER UNDISTURBED MATERIAL.

TYPICAL SEWER TRENCH DETAIL

S:\DWG\DETAILS\601-1 Swrtrnch.dwg

NOT TO SCALE

FIGURE 601-1

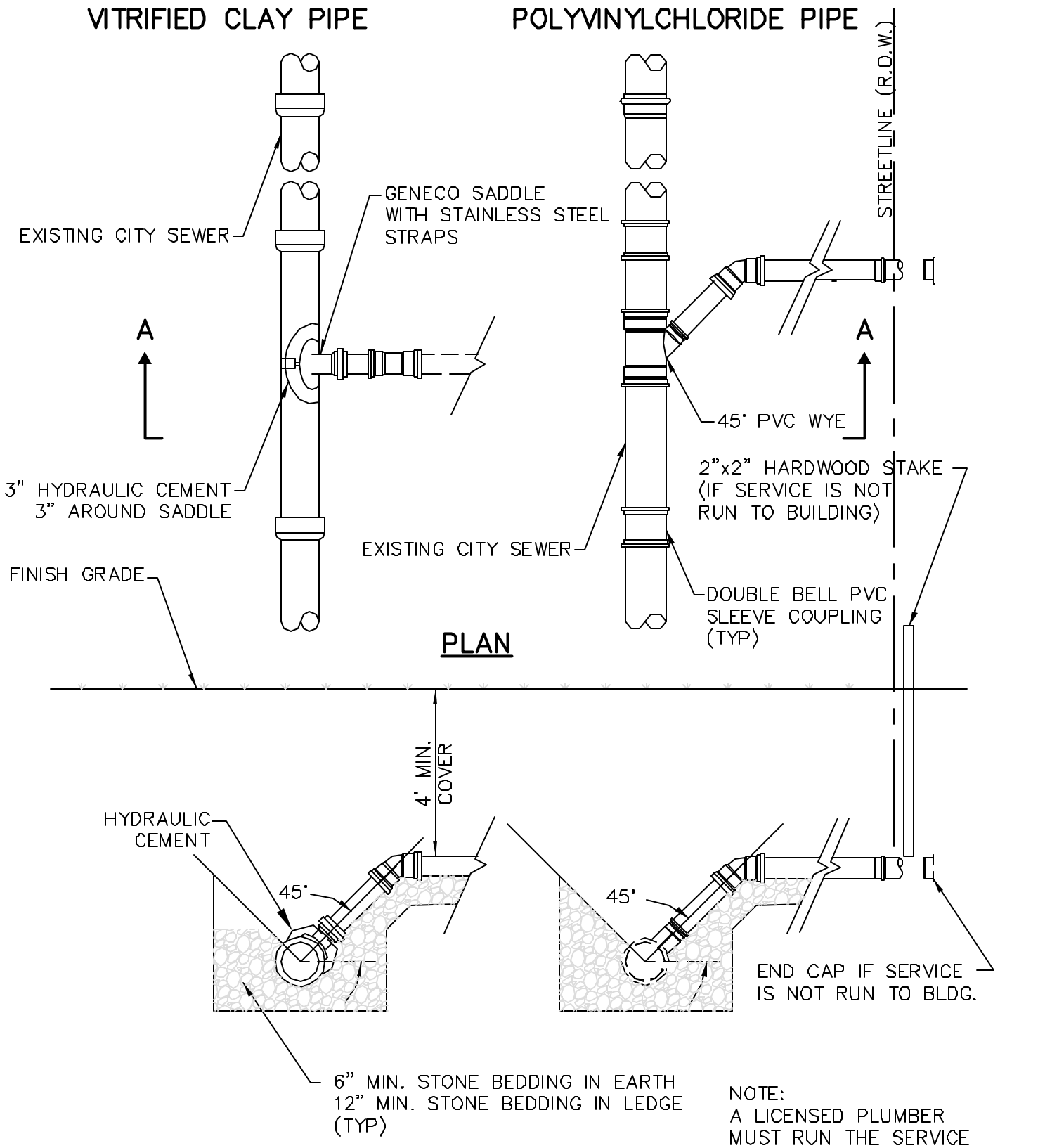

NOTE:
A LICENSED PLUMBER MUST RUN THE SERVICE TO THE BUILDING AFTER OBTAINING A CLASS 'A' PERMIT

TYPICAL SEWER CONNECTION (TYING INTO EXISTING MAINS)

S:\DWG\DETAILS\601-2 SWRCON.DWG

NOT TO SCALE

FIGURE 601–2

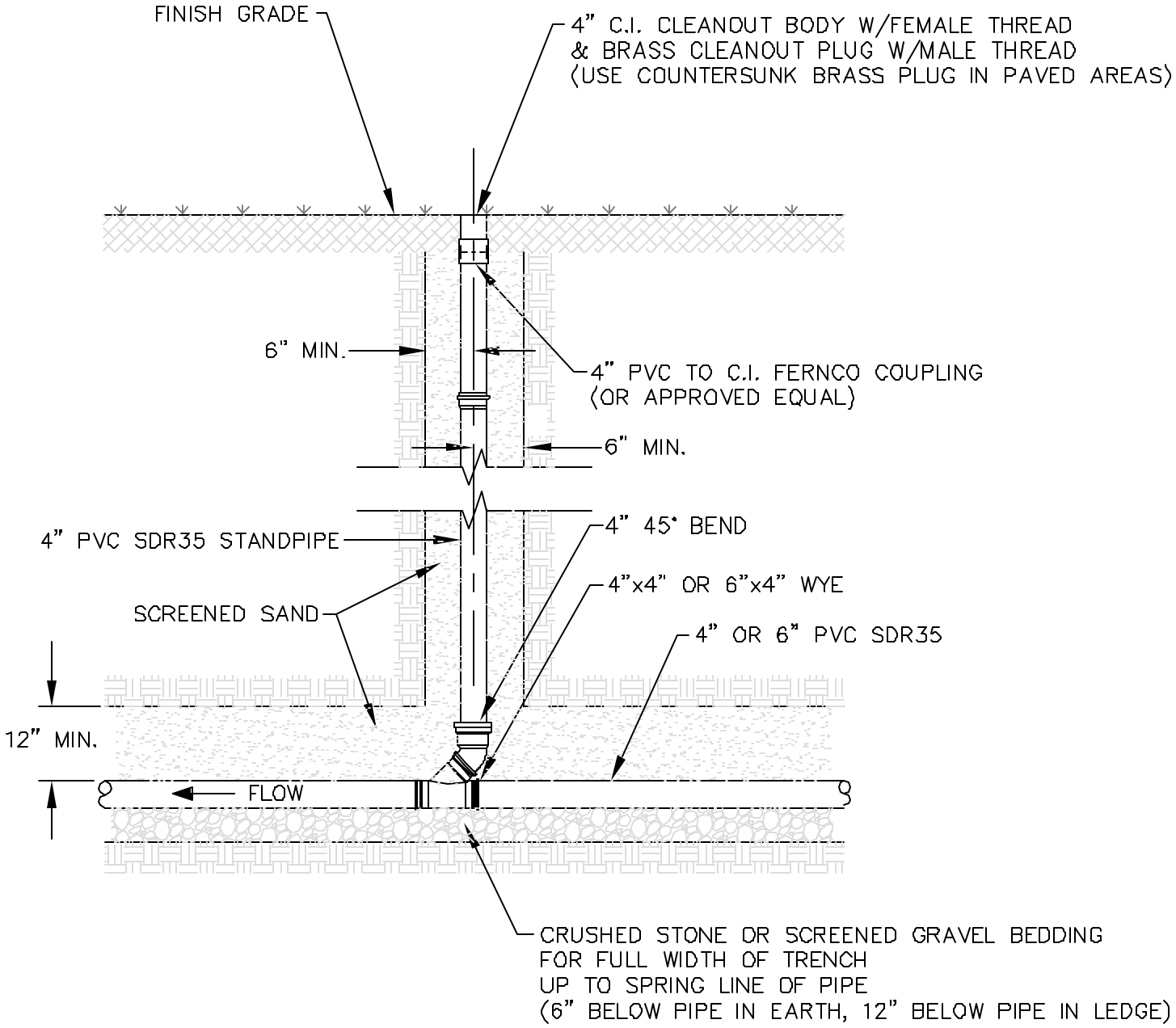

TYPICAL SEWER SERVICE CLEANOUT

S:\DWG\DETAILS\601-3 CLEANOUT.DWG

NOT TO SCALE

FIGURE 601-3

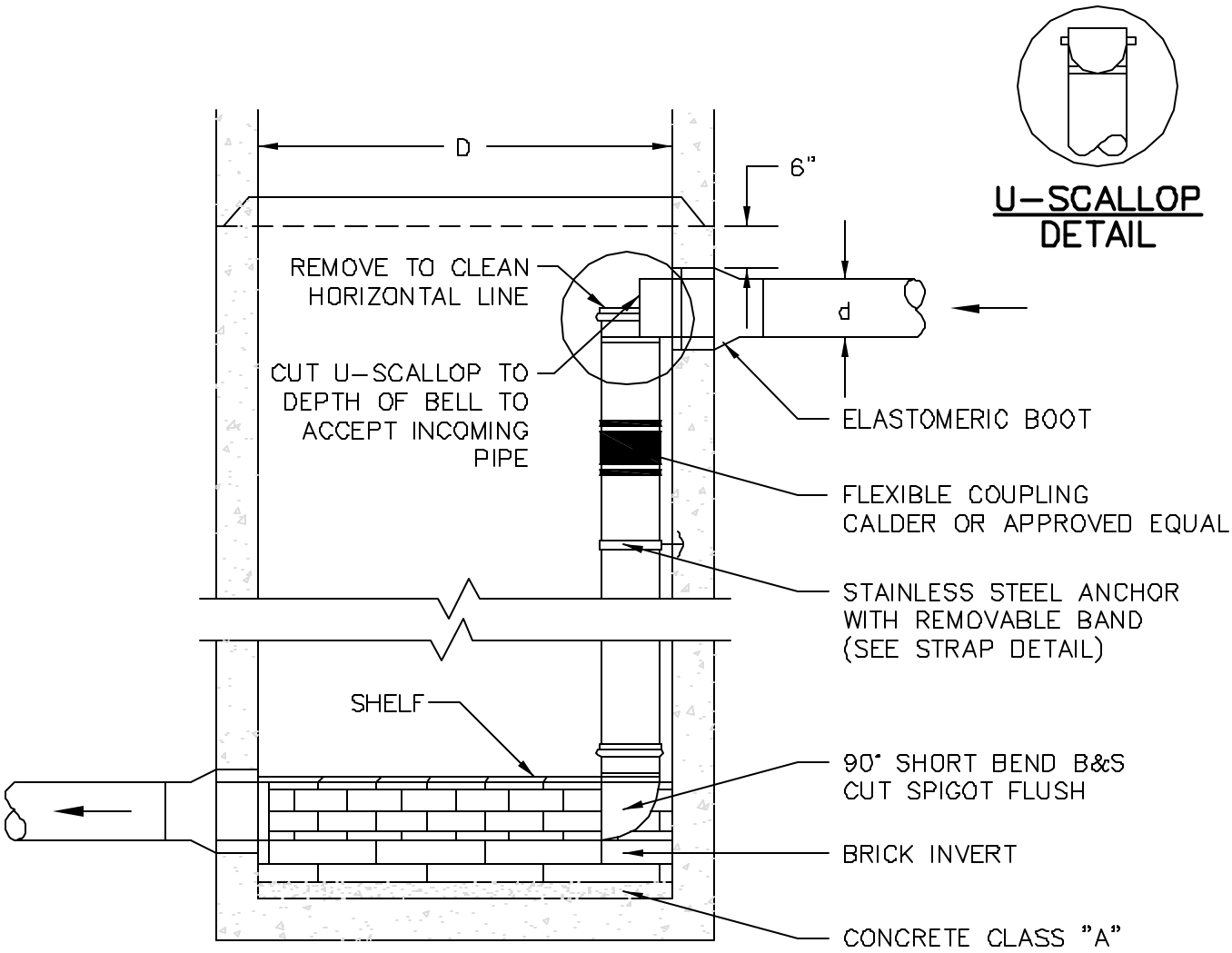

# OF DROPS	d	D
1	8"	4'
2	8" OR 10"	5'
1	12"	5'
1	15"	5'
1	18"	6'
1	24"	6'

INSIDE DROP CONNECTION FOR PVC PIPE

S:\DWG\DETAILS\601-4 DROPCONN.DWG

NOT TO SCALE

FIGURE 601-4

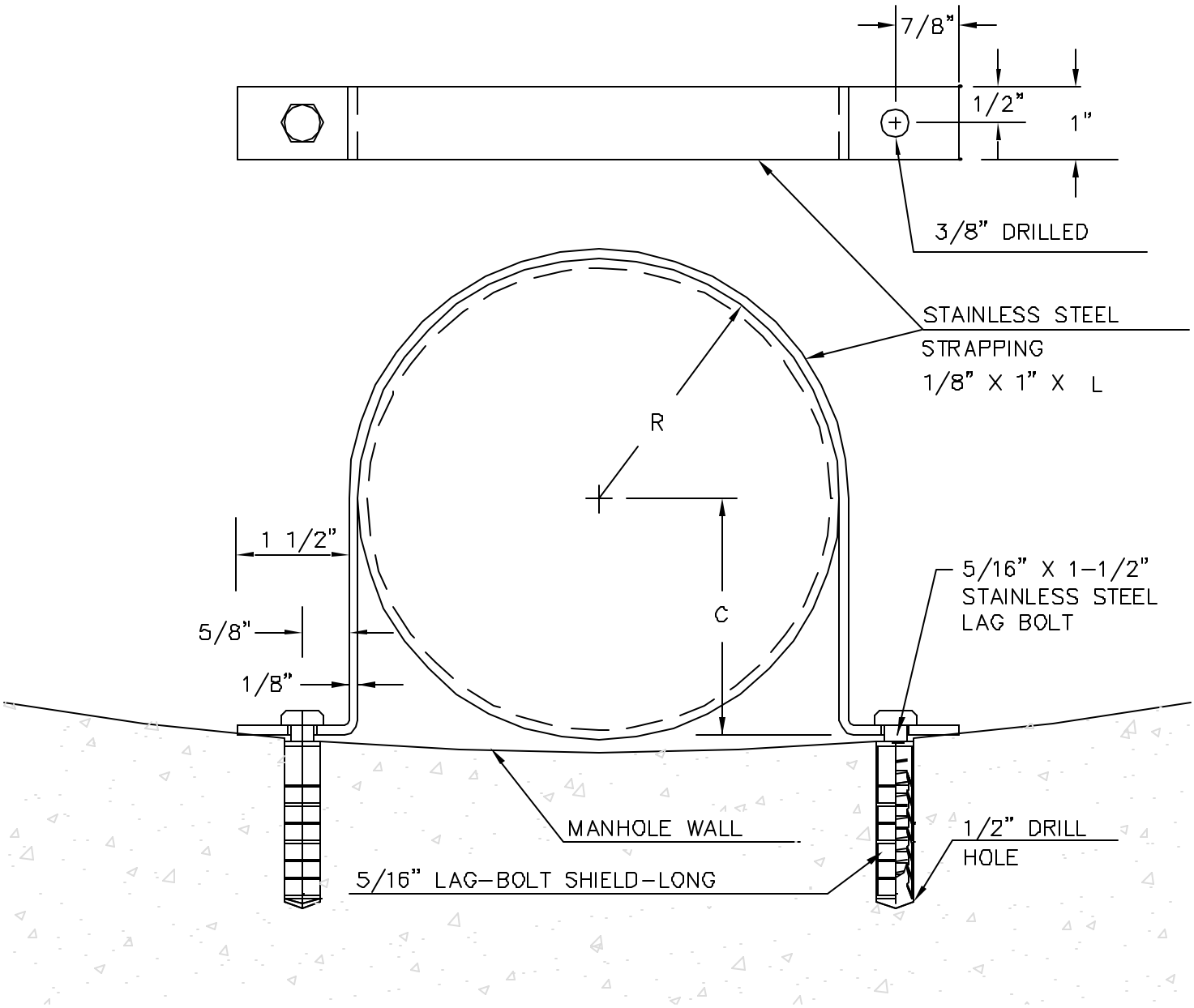

PIPE SIZE	L	R	C
4"	14.176"	2.125"	2.063"
6"	19.638"	3.188"	3.125"
8"	25.102"	4.250"	4.188"
10"	30.565"	5.313"	5.250"
12"	36.028"	6.375"	6.313"

STRAP DETAIL FOR INSIDE DROP CONNECTION

S:\DWG\DETAILS\601-5 ID-STRAP.DWG

NOT TO SCALE

FIGURE 601-5

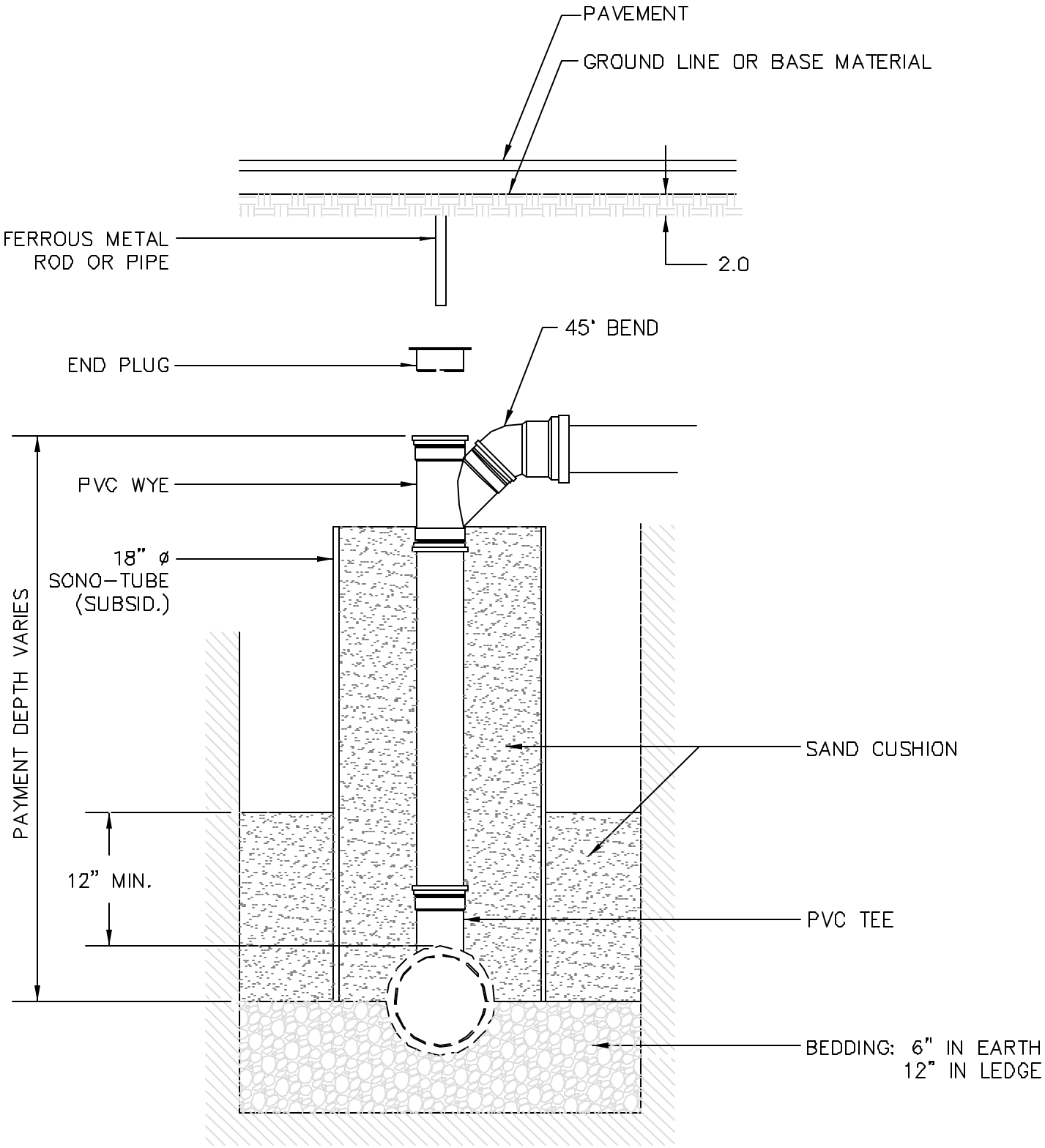

NOTE: FORMWORK OR SONO-TUBE SHALL BE LEFT IN PLACE.

SERVICE CHIMNEY FOR PVC PIPE

S:\DWG\DETAILS\601-6 CHIMNEY.DWG

NOT TO SCALE

FIGURE 601-6

SECTION 602 -- SANITARY SEWER MANHOLES

Description

1.1 This work shall consist of furnishing and installing sanitary sewer manholes; furnishing and placing manhole covers, all as shown on the plans or as ordered.

1.1.1 Sanitary sewer manholes shall conform to the requirements of the latest edition of the New Hampshire Department of Environmental Services -- Water Division "Standards of Design and Construction for Sewerage and Wastewater Treatment Facilities" and as set forth in these specifications.

Materials

2.1 General.

2.1.1 Sanitary sewer manholes shall be precast concrete.

2.1.1.1 Cone and transition sections shall be eccentric in shape.

2.1.1.2 Base sections shall be monolithic construction to a point no less than 6 inches above the crown of the incoming pipe.

2.1.1.3 When manhole depth is less than 6 feet, a reinforced concrete slab cover may be used in lieu of a cone section. Such slab shall have an eccentric entrance opening and be capable of supporting H-20 loads.

2.1.1.4 Horizontal joints for all precast sections shall be tongue and groove.

2.1.1.5 The name of the manufacturer and the date of manufacture shall be clearly marked on each precast section.

2.1.1.6 Two coats of a bituminous waterproofing material shall be applied to the exterior surfaces by brush or spray and in accordance with the manufacturer's recommendations. The bituminous waterproofing material shall be Minwax Fibrous Brush Coat as manufactured by the Tremco Manufacturing Company, Bituminous Black Solution as manufactured by the Koppers Company, Inc., or an approved equal.

2.1.1.7 Manhole structures shall have a life in excess of 25 years.

2.2 Reinforcing steel shall conform to the requirements of 544.

2.3 Precast concrete sections shall conform to ASTM C478. The concrete shall be Class AA, meeting the requirements of 520.

2.4 Clay brick shall conform to the requirements of ASTM C32 for Grade SS, hard brick.

2.5 Concrete masonry units shall conform to the requirements of ASTM C 139 and shall have a minimum compressive strength of 3000 pounds per square inch when tested by the method in AASHTO T 140.

2.6 Cement mortar shall conform to 707.

2.7 Non-shrinking mortar shall be Hallemite, Waterplug, Embecco or an approved equal.

2.8 The castings shall be of even-grained cast iron, smooth and free from scale, lumps, blisters, sand holes and defects. Castings shall be equal to class 30, conforming to ASTM A48.

2.9 The word "SEWER" in three inch letters shall be plainly cast in the center of each manhole cover.

2.10 Joints shall be sealed watertight with an approved rubber on bitumastic sealant conforming to ASTM C32.

2.11 Bedding and backfill material shall conform to the requirements of 209.

Construction Requirements

3.1 Excavation shall conform to the requirements of 206.

3.2 Bedding and backfill procedures shall conform to the requirements of 209.

3.3 Precast concrete sections shall be at least ten (10) days old when delivered to the construction site.

3.4 Sanitary manholes shall have a brick paved inverts and shelf constructed to conform to the size of pipe and flow. At changes in direction, the inverts shall be laid out in curves of the longest radius possible tangent to the center line of the sewer pipes. Shelves shall be constructed to the elevation of the highest pipe crown and sloped to drain towards the flow through the channel. Inverts and shelves shall be placed after testing.

3.4.1 All lifting holes and joints shall be filled with non-shrinking mortar and pointed as directed.

3.5 Concrete construction shall conform to the requirements for structural concrete. Masonry shall conform to the requirements for the respective type. Masonry shall fit neatly and tightly around the pipe.

3.6 The Contractor shall provide for the temporary diversion of water in order to permit the installation of sanitary sewer manholes in a reasonably dry trench, unless otherwise permitted by the Engineer.

3.7 Prior to installation and adjustment of covers and frames, the top of the sanitary sewer manholes shall be temporarily covered to prevent accidental entry.

3.8 In accordance with the provisions of ASSHTO M105, 17.2, the following are the "other matters of workmanship and finish" required: Frames and covers shall be matched before being incorporated into the work. Covers shall make full and even bearing on the underlying surface to fit into the frames without rocking.

3.9 Structures within the limits of bituminous concrete pavement shall be temporarily set at the elevation of the bottom of the binder course or as ordered. Just prior to the placement of the wearing course, they shall be set at their final grade. Backfill necessary around such structures after the base course has been completed shall be made with Class "A" concrete unless otherwise ordered.

3.9.1 Brick or precast concrete rings shall be used to adjust manhole frames to grade. The maximum allowable adjustment shall be 12 inches.

3.9.2 Frames shall be set on a full bed of mortar to ensure a watertight fit. They shall be set true to grade and fully aligned with the masonry opening.

3.9.3 A mortar fillet extending to the outer edge of the masonry and a minimum of 1 inch thick shall be constructed around the frame in such a manner as to shed water.

3.10 Sanitary sewer manholes specified to be adjusted shall be built up to the required elevation according to the requirements of 3.8.

3.11 When connections to existing sanitary sewer manholes are required, the openings shall be cored and the pipe to manhole joints shall be neatly and tightly sealed with a Kor- N-Seal Joint Sleeve or approved equal. Inverts shall be modified to meet the requirements of 3.5.

3.12 Pipe to manhole joints shall be as follows:

a) Elastomeric, rubber sleeve with watertight joints at the manhole opening and pipe surface;
b) Cast into the wall or secured with stainless steel clamps;
c) Elastomeric sealing ring cast in the manhole opening with seal formed on the surface of the pipe by compression of the ring; and
d) Non-shrink grouted joints where watertight bonding to the manhole and pipe can be obtained.

3.13 Upon completion, each sanitary sewer manhole shall be cleaned of silt, debris or other matter of any kind and shall be kept clean until final acceptance of the work.

Leakage Testing

4.1 General.

4.1.1. Manholes shall be tested for leakage using either a water infiltration test, exfiltration test or a vacuum test.

4.1.2 Whereas the tests are intended to verify watertightness of the precast concrete sections and joints, no adjustment to the leakage allowance will be made for any other cause.

4.1.3 The leakage test shall be performed prior to constructing the invert and shelf and before filling and pointing the interior horizontal joints.

4.1.4 The Contractor shall take all steps necessary to insure that the water table is below the bottom of the manhole throughout the test, except as provided in 4.4.

4.1.5 All pipes and other openings into the manhole shall be suitably plugged. The pipes shall be adequately braced to prevent blowouts.

4.1.6 Leakage tests may be performed either before or after backfilling around the manhole. It is recommended that the tests be performed prior to backfilling. If the Contractor elects to test after backfilling, he shall do so at his own risk.

4.2 Water Test.

4.2.1 Prior to performing the water test, all lifting holes and exterior joints shall be filled with non-shrinking mortar and pointed. The manhole shall then be filled to the top of the cone section with water.

4.2.2 Where the excavation has been backfilled and the exterior surface of the manhole cannot be observed, the test shall be continued as follows:

4.2.2.1 Prior to starting the test, the Contractor may be allowed to let the water stand in the manhole for a period of time to allow for absorption. At the end of that time, the water level shall be brought back to the top of the cone section and the measurement period begun.

4.2.2.2 The water shall be allowed to stand in the manhole for no less than eight hours. At the end of that time, the volume of water lost to leakage shall be computed and extrapolated to a 24 hour rate.

4.2.2.3 The amount of leakage shall be determined on the basis of rate and depth and shall not exceed 1 gallon per vertical foot over a 24 hour period.

4.2.2.4 If the minimum leakage allowable cannot be met and the leakage does not exceed 3 gallons per vertical foot over a 24 hour period, the Contractor shall be allowed to make necessary repairs as approved by the Engineer. The manhole shall be re-tested.

4.2.3 The following conditions shall be cause for rejection of the manhole:

(a) Failure to meet the minimum requirements after a repaired manholes has been re-tested.
(b) Leakage exceeding 3 gallons per vertical foot over a 24 hour period as the result of the initial test.

4.2.3.1 If a manhole is rejected due to the failure of the leakage test, it shall be the Contractor's responsibility to either reconstruct or replace it as directed by the Engineer.

4.2.4 Upon completion of a successful water test, the interior joints shall be filled and pointed.

4.3 Vacuum Test.

4.3.1 Where the excavation has not been backfilled, the filling and pointing of exterior joints shall not be necessary prior to performing this test.

4.3.2 The vacuum test shall be conducted as follows:

4.3.2.1 The compression band shall be inflated to effect a seal between the vacuum base and the top of the manhole. The vacuum pump shall then be connected to the outlet port with the valve open and a vacuum of 10" Hg (20" of Hg absolute) drawn. The valve shall then be closed.

4.3.2.2 The following test criteria shall apply to 4 foot and 5 foot diameter manholes. The minimum acceptable test hold time for a 1” Hg pressure drop to 9” Hg shall be:

(a) Not less than 2 minutes for manholes less than 10 feet deep;
(b) Not less than 2-1/2 minutes for manholes 10-15 feet deep; and,
(c) Not less than 3 minutes for manholes 15-25 feet deep.

4.3.2.3 If the pressure drop exceeds the acceptable limits the Contractor shall be allowed to make necessary repairs, as approved by the Engineer. The manhole shall then be re-tested.

4.3.2.4 If the manhole fails to meet the minimum requirements of the vacuum test when re-tested, it may be water tested as outlined in 4.2.

4.3.3 Manholes shall be subject to rejection as outlined in 4.2.3.

4.3.4 Upon completion of a successful vacuum test, the interior and exterior joints shall be filled and pointed.

4.4 Infiltration Test.

4.4.1 If the water table is above the highest joint in the manhole, the infiltration test may be used to evaluate its watertightness.

4.4.1.1 The Engineer will check the interior of the manhole for leakage, and if in his opinion no serious leakage is observed, the watertightness of the manhole may be considered satisfactory.

4.4.1.2 If in the opinion of the Engineer, there is serious leakage the Contractor shall be required to perform the test in accordance with 4.3.

Method of Measurement

5.1 Sanitary sewer manholes will be measured by the vertical foot to the nearest 0.1 of a foot, from the bottom of the metal frame to the top of the base.

5.2 Connecting existing sanitary sewer manholes will be measured by the number of units connected.

5.3 Manhole covers will be measured by the number of units installed. A cover and frame will be a unit.

5.4 Adjusting covers and frames which have been set by others will be measured by the number of units adjusted.

Basis of Payment

6.1 The accepted quantities of sanitary sewer manholes, of the diameter specified, will be paid for at the contract unit price per vertical foot complete in place. This price shall constitute full compensation for excavation (except rock), backfill, bedding and furnishing all materials, tools, equipment, labor and incidentals needed to complete the work including those necessary to test the manholes.

6.1.1 All rock structure excavation and any excavation of unsuitable material ordered below the specified grade will be paid for as provided in 206.

6.1.2 Granular backfill material necessary for the replacement of unsuitable material removed below the specified grade will be paid as provided in 209. Granular backfill necessary for the replacement of over-excavated ledge will be subsidiary.

6.1.3 No extra allowance will be made for structures adjusted in accordance with 3.5.9.

6.2 The accepted quantities of connecting existing manholes will be paid for at the contract unit price per each existing manhole connected complete in place which price shall constitute full compensation for furnishing all materials, tools, equipment, labor and incidentals needed to complete the work, including those necessary to test the connections.

6.3 The accepted quantities of manhole covers and frames or of adjusting covers and frames which have been set by others, will be paid for at the contract unit price per each, complete in place, which price shall constitute full compensation for excavation, backfill and furnishing all materials, tools, equipment, labor and incidentals needed to complete the work.

6.3.1 No payment will be made for reconstructing portions of the above manholes which are unnecessarily disturbed.

6.4 Temporary diversion of water including trenching or pumping directly from the trench shall be subsidiary to the sanitary sewer manhole installation. When well points or other specific dewatering devices are requested or ordered, they will be paid as shown or as extra work.

6.5 Temporary diversion of sewer flows shall be subsidiary to the sanitary sewer manhole installation.

Sanitary Sewer Manhole Items to Read:
"...Including Excavation, Bedding & Backfill"

Pay Items and Units:

602.3_	Sanitary Sewer Manholes,__ Foot Diameter	Vertical Foot
602.5	Connecting Existing Sanitary Sewer Manholes	Each
602.55	Adjusting Manhole Covers & Frames set by others	Each
602.6	Sewer Manhole Covers and Frames	Each

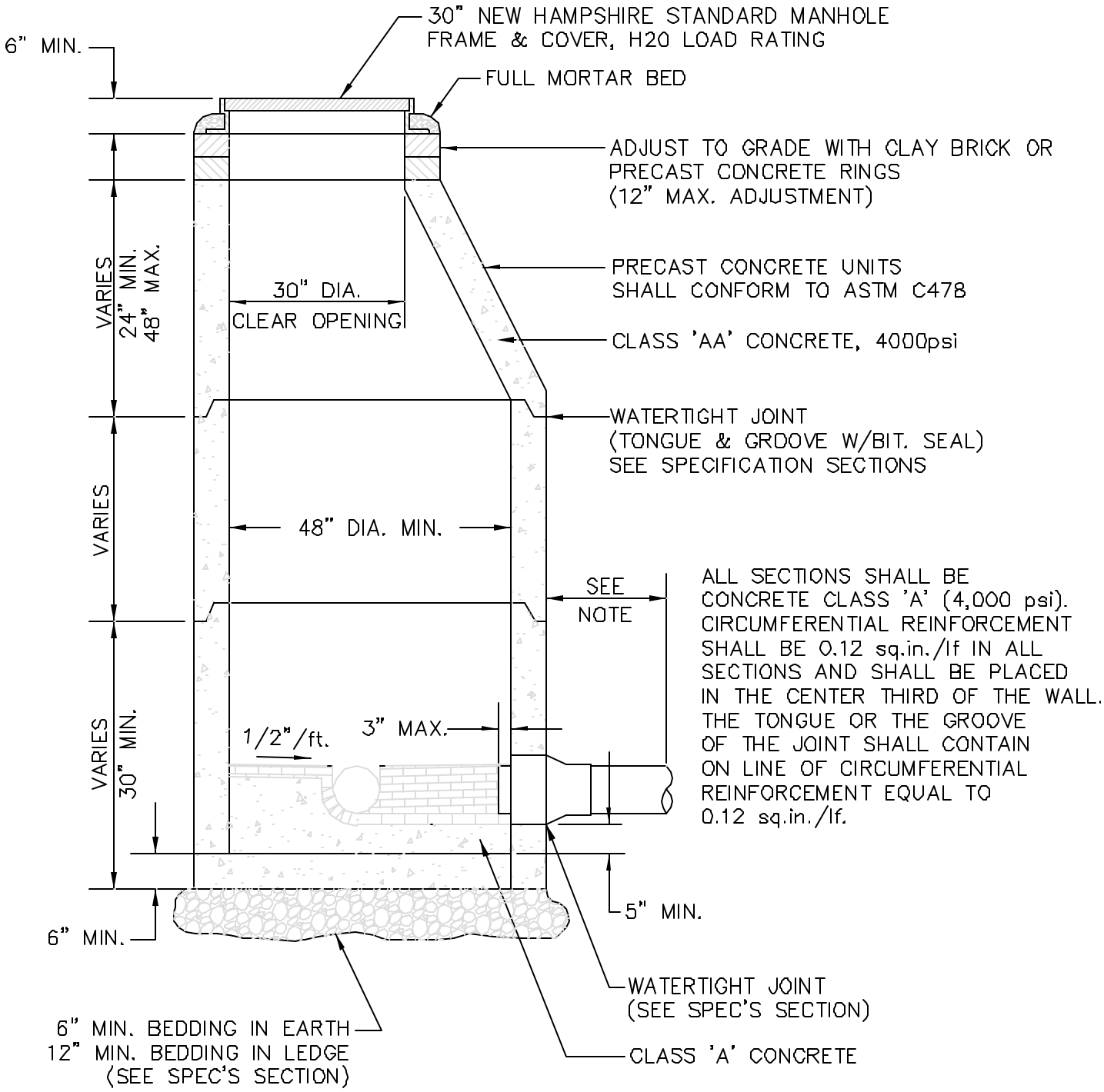

TYPE OF PIPE	SIZE	MAX. DIST. TO FIRST JOINT
R.C.P./C.I.	ALL	48"
C.I.P.	ALL	48"
P.V.C.	>15"	48"
V.C.P.	0–12"	18"
V.C.P.	>12"	36"

PRE–CAST REINFORCED SANITARY SEWER MANHOLE

S:\DWG\DETAILS\602–1 SMHDETL.DWG

NOT TO SCALE

FIGURE 602–1

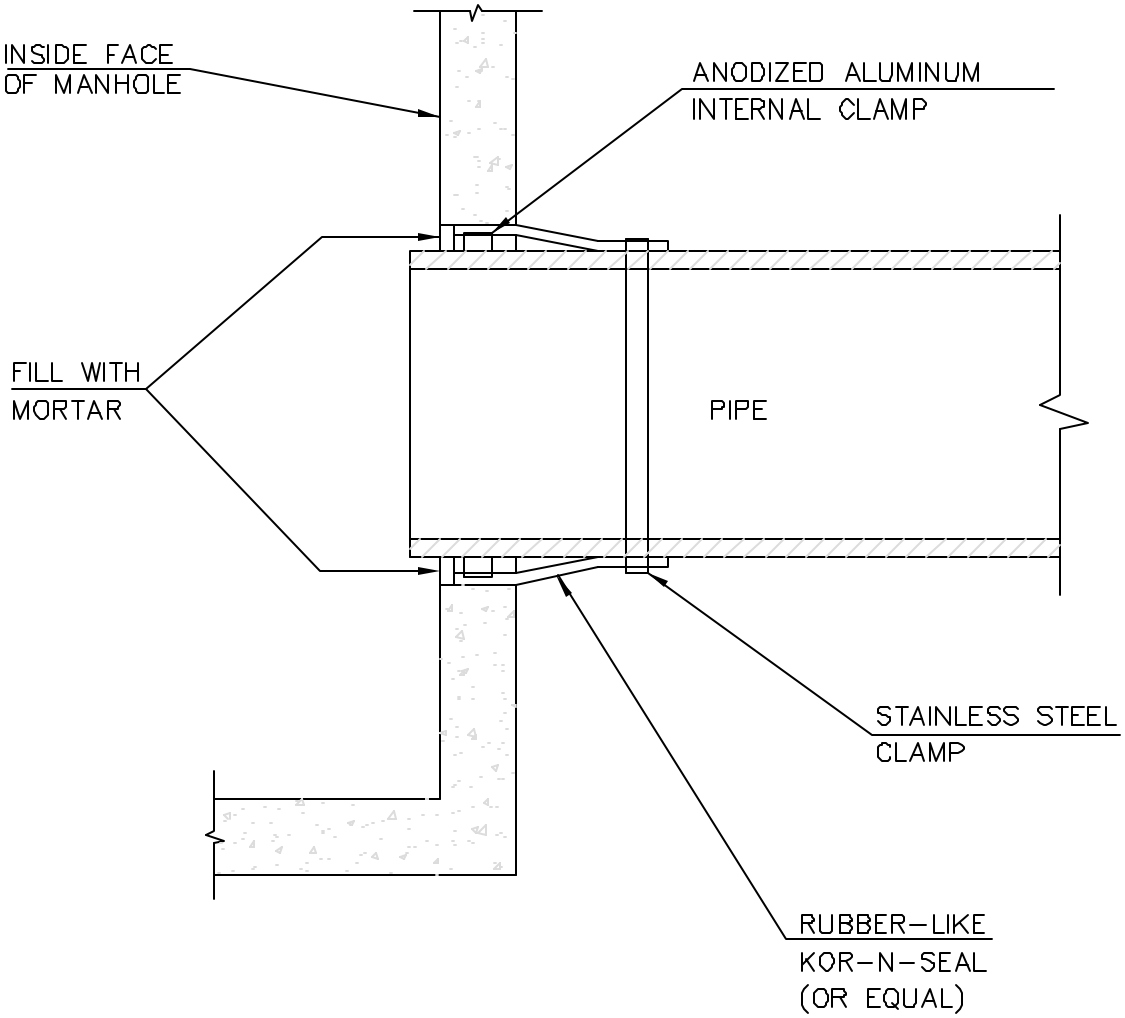

MANHOLE JOINT SLEEVE

S:\DWG\DETAILS\602-2 mhjointseal.dwg

NOT TO SCALE

FIG. 602-2

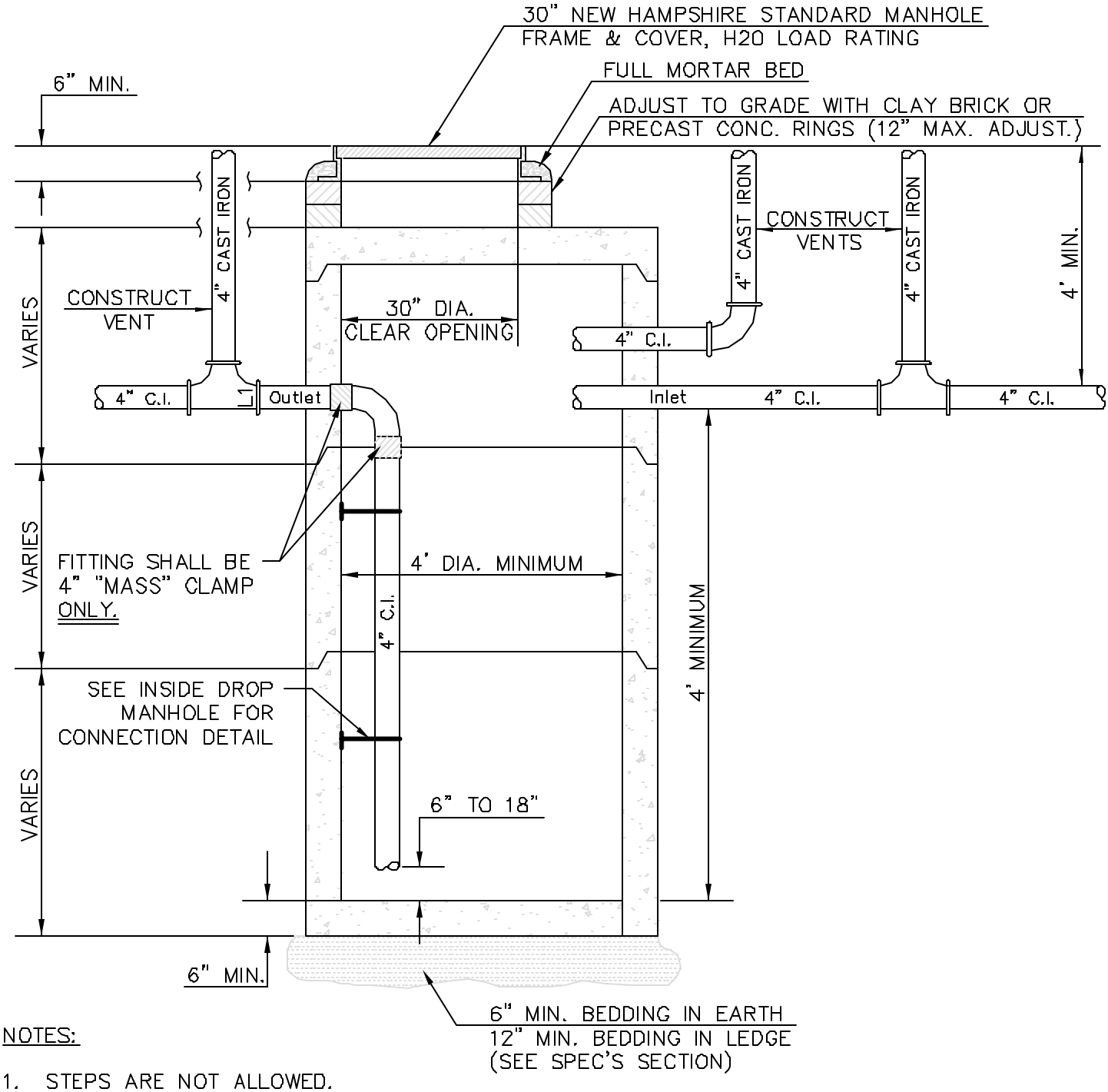

NOTES:

1. STEPS ARE NOT ALLOWED.

2. ALL SECTIONS SHALL BE CONCRETE CLASS AA (4,000 PSI) CIRCUMFERENTIAL REINFORCEMENT SHALL BE 0.12 SQ. IN. PER L.F. IN ALL SECTIONS AND SHALL BE PLACED IN THE CENTER OF THE WALL.

3. THE TONGUE OR THE GROOVE OF THE JOINT SHALL CONTAIN ONE LINE OF CIRCUMFERENTIAL REINFORCEMENT EQUAL TO 0.12 SQ. IN. PER L.F.

4. ALL CONCRETE SHALL BE CLASS AA (4,000 PSI).

5. WATERTIGHT JOINT (TONGUE & GROOVE W/ BIT. SEAL) SEE SPECIFICATION SECTIONS.

6. PRECAST CONCRETE UNITS SHALL CONFORM TO ASTM C478.

PRECAST REINFORCED CONCRETE GAS TRAP

S:\DWG\DETAILS\602-3 GAS-TRAP.DWG

NOT TO SCALE

FIGURE 602-3

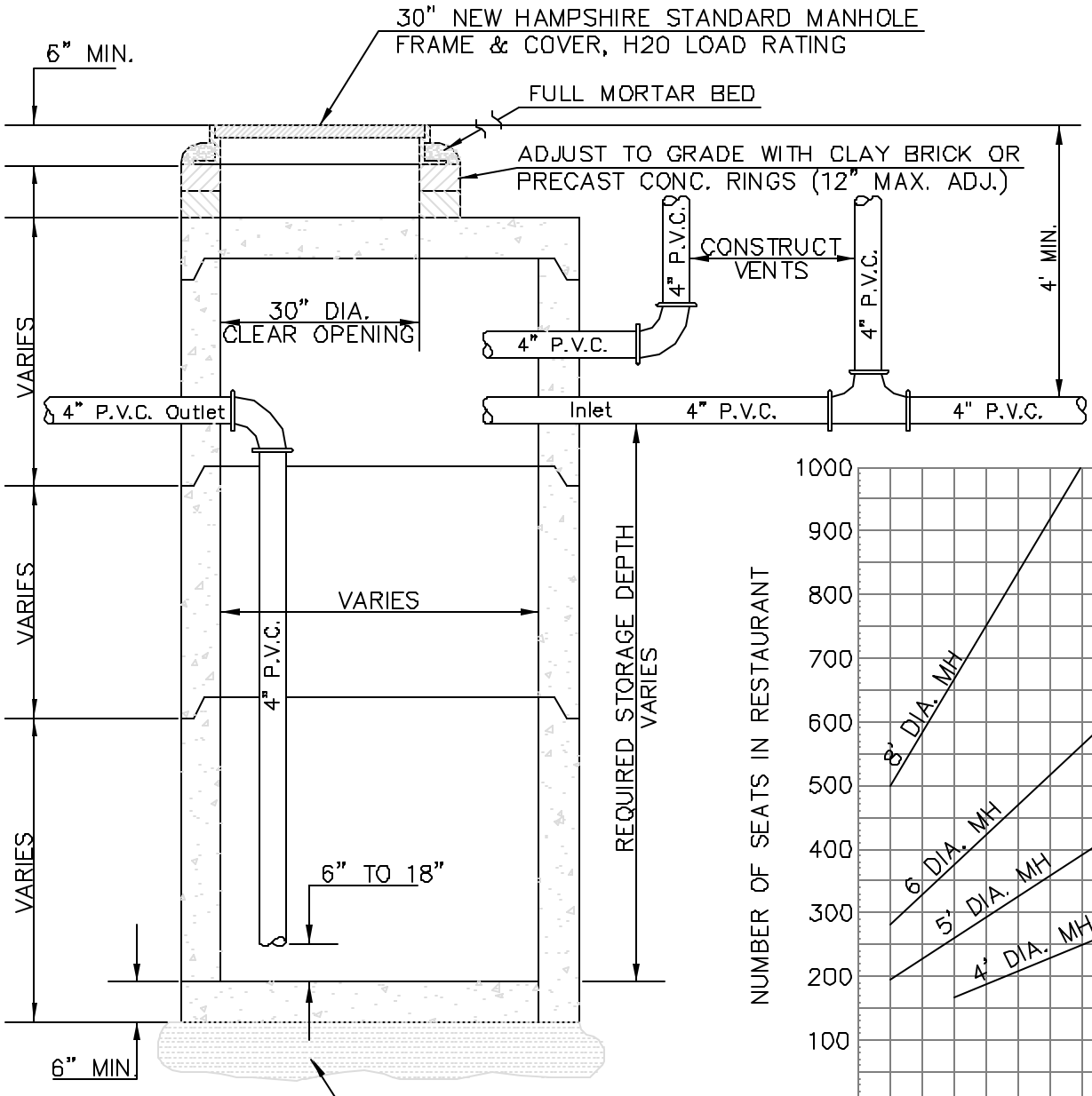

NOTES:

1. STEPS ARE NOT ALLOWED.

2. ALL SECTIONS SHALL BE CONCRETE CLASS AA (4,000 PSI) CIRCUMFERENTIAL REINFORCEMENT SHALL BE 0.12 SQ. IN. PER L.F. IN ALL SECTIONS AND SHALL BE PLACED IN THE CENTER OF THE WALL.

3. THE TONGUE OR THE GROOVE OF THE JOINT SHALL CONTAIN ONE LINE OF CIRCUMFERENTIAL REINFORCEMENT EQUAL TO 0.12 SQ. IN. PER L.F.

4. ALL CONCRETE SHALL BE CLASS AA (4,000 PSI).

5. WATERTIGHT JOINT (TONGUE & GROOVE W/ BIT. SEAL) SEE SPECIFICATION SECTIONS.

6. PRECAST CONCRETE UNITS SHALL CONFORM TO ASTM C478

7. ALL OPENINGS TO STRUCTURE SHALL BE CORED, AND PIPE TO MANHOLE JOINT SHALL BE NEATLY AND TIGHTLY SEALED WITH A KOR-N-SEAL JOINT SLEEVE OR APPROVED EQUAL.

PRECAST REINFORCED CONCRETE GREASE TRAP

S:\DWG\DETAILS\602-4 GRS-TRAP.DWG

NOT TO SCALE

FIGURE 602-4

SECTION 603 -- STORM DRAINS

Description

1.1 This work shall consist of furnishing and installing, or removing and relaying drain pipes and pipe end sections at the locations shown or ordered, including the necessary joints, fittings, and connections as required.

Materials

2.1 Reinforced Concrete Pipe, Circular.

2.1.1 This pipe shall conform to the requirements of AASHTO M 170, except as follows: Wall A thickness will be allowed in Class III pipe only. When the plans call for reinforced concrete pipe capable of withstanding an ultimate load greater than 3750 D, the design requirements of Class V shall be met with further provision that the pipe will withstand the ultimate D-load of a 4000 D.

2.1.2 Basis of acceptance of concrete pipe shall conform to AASHTO M 170, Section 5.1.1. Test requirements shall be as provided in Section 10.3.1 and 10.5 with the further provision that the pipe will withstand an additional ten percent of the D-load specified or brought to destruction. Permissible variation in pipe tolerances shall conform to AASHTO M 170, Section 11.

Table 1 - Minimum Strength Requirements

D-Load to produce the ultimate load = Class	D-Load to produce a 0.01 inch crack	AASHTO designation Class
1500 D	100	II
2000 D	1350	III
3000 D	2000	IV
3750 D	3000	V
4000 D	----	---

2.1.3 Workmanship and finish shall conform to AASHTO M 170, Section 12. Pipe shall be subject to rejection on account of failure to conform to any of the specification requirements of AASHTO M 170, Section 15. Individual sections of pipe may be rejected because of the following reasons:

(a) Fracture or cracks passing through the wall, except for a single end crack that does not exceed the depth of a joint.
(b) Defects that indicate imperfect proportioning, mixing, and molding.
(c) Surface defects indicating honey-combed or open texture.

(d) Damaged or cracked ends where such damage would prevent making a satisfactory joint.

(e) Any continuous crack having a surface width of 0.01 inch or more and extending for a length of 12 inches or more, regardless of position in the wall of the pipe.

(f) The exposure of any steel in the barrel or the outside of the pipe indicating the displacement of reinforcement. Steel exposed at the ends will not be cause for rejection if a satisfactory joint can be made.

2.1.4 Markings on pipe shall conform to AASHTO M 170, Section 16 with the following information clearly marked on each section of pipe.

(a) The pipe class and specification designation
(b) The date of manufacture
(c) The name or trademark of the manufacturer
(d) Identification of plant

2.1.5 Concrete pipe shall be joined by using flexible water tight gaskets conforming to AASHTO M 198.

2.2 High Density Polyethylene (HDP) Pipe

2.2.1 Corrugated High Density Polyethylene (HDP) pipe shall conform to the requirements of AASHTO M 294, Type S, Or Type C as specified on the plans, and ASTM D2321 -Standard Practice for Underground Installation of Thermoplastic Pipe for Sewers and Other Gravity Flow Applications.

2.2.2 Basis of acceptance and test requirements of HDP pipe shall conform to AASHTO M 294. A manufacturer's certificate of compliance, as required by 106.04, and certified laboratory test results for each shipment shall be provided. The certified test results shall also include pipe lot number, date produced, date test was completed, and a signature of the lab supervisor. For required frequency of laboratory testing see section 700 of the New Hampshire Department of Transportation Construction Manual.

2.2.4 Only soil tight pipe fittings supplied or recommended by the manufacturer shall be used.

2.2.5 Corrugated HDP pipe shall have an annular corrugated exterior and smooth inner wall.

2.2.6 Corrugated pipe, appurtenances, and all couplings shall be high density polyethylene of the size and type as shown on the Drawings, all manufactured by the same company and shall meet or exceed the following specifications: AASHTO M-294; ASTM F667 and ASTM D2321.

2.2.7 Backfilling over the pipe shall be to the pipe manufacturer's specifications. Cover shall be compacted to at least 92 percent of its maximum dry density as determined by ASTM Test D1557, Method D.

2.2.8 Split ring couplings or equal shall be utilized, no spring-on couplings will be allowed. One-half-inch wide self adhesive neoprene foam strips shall be applied on each inner rib of the coupling prior to installation on pipes to minimize any water leakage out of the joints.

2.2.9 Split ring couplings shall be connected with a minimum of six-gauge aluminum ties.

2.2.10 Bedding and backfill material shall conform to the requirements of 209.

2.3 End Sections and Headwalls.

2.3.1 End sections will be allowed at the discretion of the engineer.

2.3.2 Headwalls shall be installed per Figs. 603-1 thru 603-7 or as otherwise ordered.

2.3.3 Concrete for Headwalls shall conform to Section 520.

2.3.4 Child protective grates shall be provided for all headwalls per Fig. 603-8 or as ordered by the Engineer.

Construction Requirements

3.1 General.

3.1.1 All pipe shall be examined before laying and no piece shall be installed which is found to be defective.

3.1.2 Excavation for pipe construction shall conform to the requirements of 206.

3.1.3 Steam-cured or water-cured reinforced concrete pipe may be delivered to the project after 7 days from date of manufacture.

3.1.4 The Contractor shall provide for the temporary diversion of water in order to permit the installation of the pipe in a reasonably dry trench unless otherwise permitted.

3.1.5 Figures 603-9 to 12 have been made a part of these specifications for clarification.

3.1.6 Where soft or other unsuitable material is encountered, all of such unsuitable material, for the depth and width specified, shall be removed as shown in Figure 603-12.

3.1.7 Where bedrock or other incompressible material is encountered, it shall be removed as shown in Figure 603-11.

3.1.8 Granular backfill or other approved material shall be used to backfill the spaces left by the excavation of material removed in accordance with 3.1.4 and 3.1.5. The material shall be uniformly compacted.

3.1.9 The width of trenches shall be held to a minimum consistent with the space required to permit satisfactory jointing and thorough tamping of the bedding material under and around the pipe. Trenching below the top of the pipe shall as shown in figure 603-10. The width of the trench above the pipe may be at the Contractor's option as shown in Figure 603-10.

3.1.10 The pipe shall be placed at the designated location on a prepared foundation so that the flow line of the pipe will conform to the required grade.

3.1.11 Where the top of the pipe would lie above the natural ground, sufficient compacted fill shall be constructed at pipe locations to insure that the pipe is placed in a trench equal in depth to at least the height of the pipe. The fill shall be constructed on each side of the pipe for a distance equal to at least 5 times the diameter of the pipe. Refer to Figure 603-9

3.1.12 Bedding and backfill shall conform to the requirements of 209.

3.1.13 Corrugated HDP pipe handling, storage, and installation procedures will be supplied for each manufacturer with the first shipment to the project. Prior to any installation a manufacturer's representative will review these procedures with the installation Contractor and the Engineer. Installation shall conform to ASTM D 2321 or the manufacturer's procedures whichever is more stringent.

3.1.14 Unless deemed unsatisfactory, the backfill material above the pipe spring line shall be in-situ. If the in-situ material is found to be unacceptable as backfill, acceptable material with similar frost susceptible characteristics shall be used.

3.1.15 If any defective pipe is discovered after it has been installed, it shall be removed and replaced with a sound pipe in a satisfactory manner at no additional cost to the Owner.

3.1.16 Precautions shall be taken to prevent flotation of the pipe in the trench.

3.2 Laying and Joining Pipe.

3.2.1 Proper facilities shall be provided for lowering the sections of pipe into the trench. Each section shall be securely attached to the adjoining section by the approved method for the type of joint used.

3.2.2 All pipe laying shall start at the lowest point of each run and shall be laid with the bell end upgrade.

3.2.3 Joints shall be made in accordance with the manufacturer's recommendations to form a watertight seal.

3.2.4 The pipe ends shall be thoroughly cleaned before the joint is made. When it is necessary to shorten a length of pipe, the pipe shall be sawed neatly using a masonry saw. The method of joining pipe sections shall be such that the ends are fully entered and the inner surfaces are reasonably flush and even.

3.2.5 Joints between dissimilar pipes shall be made in accordance with the recommendations of the pipe manufacturer.

3.2.6 Pipes under construction shall not be used to carry ground water from the trenches, except as may be approved by the Engineer.

3.2.7 The CONTRACTOR shall place an adequate protecting cover of earth or other approved material over the pipe before allowing equipment or traffic to pass over it.

3.3 Workmanship.

3.3.1 Any pipe which is not true to alignment and grade or which shows any undue settlement after laying or is damaged shall be removed and relaid or replaced without extra compensation.

3.3.2 Deflection for Corrugated HDP pipe shall not exceed 5 percent in the first 90 days. When deflection verification is considered necessary by the Engineer, all necessary manpower and equipment, including mandrels for such tests, will be provided by the Contractor and shall be performed at least 30 days after installation. When mandrel testing is required the mandrel diameter shall be the Specified Pipe Diameter minus Inside Diameter Tolerance (1.5% x Specified Diameter Pipe; Maximum Allowable is 0.5”) minus allowable deflection (5% x Specified Pipe Diameter). Any section of pipe not passing the mandrel shall be uncovered at no additional cost to the Owner and the bedding and backfill replaced to prevent excessive deflection. Repaired pipe shall be retested.

3.4 Removal of Pipe for Relaying.

3.4.1 Pipes shall be removed in accordance with 202.2 and 107.11.

3.4.2 Any pipe damaged shall be replaced with like material.

3.4.3 Any additional pipe needed shall be of like material.

Method of Measurement

4.1 Pipe will be measured by the linear foot to the nearest 0.1 of a foot according to size, class and depth. Measurement will be made between the ends of the pipe along the central axis as installed. In the case of twin pipes and other multiple pipe structures, each barrel will be measured separately.

4.1.1 The depth for measurement shall be determined by the vertical distance to the nearest 0.1 foot, between the original ground and the flow line of the pipe as installed.

4.2 Headwalls will be measured by the number of units installed.

Basis of Payment

5.1 The accepted quantities of pipe will be paid for at the contract unit price per linear foot of the size, type, and depth specified complete in place, with the following stipulations:

5.1.1 All rock structure excavation, and any excavation of unsuitable material required below the specified grade, will be paid as provided for in 206.

5.1.2 When the depth of excavation for a pipe is increased more than 1 foot by lowering the grade, additional excavation will be paid as provided in 206.

5.1.3 Granular backfill material necessary for the replacement of unsuitable material removed below the specified grade, will be paid as provided in 209.

5.2 Headwalls of the kind and size specified will be paid for at the contract unit price each complete in place.

5.3 The cost of furnishing and installing additional pipe for laying or relaying pipe, required through no fault of the Contractor, will be paid as provided in Extra Work (109.04) unless a bid item therefore is included in the contract.

5.4 Temporary diversion of water including trenching or pumping directly from the trench or sumps shall be subsidiary to the pipe installation. When well points or other specific de-watering devices are required or ordered, they will be paid as shown or as provided in Extra Work (109.04).

KEY TO ITEM NUMBERS FOR PIPES

Item Number 603 A B C D E	Item Number	Unit

603.					Section Number
	.A				Material or Use
		B			Type of Material, or Option
			C		Class
				D E	Diameter

.0		Reinforced Concrete Pipes	Linear Foot
	0	Circular	
	1	Arch	
	C	Class	
	2	Class II	
	3	Class III	
	4	Class IV	
	5	Class V	
.1		HDP Pipe	
	1	Corrugated HDP	
.2		Headwalls	Each
	0	Reinforced Concrete	
	1	Mortar Rubble Masonry	
.3		Laying or Relaying Drainage Pipe (Furnished by the City or Salvaged)	Linear Foot
	0	Unspecified	
	1	Concrete	
	2	HDP	

All items to Read:
". . . Including Specified Excavation."

Examples:

603.00415 15" Reinforced Concrete Pipe, Class IV
603.32012 Laying or Relaying 12" Drainage Pipe
603.11012 Laying or Relaying 12" HDP Pipe

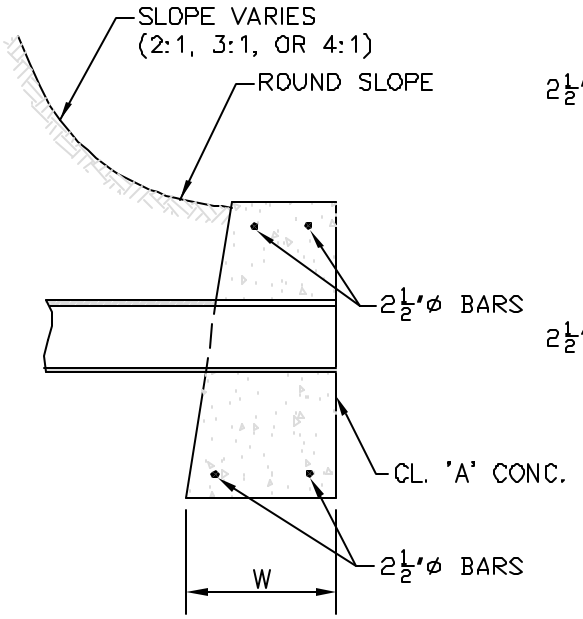

SECTION ON CENTERLINE

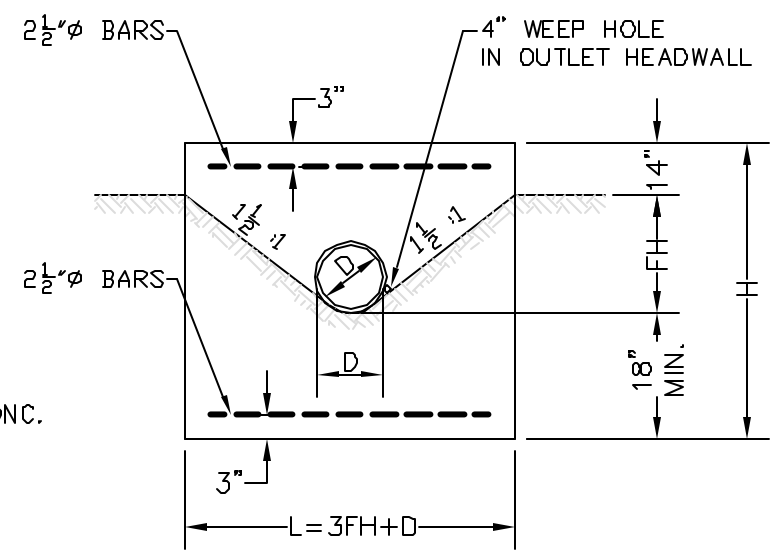

ELEVATION

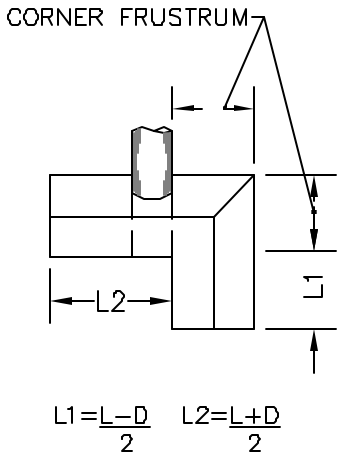

PLAN OF 'L' HEADWALL

DIAM. D INCHES	AREA OF PIPE SQ. FT.	MAS. PER FT. OF WALL SQ. YD.	MAS. PER HOLE CU. FT.	MAS. PER STD. HDR. CU. YD.	STEEL PER STD. HDR. LB.	LENGTH OF BARS	PIPE EXC. 1' DEPTH 1' LENGTH CU. YD.	HDR. EXC. PER HDR. 1' DEPTH CU. YD.	HDR. LENGTH L	HDR. HEIGHT H	FILL HEIGHT FH	h	WIDTH AT BOTTOM OF HDR. W	'L' HEADWALL	
														MAS. IN CORNER FRUSTRUM CU. YD.	HDR. EXC. PER HDR. 1' DEPTH CU. YD.
12	0.79	0.204	2.00	0.80	11	3' – 0"	0.111	0.911	4' – 3"	3' – 9"	1' – 1"	1' – 3"	1' – 11½"	0.31	1.195
15	1.23	0.240	3.18	1.32	16	5' – 8"	0.120	1.204	6' – 0"	4' – 3"	1' – 7"	1' – 6"	2' – 0¾"	0.38	1.588
18	1.77	0.260	4.51	1.66	16	5' – 8"	0.130	1.375	7' – 0"	4' – 6"	1' – 10"	1' – 6"	2' – 1½"	0.42	1.700
24	3.14	0.301	7.98	2.41	24	8' – 8"	0.148	1.731	9' – 0"	5' – 0"	2' – 4"	1' – 6"	2' – 3"	0.51	2.086
30	4.91	0.344	12.60	3.32	29	10' – 8"	0.185	2.106	11' – 0"	5' – 6"	2' – 10"	1' – 6"	2' – 4½"	0.61	2.491
36	7.07	0.389	18.48	4.43	35	12' – 8"	0.222	2.500	13' – 0"	6' – 0"	3' – 4"	1' – 8"	2' – 6"	0.72	2.917
42	9.62	0.461	26.60	6.28	42	15' – 2"	0.259	3.082	15' – 9"	6' – 9"	4' – 1"	1' – 9"	2' – 8½"	0.94	3.549
48	12.57	0.512	35.55	7.77	47	17' – 2"	0.296	3.520	17' – 9"	7' – 3"	4' – 7"	1' – 9"	2' – 9¾"	1.05	4.019
54	15.90	0.565	46.09	9.46	52	19' – 2"	0.333	3.977	19' – 9"	7' – 9"	5' – 1"	1' – 9"	2' – 11½"	1.20	4.522
60	19.63	0.621	56.25	11.42	58	21' – 2"	0.370	4.451	21' – 9"	8' – 3"	5' – 7"	1' – 9"	3' – 0¾"	1.37	5.024
66	23.76	0.689	72.34	13.68	63	23' – 2"	0.407	4.947	23' – 9"	8' – 9"	6' – 1"	1' – 9"	3' – 2½"	1.55	5.559
72	28.27	0.740	88.22	15.79	69	25' – 2"	0.445	5.460	25' – 9"	9' – 3"	6' – 7"	1' – 9"	3' – 3¾"	1.75	6.108

HEADWALLS FOR R.C. PIPE
CONCRETE MORTAR RUBBLE MASONRY

S:\DWG\DETAILS\603-1 HDWALL1.DWG

NOT TO SCALE
FIGURE 603-1

NOTE:
ALL LIKE BARS IN EACH HEADWALL ARE SAME SIZE.
EACH STD. HEADER HAS 4A, B & C-BARS, AND TWO D-BARS.

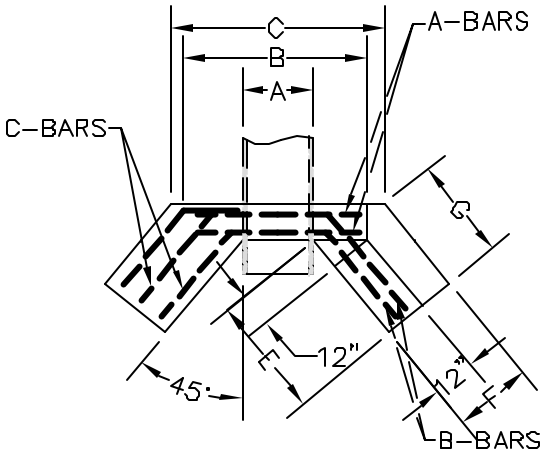

SYMMETRICAL ABOUT ℄
HALF PLAN OF
BOTTOM STEEL

HALF PLAN
SHWING TOP
STEEL

TOP ELEVATION

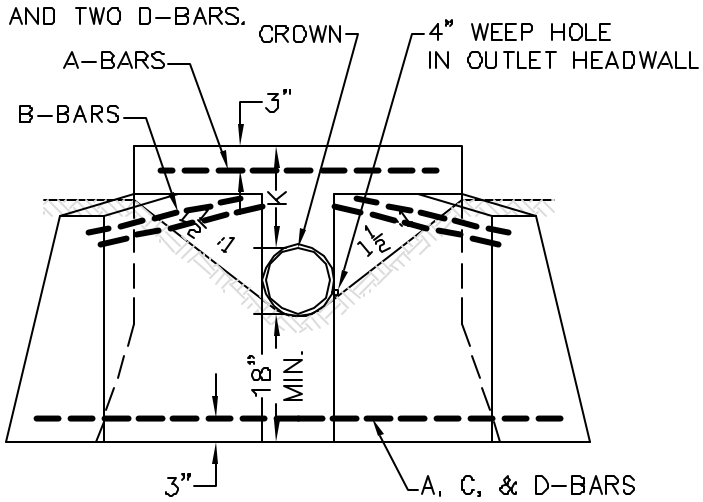

END ELEVATION

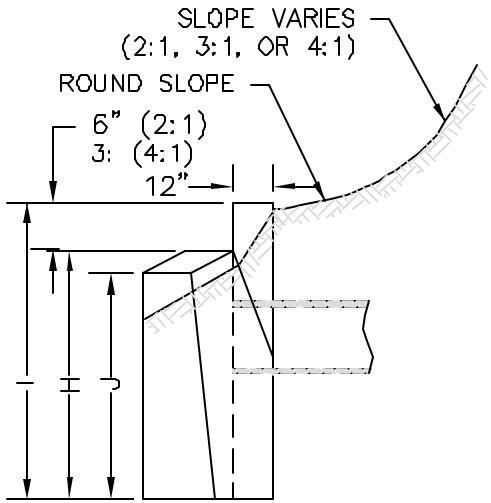

SIDE ELEVATION

	DIAM. D INCHES	AREA OF PIPE SQ. FT.	QUANTITIES PER HEADER: CONC. CU. YD.	STEEL LB.	EXC. FOR 1' DEPTH CU. YD.	PIPE EXC. PER 1' DEPTH 1' LENGTH CU. YD.	DIMENSIONS: A	B	C	E	F	G	H	I	J	K	REINFORCING STEEL: SIZE	LENGTH: A BARS	B BARS	C BARS	D BARS	D-BARS: a	b
2:1 SLOPES	24	3.14	1.97	36	1.58	0.148	2'-6"	5'-4"	6'-7"	3'-0"	1'-11"	2'-3"	5'-0"	4'-6"	3'-10"	1'-6"	½"ø	5'-0"	3'-2"	3'-0"	4'-8"	2'-5"	2'-3"
	30	4.91	2.57	42	1.80	0.185	3'-1"	5'-11"	7'-6"	3'-7"	2'-0"	2'-9"	5'-6"	5'-0"	4'-1"	1'-6"	½"ø	5'-7"	3'-9"	3'-7"	5'-3"	2'-6"	2'-9"
	36	7.07	3.24	47	2.12	0.222	3'-8"	6'-6"	8'-5"	4'-2"	2'-1"	3'-3"	6'-0"	5'-6"	4'-4"	1'-6"	½"ø	6'-2"	4'-3"	4'-1"	5'-10"	2'-8"	3'-2"
	42	9.62	4.46	125	2.35	0.259	4'-3"	7'-1"	9'-6"	5'-1"	2'-2"	4'-0"	6'-9"	6'-3"	4'-10"	1'-9"	¾"ø	6'-9"	5'-3"	4'-11"	7'-10"	3'-10"	4'-0"
	48	12.57	5.38	139	2.55	0.296	4'-10"	7'-8"	10'-5"	5'-9"	2'-3"	4'-6"	7'-3"	6'-9"	5'-1"	1'-9"	¾"ø	7'-4"	5'-11"	5'-7"	8'-5"	3'-10"	4'-7"
	54	15.90	6.46	151	3.15	0.333	5'-5"	8'-3"	11'-3"	6'-4"	2'-4"	5'-0"	7'-9"	7'-3"	5'-4"	1'-9"	¾"ø	7'-11"	6'-7"	6'-1"	9'-2"	4'-1"	5'-1"
	60	19.63	7.55	162	3.51	0.370	6'-0"	8'-10"	12'-2"	6'-11"	2'-5"	5'-6"	8'-3"	7'-9"	5'-8"	1'-9"	¾"ø	8'-6"	7'-1"	6'-8"	9'-9"	4'-1"	5'-8"
	66	23.76	8.80	176	3.80	0.407	6'-7"	9'-5"	13'-2"	7'-6"	2'-6"	6'-0"	8'-9"	8'-3"	5'-11"	1'-9"	¾"ø	9'-1"	7'-8"	7'-3"	10'-5"	4'-2"	6'-3"
	72	28.27	10.29	188	4.12	0.445	7'-2"	10'-0"	14'-0"	8'-2"	2'-7"	6'-6"	9'-3"	8'-9"	6'-3"	1'-9"	¾"ø	9'-8"	8'-3"	7'-10"	11'-0"	4'-3"	6'-9"
4:1 SLOPES	24	3.14	2.58	43	1.90	0.148	2'-6"	5'-4"	6'-9"	3'-11"	2'-1"	3'-2"	5'-0"	4'-9"	4'-3"	1'-6"	½"ø	5'-0"	4'-3"	4'-0"	5'-6"	2'-6"	3'-0"
	30	4.91	3.31	49	2.22	0.185	3'-1"	5'-11"	7'-8"	4'-8"	2'-2"	3'-9"	5'-6"	5'-3"	4'-7"	1'-6"	½"ø	5'-7"	5'-0"	4'-8"	6'-3"	2'-8"	3'-7"
	36	7.07	4.33	56	2.58	0.222	3'-8"	6'-6"	8'-7"	5'-5"	2'-3"	4'-5"	6'-0"	5'-9"	5'-0"	1'-6"	½"ø	6'-2"	5'-9"	5'-4"	7'-1"	2'-10"	4'-3"
	42	9.62	5.99	149	3.11	0.259	4'-3"	7'-1"	9'-9"	6'-7"	2'-5"	5'-4"	6'-9"	6'-6"	5'-6"	1'-9"	¾"ø	6'-9"	6'-11"	6'-5"	9'-3"	4'-0"	5'-3"	
	48	12.57	7.28	163	3.48	0.296	4'-10"	7'-8"	10'-7"	7'-4"	2'-6"	6'-0"	7'-3"	7'-0"	5'-11"	1'-9"	¾"ø	7'-4"	7'-8"	7'-1"	10'-1"	4'-2"	5'-11"
	54	15.90	8.78	179	3.89	0.333	5'-5"	8'-3"	11'-6"	8'-2"	2'-7"	6'-9"	7'-9"	7'-6"	6'-3"	1'-9"	¾"ø	7'-11"	8'-6"	7'-10"	10'-11"	4'-3"	6'-8"
	60	19.63	10.35	194	4.29	0.370	6'-0"	8'-10"	12'-5"	8'-11"	2'-8"	7'-4"	8'-3"	8'-0"	6'-7"	1'-9"	¾"ø	8'-6"	9'-3"	8'-8"	11'-9"	4'-4"	7'-5"
	66	23.76	12.10	210	4.70	0.407	6'-7"	9'-5"	13'-3"	9'-8"	2'-9"	8'-0"	8'-9"	8'-8"	7'-0"	1'-9"	¾"ø	9'-1"	10'-0"	9'-5"	12'-8"	4'-7"	8'-1"
	72	28.27	14.14	222	5.16	0.445	7'-2"	10'-0"	14'-3"	10'-6"	2'-10"	8'-8"	9'-3"	9'-0"	7'-4"	1'-9"	¾"ø	9'-8"	10'-10"	9'-9"	13'-5"	4'-8"	8'-9"

CONCRETE HEADWALLS w/45° WINGS FOR R.C. PIPE

S:\DWG\DETAILS\603-2 Conc Headwall Wings.DWG

NOT TO SCALE
FIGURE 603-2

NOTE:
DIMENSIONS SHOWN ARE TO PAVEMENT LINES.
MORTAR RUBBLE MASONRY TO BE STEPPED OUTSIDE PAVEMENT LINES ON SLOPING FACES

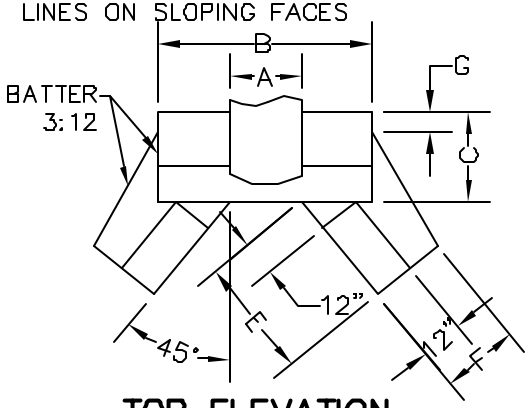

TOP ELEVATION

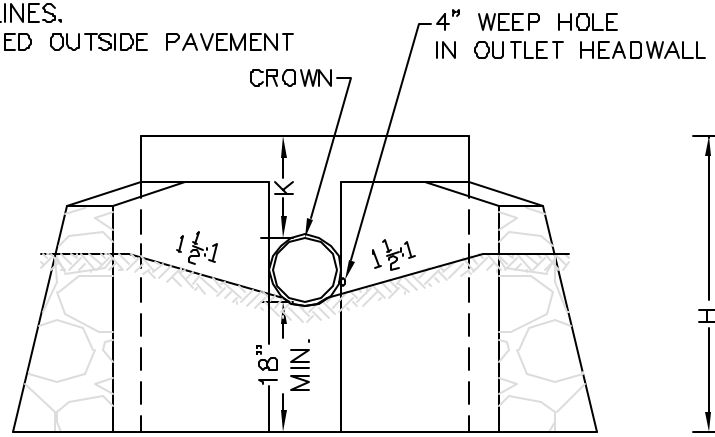

END ELEVATION

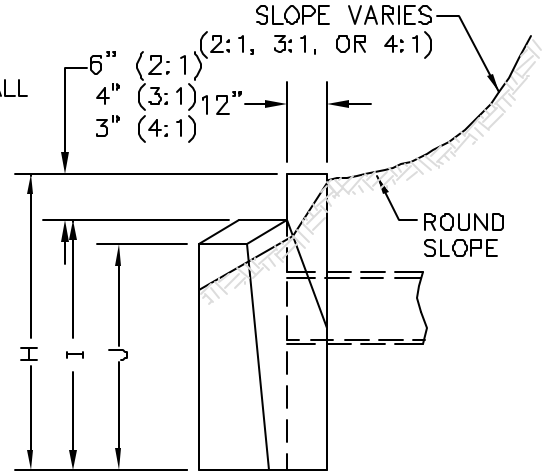

SIDE ELEVATION

	DIAM. D INCHES	AREA OF PIPE SQ. FT.	QUANTITIES IN CUBIC YARDS			DIMENSIONS									
			PER HEADER		PIPE EXC. PER 1' DEPTH 1' LENGTH										
			M.R.M.	EXC. FOR 1' DEPTH		A	B	C	E	F	G	H	I	J	K
2:1 SLOPES	24	3.14	2.45	1.89	0.148	2'-6"	5'-4"	2'-3"	2'-11"	1'-11"	0'-6"	5'-0"	4'-6"	3'-10"	1'-6"
	30	4.91	3.19	2.28	0.185	3'-1"	5'-11"	2'-5"	3'-6"	2'-0"	0'-5"	5'-6"	5'-0"	4'-1"	1'-6"
	36	7.07	4.03	2.57	0.222	3'-8"	6'-6"	2'-6"	4'-1"	2'-1"	0'-4"	6'-0"	5'-6"	4'-4"	1'-6"
	42	9.62	5.50	3.09	0.259	4'-3"	7'-1"	2'-8"	5'-0"	2'-2"	0'-3"	6'-9"	6'-3"	4'-10"	1'-9"
	48	12.57	6.88	3.53	0.296	4'-10"	7'-8"	2'-10"	5'-8"	2'-3"	0'-2"	7'-3"	6'-9"	5'-1"	1'-9"
	54	15.90	7.92	3.95	0.333	5'-5"	8'-3"	2'-11"	6'-3"	2'-4"	0'-1"	7'-9"	7'-3"	5'-4"	1'-9"
	60	19.63	9.39	4.40	0.370	6'-0"	8'-10"	3'-1"	6'-10"	2'-5"	0'-1"	8'-3"	7'-9"	5'-8"	1'-9"
	66	23.76	10.90	4.81	0.407	6'-7"	9'-5"	3'-2"	7'-5"	2'-6"	0-0"	8'-9"	8'-3"	5'-11"	1'-9"
	72	28.27	12.66	5.22	0.445	7'-2"	10'-0"	3'-4"	8'-1"	2'-7"	0'-1"	9'-3"	8'-9"	6'-3"	1'-9"
3:1 SLOPES	24	3.14	2.81	2.09	0.148	2'-6"	5'-4"	2'-3"	3'-6"	2'-1"	0'-6"	5'-0"	4'-9"	4'-3"	1'-6"
	30	4.91	3.73	2.51	0.185	3'-1"	5'-11"	2'-5"	4'-3"	2'-2"	0'-6"	5'-6"	5'-3"	4'-7"	1'-6"
	36	7.07	4.69	2.90	0.222	3'-8"	6'-6"	2'-6"	4'-11"	2'-3"	0'-4"	6'-0"	5'-9"	5'-0"	1'-6"
	42	9.62	6.47	3.46	0.259	4'-3"	7'-1"	2'-8"	6'-0"	2'-5"	0'-3"	6'-9"	6'-6"	5'-6"	1'-9"
	48	12.57	7.85	3.93	0.296	4'-10"	7'-8"	2'-10"	6'-8"	2'-6"	0'-3"	7'-3"	7'-0"	5'-11"	1'-9"
	54	15.90	9.37	4.37	0.333	5'-5"	8'-3"	2'-11"	7'-5"	2'-7"	0'-2"	7'-9"	7'-6"	6'-3"	1'-9"
	60	19.63	11.10	4.85	0.370	6'-0"	8'-10"	3'-1"	8'-1"	2'-8"	0'-1"	8'-3"	8'-0"	6'-7"	1'-9"
	66	23.76	12.95	5.36	0.407	6'-7"	9'-5"	3'-2"	8'-10"	2'-9"	0'-0"	8'-9"	8'-6"	7'-0"	1'-9"
	72	28.27	15.03	5.86	0.445	7'-2"	10'-0"	3'-4"	9'-6"	2'-10"	0'-0"	9'-3"	9'-0"	7'-4"	1'-9"
4:1 SLOPES	24	3.14	3.05	2.21	0.148	2'-6"	5'-4"	2'-3"	3'-10"	2'-1"	0'-6"	5'-0"	4'-9"	4'-3"	1'-6"
	30	4.91	4.02	2.62	0.185	3'-1"	5'-11"	2'-5"	4'-7"	2'-2"	0'-6"	5'-6"	5'-3"	4'-7"	1'-6"
	36	7.07	5.10	3.03	0.222	3'-8"	6'-6"	2'-6"	5'-4"	2'-3"	0'-4"	6'-0"	5'-9"	5'-0"	1'-6"
	42	9.62	7.03	3.65	0.259	4'-3"	7'-1"	2'-8"	6'-6"	2'-5"	0'-3"	6'-9"	6'-6"	5'-6"	1'-9"
	48	12.57	8.60	4.14	0.296	4'-10"	7'-8"	2'-10"	7'-3"	2'-6"	0'-3"	7'-3"	7'-0"	5'-11"	1'-9"
	54	15.90	10.28	4.62	0.333	5'-5"	8'-3"	2'-11"	8'-1"	2'-7"	0'-2"	7'-9"	7'-6"	6'-3"	1'-9"
	60	19.63	12.18	5.16	0.370	6'-0"	8'-10"	3'-1"	8'-10"	2'-8"	0'-1"	8'-3"	8'-0"	6'-7"	1'-9"
	66	23.76	14.24	5.67	0.407	6'-7"	9'-5"	3'-2"	9'-7"	2'-9"	0'-1"	8'-9"	8'-6"	7'-0"	1'-9"
	72	28.27	16.54	6.21	0.445	7'-2"	10'-0"	3'-4"	10'-5"	2'-10"	0'-0"	9'-3"	9'-0"	7'-4"	1'-9"

MORTAR RUBBLE MASONRY HEADWALLS w/45° WINGS FOR R.C. PIPE

S:\DWG\DETAILS\603-3 Mortar Rubble With 45.DWG

NOT TO SCALE

FIGURE 603-3

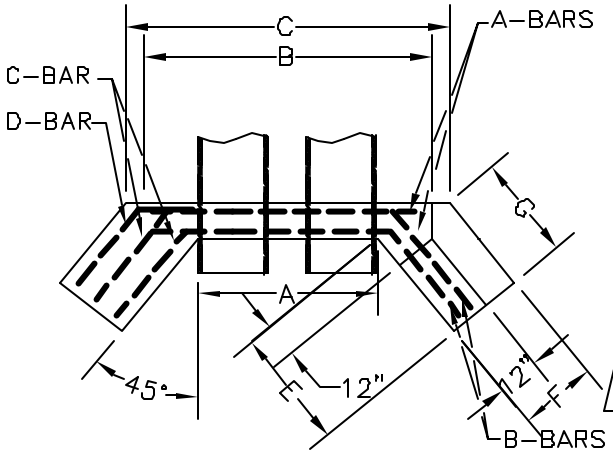

SYMMETRICAL ABOUT ~C
HALF PLAN OF
BOTTOM STEEL

HALF PLAN
SHOWING TOP
STEEL

TOP ELEVATION

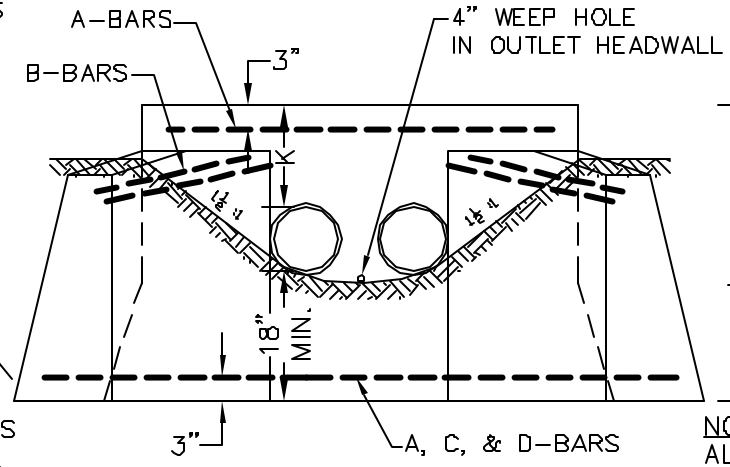

END ELEVATION

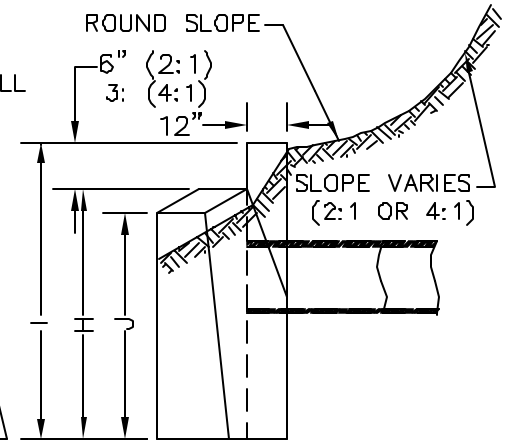

NOTE:
ALL BARS IN EACH HEADWALL ARE THE SAME SIZE. EACH STD HEADER HAS 4 A, B, & BARS, AND 2 D BARS.

SIDE ELEVATION

	DIAM. D INCHES	AREA OF PIPE SQ. FT.	QUANTITIES PER HEADER: CONC. CU. YD.	STEEL LB.	EXC. FOR 1' DEPTH CU. YD.	PIPE EXC. PER 1' DEPTH 1' LENGTH CU. YD.	DIMENSIONS: A	B	C	E	F	G	H	I	J	K	D/2	REINFORCING STEEL: SIZE	LENGTH: A BARS	B BARS	C BARS	D BARS	D-BARS: d	b
2:1 SLOPES	24	6.28	2.44	46	1.96	0.278	6'-0"	8'-10"	10'-0"	3'-0"	1'-11"	2'-3"	5'-0"	4'-6"	3'-10"	1'-6"	1'-0"	½"ø	8'-6"	3'-2"	3'-0"	4'-8"	2'-5"	2'-3"
	30	9.82	3.18	53	2.28	0.345	7'-5"	10'-3"	11'-9"	3'-7"	2'-0"	2'-8"	5'-6"	5'-0"	4'-1"	1'-6"	1'-3"	½"ø	9'-11"	3'-8"	3'-7"	5'-3"	2'-6"	2'-9"
	36	14.14	3.99	61	2.69	0.414	8'-10"	11'-8"	13'-7"	4'-2"	2'-1"	3'-3"	6'-0"	5'-6"	4'-4"	1'-6"	1'-6"	½"ø	11'-4"	4'-3"	4'-1"	5'-10"	2'-8"	3'-2"
	42	19.24	5.43	161	3.22	0.482	10'-3"	13'-1"	15'-6"	5'-1"	2'-2"	4'-0"	6'-9"	6'-3"	4'-10"	1'-9"	1'-9"	¾"ø	12'-9"	5'-3"	4'-11"	7'-10"	3'-10"	4'-0"
	48	25.13	6.53	180	3.64	0.549	11'-8"	14'-6"	17'-3"	5'-9"	2'-3"	4'-6"	7'-3"	6'-9"	5'-1"	1'-9"	2'-0"	¾"ø	14'-2"	5'-11"	5'-7"	8'-5"	3'-10"	4'-7"
	54	31.81	7.76	197	4.00	0.618	13'-1"	15'-11"	19'-1"	6'-4"	2'-4"	5'-0"	7'-9"	7'-3"	5'-4"	1'-9"	2'-3"	¾"ø	15'-7"	6'-7"	6'-1"	9'-2"	4'-1"	5'-1"
	60	39.27	9.10	214	4.45	0.685	14'-6"	17'-4"	20'-10"	6'-11"	2'-5"	5'-6"	8'-3"	7'-9"	5'-8"	1'-9"	2'-6"	¾"ø	17'-0"	7'-1"	6'-8"	9'-9"	4'-1"	5'-8"
	66	47.52	10.56	232	4.84	0.752	15'-11"	18'-9"	22'-5"	7'-6"	2'-6"	6'-0"	8'-9"	8'-3"	5'-11"	1'-9"	2'-9"	¾"ø	18'-5"	7'-8"	7'-3"	10'-5"	4'-2"	6'-3"
	72	56.55	12.28	249	5.25	0.821	17'-4"	20'-2"	24'-2"	8'-2"	2'-7"	6'-6"	9'-3"	8'-9"	6'-3"	1'-9"	3'-0"	¾"ø	19'-10"	8'-3"	7'-10"	11'-0"	4'-3"	6'-9"
4:1 SLOPES	24	6.28	3.05	53	2.29	0.278	6'-0"	8'-10"	10'-0"	3'-11"	2'-1"	3'-2"	5'-0"	4'-9"	4'-3"	1'-6"	1'-0"	½"ø	8'-6"	4'-3"	4'-0"	5'-6"	2'-6"	3'-0"
	30	9.82	3.92	61	2.70	0.345	7'-5"	10'-3"	11'-9"	4'-8"	2'-2"	3'-9"	5'-6"	5'-3"	4'-7"	1'-6"	1'-3"	½"ø	9'-11"	5'-0"	4'-8"	6'-3"	2'-8"	3'-7"
	36	14.14	5.09	70	3.15	0.414	8'-10"	11'-8"	13'-7"	5'-5"	2'-3"	4'-5"	6'-0"	5'-9"	5'-0"	1'-6"	1'-6"	½"ø	11'-4"	5'-9"	5'-4"	7'-1"	2'-10"	4'-3"
	42	19.24	6.97	185	3.78	0.482	10'-3"	13'-1"	15'-6"	6'-7"	2'-5"	5'-4"	6'-9"	6'-6"	5'-6"	1'-9"	1'-9"	¾"ø	12'-9"	6'-11"	6'-5"	9'-3"	4'-0"	5'-3"
	48	25.13	8.44	204	4.24	0.549	11'-8"	14'-6"	17'-3"	7'-4"	2'-6"	6'-0"	7'-3"	7'-0"	5'-11"	1'-9"	2'-0"	¾"ø	14'-2"	7'-8"	7'-1"	10'-1"	4'-2"	5'-11"
	54	31.81	10.13	225	4.74	0.618	13'-1"	15'-11"	19'-1"	8'-2"	2'-7"	6'-9"	7'-9"	7'-6"	6'-3"	1'-9"	2'-3"	¾"ø	15'-7"	8'-6"	7'-10"	10'-11"	4'-3"	6'-8"
	60	39.27	11.90	245	5.23	0.685	14'-6"	17'-4"	20'-10"	8'-11"	2'-8"	7'-4"	8'-3"	8'-0"	6'-7"	1'-9"	2'-6"	¾"ø	17'-0"	9'-3"	8'-8"	11'-9"	4'-4"	7'-5"
	66	47.52	13.87	266	5.74	0.752	15'-11"	18'-9"	22'-5"	9'-8"	2'-9"	8'-0"	8'-9"	8'-6"	7'-0"	1'-9"	2'-9"	¾"ø	18'-5"	10'-0"	9'-5"	12'-8"	4'-7"	8'-1"
	72	56.55	16.13	283	6.29	0.821	17'-4"	20'-2"	24'-2"	10'-6"	2'-10"	8'-8"	9'-3"	9'-0"	7'-4"	1'-9"	3'-0"	¾"ø	19'-10"	10'-10"	9'-9"	13'-5"	4'-8"	8'-9"

CONCRETE HEADWALLS w/45° WINGS FOR TWIN R.C. PIPE

S:\DWG\DETAILS\603-4 Concrete Headwall With 45.DWG

NOT TO SCALE

FIGURE 603-4

NOTE:
DIMENSIONS SHOWN ARE TO PAYMENT LINES. MORTAR RUBBLE MASONRY TO BE STEPPED OUTSIDE PAYMENT LINES ON SLOPING FACES

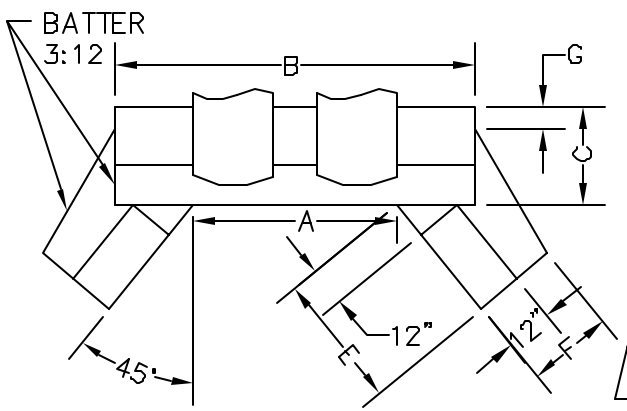

TOP ELEVATION

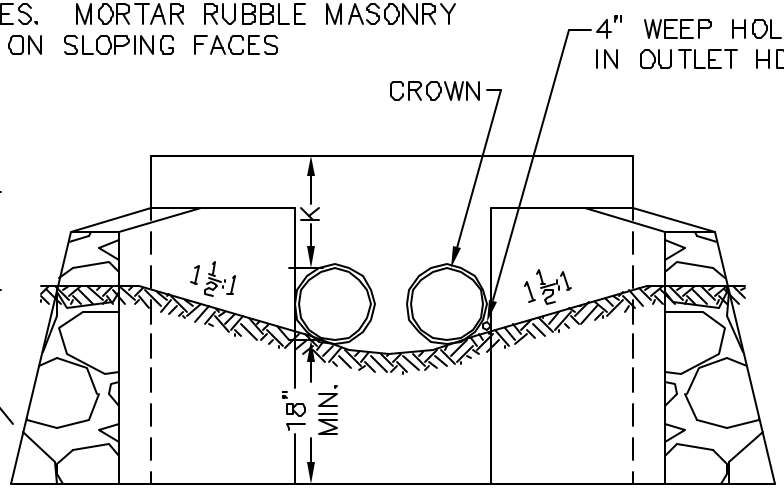

END ELEVATION

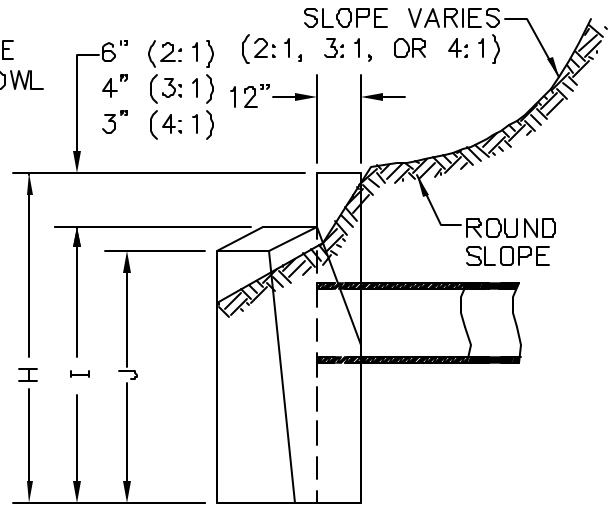

SIDE ELEVATION

2:1 SLOPES

DIAM. D INCHES	AREA OF PIPE SQ. FT.	QUANTITIES IN CUBIC YARDS					DIMENSIONS									
		PER HEADER				PIPE EXC. PER 1' DEPTH 1' LENGTH	A	B	C	E	F	G	H	I	J	K
		M.R.M. V = 5'	M.R.M./FT. ADD LENGTH	EXC. FOR 1' DEPTH V = 5'	EXC./FT. ADD LENGTH											
24	6.28	4.40	.300	3.08	0.157	0.426	10'-0"	12'-10"	2'-3"	2'-11"	1'-11"	0'-6"	5'-0"	4'-6"	3'-10"	1'-6"
30	9.82	5.56	.348	3.60	0.163	0.485	11'-2"	14'-0"	2'-5"	3'-6"	2'-0"	0"-5"	5'-6"	5'-0"	4'-1"	1'-6"
36	14.14	6.71	.389	4.03	0.167	0.543	12'-4"	15'-2"	2'-6"	4'-1"	2'-1"	0'-4"	6'-0"	5'-6"	4'-4"	1'-6"
42	19.24	8.75	.458	4.68	0.173	0.602	13'-6"	16'-4"	2'-8"	5'-0"	2'-2"	0'-3"	6'-9"	6'-3"	4'-10"	1'-9"
48	25.13	10.43	.515	5.29	0.179	0.660	14'-8"	17'-6"	2'-10"	5'-8"	2'-3"	0'-2"	7'-3"	6'-9"	5'-1"	1'-9"
54	31.81	12.07	.562	5.85	0.182	0.719	15'-10"	18'-8"	2'-11"	6'-3"	2'-4"	0'-1"	7'-9"	7'-3"	5'-4"	1'-9"
60	39.27	14.09	.624	6.47	0.188	0.778	17'-0"	19'-10"	3'-1"	6'-10"	2'-5"	0'-1"	8'-3"	7'-9"	5'-8"	1'-9"
66	47.52	16.05	.675	7.03	0.191	0.836	18'-2"	21'-0"	3'-2"	7'-5"	2'-6"	0-0"	8'-9"	8'-3"	5'-11"	1'-9"
72	56.55	18.41	.742	7.63	0.198	0.895	19'-4"	22'-2"	3'-4"	8'-1"	2'-7"	0'-1"	9'-3"	8'-9"	6'-3"	1'-9"

MORTAR RUBBLE MASONRY HEADWALLS w/45° WINGS FOR TWIN R.C. PIPE

S:\DWG\DETAILS\603-5 Mortar Rubble With 45.DWG

NOT TO SCALE
FIGURE 603-5

3:1 SLOPE

DIAM. D INCHES	AREA OF PIPE SQ. FT.	QUANTITIES IN CUBIC YARDS					DIMENSIONS									
		PER HEADER				PIPE EXC. PER 1' DEPTH 1' LENGTH	A	B	C	E	F	G	H	I	J	K
		M.R.M. V = 5'	M.R.M./FT. ADD LENGTH	EXC. FOR 1' DEPTH V = 5'	EXC./FT. ADD LENGTH											
24	6.28	4.77	.300	3.27	0.157	0.426	10'-0"	12'-10"	2'-3"	3'-6"	2'-1"	0'-6"	5'-0"	4'-9"	4'-3"	1'-6"
30	9.82	6.08	.348	3.83	0.163	0.485	11'-2"	14'-0"	2'-5"	4'-3"	2'-2"	0'-6"	5'-6"	5'-3"	4'-7"	1'-6"
36	14.14	7.38	.389	4.34	0.167	0.543	12'-4"	15'-2"	2'-6"	4'-11"	2'-3"	0'-4"	6'-0"	5'-9"	5'-0"	1'-6"
42	19.24	9.72	.458	5.06	0.173	0.602	13'-6"	16'-4"	2'-8"	6'-0"	2'-5"	0'-3"	6'-9"	6'-6"	5'-6"	1'-9"
48	25.13	11.59	.515	5.69	0.179	0.660	14'-8"	17'-6"	2'-10"	6'-8"	2'-6"	0'-3"	7'-3"	7'-0"	5'-11"	1'-9"
54	31.81	13.52	.562	6.27	0.182	0.719	15'-10"	18'-8"	2'-11"	7'-5"	2'-7"	0'-2"	7'-9"	7'-6"	6'-3"	1'-9"
60	39.27	15.80	.624	6.92	0.188	0.778	17'-0"	19'-10"	3'-1"	8'-1"	2'-8"	0'-1"	8'-3"	8'-0"	6'-7"	1'-9"
66	47.52	18.10	.675	7.58	0.191	0.836	18'-2"	21'-0"	3'-2"	8'-10"	2'-9"	0'-0"	8'-9"	8'-6"	7'-0"	1'-9"
72	56.55	20.80	.742	8.26	0.198	0.895	19'-4"	22'-2"	3'-4"	9'-6"	2'-10"	0'-0"	9'-3"	9'-0"	7'-4"	1'-9"

4:1 SLOPE

DIAM. D INCHES	AREA OF PIPE SQ. FT.	QUANTITIES IN CUBIC YARDS					DIMENSIONS									
		PER HEADER				PIPE EXC. PER 1' DEPTH 1' LENGTH	A	B	C	E	F	G	H	I	J	K
		M.R.M. V = 5'	M.R.M./FT. ADD LENGTH	EXC. FOR 1' DEPTH V = 5'	EXC./FT. ADD LENGTH											
24	6.28	5.01	.300	3.39	0.157	0.426	10'-0"	12'-10"	2'-3"	3'-10"	2'-1"	0'-6"	5'-0"	4'-9"	4'-3"	1'-6"
30	9.82	6.37	.348	3.94	0.163	0.485	11'-2"	14'-0"	2'-5"	4'-7"	2'-2"	0'-6"	5'-6"	5'-3"	4'-7"	1'-6"
36	14.14	7.79	.389	4.47	0.167	0.543	12'-4"	15'-2"	2'-6"	5'-4"	2'-3"	0'-4"	6'-0"	5'-9"	5'-0"	1'-6"
42	19.24	10.30	.458	5.25	0.173	0.602	13'-6"	16'-4"	2'-8"	6'-6"	2'-5"	0'-3"	6'-9"	6'-6"	5'-6"	1'-9"
48	25.13	12.34	.515	5.90	0.179	0.660	14'-8"	17'-6"	2'-10"	7'-3"	2'-6"	0'-3"	7'-3"	7'-0"	5'-11"	1'-9"
54	31.81	14.46	.562	6.52	0.182	0.719	15'-10"	18'-8"	2'-11"	8'-1"	2'-7"	0'-2"	7'-9"	7'-6"	6'-3"	1'-9"
60	39.27	16.85	.624	7.23	0.188	0.778	17'-0"	19'-10"	3'-1"	8'-10"	2'-8"	0'-1"	8'-3"	8'-0"	6'-7"	1'-9"
66	47.52	19.41	.675	7.89	0.191	0.836	18'-2"	21'-0"	3'-2"	9'-7"	2'-9"	0'-1"	8'-9"	8'-6"	7'-0"	1'-9"
72	56.55	22.26	.742	8.62	0.198	0.895	19'-4"	22'-2"	3'-4"	10'-5"	2'-10"	0'-0"	9'-3"	9'-0"	7'-4"	1'-9"

MORTAR RUBBLE MASONRY HEADWALLS w/45° WINGS FOR TWIN R.C. PIPE

S:\DWG\DETAILS\603-5 Mortar Rubble With 45.DWG

NOT TO SCALE

FIGURE 603-6

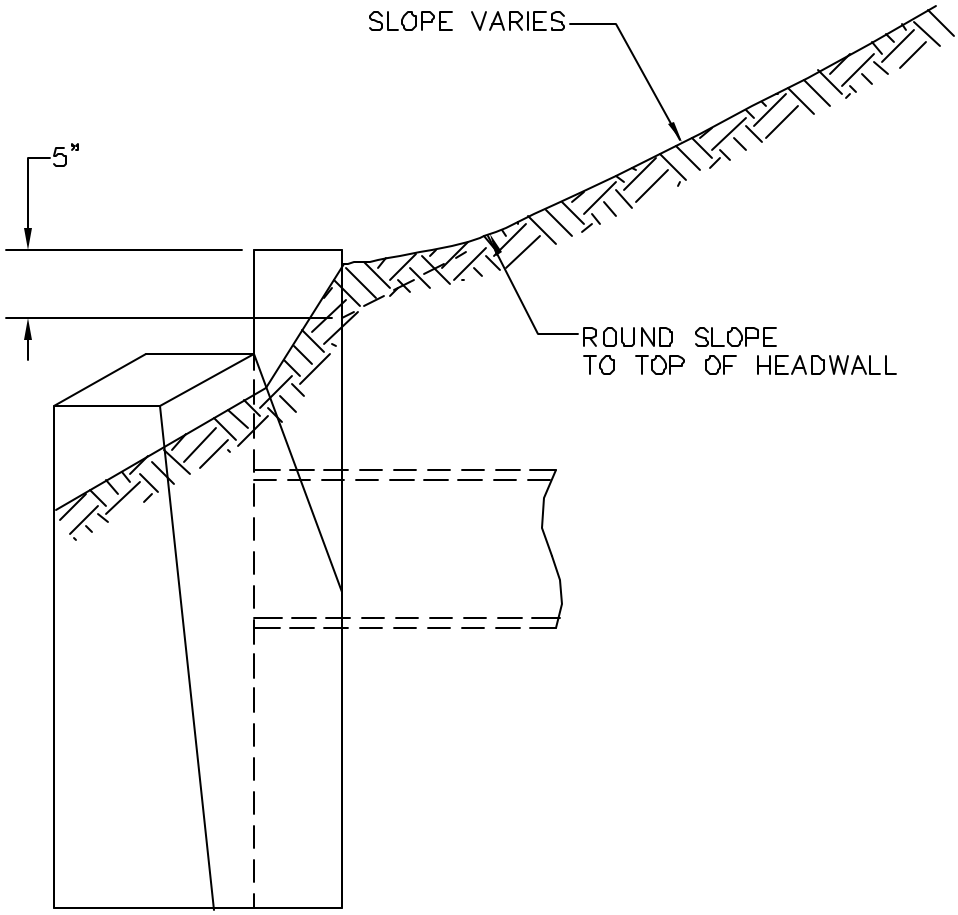

SIDE ELEVATION

SLOPE ROUNDING AT TOP OF CULVERT HEADWALL

S:\DWG\DETAILS\603-6 Slope Rounding.DWG

NOT TO SCALE

FIGURE 603-7

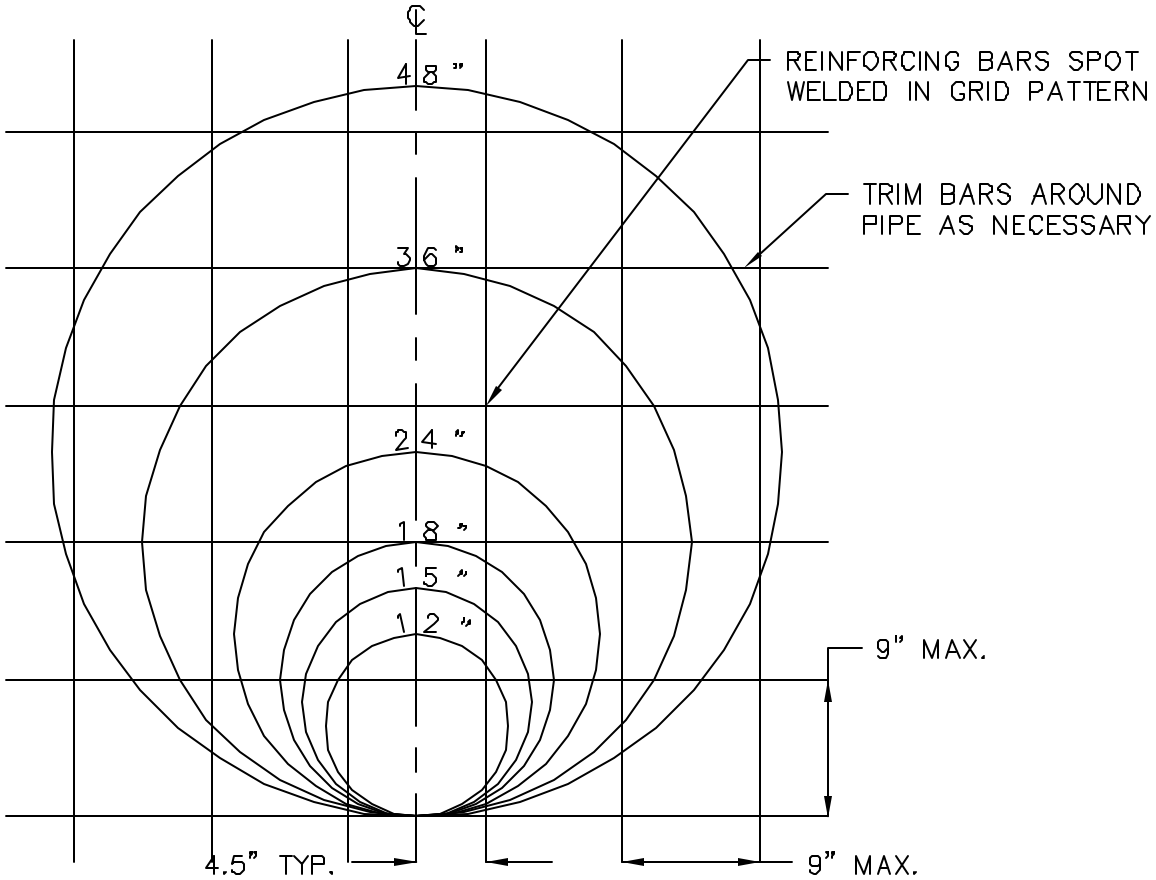

EXAMPLE:
(24" RCP)

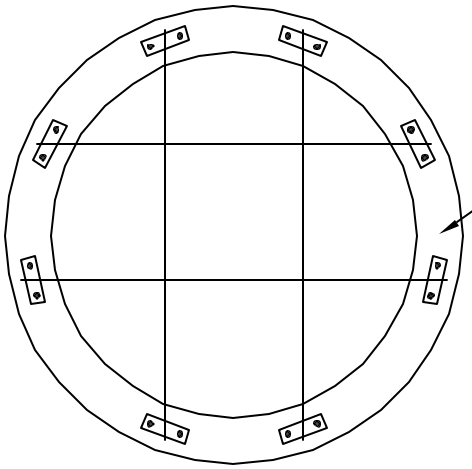

PROTECTION GRATE FOR PIPE OUTLETS

S:\DWG\DETAILS\603-8 OUTLET.DWG

NOT TO SCALE

FIGURE 603-8a

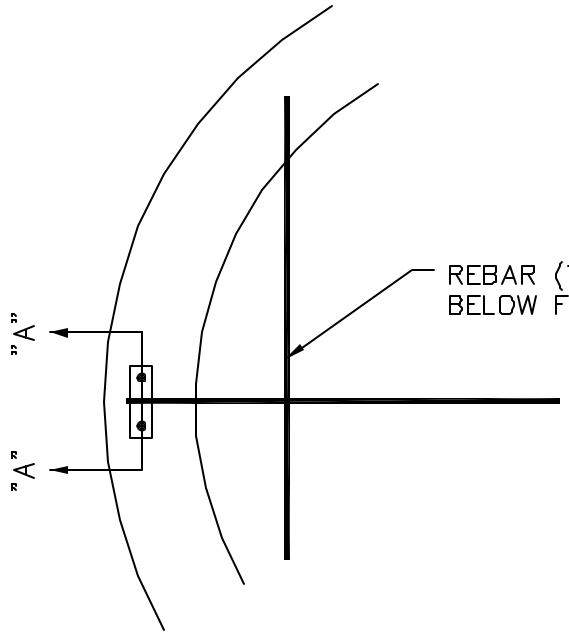

BAR FASTENER DETAIL

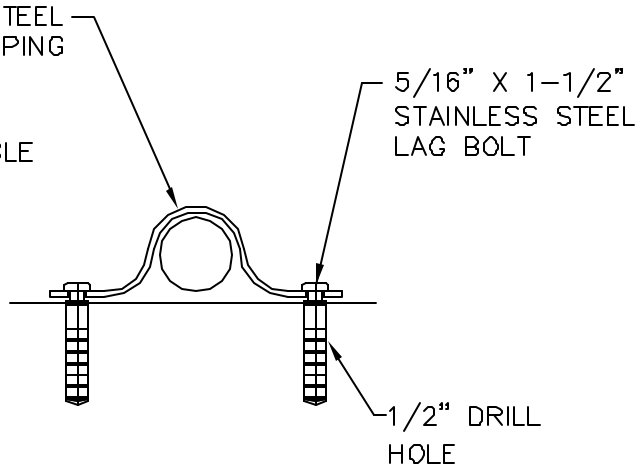

SECTION A – A

PIPE DIAMETER	BAR SIZE
12"	#3 BARS FOR ALL BARS
15"	#4 BARS FOR ALL BARS CONNECTED TO PIPE, #3 BARS FOR OTHERS.
18"	#4 BARS FOR ALL BARS CONNECTED TO PIPE, #3 BARS FOR OTHERS.
24"	#5 BARS FOR ALL BARS CONNECTED TO PIPE, #3 BARS FOR OTHERS.
36"	#8 BARS FOR ALL BARS CONNECTED TO PIPE, #5 BARS FOR OTHERS.
48"	#11 BARS FOR ALL BARS CONNECTED TO PIPE, #8 BARS FOR OTHERS.

FOR CONNECTION TO REINFORCED CONCRETE PIPE OR HEADWALL:

FOR PIPE SIZES SIZES OF 24" OR SMALLER, USE 1/2" DIAMETER 1-1/2" LONG LAG BOLT EXPANSION SHIELDS.

FOR PIPE SIZES OVER 24", USE 1" DIA. 3" LONG LAG BOLT EXPANSION SHIELDS.

PROVIDE FOUR (4) CONNECTION POINTS (MIN.)

PROTECTION GRATE FOR PIPE OUTLETS

S:\DWG\DETAILS\603-8 OUTLET.DWG

NOT TO SCALE

FIGURE 603-8b

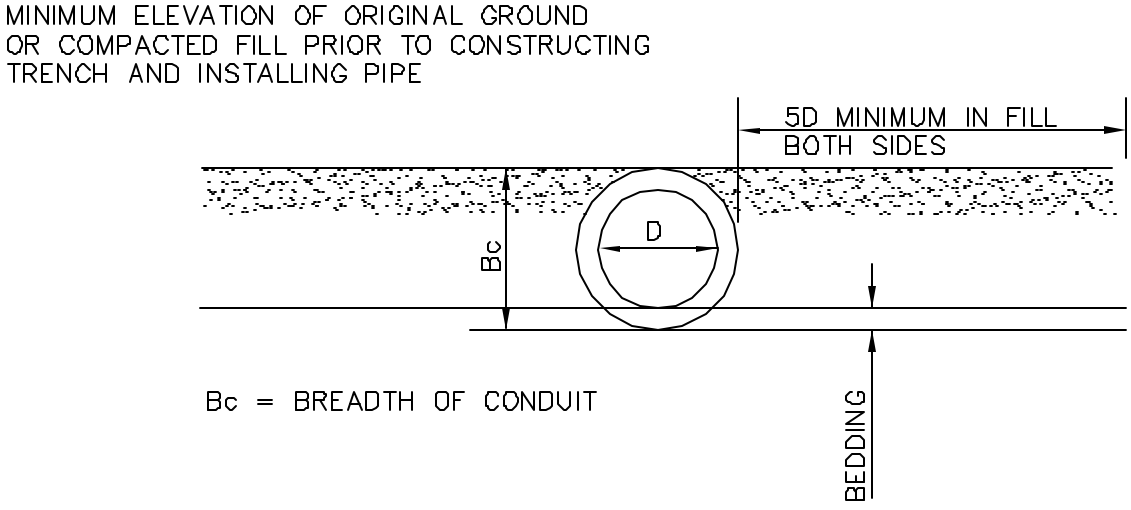

CULVERT DETAILS

S:\DWG\DETAILS\CLVRT-D1.DWG

NOT TO SCALE

FIG. 603-9

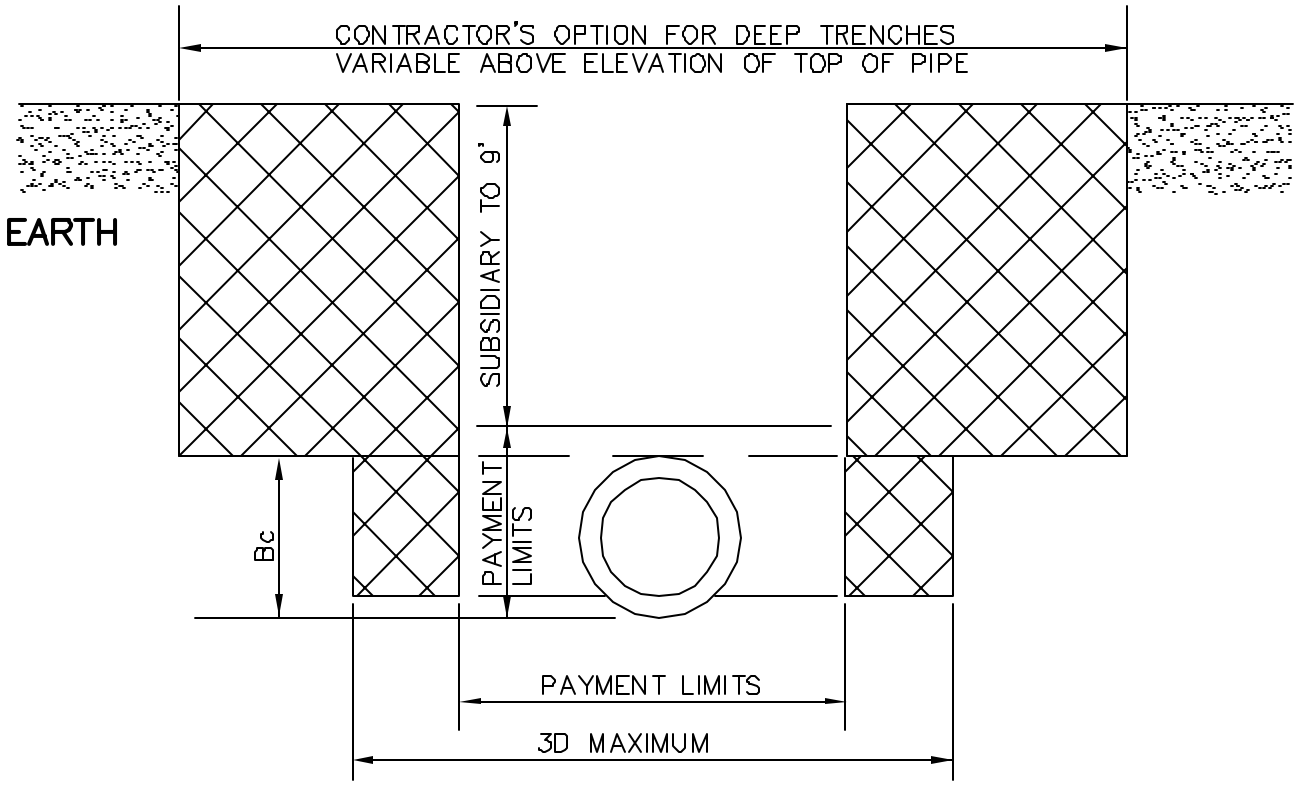

Bc = BREADTH OF CONDUIT

CULVERT DETAILS

NOT TO SCALE

FIG. 603–10

ROCK

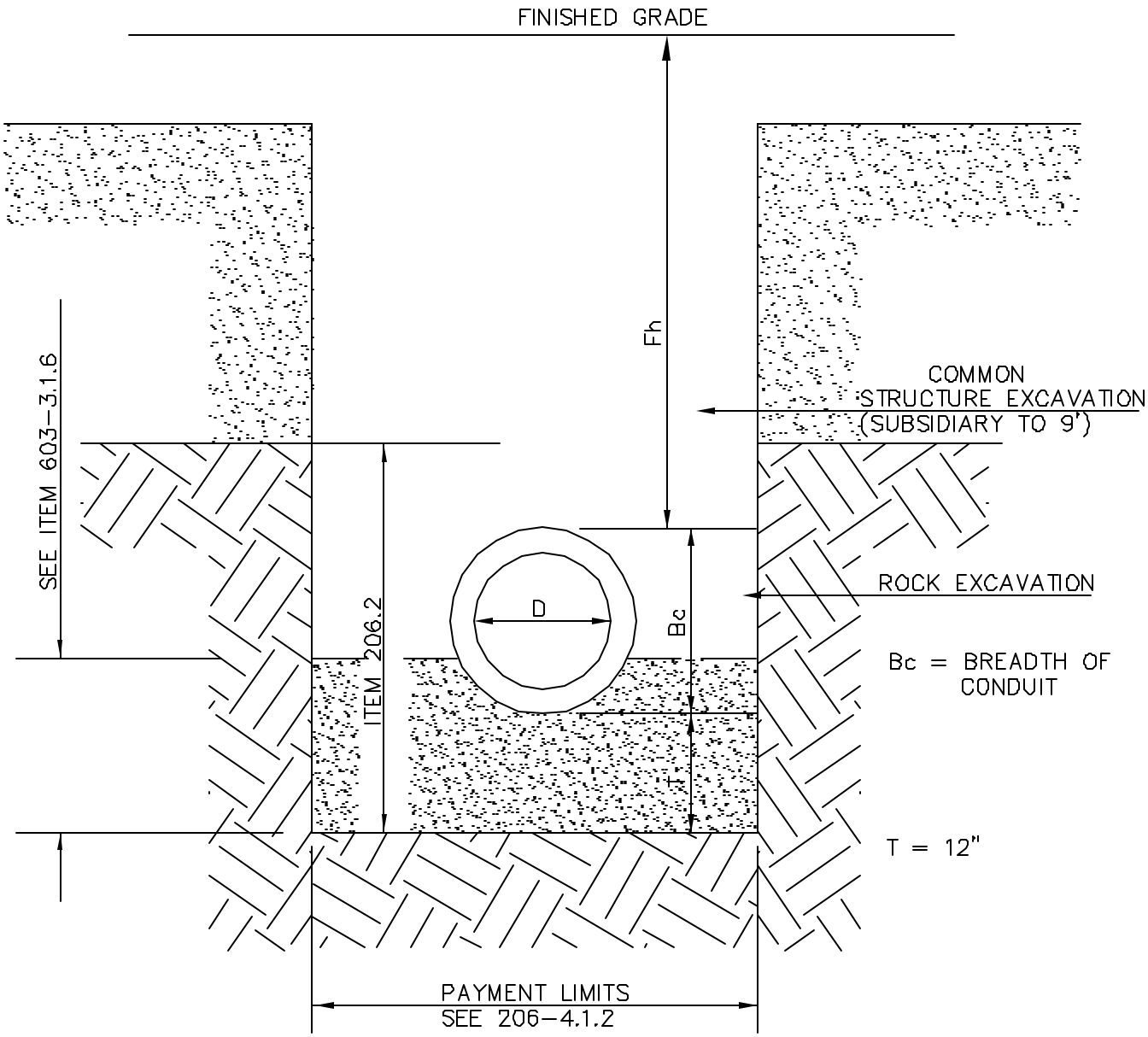

CULVERT DETAILS

S:\DWG\DETAILS\CLVRT-D2.DWG

NOT TO SCALE

FIG. 603-11

SECTION 604 --CATCH BASINS, DROP INLETS AND DRAIN MANHOLES

Description

1.1 This work shall consist of furnishing and installing or reconstructing catch basins, drop inlets and drain manholes; and furnishing, placing or adjusting grates or manhole covers all as shown on the plans or as ordered. Common structure excavation to the depth specified in 206.4.1, bedding if required, and backfill shall be included in this work.

1.1.1 Surfaces of drainage structures shall be completely coated with water repellent inside and outside for new structures and existing structures shall be coated on the inside above the flow line unless directed otherwise.

Materials

2.1 General.

2.1.1 Catch basins, drop inlets and drain manholes and related appurtenances shall be precast concrete. Brick masonry and barrel block construction will not be allowed.

2.1.1.1 Cone and transition sections shall be of the eccentric type.

2.1.1.2 All catch basins shall have sumps 1.5 feet deep.

2.1.1.3 Base sections shall be monolithic to a point no less than 6 inches above the crown of the incoming pipe.

2.1.1.4 Joints shall be tongue and groove type and shall be sealed watertight with an approved rubber or bitumastic sealant.

2.1.1.5 The name of the manufacturer and the date of manufacture shall be clearly marked on each precast section.

2.2 Concrete shall be of the specified class and shall conform to the requirements of 520.

2.3 Reinforcing steel shall conform to the requirements of 544.

2.4 Precast concrete sections shall conform to AASHTO M 199. The concrete shall be Class AA, meeting requirements of 520.

2.5 Clay brick shall conform to the requirements of AASHTO M 91, Grade M5. The use of concrete brick will not be permitted.

2.6 Concrete masonry units shall conform to the requirements of ASTM C139 and shall have a minimum compressive strength of 3,000 psi when tested by the method of AASHTO T 140.

2.7 Cement mortar shall conform to the requirements of 707.

2.8 Non-shrinking mortar shall be Hallemite, Waterplug, Embecco or an approved equal.

2.9 Castings shall be gray iron conforming to AASHTO M105. Unless otherwise specified, all gray iron castings shall be Class 30.

2.10 Steel grates shall be of structural steel conforming to AASHTO M 183 (ASTM A 36). The grates shall be fabricated as shown on the plans or approved. All top edges shall be flush and all rivets shall be tight and properly headed. After fabrication, the grates shall be galvanized in accordance with AASHTO M 111 or ASTM A 153 as applicable.

2.11 The word "DRAIN" in 3 inch letters shall be plainly cast in the center of each cover.

2.12 Joints shall be sealed watertight with an approved rubber or bitumastic sealant conforming to ASTM C 32.

2.13 Bedding and backfill material shall conform to the requirements of Section 209.

2.14 Water repellent shall conform to 534.2.2

Construction Requirements

3.1 Excavation shall conform to the requirements of 206.

3.2 Bedding and backfill shall conform to the requirements of 209.

3.3 Precast concrete sections shall be at least 10 days old when delivered to the construction site.

3.4 Catch basins, drop inlets and drain manholes shall be placed at the designated locations on a prepared foundation so that the flow lines of the pipes entering and exiting, will conform to the required grades.

3.5 The Contractor shall provide for the temporary diversion of water in order to permit the installation of drainage structures in a reasonably dry trench unless otherwise permitted by the Engineer.

3.6 Drain manholes shall have concrete inverts and shelves conforming to one-half of the diameter of the largest pipe. At changes in direction, the inverts shall be laid out in

curves of the longest radius possible tangent to the center line of the drain pipes. Shelves shall slope towards the invert channels at a rate of 1/2 inch per foot.

3.7 Concrete construction shall conform to the requirements of structural concrete. Masonry shall conform to the requirements for the respective type. Masonry shall fit neatly and tightly around the pipe.

3.8 All lifting holes and pipe to drainage structure joints shall be neatly sealed watertight with non-shrinking mortar.

3.9 Prior to installation and adjustment of grates, covers and frames, the tops of drainage structures shall be temporarily covered to prevent accidental entry.

3.10 In accordance with the provisions of AASHTO M 105, 17.2, following are the "other matters of workmanship and finish" required: frames and grates or frames and covers shall be matched before being incorporated into the work. Grates and covers shall make full and even bearing on the underlying surface to fit into the frames without rocking.

3.11 Structures within the limits of bituminous concrete pavement shall be temporarily set at the elevation of the bottom of the binder course, or as ordered. After the binder course has been compacted, these structures shall be set at their final grade. Backfill necessary around such structures after the base course has been completed, shall be made with Class A concrete unless otherwise ordered.

3.11.1 Brick or precast concrete rings shall be used to adjust frames to grade. The maximum allowable adjustment shall be 12 inches.

3.11.2 Frames shall be set on a full bed of mortar to ensure a watertight fit. They shall be set true to grade and fully aligned with the masonry opening.

3.11.3 A mortar fillet extending to the outer edge of the masonry a minimum of 1 inch thick, shall be constructed around the frame in such a manner as to shed water.

3.12 When reconstruction of existing structures is specified, the frames, covers and gratings shall be removed and the walls reconstructed as required. The frames shall be cleaned and reset at the required elevations.

3.12.1 Structures specified to be adjusted shall be built up to the required grade according to the requirements of 3.8.

3.13 When connections to existing drainage structures are specified, the openings shall be cored and the pipe to structure joints neatly and tightly sealed.

3.14 Upon completion, each drainage structure shall be cleaned of silt, debris, or other matter of any kind and shall be kept clean until final acceptance of the work.

3.15 Surface preparation for drainage structures to be treated with water repellent shall be sufficient to remove dust, dirt, oil, wax, other coatings, effloresence and other foreign materials. All surfaces shall be dry prior to the application of water repellent.

3.15.1 Treatment shall be performed in accordance with the other applicable provisions of 534.

Method of Measurement

4.1 Catch basins, drop inlets and drain manholes will be measured by the vertical foot to the nearest 0.1 of a foot, from the bottom of the metal frame (or the top of the concrete cover) to the top of the floor slab of the structure.

4.2 Reconstructing catch basins, drop inlets or manholes will be measured to the nearest 0.1 of a foot, vertically to the nearest 0.1 of a foot, between the bottom of the metal frame to the top of undisturbed portion of the existing structure. At least 0.5 feet of reconstruction will be allowed in all cases.

4.3 Grates or manhole covers will be measured by the number of units installed. A cover and frame will be a unit and a grate and frame will be a unit.

4.4 Adjusting grates or covers and frames or replacing rectangular concrete slab tops which have been set by others will be measured by the number of units adjusted.

4.5 Connecting existing drainage structures will be measured by the number of units connected.

4.6 Water repellent for existing drainage structures will be measured by the each for the number of drainage structures ordered to be treated.

Basis of Payment

5.1 The accepted quantities of catch basins, drop inlets and drain manholes of the diameter specified, will be paid for at the contract unit price per vertical foot. Which price shall constitute full compensation for excavation (except rock), backfill, bedding and furnishing all materials, tools, equipment, labor and incidentals needed to complete the work, with the following stipulations:

5.1.1 All rock structure excavation and any excavation of unsuitable material required below the specified grade will be paid for as provided in 206. Over excavation for bedding proposed in ledge and backfill for said over excavation will be subsidiary.

5.1.2 When the depth of excavation for a catch basin, drop inlet or manhole is increased more than one foot by lowering the grade, additional excavation will be paid

for as provided in 206.

5.1.3 Granular backfill material necessary for the replacement of unsuitable material removed below the specified grade will be paid for as provided in 209. Granular backfill necessary for the replacement of overexcavated ledge will be subsidiary.

5.1.4 No extra compensation will be made for structures constructed in accordance with 3.11.

5.1.5 Water repellent for new drainage structures will be subsidiary.

5.2 The accepted quantities of connecting existing drainage structures will be paid for at the contract unit price per each existing structure connected complete in place, which price shall constitute full compensation for furnishing all materials, tools, equipment, labor and incidentals needed to complete the work.

5.2.1 No payment will be made for reconstructing portions of the above structures which are unnecessarily disturbed.

5.2.2 No separate payment will be made for excavation for reconstructing the above structures.

5.3 The accepted quantities of grates and frames or manhole covers and frames or of adjusting grates and covers and frames or of replacing rectangular concrete slab tops which have been set by others will be paid for at the contract unit price per each complete in place, which price shall constitute full compensation for excavation, backfill and furnishing all materials, tools, equipment, labor and incidentals needed to complete the work.

5.4 Temporary diversion of water including trenching or pumping directly from the trench or sumps shall be subsidiary to the drain structure installation. When well points or other specific dewatering devices are requested or ordered, they will be paid as shown or as extra work.

5.5 The accepted quantities of water repellent for existing drainage structures will be paid for at the contract unit price per each complete structure.

5.5.1 No separate payment will be made for surface preparation.

KEY TO ITEM NUMBERS FOR CATCH BASINS, DROP INLETS AND DRAIN MANHOLES

Item Number				Unit
604	.A	B	Item Number	
604			Section Number	
	.A		Structure	
		B	Diameter or Grate Type	
	.1		Catch Basins, ___ft Diameter	V.F.
	.2		Drop Inlets, ___ ft Diameter	V.F.
	.3		Drain Manhole, ___ ft Diameter	V.F.
	.4		Reconstructing Catch Basins and Drop Inlets	V.F.
	.45		Adjusting Catch Basins and Drop Inlet Grates and Frames	Each
	.5		Reconstructing Drainage Manholes	V.F.
	.55		Adjusting Drain Manhole Covers and Frames	Each
	.6		Drain Manhole Covers and Frames	Each
	.7		Concrete Rectangular Slab Top Replacement	Each
	.8		Grates and Frames, Type ___	Each
		1	Type A	
		2	Type B	
		3	Type C	
		4	Blank	
		5	Type E	
		6	Type F	
		7	Frames and Grates Furnished by Others	
		8	Special	
	.95		Water Repellent for Existing Catch Basins and Drop Inlets	Each

Examples:

604.14 Catch Basin, 4 ft Diameter
604.24 Drop Inlet, 4 ft Diameter
604.35 Drain Manhole, 5 ft Diameter
604.6 Drain Manhole Covers and Frames
604.82 Grates and Frames, Type B

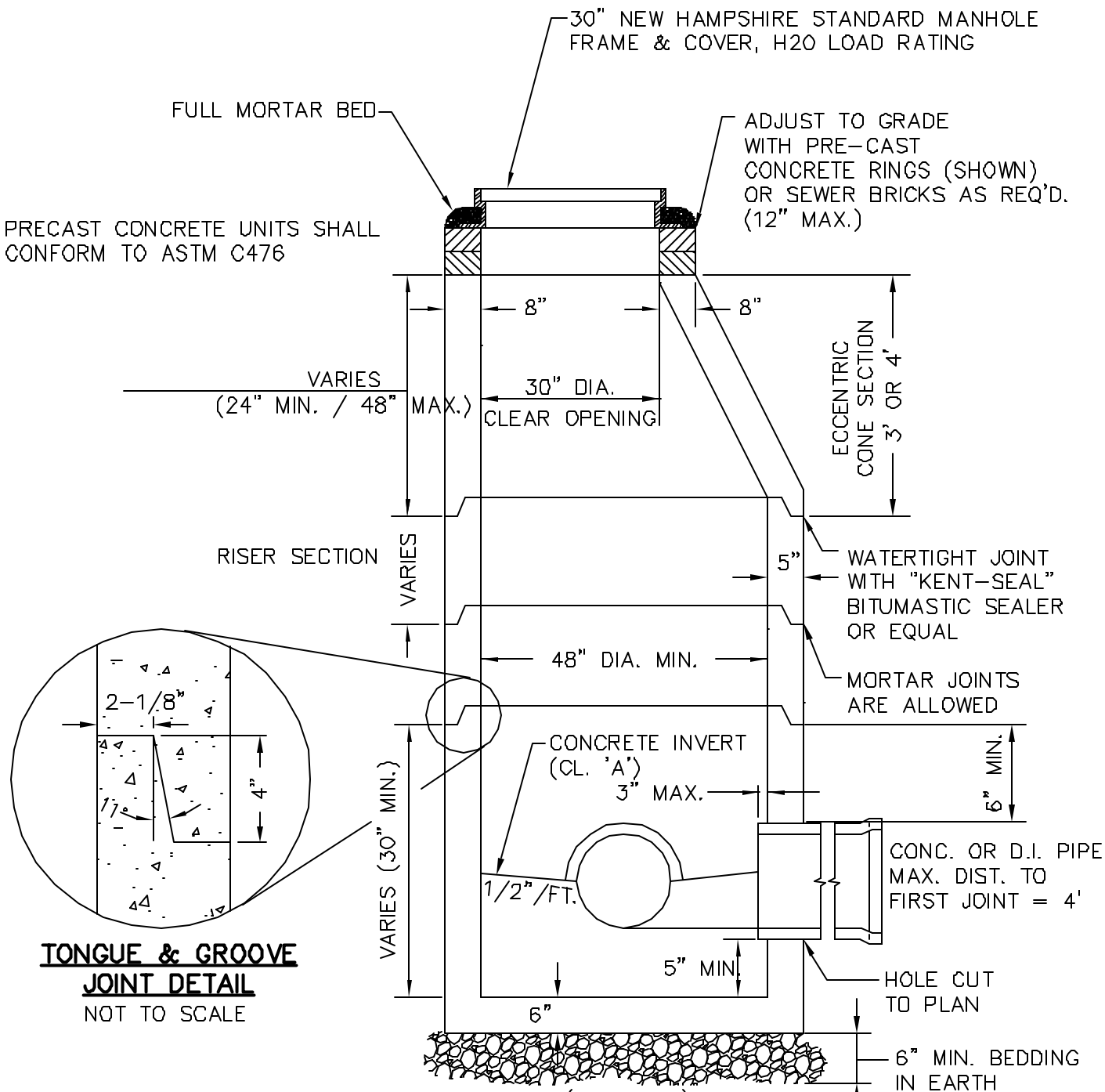

TONGUE & GROOVE JOINT DETAIL
NOT TO SCALE

ALL SECTIONS SHALL BE CONCRETE, CLASS AA, (4,000 PSI), CIRCUMFERENTIAL REINFORCEMENT SHALL BE 0.12 SQ. IN. PER L.F. IN ALL SECTIONS AND SHALL BE PLACED IN THE CENTER THIRD OF THE WALL.

THE TONGUE OR GROOVE OF THE JOINT SHALL CONTAIN ONE LINE OF CIRCUMFERENTIAL REINFORCEMENT EQUAL TO 0.12 SQ. IN. PER L.F.

RISERS OF 1'-4" MAY BE USED TO REACH THE DESIRED ELEVATION.

STEPS ARE NOT ALLOWED.

PRE-CAST REINFORCED CONCRETE DRAIN MANHOLE

S:\DWG\DETAILS\604-1 DMH.DWG

NOT TO SCALE
FIGURE 604-1

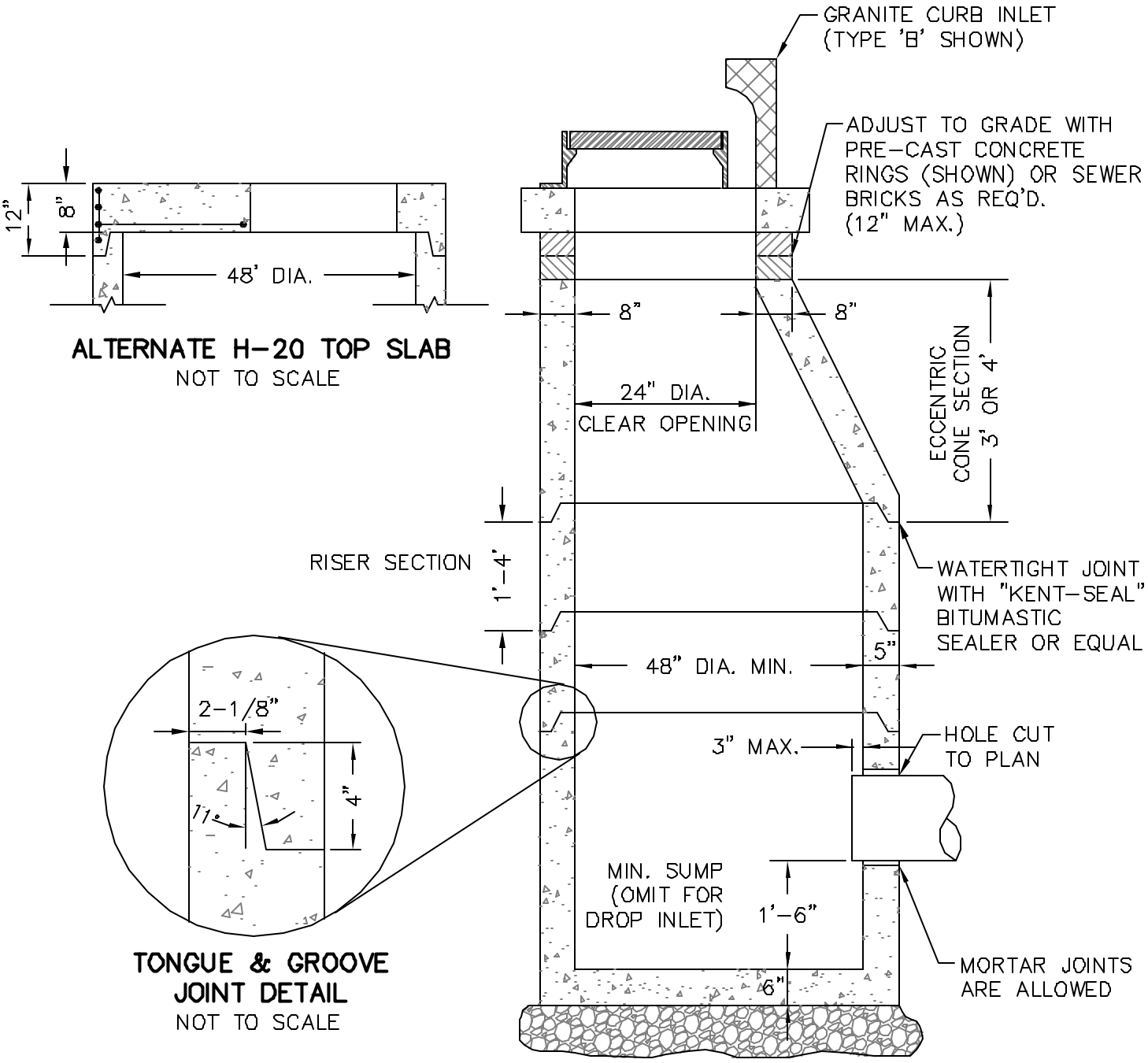

ALL SECTIONS SHALL BE CONCRETE, CLASS AA, (4,000 PSI), CIRCUMFERENTIAL REINFORCEMENT SHALL BE 0.12 SQ. IN. PER L.F. IN ALL SECTIONS AND SHALL BE PLACED IN THE CENTER THIRD OF THE WALL.

THE TONGUE OR GROOVE OF THE JOINT SHALL CONTAIN ONE LINE OF CIRCUMFERENTIAL REINFORCEMENT EQUAL TO 0.12 SQ. IN. PER L.F.

RISERS OF 1'-4' MAY BE USED TO REACH THE DESIRED ELEVATION.

STEPS ARE NOT ALLOWED.

PRE-CAST REINFORCED CONCRETE CATCH BASIN & DROP INLET

S:\DWG\DETAILS\604-2 CB.DWG

NOT TO SCALE

FIGURE 604-2

NOTES:

SQUARE GRATE & FRAME (CAST IRON) HORIZONTAL BARS TO BE PARALLEL TO FLOW LINE.

GRIND GRATE CORNER TO PERMIT USE IN EXIST. $1\frac{1}{4}$" X $1\frac{1}{4}$" FILLETED FRAMES.

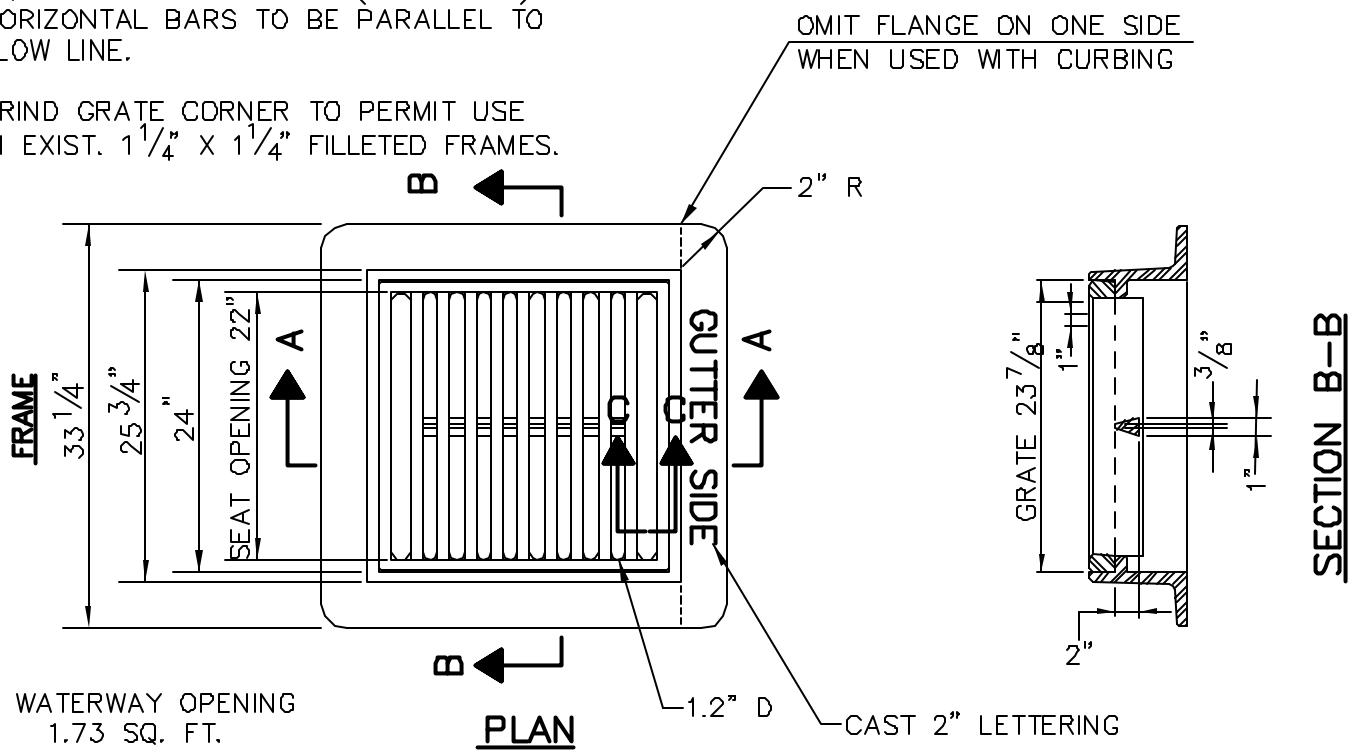

WATERWAY OPENING
1.73 SQ. FT.

PLAN

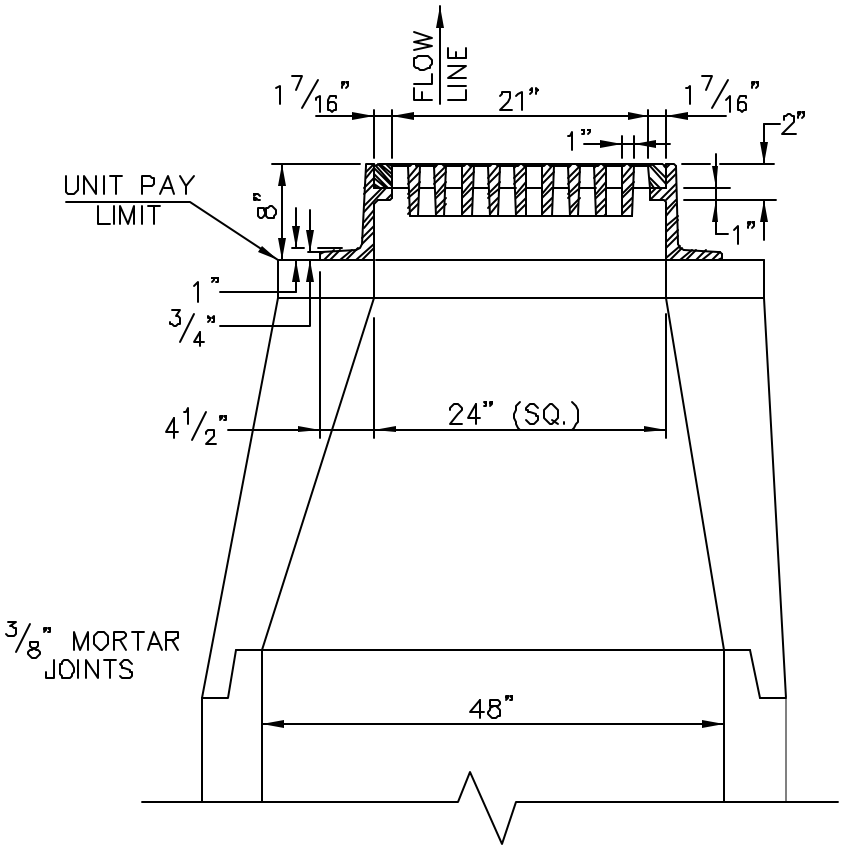

SECTION A–A

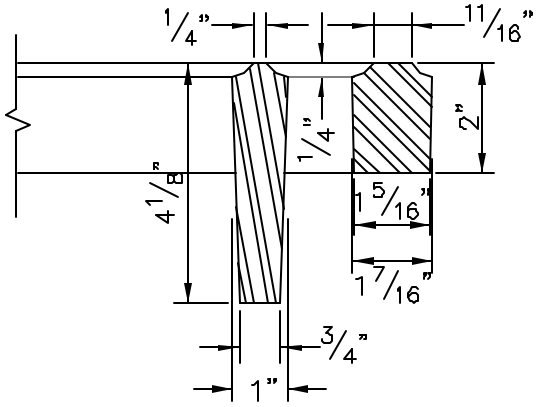

GRATE SECTION
C–C

NOTE: NOT TO BE USED WHEN BICYCLE TRAFFIC IS ANTICIPATED.

FRAME & GRATE TYPE 'A'

S:\DWG\DETAILS\604-3 FR&GRT-A.DWG

NOT TO SCALE
FIGURE 604–3

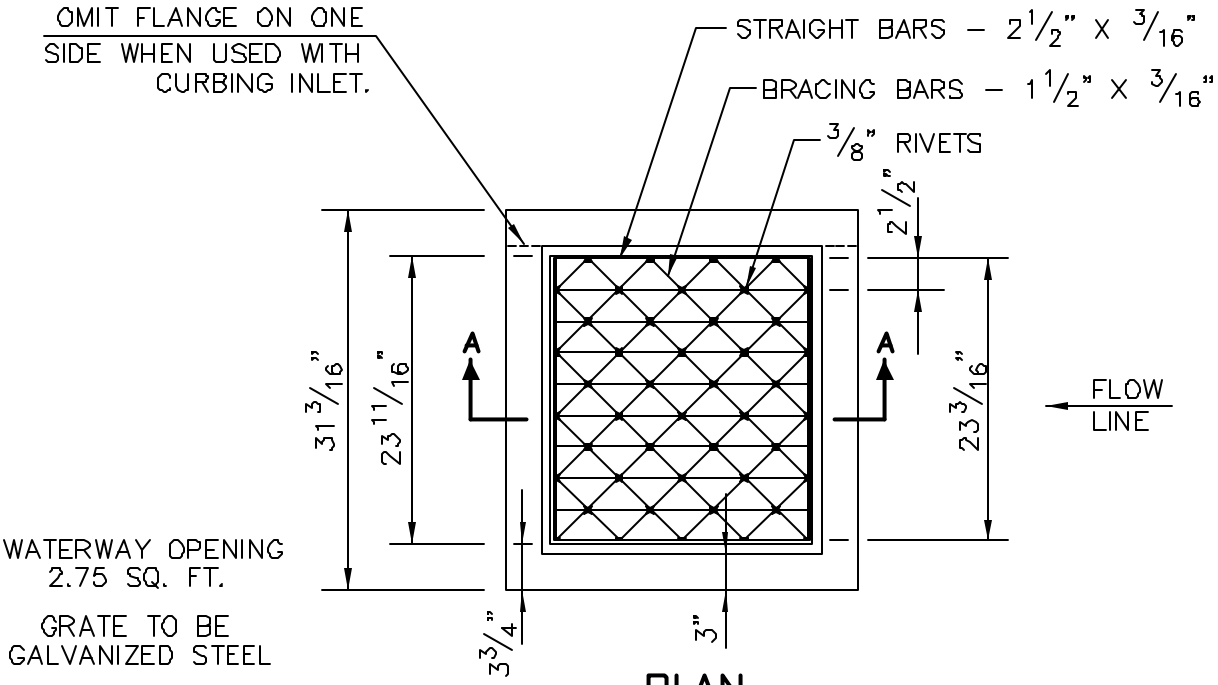

PLAN

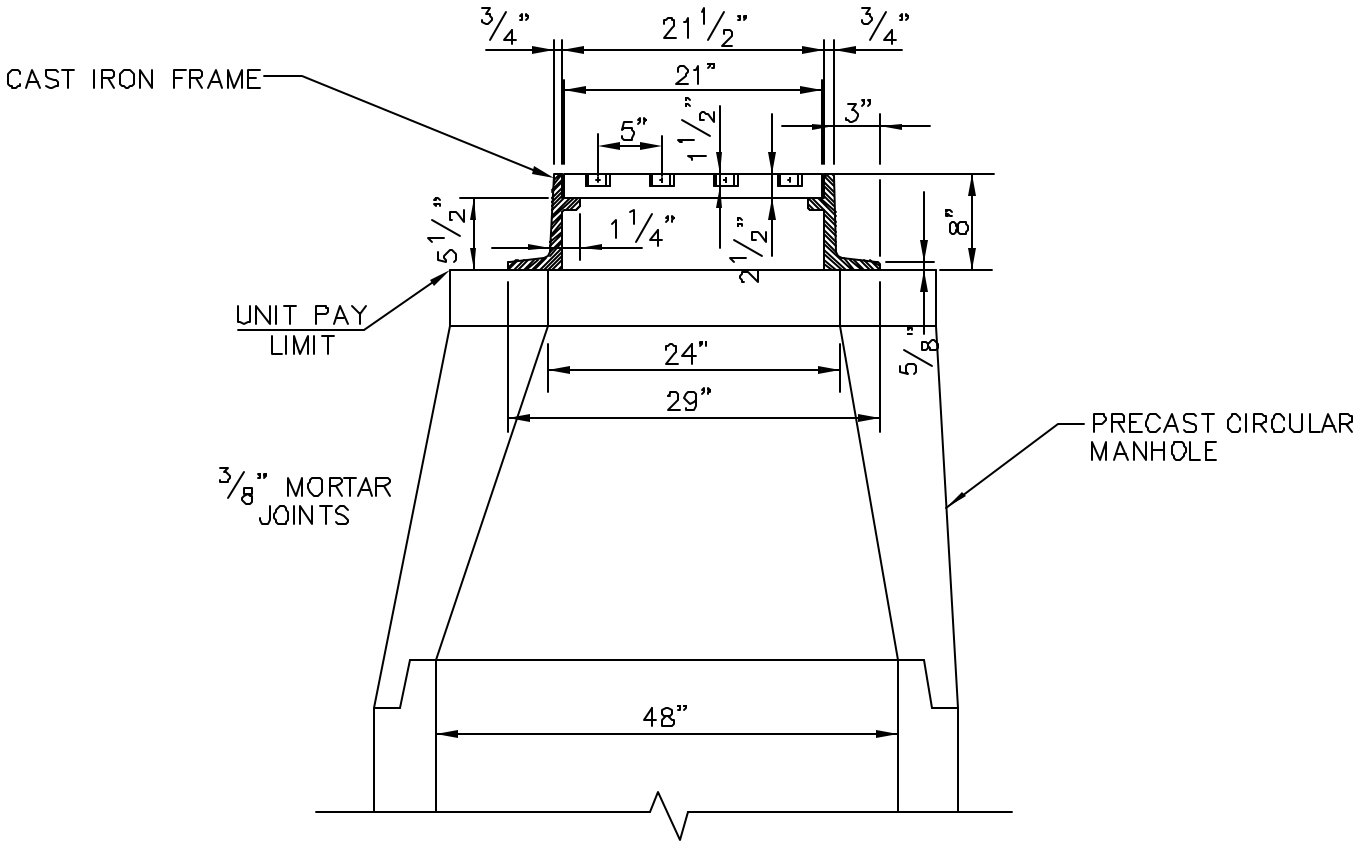

SECTION A–A

NOTE: USE WHERE BICYCLE AND/OR VEHICLE TRAFFIC CROSSES GRATE.

FRAME & GRATE TYPE 'B'

S:\DWG\DETAILS\604-4 FR&GRT-B.DWG

NOT TO SCALE

FIGURE 604-4

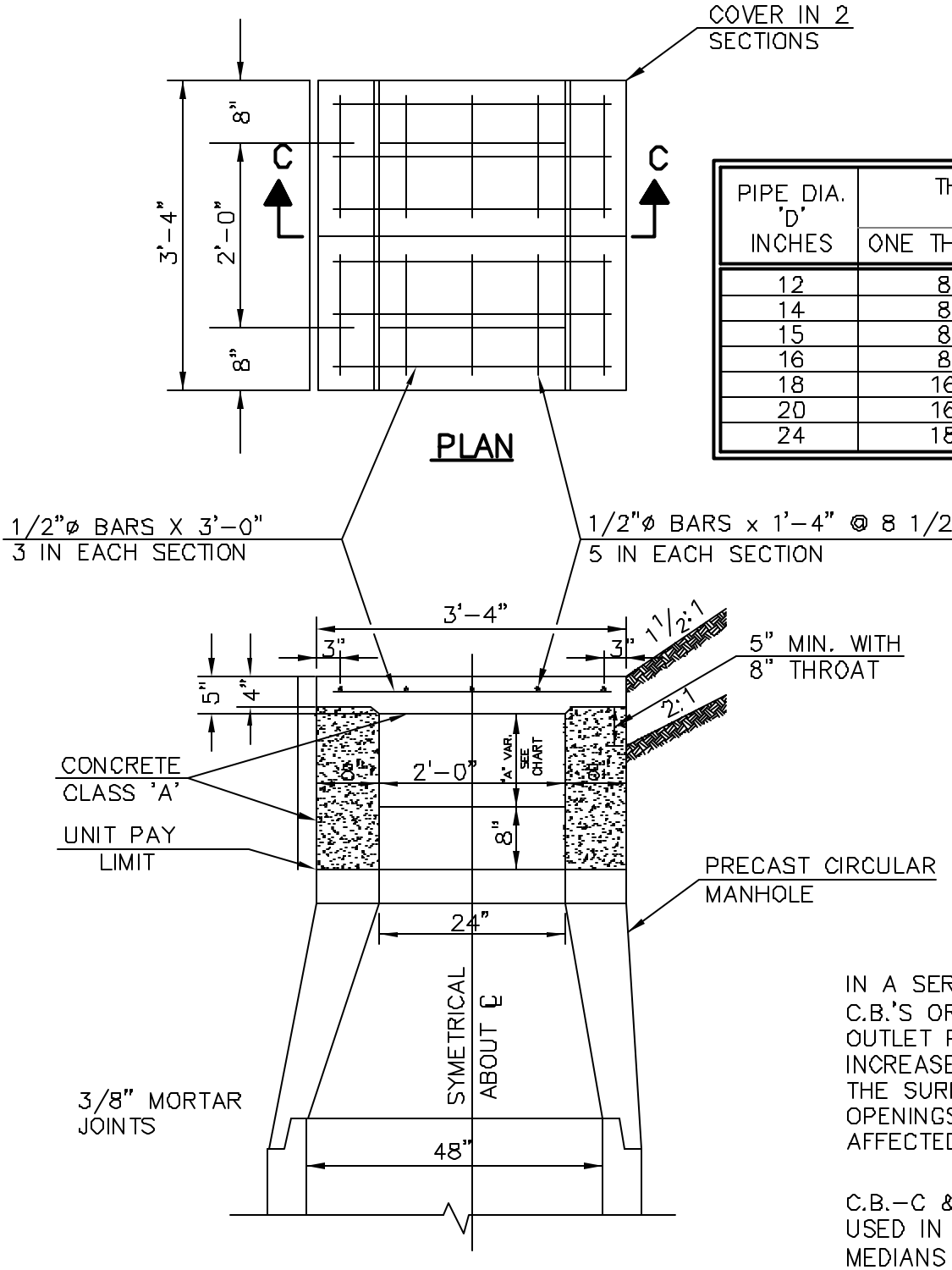

PIPE DIA. 'D' INCHES	THROAT DEPTH 'A' INCHES	
	ONE THROAT	TWO THROAT
12	8	8
14	8	8
15	8	8
16	8	8
18	16	8
20	16	9
24	18	16

IN A SERIES OF CONNECTING C.B.'S OR D.I.'S, THE OUTLET PIPES MAY INCREASE IN DIAMETER, BUT THE SURFACE THROAT OPENINGS ARE NOT AFFECTED.

C.B.-C & D.I.-C NOT TO BE USED IN DITCH LINES OR MEDIANS WITHIN 30' FROM EDGE OF PAVEMENT. TO BE USED ONLY AT LOCATIONS WHERE IT IS IMPOSSIBLE TO BE HIT BY VEHICLES.

CATCH BASIN TOP TYPE 'C'

S:\DWG\DETAILS\604-5 FR&GRT-C.DWG

NOT TO SCALE

FIGURE 604-5

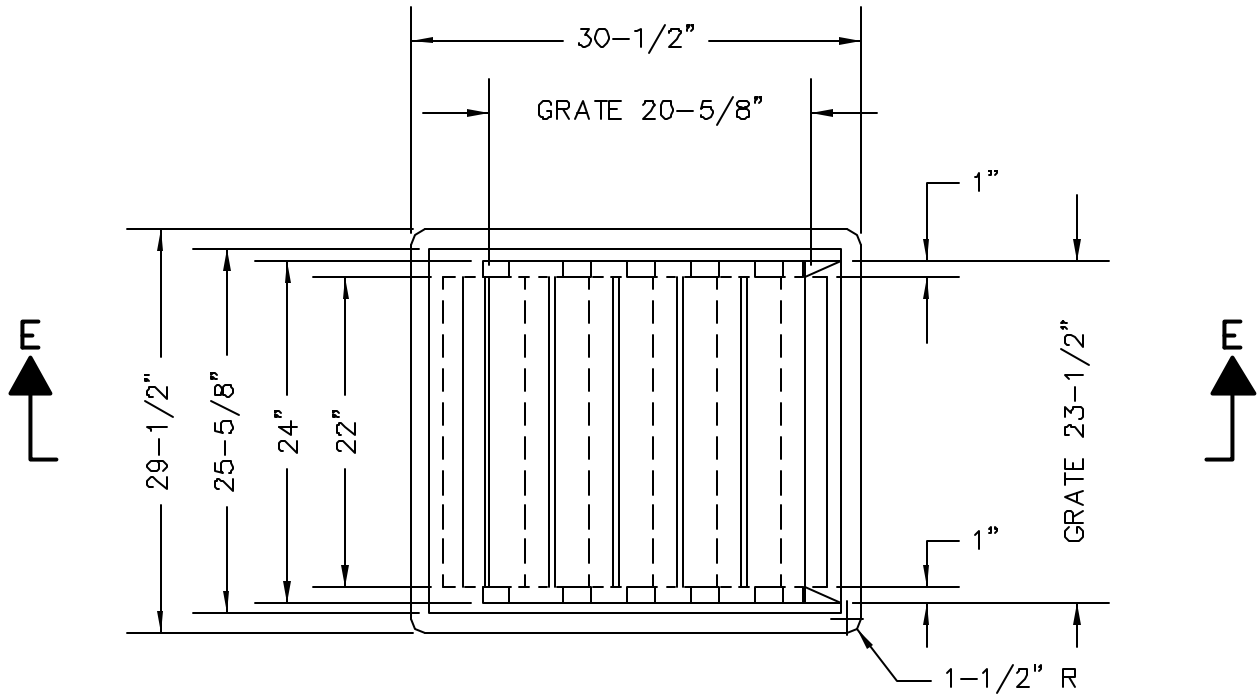

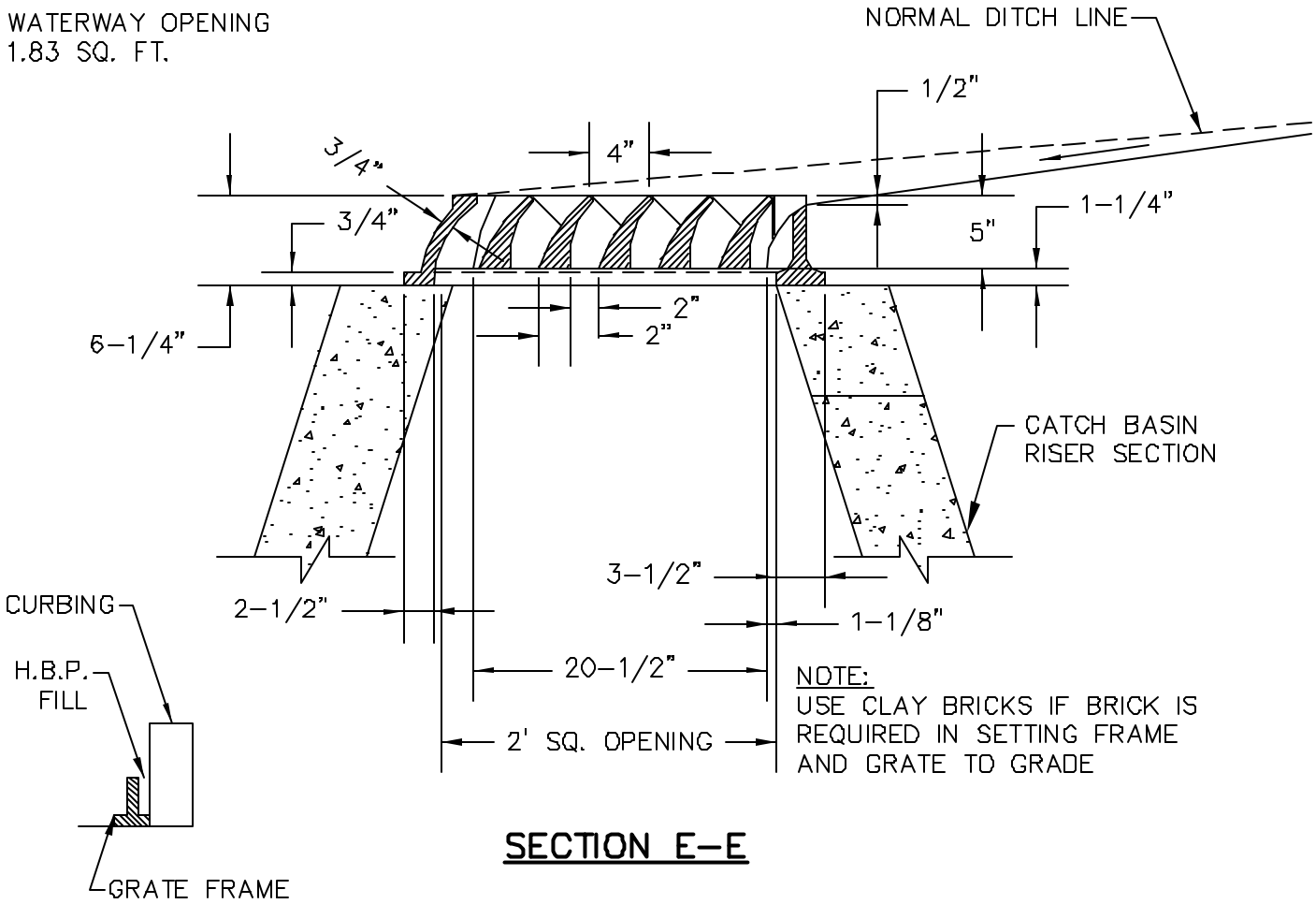

NOTE:
USE CLAY BRICKS IF BRICK IS REQUIRED IN SETTING FRAME AND GRATE TO GRADE

SECTION E-E

WHEN USED WITH CURBING

FRAME & GRATE TYPE 'E'

S:\DWG\DETAILS\604-6 FR&GRT-E.DWG

NOT TO SCALE

FIGURE 604-6

NOTES:

GRATE TYPE 'F' TO BE USED WITH CB TYPE 'A' FRAME.

USE ON STEEP GRADES WHERE HIGH CAPACITY IS NEEDED AND BICYCLE TRAFFIC IS ANTICIPATED.

WATERWAY AREA = 2.08 SQ. FT.

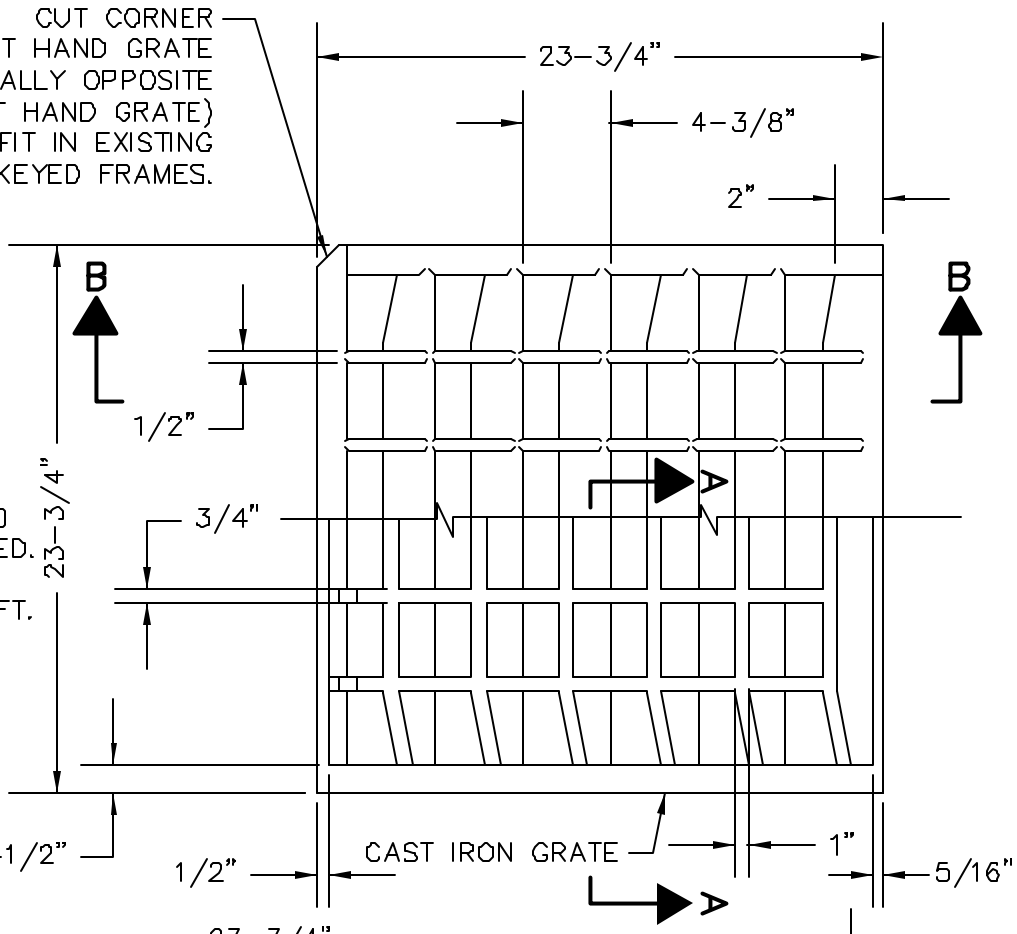

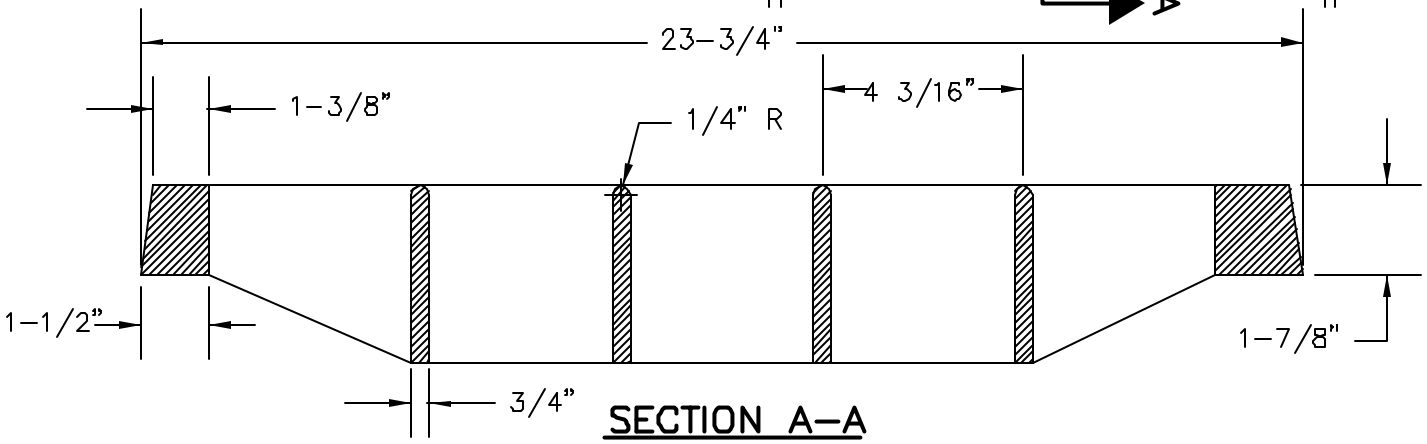

SECTION A-A

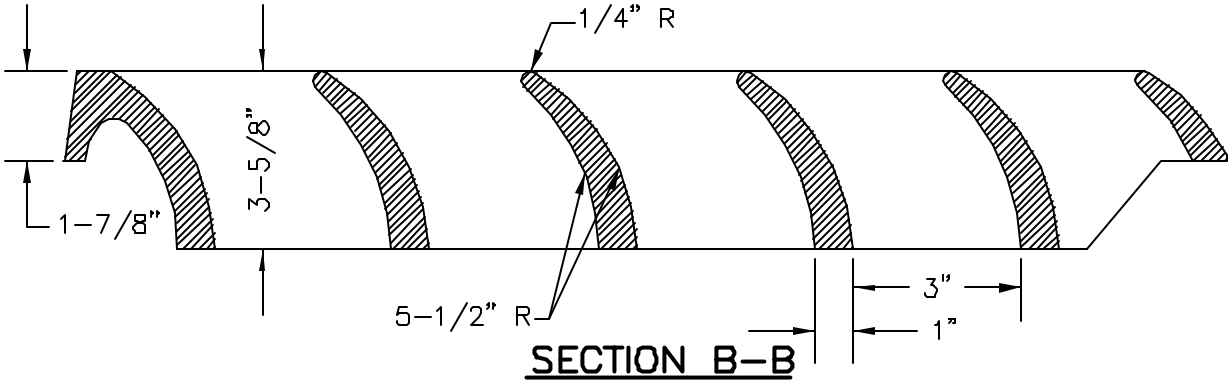

SECTION B-B

FRAME & GRATE TYPE 'F'

S:\DWG\DETAILS\604-7 FR&GRT-F.DWG

NOT TO SCALE

FIGURE 604-7

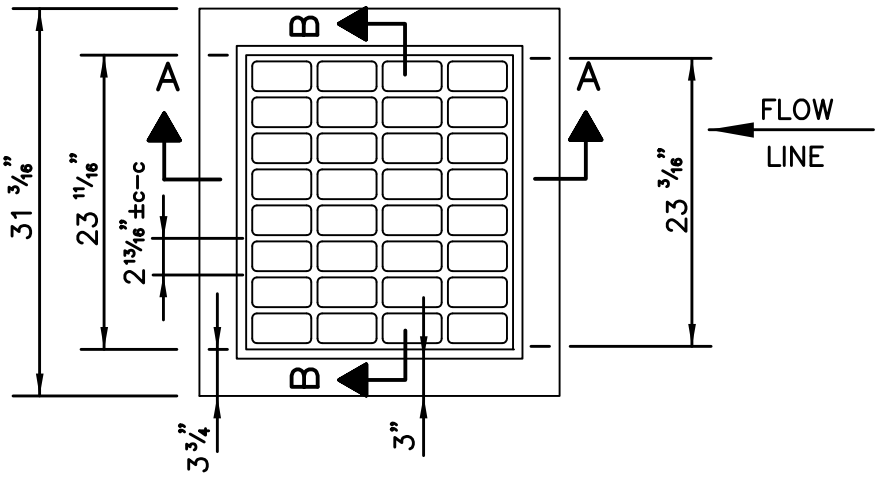

PLAN

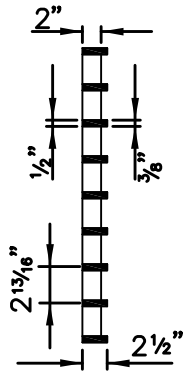

SECTION B–B

WATERWAY OPENING
2.55 SQ. FT.

GRATE TO BE
CAST IRON

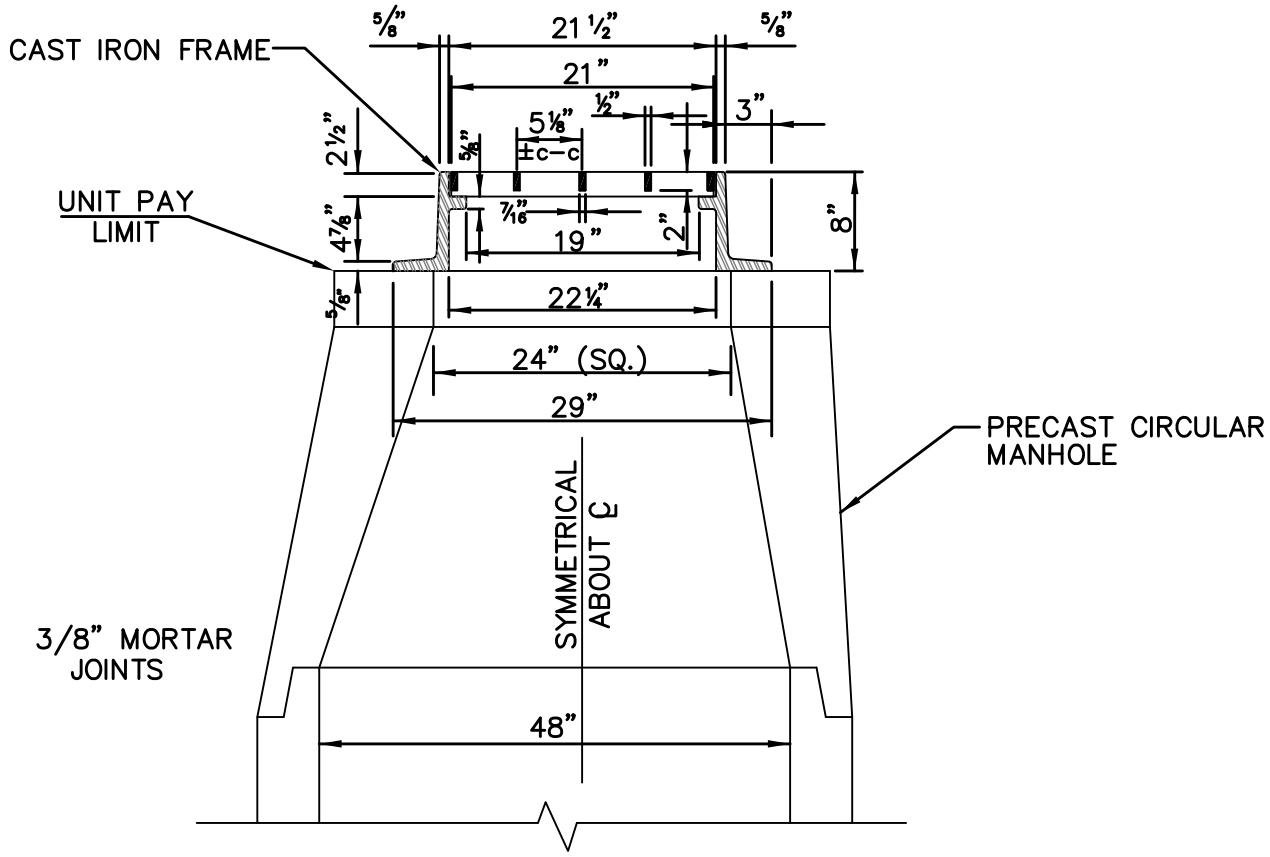

SECTION A–A

FRAME & GRATE TYPE 'B'–ALTERNATE 1

S:\DWG\DETAILS\604–8 FR&GR–BA.DWG

NOT TO SCALE
FIGURE 604–8

FRAME AND GRATE (CAST IRON)

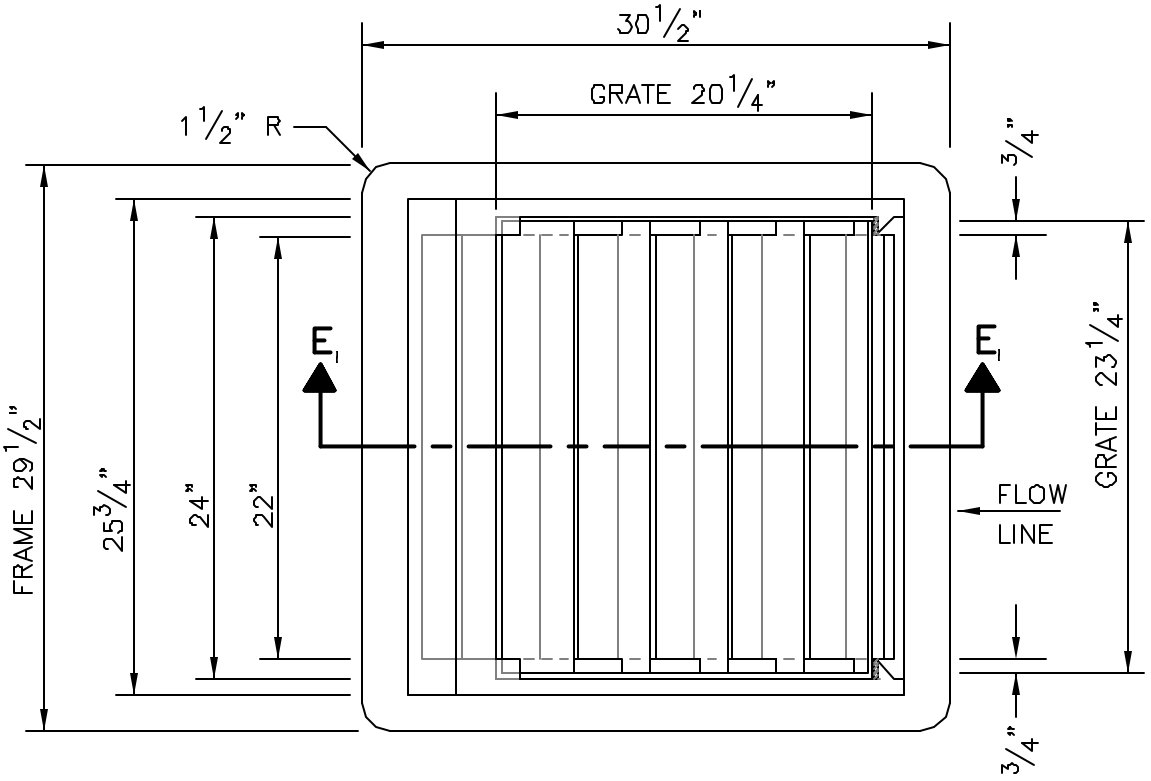

WATERWAY OPENING
1.98 SQ. FT.

PLAN

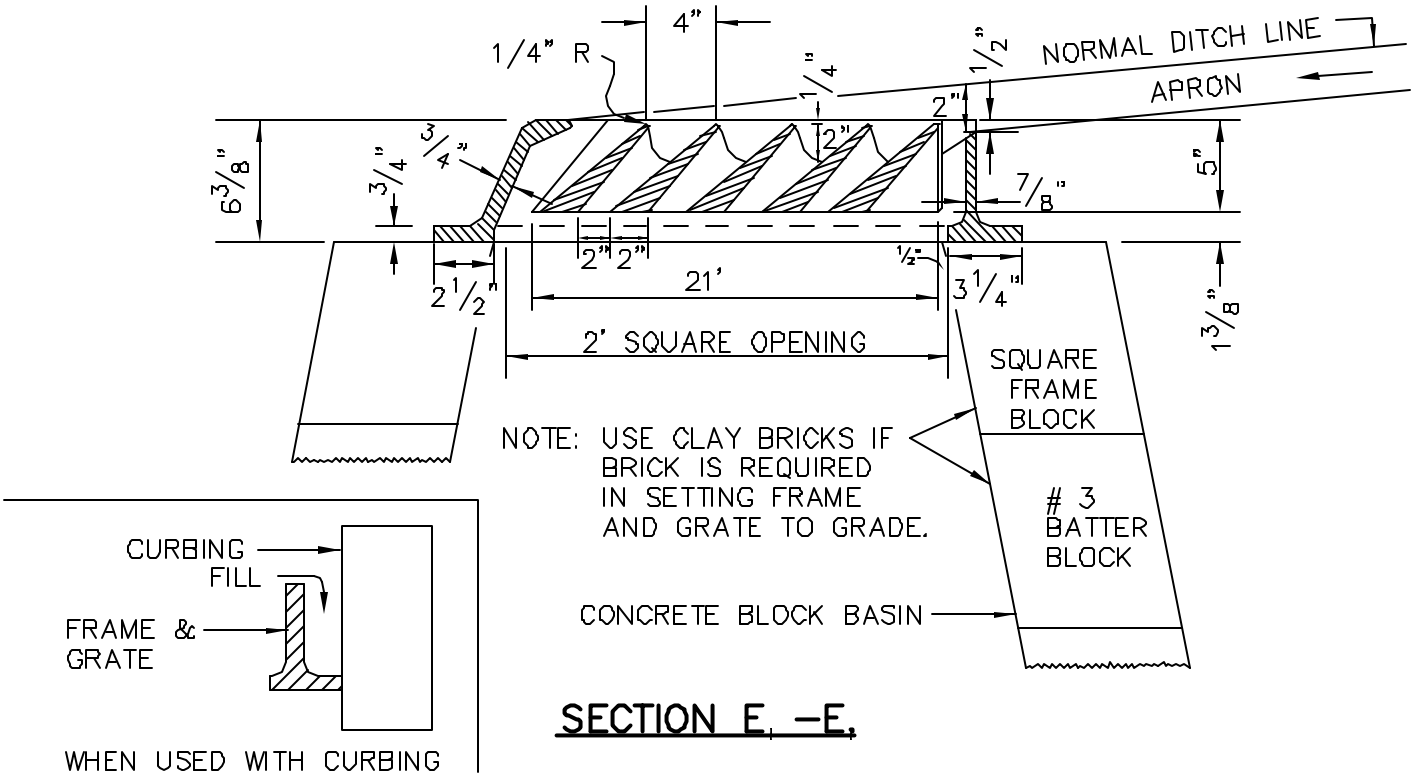

SECTION E1 –E1

FRAME & GRATE TYPE 'E'–ALTERNATE 1

S:\DWG\DETAILS\604-9 FR&GR-EA.DWG

NOT TO SCALE
FIGURE 604–9

CONCRETE CLASS 'A' (4,000 LBS.
MIN. COMP. STRENGTH PER SQ. IN.)

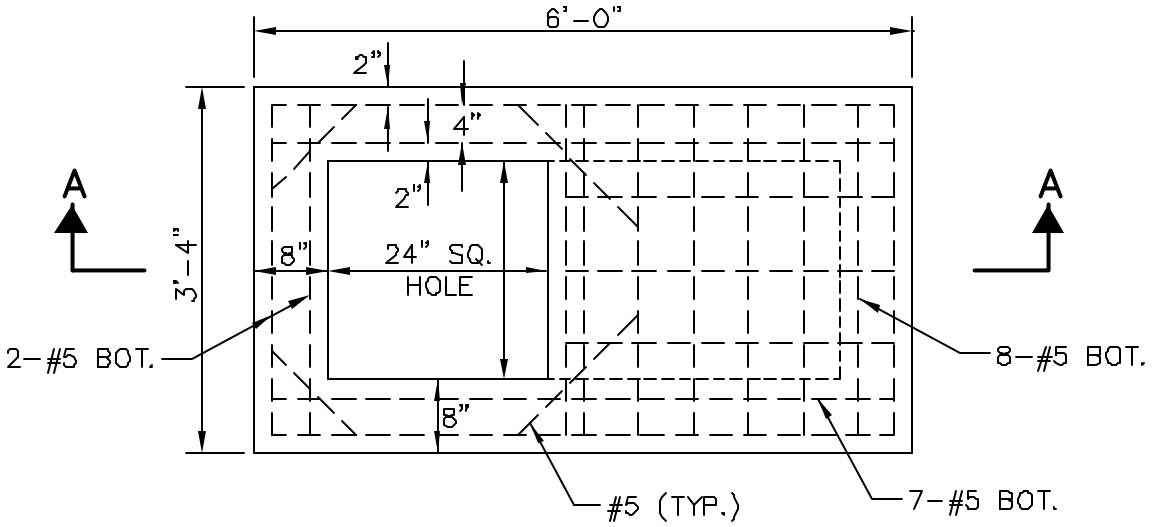

ALL REBAR TO HAVE
MIN. 2" CLEAR COVER

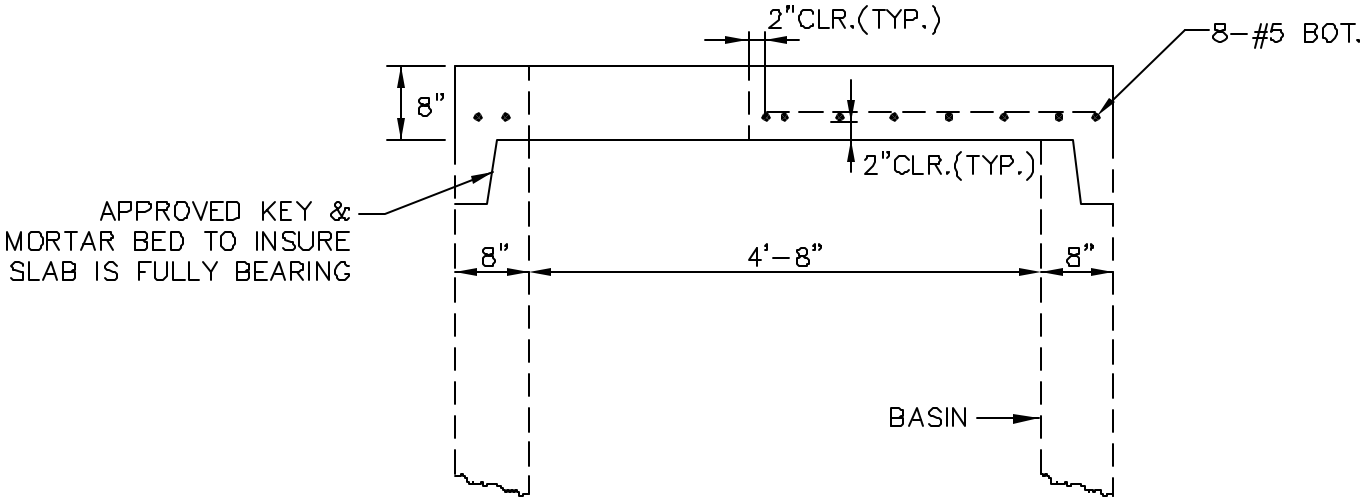

SECTION A-A

RECTANGULAR CATCH BASIN
SLAB TOP - TYPE 'A'

S:\DWG\DETAILS\604-10 CBREC-A.DWG

NOT TO SCALE
FIGURE 604-10

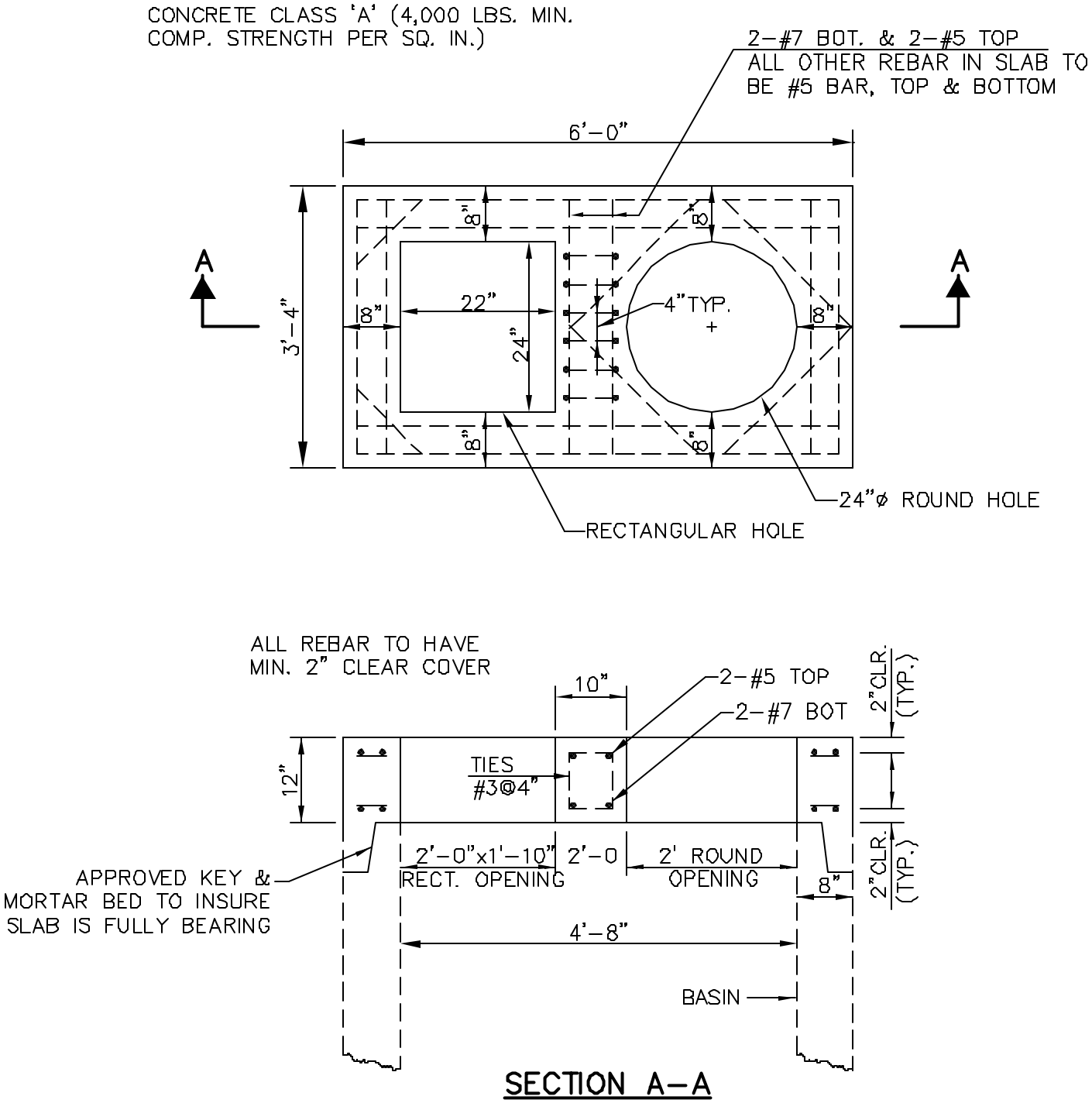

RECTANGULAR CATCH BASIN
SLAB TOP - TYPE 'B'

S:\DWG\DETAILS\604-11 CBREC-B.DWG

NOT TO SCALE
FIGURE 604-11

SECTION 605 -- UNDERDRAINS

Description

1.1 This work shall consist of furnishing (unless pipe is provided) and installing underdrains at the locations shown or ordered. Pipe, common structure excavation, sand cushion, and backfill shall be included in this work.

1.1.1 Furnishing and installing underdrain flushing basins as shown on the plans or ordered shall also be included in this work.

1.2 Aggregate underdrain shall consist of furnishing and installing support membrane, graded aggregate, pipe, if ordered, and common structure excavation, and backfill as necessary.

Materials

2.1 Perforated corrugated steel pipe and coupling bands shall conform to the applicable requirements of AASHTO M 36M/M 36, Type III. The minimum allowable thickness of metal of 6 inch underdrain pipe shall be 0.052 inches; the minimum allowable thickness of metal in underdrain pipe larger than 6 inches shall be 0.064 inches.

2.2 Perforated corrugated aluminum pipe and coupling bands shall conform to the applicable requirements of AASHTO M 197.

2.3 Smooth-walled perforated polyvinyl chloride pipe shall conform to AASHTO M 278. Perforated polyvinyl chloride profile wall pipe shall conform to AASHTO M 304.

2.4 Corrugated polyethylene drainage tubing 6 inch diameter shall conform to AASHTO M 252, with class 2 perforations except that the required pipe stiffness shall be a minimum of 60 psi. Perforated corrugated polyethylene pipe of nominal sizes 12 to 36 inch diameter shall conform to AASHTO M 294, with Class 1 perforations. Pipe length for all sizes shall not exceed 20 feet.

2.5 Pipe Underdrain, Materials Per Contractor's Option.

2.5.1 When the item reads 6 inch pipe underdrain (contractor’s option), it shall be the Contractor's option whether he furnishes perforated corrugated steel pipe, perforated corrugated aluminum pipe, perforated polyvinyl chloride pipe or perforated corrugated polyethylene drainage tubing.

2.6 Sand cushion shall be so graded that 90 to 100 percent
by weight will pass a 1/2 inch sieve, and not more than 15 percent will pass a No. 200 sieve.

2.7 Underdrain backfill shall meet the requirements of 209.2.1.

2.8 Flushing basin covers shall be gray iron conforming to AASHTO M 105, Class 30 unless otherwise specified.

2.9 Aggregate for aggregate underdrain shall conform to 703, AGGREGATES, TABLE 1 STANDARD SIZE #4.

2.10 Support membrane shall be nonwoven and conform to 593.2.1.

Construction Requirements

3.1 Trenches shall be excavated to the dimensions and grade shown or ordered. A minimum 2 inch sand cushion in common excavation and a 6 inch sand cushion in rock excavation shall be placed in the bottom of the trench for its full width and length to the grade of the bottom of the pipe.

3.2 Perforated pipe shall normally be placed with the perforations down, and sections shall be securely joined with the appropriate couplings, fittings, or bands.

3.3 After the pipe installation has been inspected and approved, underdrain backfill material shall be placed to a height of 12 inches above the top of the pipe, care being taken not to displace the pipe. The remainder of the backfill material shall then be placed to the required height and compacted in lifts not to exceed 12 inches.

3.4 Pipes shall be laid with 45 degree bends where changes in direction are indicated on the plans.

3.5 Except at structures, up grade ends of all underdrain pipe installations shall be closed with suitable plugs to prevent entry of soil material.

3.6 Flushing Basins.

3.6.1 Flushing basins shall be installed approximately 2 feet beyond the break in the shoulder and in such manner as to allow the basin cover to be set within the slope limits.

3.6.2 Any excavation required to install flushing basins shall be done in accordance with 3.1.

3.6.3 Additional 6 inch pipe shall be added to the elbow to bring the riser to the required elevation.

3.6.4 After the fitting and 6 inch riser pipe installation has been inspected and approved, underdrain backfill material shall be placed and properly compacted to a height which will allow

for the proper installation of the 2 foot section of 8 inch riser and cover. The remainder of the backfill and base course necessary shall then be placed to the required height and compacted. Care shall be taken to prevent backfill material from entering the riser pipes.

3.6.5 Basin covers shall be press-fit onto the 8 inch riser pipe.

3.6.6 Flushing basins and the related underdrain system shall be tested prior to acceptance.

3.7 Aggregate Underdrains.

3.7.1 Trenches shall be excavated to the dimensions shown or ordered. Type 1 aggregate underdrain shall have a 6 inch by ten foot section of pipe at the outlet end of each section of underdrain. Type 2 shall include pipe of the specified diameter throughout.

3.7.2 Nonwoven support membrane shall be installed so as to minimize the number of fabric seams within the trench section. Seams shall be constructed by overlapping the fabric at least 12 inches and folding to create a joint which will ensure that soil infiltration will be retarded.

3.7.3 Aggregate shall be placed within the typical section as shown in a manner that will maintain the fabric integrity. Punctures created by aggregate, equipment, tools or improper handling shall be patched by placing fabric at least 12 inches beyond the puncture limits on the outside of the typical section.

3.7.4 Pipe, as required, shall be laid to grade as ordered.

3.7.5 Backfill shall be placed and tamped in the areas outside and adjacent to the aggregate underdrain so that the shape of the typical is maintained. Sharp pieces of rock shall not be placed immediately adjacent to the fabric.

3.7.6 When rock is encountered, sharp projections of solid rock shall be removed within the typical section, primarily at the bottom of the trench.

Method of Measurement

4.1 Underdrains will be measured by the linear foot to the nearest 0.1 of a foot along the centerline of the pipe.

4.1.1 Aggregate underdrain will be measured by the linear foot, to the nearest 0.1 of a foot along the centerline of the aggregate underdrain.

4.2 When the item of borrow is included in the contract, no deduction will be made from borrow for the quantity of backfill or cushioning material obtained from the sectioned area; the quantity of backfill or cushioning material furnished from nonsectioned areas will be added to

borrow. When no quantity for borrow is included in the contract, backfill or cushioning material furnished will be subsidiary.

4.3 Underdrain flushing basins will be measured by the number of units installed.

4.3.1 Each unit shall include all required riser pipe, elbow or other fittings, cover and backfill material as required.

Basis of Payment

5.1 The accepted quantities of underdrain will be paid for at the contract unit price per linear foot complete in place, including common structure excavation, sand cushion and backfill.

5.1.1 Payment will not be made for 45 degree bends.

5.1.2 Rock excavation will be paid for under Item 206.2.

5.2 The accepted quantity of underdrain flushing basins will be paid for at the contract unit price per each complete in place, including common structure excavation and backfill.

5.3 The accepted quantities of aggregate underdrain of the type specified will be paid for at the contract unit price per linear foot in place, including common structure excavation and backfill.

5.3.1 Payment will not be made for fabric used for patching.

5.3.2 Excavation required will be paid for as provided in 5.1.2.

Pay items and units:

605.1__	__ inch Perforated Corrugated Steel Pipe Underdrain	Linear Foot
605.4__	__ inch Perforated Polyvinyl Chloride Pipe Underdrain	Linear Foot
605.5__	__ inch Perforated Corrugated Polyethylene Pipe Underdrain	Linear Foot
605.79	Underdrain Flushing Basins	Each
605.81A	__ Aggregate Underdrain Type 1	Linear Foot
605.82ABC	__ Aggregate Underdrain Type 2, With _____Pipe	Linear Foot
605.84015	1-1/2 inch PVC Plastic Horizontal Drains	Linear Foot
605.906	6 inch Pipe Underdrain (Contractor's Option)	Linear Foot

Notes:

A = Width of Underdrain

1=18" 2=24" 3=30" 4=36"

B = Type of Material

1 = Perforated Corrugated Steel
2 = Blank
3 = Perforated Corrugated Aluminum
4 = Perforated Polyvinyl Chloride
5 = Perforated Corrugated Polyethylene

C = Diameter of Pipe

1=6" 2=12" 3=18" 4=24"

Examples:

605.82311	30 inch Aggregate Underdrain Type 2, with Perforated Corrugated Steel 6inch Pipe
605.906	6 Inch Pipe Underdrain (Contractor's Option)

UNDERDRAIN
"L" HEADWALL

CONCRETE	NO. U.L.-1
MOR.RUB.MAS.	NO. U.L.-3

CONCRETE CLASS 'A'

D DIA. R.C.P. CULV.	H HEADER HEIGHT	MASONRY IN "L" - C.Y. FOR 6" UND.	FOR 12" UND.
15"	4'-3"	.30	.27
18"	4'-6"	.32	.29
24"	3'-0"	.36	.33
30"	5'-6"	.40	.37
36"	6'-0"	.43	.40

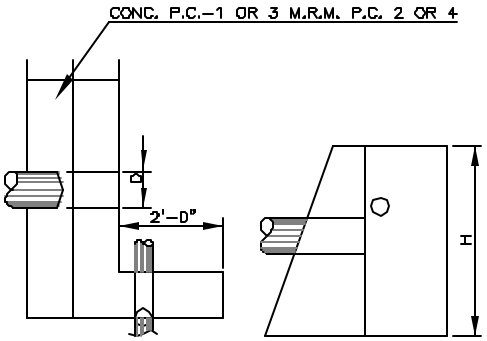

PLAN ELEVATION

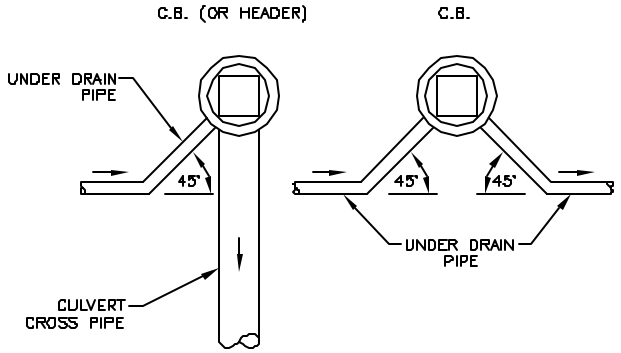

PLAN VIEWS

DETAIL FOR 45° BENDS IN UNDERDRAIN PIPES

UNDERDRAIN
HEADWALL

DIMENSIONS SHOWN ARE TO PAYMENT LINES. MORTAR RUBBLE MASONRY TO BE STEPPED OUTSIDE PAYMENT LINES ON SLOPING FACE. CONCRETE CLASS 'A'

CONCRETE	NO. U.H.-1
MOR.RUB.MAS.	NO. U.H.-2

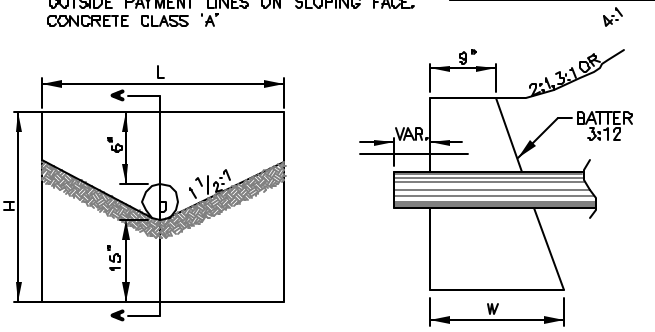

ELEVATION SECTION A-A

D UND. DIA. IN.	PER HEADER MAS'RY C.Y.	EXC. PER 1' DEPTH C.Y.	L FT.-IN.	H FT.-IN.	W IN.
6	.17	.49	2-0	2-3	15 3/4
12	.32	.65	3-2	2-9	17 1/2
15	.43	.76	3-10	3-0	18

CONCRETE	NO. U.L.-2
MOR.RUB.MAS.	NO. U.L.-4

D UND. DIA. IN.	ANG. DEG.	PER HEADER MAS'RY C.Y.	EXC. PER 1' DEPTH C.Y.	L FT.-IN.	H FT.-IN.	W IN.
6	90	.30	.71	1-3	2-3	15 3/4
6	120	.26	.65	1-3	2-3	15 3/4
6	135	.25	.62	1-3	2-3	15 3/4
12	90	.54	.95	2-0	2-9	17 1/2
12	120	.49	.87	2-0	2-9	17 1/2
12	135	.47	.84	2-0	2-9	17 1/2
15	90	.72	1.10	2-6	3-0	18
15	120	.66	1.02	2-6	3-0	18
15	135	.64	.99	2-6	3-0	18
18	90	.85	1.20	2-9	3-3	18 3/4
18	120	.79	1.11	2-9	3-3	18 3/4
18	135	.77	1.01	2-9	3-3	18 3/4
24	90	1.25	1.46	3-6	3-9	20 1/4
24	120	1.18	1.37	3-6	3-9	20 1/4
24	135	1.14	1.39	3-6	3-9	20 1/4

DIMENSIONS SHOWN ARE TO PAYMENT LINES. MORTAR RUBBLE MASONRY TO BE STEPPED OUTSIDE PAYMENT LINES ON SLOPING FACES.

UNDERDRAIN NO. U.D.-1

*WHICHEVER CONTROL RESULTS IN THE GREATER DEPTH WILL APPLY.

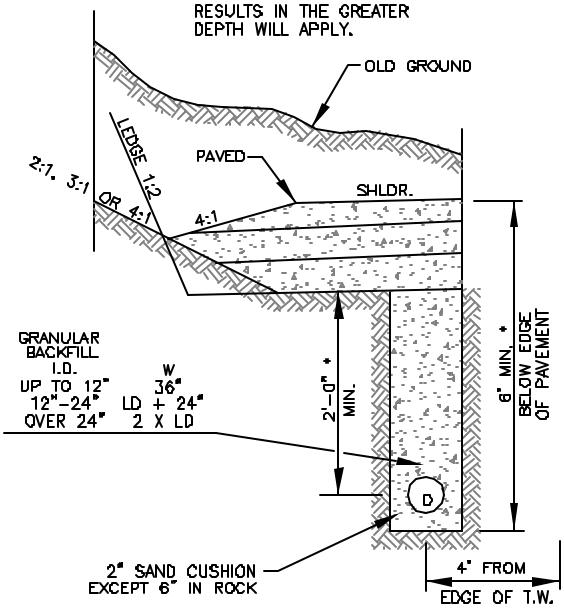

UNDERDRAIN
"L" HEADWALL

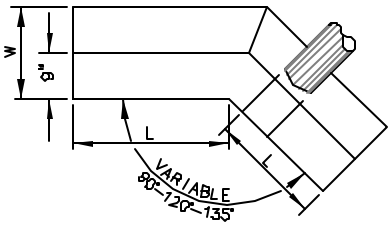

PLAN

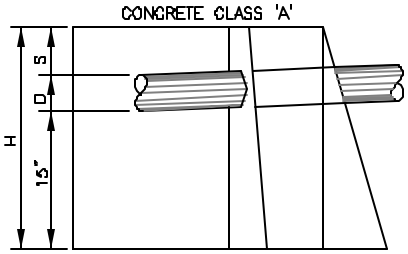

ELEVATION

UNDERDRAIN HEADWALLS & UNDERDRAIN 'L' HEADWALLS

S:\DWG\DETAILS\605-1 UNDER-DRN.DWG

NOT TO SCALE

FIGURE 605-1

SECTION 606 -- GUARDRAIL

Description

1.1 This work shall consist of furnishing and installing guardrail, anchorages, terminal units and concrete barriers of the type specified at the locations shown on the plans or as ordered.

1.1.1 Resetting of existing guardrail shall be included in this work.

1.1.2 Temporary guardrail and temporary concrete barrier shall consist of furnishing, maintaining and removing rail as specified.

Materials

2.1 Wood Posts and Rails.

2.1.1 Wood posts shall be of seasoned stock, sound and reasonable straight. The ends shall be cut square or as indicated. Posts with hollow knots, open or plugged holes, or season checks exceeding 1/4 inch in width will be rejected.

2.1.1.1 Round posts shall be one of the following species: ash, beech, birch (except gray), elm, hickory, locust, maple, oak, cedar, red pine, pitch pine, tamarack, southern yellow pine, or Douglas fir. The use of other species will be permitted only upon written approval. All bark shall be removed, knots shall be closely trimmed, and surface shall be shaved smooth.

2.1.1.2 Dimensioned posts and blocks shall be made of timber with a stress grade of 1,200 psi or more for extreme fiber in bending in accordance with AASHTO M 168. All cuts and holes shall be made before preservative treatment.

2.1.2 Wood rails shall be spruce, southern yellow pine, red pine or Douglas fir unless otherwise permitted. The rails shall be well seasoned, straight and sound, free from loose knots and other defects, and shall be surfaced on all sides.

2.2 Preservative Treatment.

2.2.1 All wood posts and rails shall be treated with preservative materials conforming to the requirements of AASHTO M 133,

2.2.2 The type of treatment shall be one of the following:

Treatment	Minimum net retention, Pounds per cubic foot
Type A Pentachlorophenol	0.60 (dry salts)
Water-Borne Preservative	0.40

2.3 Steel posts. Steel posts shall conform to ASTM A 36 and shall be galvanized after fabrication to meet the requirements of AASHTO M 111.

2.4 Rails and Fittings for Beam Guardrail.

2.4.1 Steel rail elements, terminal sections, bolts, nuts, and other fittings shall conform to AASHTO M 180, Class A (except that paragraph 11, Marking, shall not apply). Steel shall be galvanized after fabrication with Type II coating. Rail elements and terminal sections shall be treated with a solution of sodium dichromate or other approved chemical solutions so as to prevent or reduce storage stain. Corrosion resistant steel shall conform to AASHTO M 180, Type IV.

2.4.2 Steel rail elements shall be shop punched to allow for 6 foot - 3 inch post spacing or as required. Where the rail is on a curve having a radius of 150 feet or less, the rail shall be shop curved. The plates at the splice shall make contact throughout the area of the splice. Guardrail parts furnished under this specification shall be interchangeable with similar parts, regardless of the source of manufacture.

2.4.3 The post bolt and connection shall withstand a 5,000 pound pull in either direction.

2.5 Anchor blocks. Anchor blocks shall be as shown on the plans.

2.6 Permanent Concrete Anchors and Barriers.

2.6.1 Concrete shall be Class AA conforming to 520.1.2. The cement shall be Type III Portland cement as specified in AASHTO M 85. Slump shall be closely controlled between 2 and 3 inches.

2.6.2 Reinforcing steel shall conform To 544.

2.6.3 Structural material including end connectors shall conform with the applicable portions of these specifications.

2.6.3.1 Galvanizing shall conform to AASHTO M 111.

2.6.4 Mortar for patching, when permitted, shall be composed of the exact ingredients of the concrete with the coarse aggregate omitted.

2.7 Delineators. Delineators shall conform to 621.

2.8 Handrail.

2.8.1 Steel pipe for rails and posts shall conform to ASTM A 53, Schedule 40, Standard Weight of the diameter shown on the details. Pipe shall be galvanized after fabrication in accordance with the requirements of AASHTO M111.

2.8.2 Grout for anchoring the pipe posts shall be Item 529.1 High strength, Impact Resistant, Non-shrinking grout.

Construction Requirements

3.1 Posts.

3.1.1 Wood posts shall be set plumb at the required locations by either excavating or driving. Round posts shall be set with butt ends down and without cutting the tops after treatment. The bottom of the holes shall be thoroughly tamped to grade. The face of the post nearest the road shall present a vertical line from the top to bottom.

3.1.2 Steel posts shall be driven to grade at the spacing required.

3.1.3 Post and anchor holes shall be backfilled with acceptable material placed in layers and thoroughly compacted with a power tamper.

3.2 Beam Rail.

3.2.1 Beam guardrail shall be erected to provide a smooth continuous rail conforming to the line and grade of the highway. Corrugated rail elements shall be lapped so that the exposed end of each element is away from approaching traffic. Tube-type beam elements shall be bolted and joined as shown on the plans. Expansion joint bolts shall be tightened, but only to a degree which will not prevent the rail elements from sliding past each other longitudinally. All other bolts shall be drawn tight.

3.2.2 All metal work shall be fabricated in the shop. No punching, cutting, or welding shall be done in the field. Holes may be drilled or cutting done for special details only.

3.2.3 Galvanized beam rail shall be stored to prevent wet storage stain. Storage shall be off the ground and individual rail elements shall be separated with spacers to provide free access of air. The beam rail shall be inclined in a manner which will provide continuous drainage.

3.2.4 All damage to galvanized surfaces, and threaded portions of all fittings and fasteners and cut ends of bolts after assembly, shall be repaired by thoroughly wire brushing the damaged area and painting it with 2 coats of zinc-rich primer 708-NH 1.60.

3.2.5 At each location where an electric transmission, distribution, or secondary line crosses any of the types of metal guardrail covered by these specifications, the guardrail shall be grounded as required by the electric utility company.

3.2.5.1 At locations where electric lines run parallel and in close proximity to metal fences, grounding systems may be required by the electric utility company.

3.2.6 All beam rail shall include refloctorized delineators, white or yellow, placed in accordance with *Standard No. 12*

3.3 Terminal sections. Terminal sections shall be installed at each end of every installation of corrugated beam guardrail unless otherwise specified.

3.4 Wood Rail. Wood rail shall be constructed as shown on the plans. Wood surfaces cut or injured shall be brush treated with 2 applications using material of the same specification as that used in the preservative treatment.

3.5 Resetting. The existing guardrail including anchorages shall be dismantled in a careful and workmanlike manner and suitably stored. Unless otherwise ordered, hardware and fittings shall be packed in substantial wooden boxes or kegs. New treated posts shall be substituted for all existing untreated posts. Material damaged due to the Contractor's negligence shall be replaced with new materials.

3.6 Temporary beam guardrail. Temporary beam guardrail shall be installed meeting the requirements of Item 606.140 except that posts may be of steel or wood.

3.7 Concrete Barriers.

3.7.1 General.

3.7.1.1 Concrete barriers shall be supplied to the configuration shown on the plans. Minor deviations in the shape may be submitted to the Engineer for approval.

3.7.1.2 Sections of barrier shall be uniform in color
and in good condition, free from cracked or spalled surfaces.

3.7.1.3 The layout of the concrete barriers will be as shown on the plans or as directed by the Engineer. Permanent barriers shall be placed at the elevation ordered on granular material

which has been compacted to 100% density in accordance with the applicable tests as specified in 304.3.5.

3.7.1.4 All concrete barriers shall include retroreflectorized delineators, white or yellow, placed in accordance with *Standard No.12*.

3.7.1.5 Shop drawings and working drawings shall be submitted in accordance with 105.02.

3.7.1.6 Form work shall be approved steel or wood, externally braced in like new condition without any projections or depressions which would detract from the required finish. Proper care and precautions shall be exercised in removing forms to ensure no damage results to the finished surface of the barrier.

3.7.1.7 Reinforcing steel shall be placed in accordance with 544.

3.7.2 Permanent Cast-in-Place Barriers.

3.7.2.1 Forms and subgrade shall be thoroughly moistened in conformance to 520.3. Care shall be taken that form construction has been completed, embedment of required materials placed and removal of all foreign materials completed before the concrete is placed.

3.7.2.2 Concrete shall be placed in its final position. Excessive movement of concrete by use of vibrators will not be permitted.

3.7.2.3 Concrete shall not be dropped a distance of more than 5 feet unless contained within a tremie, elephant trunk or other approved system.

3.7.2.4 Concrete shall be consolidated as provided in 520.3.5.4 by means of high frequency internal vibrators with 15 minutes after it is deposited in the forms. Vibrators shall not be attached to, or held against the forms or the reinforcing steel. Care shall be taken to avoid the displacement of reinforcement.

3.7.2.5 In the event of an emergency where placement continuity is affected, the Engineer will decide if a construction joint will be allowed and will direct the Contractor as to the location and manner in which the joint is to be constructed.

3.7.2.6 Concrete shall be cured in compliance with 520.3.10.1. Forms shall not be removed for a period of 3 days or as directed.

3.7.2 Precast Barriers.

3.7.2.1 Fabrication of precast units shall be performed by an approved commercial precasting plant. The provisions of 105.11 and 106.05 shall apply.

3.7.2.2 Fabrication inspection of the precast barrier will be performed by the Department. A concrete mix design shall be prepared by the manufacturer and approved by the Engineer prior

to fabrication. The Contractor shall notify the Engineer at least 72 hours before casting barriers so that the necessary arrangements may be made for the Engineer to be present for inspection of the casting. The casting date shall be shown on the bottom of each piece.

3.7.2.3 The length of individual precast sections shall not exceed 20 feet unless otherwise permitted. The length of individual sections of any one run shall be approximately the same. Precasting tolerance will allow no variations of more than 1/4 inch in any plan dimension.

3.7.2.4 Unless shown on the plans, the Contractor's proposed method for joining and anchoring the sections shall be submitted for approval. Steel shapes exposed to weathering shall be galvanized.

3.7.2.5 Compaction of the concrete into a dense uniform mass shall be accomplished by internal vibration to provide a smooth surface relatively free of voids. External vibration may be used when permitted.

3.7.2.6 Care shall be taken to insure that inserts including reinforcing steel remain in their proper locations. Ends of the individual sections shall be smooth and perpendicular to the top surfaces.

3.7.2.7 Curing. Concrete shall be water cured in compliance with 520. Water cured barrier shall not be shipped until the barrier has cured a minimum of 7 days. Steam curing of the barriers shall be as follows:

3.7.2.7.1 The Contractor shall furnish sufficient canvas and framework or other type of housing to completely enclose the concrete barrier sections so that the curing temperatures can be controlled.

3.7.2.7.2 Live steam shall be introduced into the enclosure through a series of steam jets which shall be evenly spaced within the enclosure and in no case shall the steam jet impinge directly on the concrete formwork.

3.7.2.7.3 The initial set of the concrete shall take place before steam is applied.

3.7.2.7.4 The steam shall be maintained at 100 percent relative humidity to prevent loss of moisture and to provide excess moisture for proper hydration of the cement.

3.7.2.7.5 During the application of the steam, the ambient air temperature shall increase at a rate not to exceed 40 degrees F per hour until a temperature of 160 degrees F is reached. Curing at 160 degrees F shall continue until concrete test cylinders, prepared at the time of placing, and cured under the same temperature and moisture conditions have attained 80 percent of the expected compressive strength.

3.7.2.7.6 Necessary equipment for testing the cylinders shall be available at the fabricator's plant unless permitted otherwise.

3.7.2.7.7 When discontinuing steam, the ambient air temperature shall not decrease at a rate exceeding 40 degrees F per hour until the temperature has reached 20 degrees F above the temperature of the air to which the concrete will be exposed.

3.7.2.7.8 The concrete shall not be exposed to temperatures below freezing for 6 days after casting.

3.7.2.7.9 The precast barrier shall not be moved until 24 hours after casting. The precast sections must be in the position and location for curing prior to removing forms The lifting hooks shall not be used to move the barrier until curing is complete. Handling shall at all times be performed in a manner to prevent damage to the concrete.

3.7.3 Portable concrete barrier for traffic control. Portable concrete barriers for traffic control shall include relocating the barriers on the project as well as transporting the barriers to and from the project.

3.8 Handrail.

3.8.1 Fabricate handrails to the dimensions and details shown on the plans.

3.8.1.1 Top railing shall be continuous throughout entire length of railing, except as noted in 3.8.4.

3.8.1.2 Interconnect handrail members by butt-welding or welding with internal fittings. Welding shall conform to ANSI/ AWS D 1.1 Chapter 10, Tubular Structures. At tee and cross connections notch ends of intersecting members to fit contour of pipe to which end is joined and
weld all around,

3.8.1.3 Form simple and compound curves by bending pipe in jigs to produce uniform curvature; maintain cylindrical cross-section of pipe throughout entire bend without buckling, twisting, cracking or otherwise deforming exposed surfaces of pipe.

3.8.2 The Contractor shall install the pipe and hardware for handrail as shown or ordered.

3.8.2.1 Anchor posts in preset sleeves or drilled holes. Sleeves or holes shall be not less than 12 inches deep with an inside diameter not less than 1/2 inch greater

than the outside diameter of the post. Sleeves shall have a steel plate closure welded to the bottom and a friction fit, removable cover designed to keep the sleeve clean and hold the 112 inch below the finished surface ~f concrete or mortar rubble masonry.

3.8.2.2 Set handrail accurately in location, alignment and elevation with edges and surfaces level, plumb and true. Fill annular space between posts and sleeve or holes with grout.

3.8.3 Damage to galvanized surfaces during erection shall be repaired by cleaning the damaged area as specified in 550.3.17.2, pretreating as specified in 550.3.17.7.1 and painting with 2 coats of zinc-rich primer, 708-NH 1.60. The second coat shall not be applied until the first coat has been approved.

3.8.4 Provide slip joint expansion joints, at intervals not to exceed 40 feet, located within 6 inches of posts. Slip joint shall be formed with an internal sleeve extending 2 inches beyond the joint on either side with the sleeve securely fastened to one side.

3.8.5 Handrail shall be installed in a timely manner to ensure pedestrian safety.

Method of Measurement

4.1 The accepted quantities of guardrail, new, temporary or reset, will be measured by the unit, or by the linear foot to the nearest 0.1 of a foot, as follows:

4.1.1 Corrugated beam guardrail indicated as "standard section" will be measured by the linear foot as shown on the plans. Terminal units and bridge approach units will each be measured by the unit.

4.1.2 Wood guardrail, pipe guardrail and double faced beam guardrail will be measured from end to end of rail by the linear foot. Measurement includes to end of terminal sections unless otherwise shown on the plans.

4.1.3 Handrail will be measured from end to end of rail by the linear foot, to the nearest 0.1 foot.

4.2 Anchorages shown on the plans as integral parts of terminal units paid for by the unit will not be measured separately; other anchorages as specified, both new and reset, will be measured by the number of units installed.

4.3 Measurement of the temporary beam guardrail and temporary terminal units of the type specified will be in accordance with 4.1.

4.4 The accepted quantities of concrete barrier, permanent or portable for traffic control, will be measured by the linear foot as follows:

4.4.1 Permanent concrete barrier will be measured by the foot to the nearest 0.1 of a foot from end to end along the top of the barrier section, as shown on the plans.

4.4.2 Portable concrete barrier for traffic control will be measured by the linear foot for barrier ordered and delivered to the project. Relocating portable concrete barriers on the project will not be measured.

4.5 Delineators will be measured in accordance with 621.4. Delineators required for portable concrete barrier for traffic control will not be measured.

Basis of Payment

5.1 The accepted quantities will be paid for at the contract unit price for terminal units and bridge approach units when separately specified, per linear foot for guardrail, and per each for anchorages other than anchorages included with terminal units for all types specified, complete and in place.

5.2 New material required for resetting guardrail, other than that damaged due to the Contractor's negligence, will be paid for as provided in 109.04.

5.3 The accepted quantity of permanent concrete barrier of the type specified and portable concrete barriers for traffic control will be paid for at the contract unit price per linear foot.

5.3.1 Mortar for patching joints between units on permanent concrete barriers will be subsidiary when required.

5.3.2 Miscellaneous steel for connecting individual units or end units will be subsidiary.

5.4 The accepted quantity of handrail will be paid for at the contract unit price per linear foot complete in place.

5.4.1 Grout will be subsidiary to handrail.

5.5 Delineators will be paid for in accordance with 621.5, except delineators required for portable concrete barrier for traffic control will be subsidiary.

KEY TO ITEM NUMBERS FOR GUARD RAIL ITEMS

Item Number		Unit
606.00C	Beams for Guardrail	Linear Foot
606.01A	Posts for Guardrail	Each

606.1A,B	Steel Beam GR (Galvanized)	Linear Foot *
606.2A,B	Steel Beam GR (Corrosion Resistant)	Linear Foot *
606.21A,B	Double-faced Steel Beam GR (Galvanized)	Linear Foot
606.24A,B	Double-Faced Steel Beam GR (Corrosion Resistant)	Linear Foot
606.411	Concrete Barrier, Single-Faced, Precast	Linear Foot
606.412	Concrete Median Barrier, Double-Faced, Precast	Linear Foot
606.41291	Modified Concrete Median Barrier, Precast	Linear Foot
606.41292	Modified Concrete Median Barrier, Cast-in-Place	Linear Foot
606.417	Portable Concrete Barrier (for Traffic Control)	Linear Foot

* Linear foot except that terminal units are by the unit.

A	Type of Post	
0	Open	
1	Light weight steel (S3x5.7)	
2	Medium weight steel(W6x8.5)	
3	Round wood 7-1/2 inches minimum at shoulder grade	
4	6 inch x 8 inch wood	
5	Round wood 6 inch +/- 1/2 inch at shoulder grade	
6	Aluminum, size per plans	
7	Heavy weight steel (W6x15.5)	
8	Open	
9	Aluminum or steel -- Contractor's choice, size per plans	

B	Post Spacing or Type of Unit (Spacing of terminal units is standardized on the plans)	
0	"Standard Section" with 6 foot - 3 inch spacing	
1	Open	
2	Open	
3	6 foot - 3 inch	
4	Variable: 25 feet to 6 feet - 3 inches or 3-1/2 feet to 1-1/2 inches	
5	Open	
6	Terminal Unit F (1) (with 6 foot - 3 inch spacing)	Unit
7	Terminal Unit G (with 6 foot - 3 inch spacing)	Unit
8	Bridge Approach Unit (with 4 foot- 2 inch spacing)	Unit

C	Rail Material
0	Steel (Galvanized)
1	Open
2	Open
3	Open
4	Corrosion Resistant Steel

5 Steel Rubbing Rail (Galvanized)
6 Steel Top Hand Rail (Galvanized)
7 Steel Top Pipe Rail (Galvanized)
8 Open

Note 1 Length of Terminal Unit F, indicated in Col. "C" when Col. "B" = 6 or 7
0 or Blank = 100 feet (Standard)
1 Modified - (length shown on plans)
2 Open

606.5A, B, C Wood Guardrail

A Type of Wood Rail
1 Single 6 inch x 8 inch
2 Double 6 inch x 8 inch
5 Double 4 inch x 6 inch

B Type of Posts
0 5 feet-8 inch x 8 inch round wood
1 6 feet-6 inch x 8 inch round wood
2 5 feet-9 inch x W6x8.5 steel
3 5 feet-9 inch x W6x15.5 steel
4 1 feet-5 inch x W6x15.5 steel
5 2 feet-5-1/4 inch x W6x15.5 steel

C Post Spacing
7 7 feet-6 inch
8 8 feet-0 inch

606.6A, B, C Handrail Linear Foot

A Type
1 Step
2 Ramp
3 Safety Rail

B Guard Required
0 No Guard
1 With Guard

C Material

1 Steel

606.82	Anchorages for Beam Guardrail	Each
606.83	Anchorages for Strong Beam Guardrail	Each
606.91	Resetting or Setting Guardrail	Linear Foot
606.92	Resetting Anchorages	Each
606.93	Temporary Beam Guardrail	Linear Foot

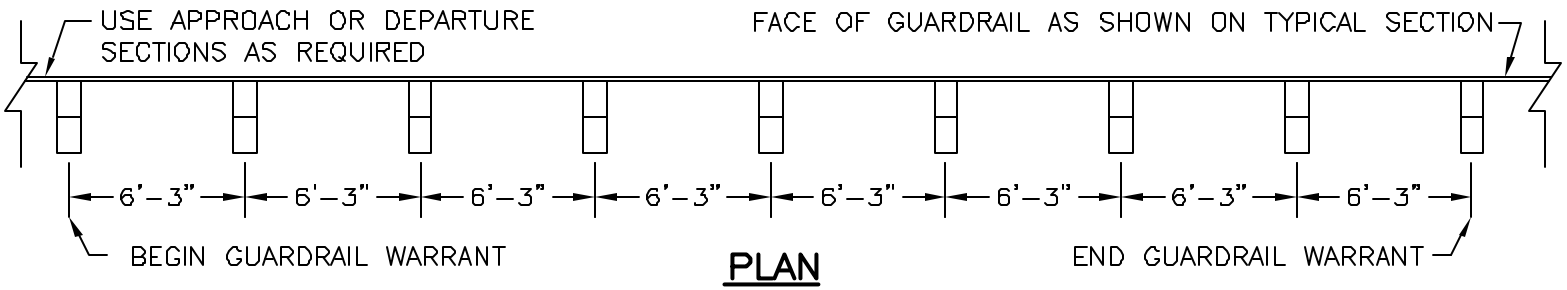

PLAN

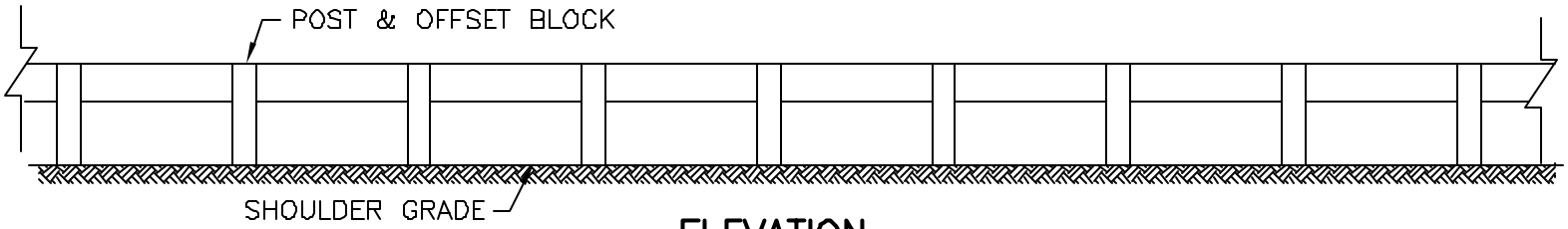

ELEVATION

ITEM No. 606.127, STEEL POST BEAM GUARD RAIL (TERMINAL UNIT TYPE 'G')

ITEM No. 606.147, WOOD POST BEAM GUARD RAIL (TERMINAL UNIT TYPE 'G')

USE ON DIVIDED HIGHWAYS ONLY WITH DIRECTION OF TRAFFIC AS INDICATED. (DO NOT USE WITHIN WARRANT LIMITS)

STANDARD SECTION

S:\DWG\DETAILS\606-1 GRSTANDARD.DWG

NOT TO SCALE

FIGURE 606-1

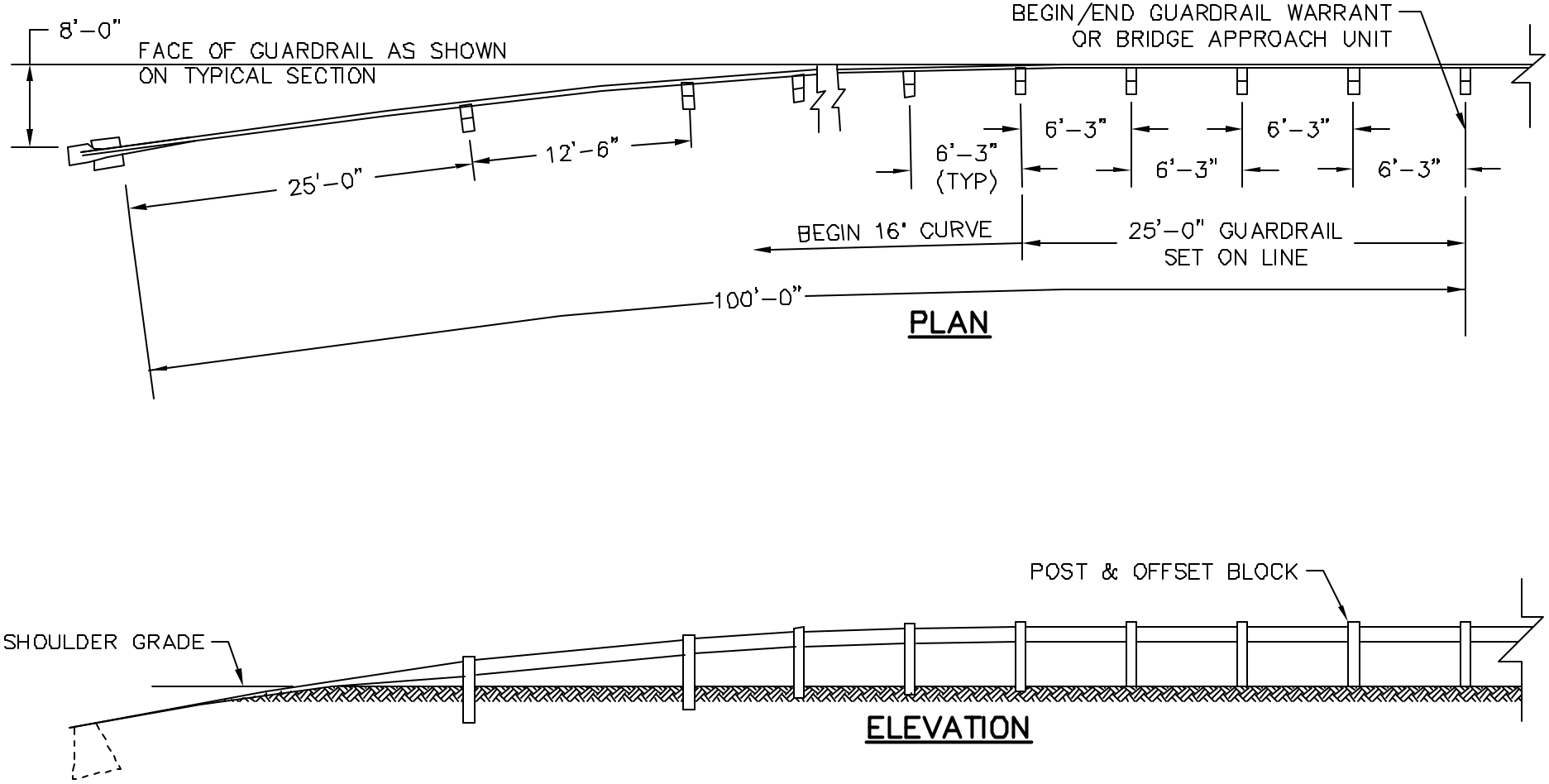

ITEM No. 606.126, STEEL POST
ITEM No. 606.146, WOOD POST

USE AT BEGINNING OR END OF SECTION FOR WARRANTED GUARDRAIL WHEN TERMINATING IN A FILL SECTION OR AN EXCAVATION SECTION WITH A 4:1 BACKSLOPE.

DO NOT USE WITHIN WARRANTED LIMTS.

TERMINAL UNIT TYPE 'F'

S:\DWG\DETAILS\606-2 GRTERMF.DWG

NOT TO SCALE
FIGURE 606-2

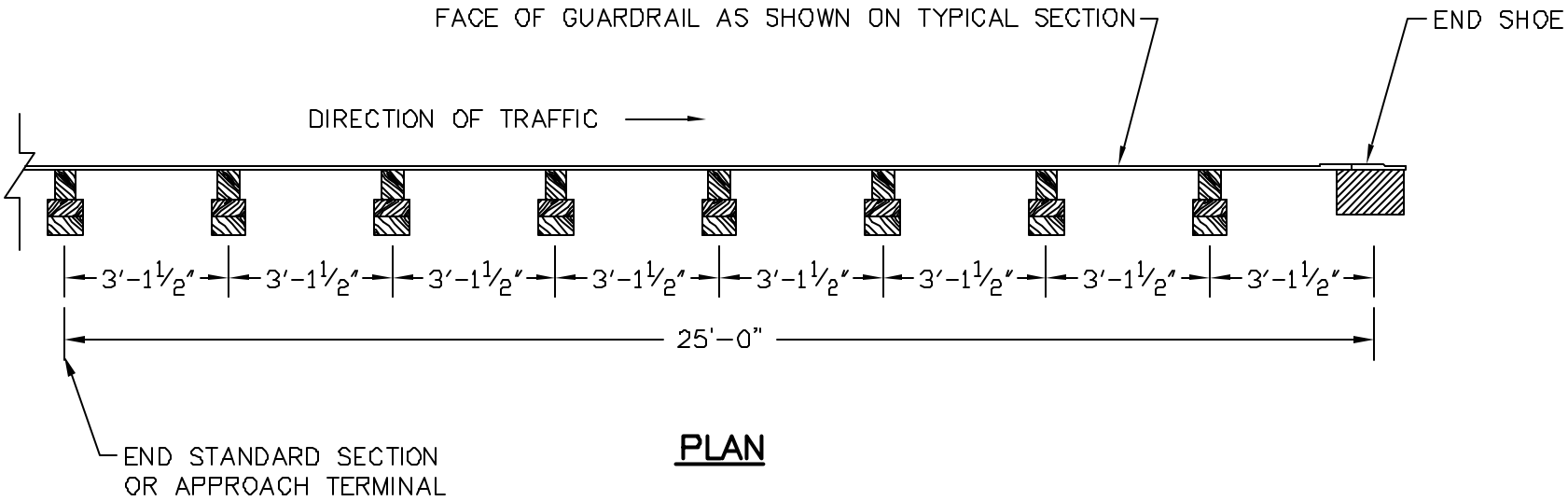

PLAN

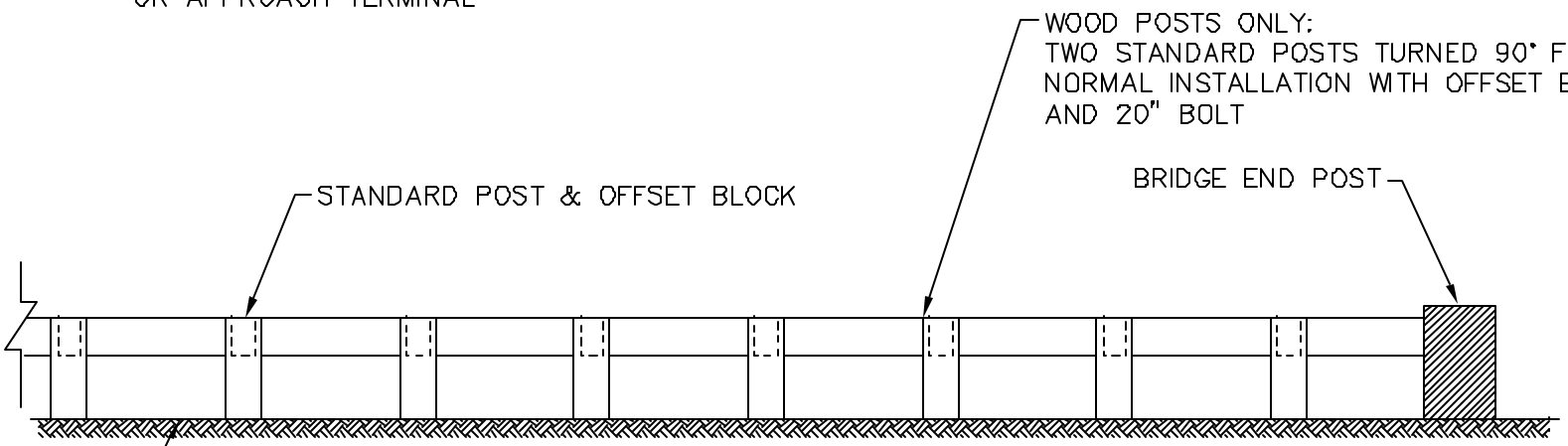

ELEVATION

NOTE:

USE THIS SECTION ON DEPARTURE TRAFFIC ENDS.
ON APPROACHING TRAFFIC ENDS ADD A SPACER UNDER SHOE AS DETAILED ON PLAN.

ITEM No. 606.127, STEEL POST BEAM GUARD RAIL (BRIDGE APPROACH UNIT)

ITEM No. 606.147, WOOD POST BEAM GUARD RAIL (BRIDGE APPROACH UNIT)

USE AT BRIDGE END POST OR AS DESIGNATED.

BRIDGE APPROACH UNIT

S:\DWG\DETAILS\606-3 GRBRIDGE.DWG

NOT TO SCALE
FIGURE 606-3

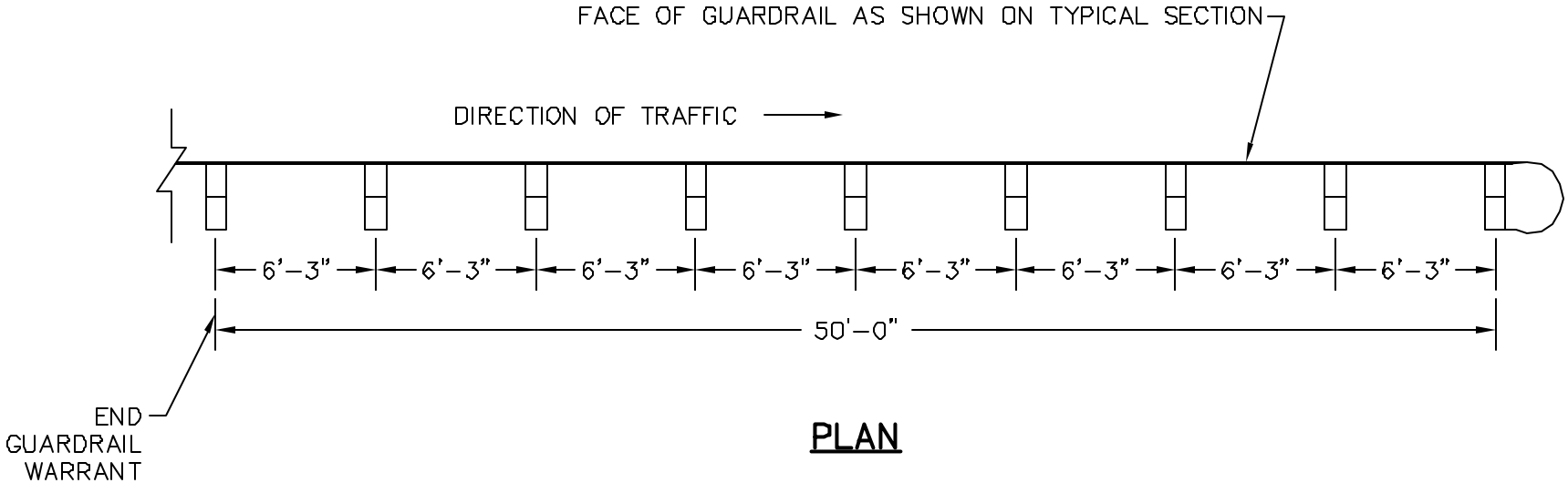

PLAN

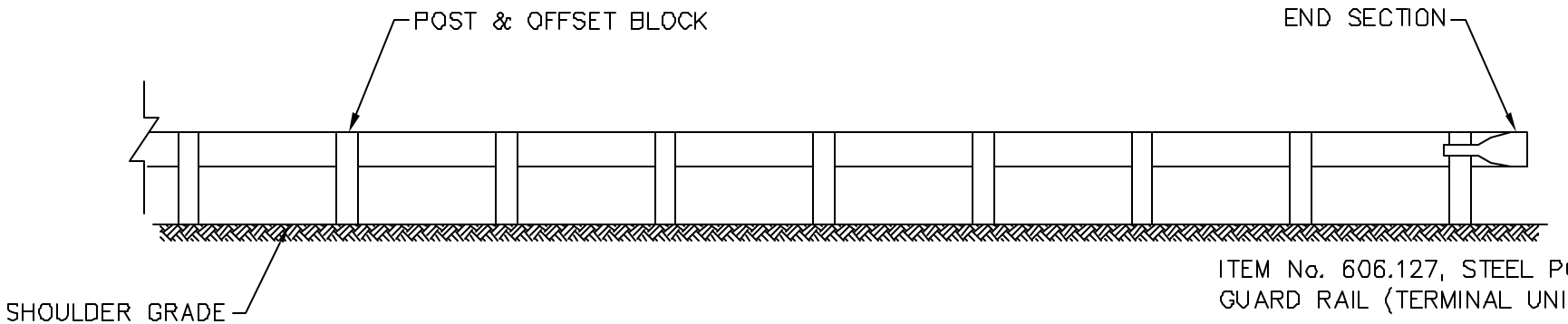

ELEVATION

ITEM No. 606.127, STEEL POST BEAM GUARD RAIL (TERMINAL UNIT TYPE 'G')

ITEM No. 606.147, WOOD POST BEAM GUARD RAIL (TERMINAL UNIT TYPE 'G')

USE ON DIVIDED HIGHWAYS ONLY WITH DIRECTION OF TRAFFIC AS INDICATED. (DO NOT USE WITHIN WARRANT LIMITS)

TERMINAL UNIT TYPE 'G'

S:\DWG\DETAILS\606-4 GRTERMG.DWG

NOT TO SCALE
FIGURE 606-4

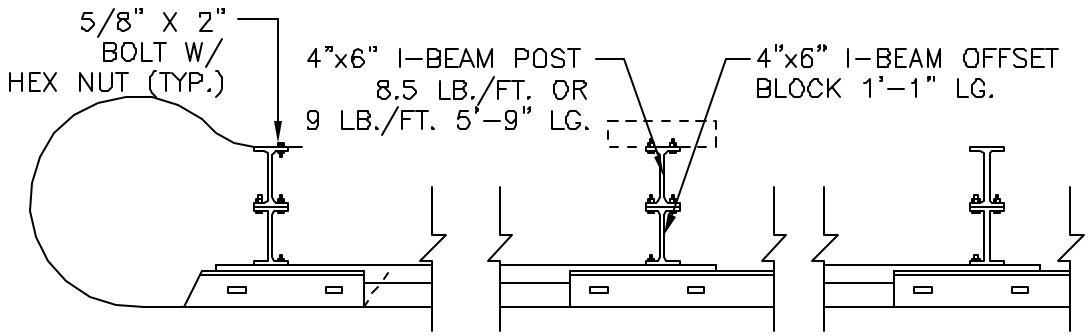

PLAN FOR STEEL POST AND OFFSET BLOCK

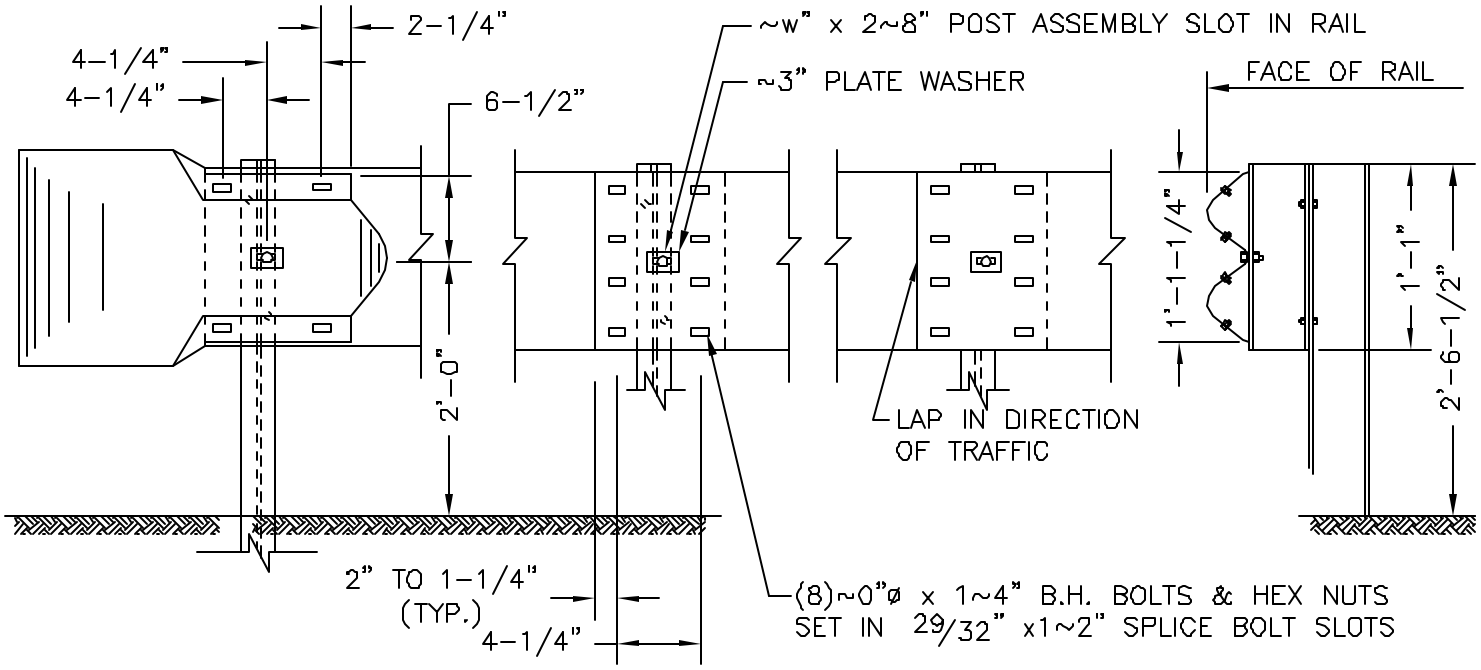

GENERAL NOTES

1.) STEEL POSTS, OFFSET BLOCKS, ANCHORS, PLATES & ALL FITTINGS TO BE GALVANIZED.

2.) ALL DIMENSIONS SUBJECT TO MANUFACTURER'S TOLERANCES.

3.) RAIL PANELS AND END SECTIONS TO BE 12 GAUGE STEEL.

4.) BACK-UP PLATE TO BE PLACED BEHIND RAIL ELEMENTS AT INTERMEDIATE STEEL POSTS. (NON-SPLICE POSTS)

5.) ALL PARTS SHALL CONFORM TO CURRENT STANDARD SPECIFICATIONS.

6.) WHEN GUARDRAIL IS CONSTRUCTED AT UP TO FOUR FEET FROM THE EDGE OF PAVEMENT, THE GUARDRAIL HEIGHT WILL BE SET FROM THE GRADE AT THE EDGE OF PAVEMENT. WHEN GUARDRAIL IS CONSTRUCTED MORE THAN FOUR FEET FROM THE EDGE OF PAVEMENT, THE GUARDRAIL WILL BE SET FROM THE GRADE AT THE FACE OF RAIL.

GUARDRAIL DETAILS

S:\DWG\DETAILS\606-5a GRDET.DWG

NOT TO SCALE

FIG. 606-5a

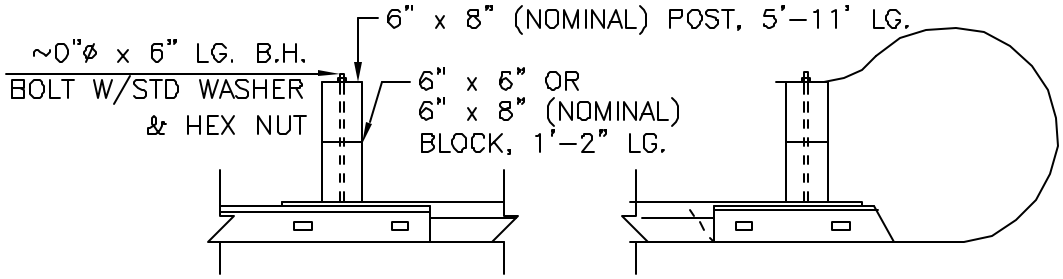

PLAN FOR WOOD POST AND OFFSET BLOCK

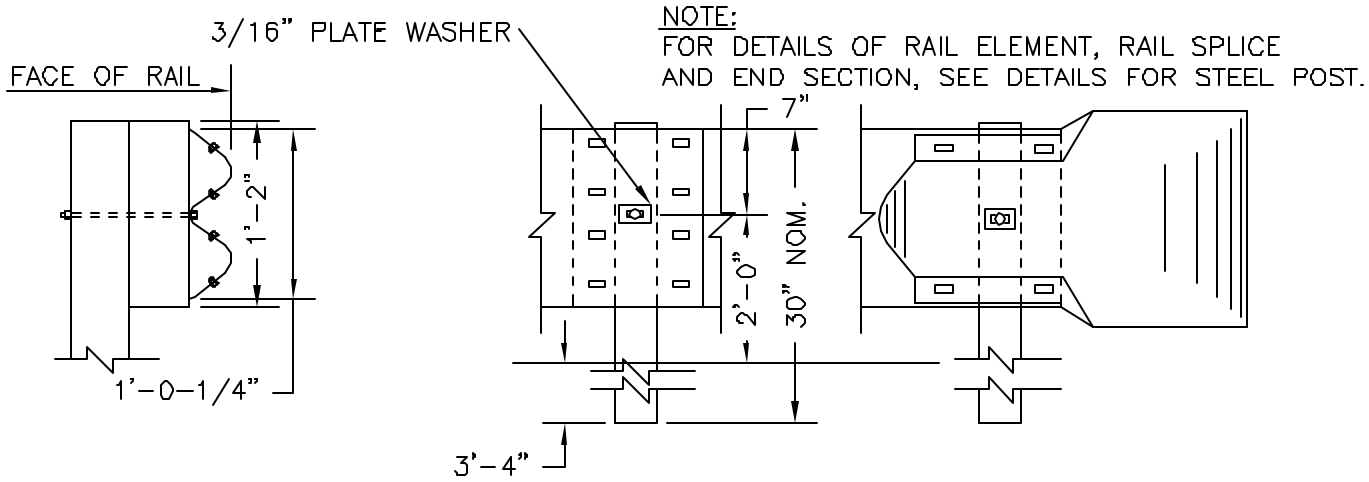

NOTE:
FOR DETAILS OF RAIL ELEMENT, RAIL SPLICE AND END SECTION, SEE DETAILS FOR STEEL POST.

GENERAL NOTES

1.) STEEL POSTS, OFFSET BLOCKS, ANCHORS, PLATES & ALL FITTINGS TO BE GALVANIZED.

2.) ALL DIMENSIONS SUBJECT TO MANUFACTURER'S TOLERANCES.

3.) RAIL PANELS AND END SECTIONS TO BE 12 GAUGE STEEL.

4.) BACK-UP PLATE TO BE PLACED BEHIND RAIL ELEMENTS AT INTERMEDIATE STEEL POSTS. (NON-SPLICE POSTS)

5.) ALL PARTS SHALL CONFORM TO CURRENT STANDARD SPECIFICATIONS.

6.) WHEN GUARDRAIL IS CONSTRUCTED AT UP TO FOUR FEET FROM THE EDGE OF PAVEMENT, THE GUARDRAIL HEIGHT WILL BE SET FROM THE GRADE AT THE EDGE OF PAVEMENT. WHEN GUARDRAIL IS CONSTRUCTED MORE THAN FOUR FEET FROM THE EDGE OF PAVEMENT, THE GUARDRAIL WILL BE SET FROM THE GRADE AT THE FACE OF RAIL.

GUARDRAIL DETAILS

S:\DWG\DETAILS\606-5b GRDET.DWG

NOT TO SCALE

FIG. 606-5b

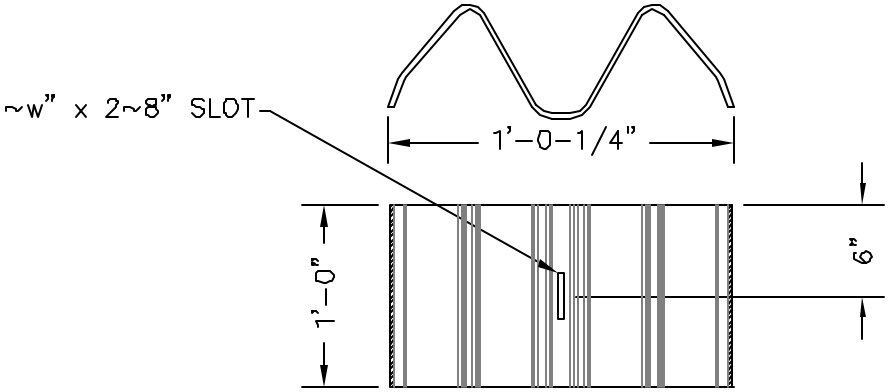

W-BEAM BACK-UP PLATE (STEEL POST ONLY)

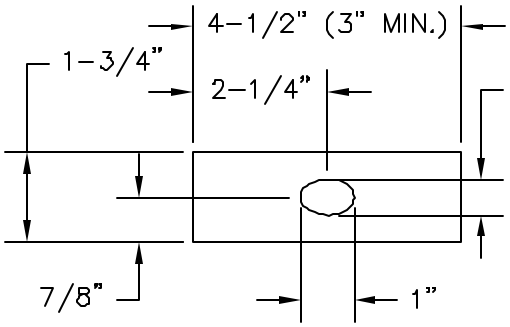

~3" PLATE WASHER

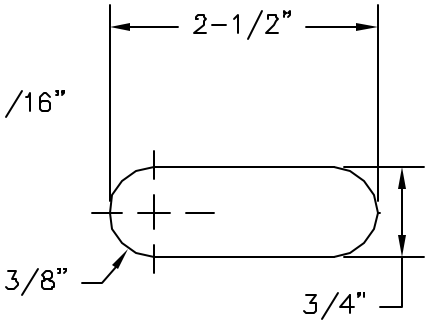

POST ASSEMBLY SLOT

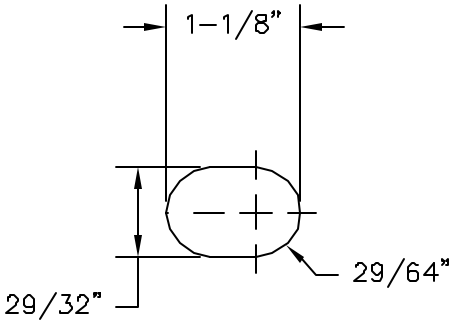

SPLICE BOLT SLOT

GUARDRAIL BOLT SLOT AND PLATE WASHER

S:\DWG\DETAILS\606-6 GRHARD.DWG

NOT TO SCALE

FIG. 606-6

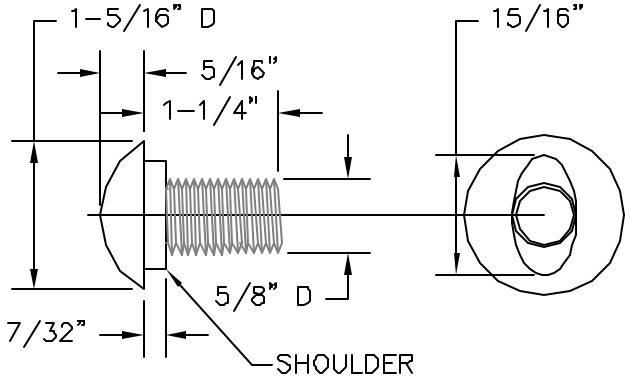

ALTERNATE No. 1

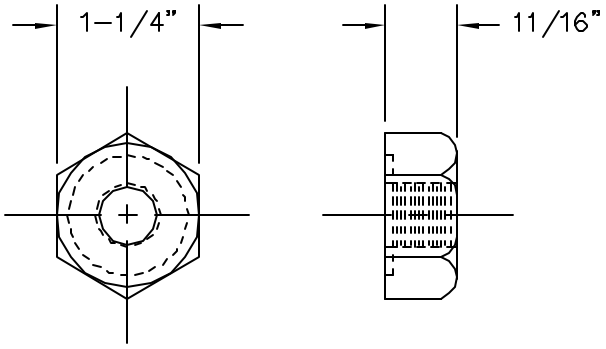

NUT (9 REQ'D PER RAIL)

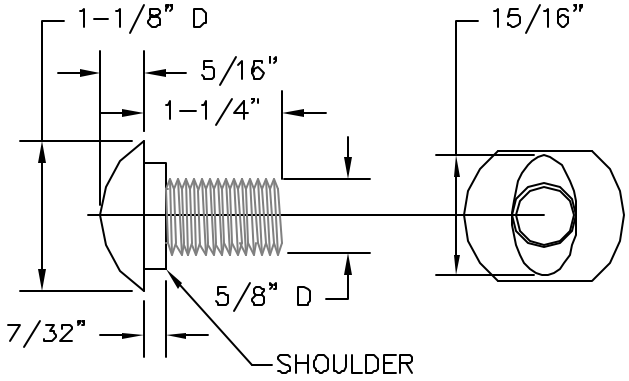

ALTERNATE No. 2

POST BOLT SAME EXCEPT LENGTH.
1 REQUIRED PER POST
STD. LENGTHS: 2", 5", 8", 10~8", & 16"

GUARDRAIL HARDWARE DETAILS

S:\DWG\DETAILS\606-7 GRHARD.DWG

NOT TO SCALE

FIG. 606-7

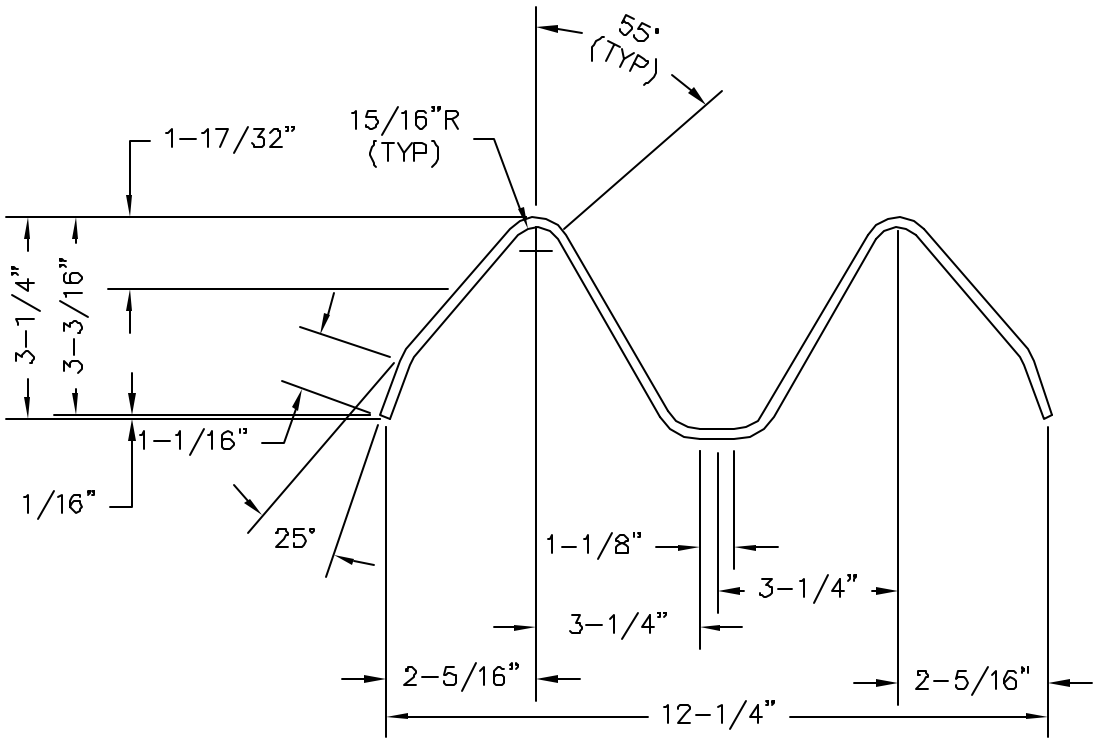

SECTION THROUGH RAIL ELEMENT

S:\DWG\DETAILS\606-8 GRrail.DWG

NOT TO SCALE

FIG 606-8

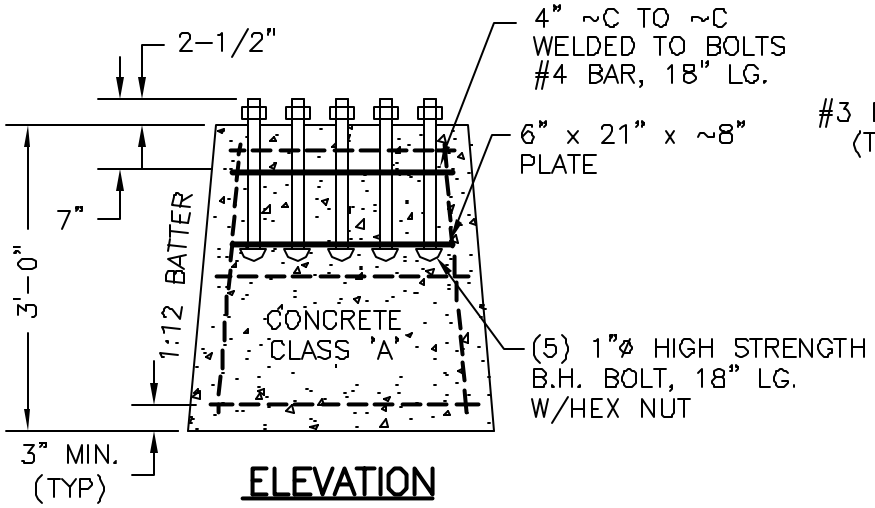

ELEVATION

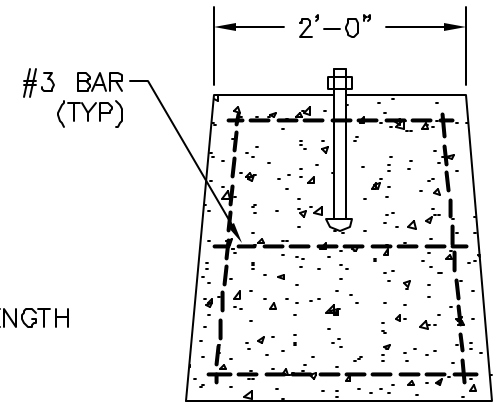

ELEVATION

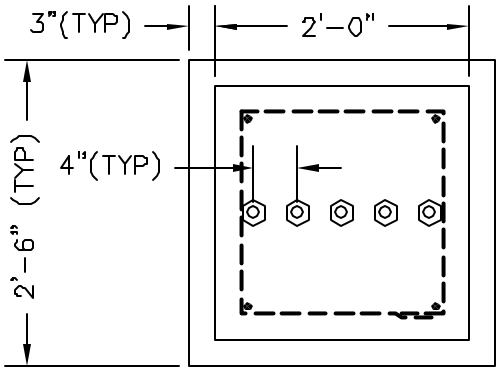

PLAN

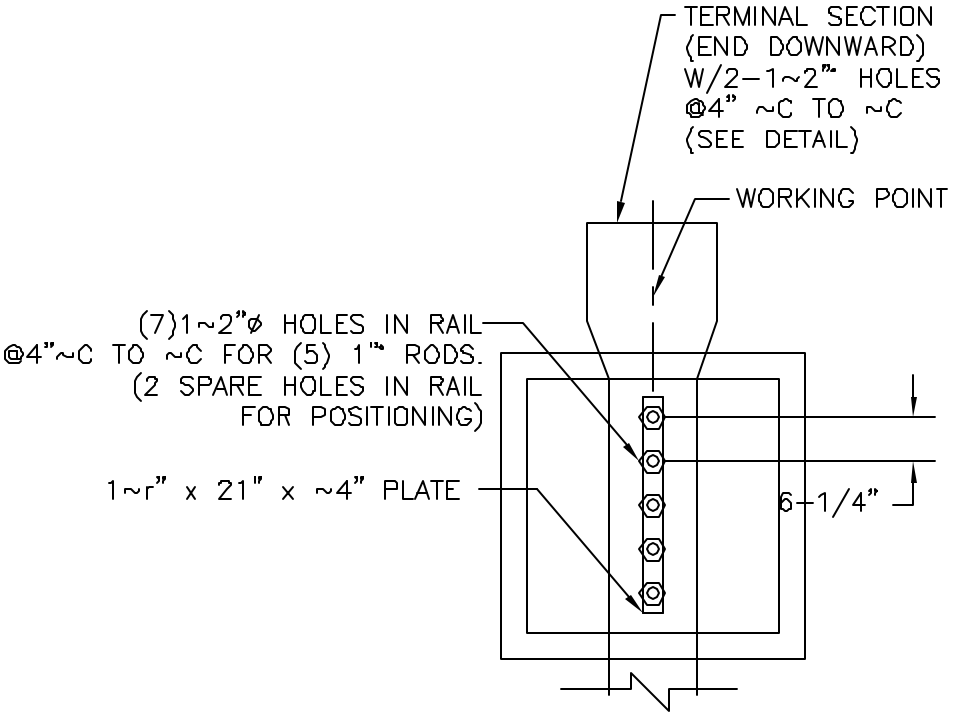

PLAN

ANCHOR DETAIL FOR TERMINAL UNIT TYPE 'F'

S:\DWG\DETAILS\606-9 GRanchF.DWG

NOT TO SCALE

FIG 606-9

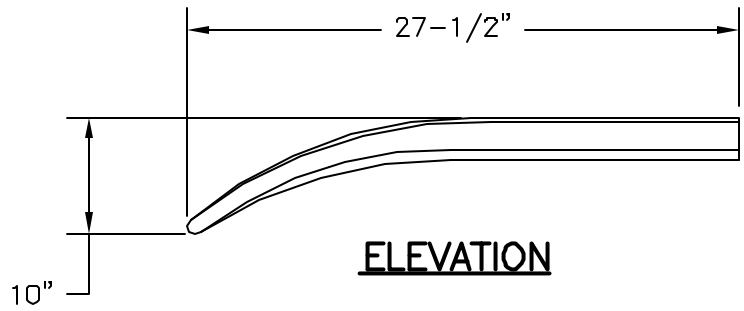

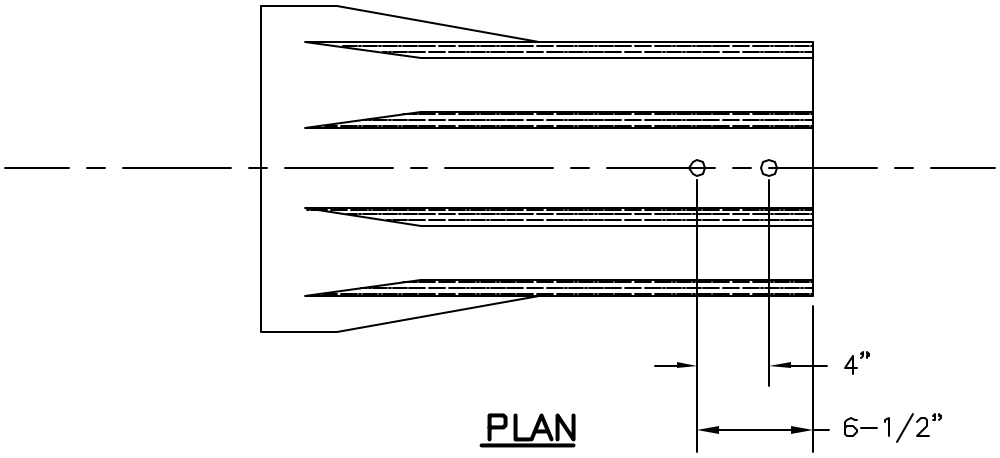

END SECTION (FOR USE W/ANCHOR BLOCK ONLY)

S:\DWG\DETAILS\606-10 Gr-endsectF.DWG

NOT TO SCALE

FIG. 606-10

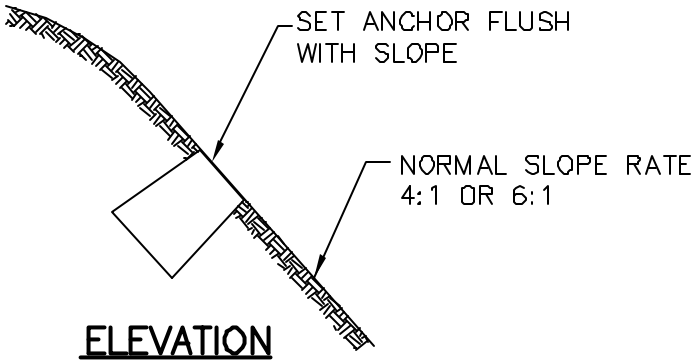

ELEVATION

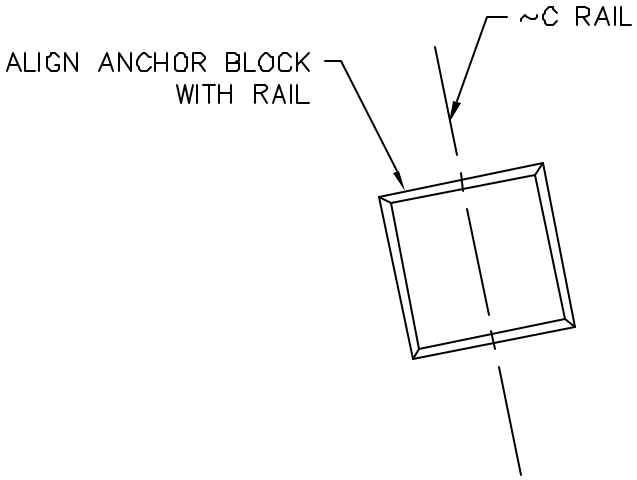

PLAN

ANCHOR SETTING UNIT 'F'

S:\DWG\DETAILS\606-11 GR-ANCHR.DWG

NOT TO SCALE

FIG 606-11

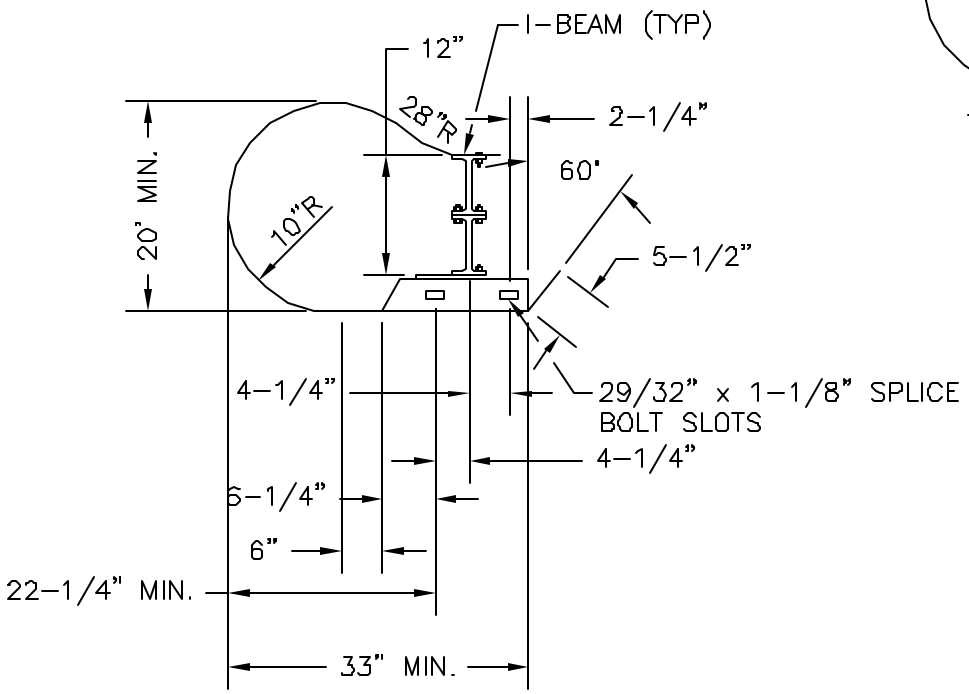

PLAN

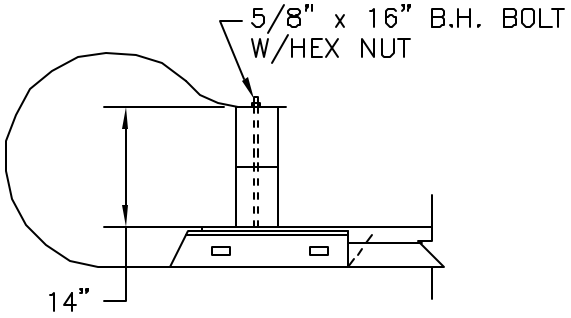

PLAN

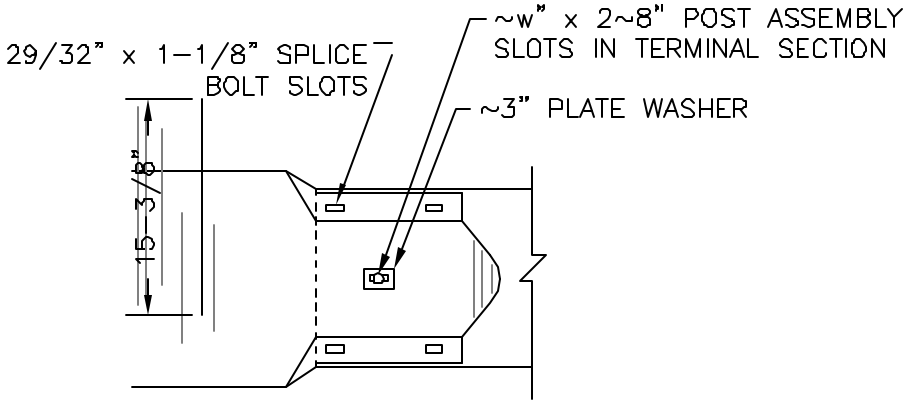

ELEVATION

GUARDRAIL END SECTION DETAILS

S:\DWG\DETAILS\GUARDRAIL\606-12 GRPOST.DWG

NOT TO SCALE

FIG 606-12

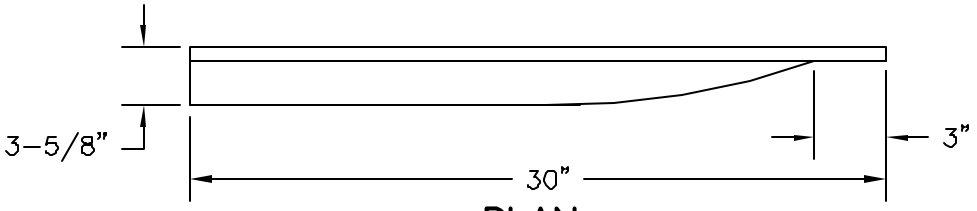

PLAN

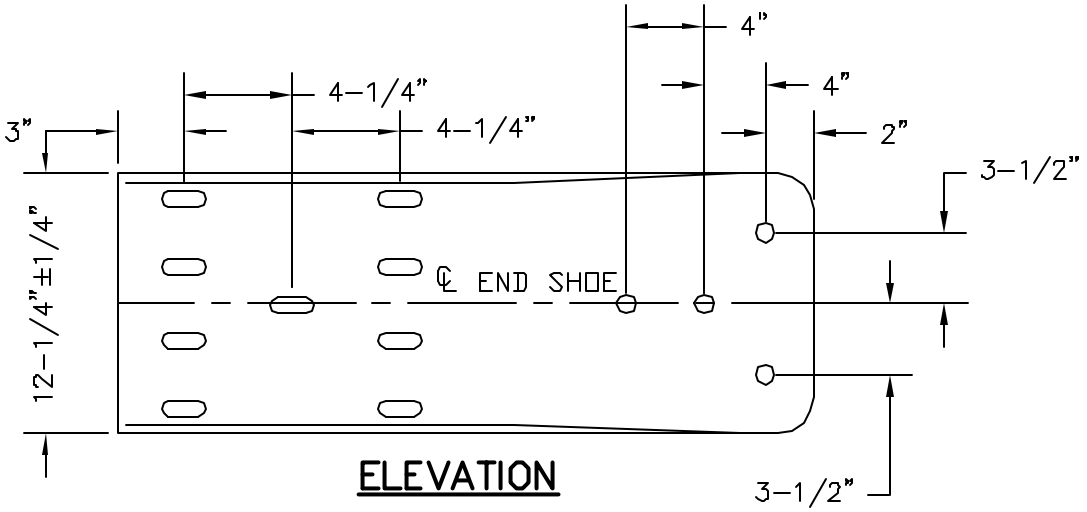

ELEVATION

END SHOE FOR CONNECTION TO BRIDGE END POST

S:\DWG\DETAILS\606-12 GrBrShoe.DWG

NOT TO SCALE

FIG 606-13

SECTION 607 -- FENCES

Description

1.1 This work shall consist of the constructing, removing and resetting railings, fences, and gates as shown on the plans or as ordered. This work shall include furnishing and installing the required electrical grounds.

Materials

2.1 Woven Wire Fence.

2.1.1 Wire shall conform to ASTM A 116, Design No. 1047- 12-11. Minimum coating shall meet Class 1.

2.1.2 Steel posts and angle braces shall conform to ASTM A 499 and A 702. Posts shall be galvanized and shall be in accordance with AASHTO M 111. Fittings, hardware and other appurtenances not specifically covered by the plans and specifications shall be standard commercial grade, manufactured in accordance with current standard practice.

2.1.3 Tie wires and wire clips shall be of equivalent size and coating as specified in 2.1.1.

2.1.4 Gates. Gate posts shall conform to 2.1.2. Wire shall conform to 2.1.1. The frame, center brace, diagonal tension rod, and hardware shall conform to the standards shown on the plans.

2.2 Chain Link Fence.

2.2.1 Chain link fence shall conform to AASHTO M 181.

2.2.2 Unless otherwise stipulated, fencing material shall be 9 gauge 2 inch mesh, Type II or Type IV fabric. The specific diameter for Type IV fabric is the metallic coated diameter and the PVC coating shall not be used when determining wire size. All vinyl-coated fabric used on the project shall be the same shade of green.

2.2.2.1 Fabric up to and including 60 inches high shall be knuckled at the top and bottom salvages. Fabric over 60 inches high shall be twisted and barbed on the bottom salvage and knuckled on the top salvage.

2.2.3 Metallic coated steel posts, rails, or gate frames shall conform to AASHTO M 181 Grade 1 or Grade 2. Miscellaneous fittings and hardware shall conform to AASHTO M 181 Section 29.

2.2.4 Tension bars shall not be less than 0.25 by 0.75 inches.

2.2.5 Wire ties and clips for fastening fabric to posts and top rail shall be of the same material and the same or larger gauge as the fabric.

2.3 Barbed wire. Barbed wire, unless otherwise specified, shall be fabricated from 2 ply 12-1/2 gauge, class 3 zinc- coated steel wire, with 14 gauge 4-point barbs spaced not more than 5 inches apart, and shall meet the requirements of ASTM A 121.

2.4 Additional materials required for resetting railings or fencing or both shall conform in quality and type to the materials in the existing fence.

2.5 Concrete shall conform to 520.

2.6 Protective coating for contact surfaces of aluminum and concrete shall be either zinc-chromate primer, 708-NH 1.50, or an approved bituminous paint meeting FSS TT-C-494.

Construction Requirements

3.1 General.

3.1.1 The Contractor shall perform such clearing and grubbing as may be necessary to construct the fence to the required grade and alignment.

3.1.2 At locations where breaks in a run of fencing are required, or at intersections with existing fences, appropriate adjustment in post spacing shall be made.

3.1.3 The fence shall be permanently connected to the existing fence.

3.1.4 Posts, braces, or anchors shall be embedded in concrete and temporary guys or braces may be required to hold the posts in proper position until such time as the concrete has set sufficiently to hold the posts. Unless otherwise permitted, no materials shall be installed on posts or strain placed on guys and bracing set in concrete until 3 days have elapsed from the time of placing of the concrete.

3.1.4.1 The portions of aluminum posts which will be in contact with concrete shall be coated both inside and outside with protective coating to 1 inch above the top of the concrete. The paint shall be allowed to dry for at least 24 hours before the concrete is placed.

3.1.4.2 In wet areas when it is impractical to place concrete, steel drive anchor assemblies may be required.

3.1.5 All posts shall be set plumb and firm and to the required grade, spacing, and alignment. Cutting of the posts will be allowed only with the approval of the Engineer.

3.1.6 When it is necessary to drill into rock to set a steel post, the post may be shortened, provided a minimum length of 12 inches of post is grouted in the rock.

3.1.7 At each location where an electric transmission, distribution, or secondarily line crosses any of the types of metal fences covered by these specifications, the fence shall be grounded as required by the electric utility company.

3.1.7.1 At locations where electric lines run parallel and in close proximity to metal fences, grounding systems may be required by the electric utility company.

3.1.8 Where it is impractical to conform the fence to the general contour of the ground, as at ditches, the opening beneath the fence shall be closed as ordered.

3.1.9 All surplus material and other debris shall be removed.

3.2 Woven Wire Fence.

3.2.1 The wire shall be stretched so that not more than 1/2 of the hump is removed from the horizontal wire. The top and bottom wire and alternate parallel interior wires shall be fastened at every post in such a manner that each interior wire shall have a fastening at every other post.

3.2.1.1 Runs of woven wire fence 600 feet or less in length shall be erected with not more than one splice between post assemblies. Except as otherwise provided, splicing the wire will be permitted at posts only. Each horizontal strand of wire shall be wrapped completely around posts at post assemblies and shall be securely fastened by winding the end of the wire about the same strand where it leads up to the post. Other devices designed specifically to splice fencing wire may be used when approved. Post assemblies shall be constructed at all corners, ends, gates, at extreme sags or humps in grade, and at ends of 600 foot lengths of fencing.

3.3 Chain Link Fence.

3.3.1 The fence shall be erected so that the bottom is between 1 and 2 inches above the ground.

3.3.1.1 The top rail shall pass through the post tops to form a continuous brace from end to end of each section of
fence, and shall be securely fastened to the posts at post assemblies by suitable clamps.

3.3.1.2 Post assemblies as shown on the plans shall be installed at ends, at corners or changes in line where the angle of deflection is 30 degrees or more, at abrupt changes in vertical grades

where pull posts are required, and at gates. Moreover, at least one post assembly shall be installed for every 500 feet of run.

3.3.1.3 Braces shall be spaced approximately midway between the top and the ground, and extend to the first line post. Braces shall be securely fastened to posts by suitable clamps.

3.3.1.4 Truss rods shall be installed as shown on the plans.

3.3.2 Unless otherwise shown on the plans, when barbed wire is required, arms shall be installed outward.

3.3.3 Fabric shall be fastened to the post with suitable fabric bands, stretcher bar bands, and hook bolts and to the top rail with tie wires as shown on the plans. The fabric shall be free from sags and bends.

3.3.4 All holes within 2 feet of the fence shall be filled with suitable approved material and compacted properly.

3.4 Temporary fence. Fences holding livestock shall be promptly replaced by temporary fencing, with no extra compensation, during the time between the removal of the old fence and the erection of the new fence. Fencing meeting the specifications for the project may be used in its permanent location after having been used as temporary fence, provided the fencing has not been damaged.

3.5 Gates. Gates shall be firmly and securely erected in accordance with the recommendations of the manufacturer and as directed.

3.6 Resetting. The existing railing or fencing shall be carefully removed, transported and reset at the required location. The reset railing or fencing shall be at least equivalent in strength and appearance to the original railing or fencing. Additional materials such as fittings or hardware shall be furnished and installed as necessary.

3.7 Barbed wire. The installation of barbed wire along the right-of-way is not allowed (see RSA 236:15).

Method of Measurement

4.1 All fence, new or reset, will be measured by the linear foot, to the nearest 0.1 of a foot. Measurement will be along the top of the fence for each continuous run.

4.1.1 Woven wire fence and chain link fence will be measured from center to center of end posts or gate posts as the case may be.

4.1.2 Railing reset will be measured from end to end of rail.

4.2 Post assemblies of the kind specified will be measured by the number of units. A unit shall consist of the post and all its required hardware and anchorages.

4.3 Gates will be measured as complete units of the size and type specified.

Basis of Payment

5.1 The accepted quantities of fencing of the type specified and of the height required will be paid for at the contract unit price per linear foot, complete in place. This unit price shall include the cost of furnishing all labor, tools and equipment to satisfactorily complete the work and shall include excavation, concrete or steel drive anchor assemblies, posts, hardware, fencing and any repair of material damaged by the Contractor's operation. Gates and post assemblies, complete in place, shall be paid for as units. Clearing necessary to provide space for erecting the fencing will be paid for as provided under Item 201.6.

5.2 The accepted quantity of railing or fencing reset will be paid for at the contract unit price per linear foot complete in place, except that the cost of furnishing additional materials, including new post concrete embediment, required through no fault of the Contractor will be paid for as Extra Work. Removing old concrete embediment from the posts will be subsidiary to the resetting item.

Pay Items and Units:

607.1	Woven Wire Fence	L.F.
607.20___	___Ft. Woven Wire Gates	Each
607.41	Post Assemblies for Woven Wire Fence	Each
607.6_2	Chain Link Fence with Aluminum Coated Steel Fabric, Ft. High	L.F.
607.6_5	Chain Link Fence with Vinyl-Coated Steel Fabric, _Ft. High	L.F.
607.6_9	Post Assemblies for Chain Link Fence, _Ft. High	Each
607.7___	___Ft. Chain Link Gates, _Ft. High	Each
607.8___	___Ft. Opening Chain Link Double Gates, _Ft. High	Each
607.9	Resetting Railing and Fencing	L.F.

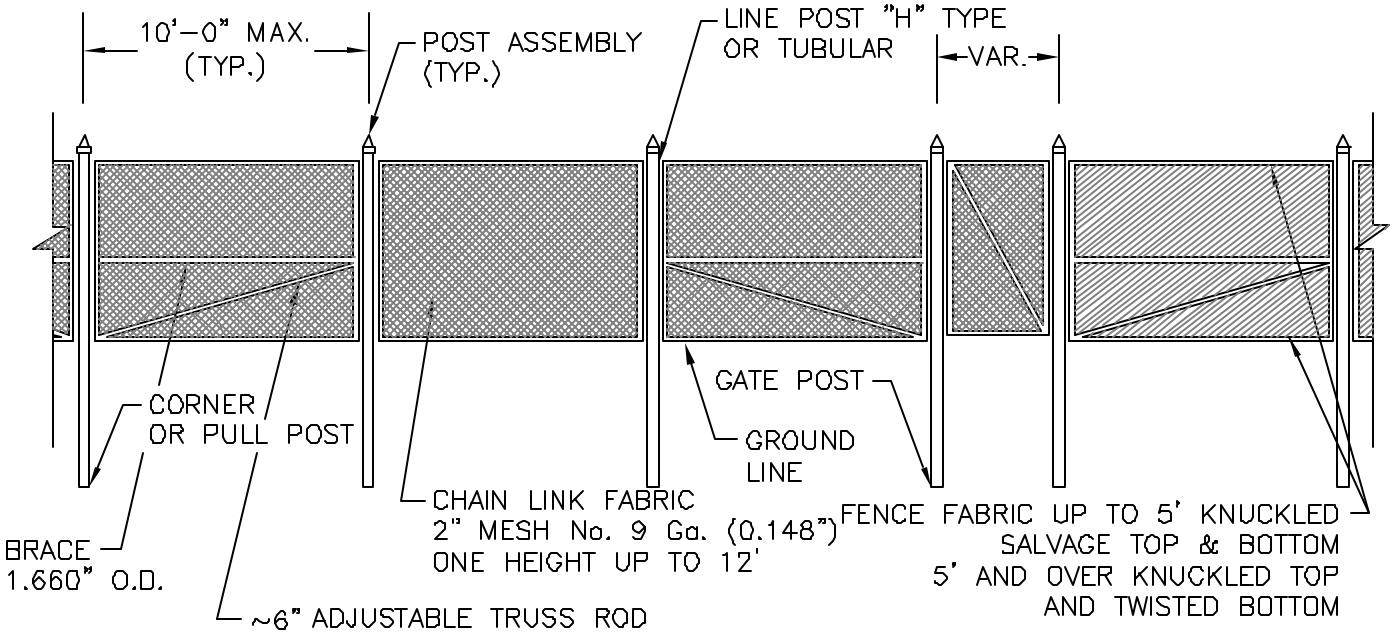

NOTE:

ALL END POSTS SHALL HAVE ONE BRACE; ALL CORNER AND INTERMEDIATE BRACE OR PULL POSTS SHALL HAVE TWO BRACES, WITH A MAXIMUM SPACING BETWEEN POST ASSEMBLIES OF 500 FEET.

FOR ALL POSTS SEE FOOTING DETAIL.

FOR FENCE ERECTION ON THE RIGHT-OF-WAY LINE, SEE WOVEN WIRE FENCE DETAIL.

DESIGN IS FOR STEEL OR ALUMINUM FENCING.

CHAIN LINK FENCE

S:\DWG\DETAILS\607-1 CHAIN1.DWG

NOT TO SCALE

FIG. 607-1

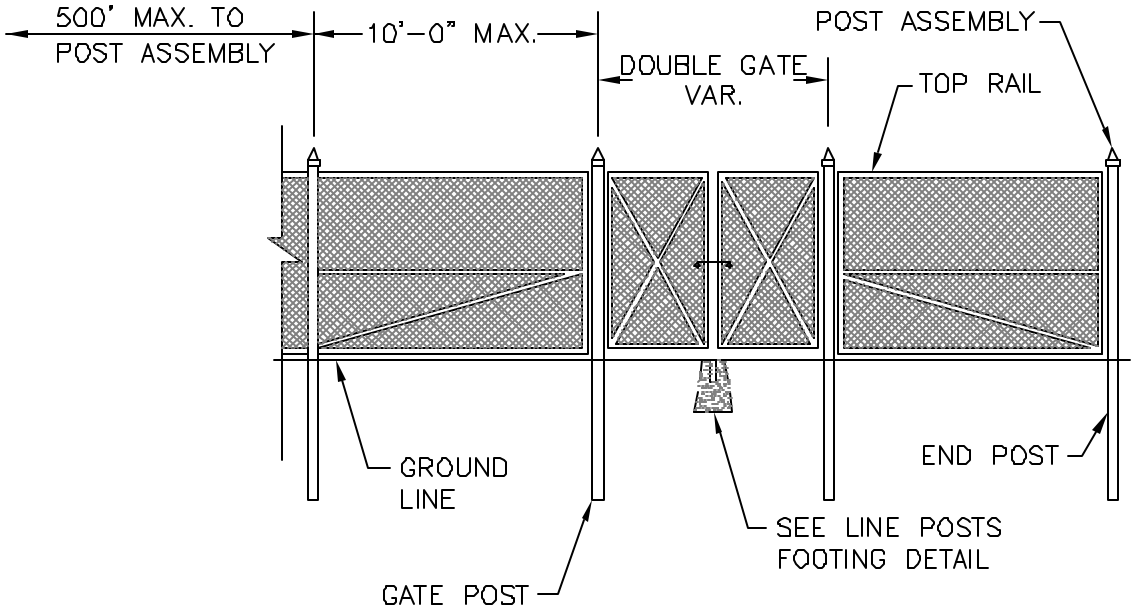

TOP RAILS		
FENCE HEIGHT	TUBULAR HEIGHT	LBS/FT
STEEL		
ALL	1.660" O.D.	2.27
ALUMINUM		
UP TO 12'	1.660" O.D.	0.786

CHAIN LINK FENCE-POST ASSEMBLIES

S:\DWG\DETAILS\607-2 CHAIN2.DWG

NOT TO SCALE

FIG. 607-2

NOTE:

WHERE GROUND CONDITIONS PERMIT, FORMS FOR FOOTING WILL NOT BE REQUIRED.

ALUMINUM POSTS IN CONCRETE SHALL HAVE A PROTECTIVE COATING.
SEE AMENDMENT TO SECTION 607 OF THE STANDARD SPECIFICATIONS.

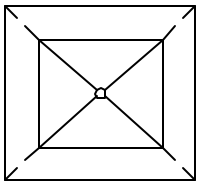

TOP VIEW

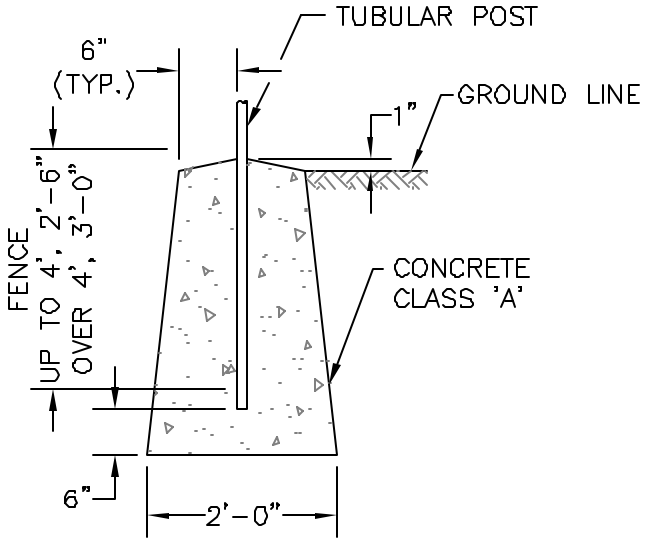

END, CORNER, GATE OR PULL POST

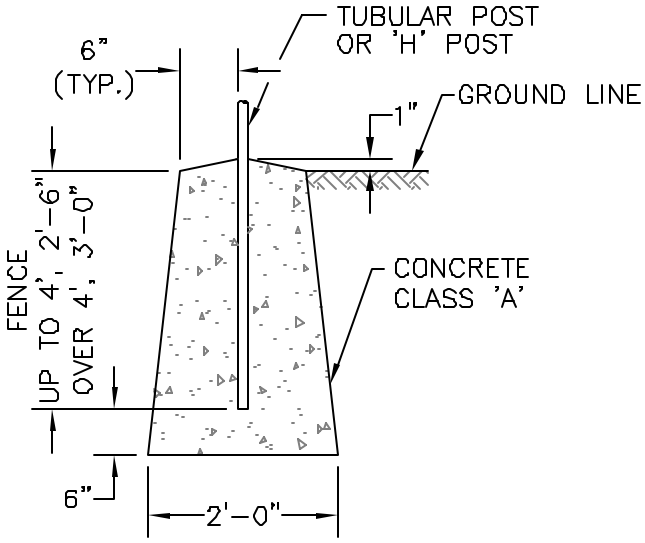

LINE POST

FOOTING DETAIL (WITH FORM)

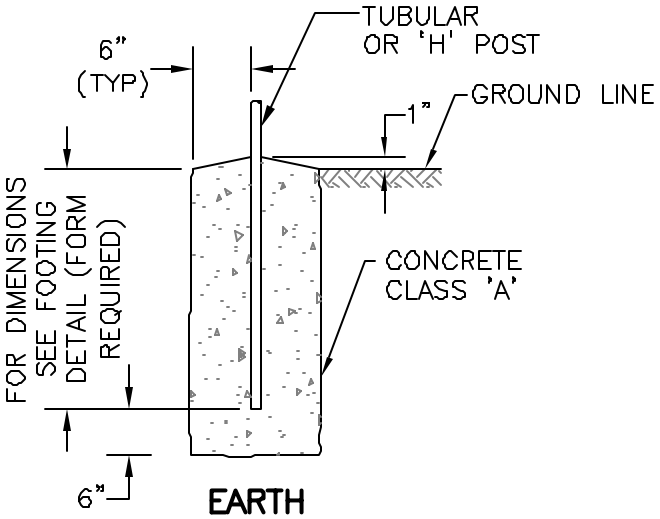

EARTH

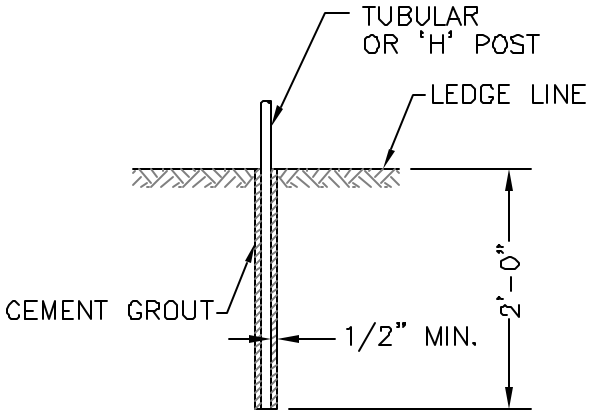

LEDGE

FOOTING DETAIL (WITHOUT FORM)

FOOTING DETAIL FOR CHAIN LINK FENCE

S:\DWG\DETAILS\607-3 CHAINFTG.DWG

NOT TO SCALE

FIG. 607-3

END, CORNER, AND PULL POST				
FENCE HEIGHT	TUBULAR			
	ROUND	lb/sf	SQUARE	lb/sf
STEEL				
< 6'	2~6"O.D.	3.65	2" x 2"	3.60
≥ 6'	2~r"O.D.	5.79	2~8"x2~8"	5.70
ALUMINUM				
< 12'	2~r"O.D.	2.00	3" x 3"	1.76

STEEL SWING GATE AND POST TABLE						
TYPE	GATE OPENING		GATE POST (TUBULAR)			
	SINGLE	DOUBLE	ROUND	lb/ft	SQUARE	lb/ft
A	<6'	<12'	2~r"O.D.	5.79	2~8"x2~8"	5.70
B	>6'≤13'	≥12'<26'	4" O.D.	9.11	3" x 3"	7.55
C	>13'≤18	≥26'<36'	6~0"O.D.	18.97	–	–
D	>18'	>36'	8~0"O.D.	28.55	–	–
GATE FRAME		<6'	1.66" O.D.	2.27	1~8"x1~8"	1.90
		≥6'	1.90"O.D.	2.72	2" x 2"	2.72

LINE POSTS				
FENCE HEIGHT	TUBULAR		"H" TYPE	
	ROUND	lb/sf	H	lb/sf
STEEL				
< 6'	1.90"O.D.	2.72	1~r"x1~0"	2.70
≥ 6'	2~6"O.D.	3.65	2~4"x1.95"	4.10
ALUMINUM				
< 12'	2~6"O.D.	1.264	2~4"x1.95"	1.23

ALUMINUM SWING GATE AND POST TABLE						
TYPE	GATE OPENING		GATE POST (TUBULAR)			
	SINGLE	DOUBLE	ROUND	lb/ft	SQUARE	lb/ft
A	<6'	<12'	2~r"O.D.	2.004	3" x 3"	1.76
B	≥6'<12'	≥12'<24'	4" O.D.	3.151	–	–
C	≥12'<18	≥24'<36'	6~0"O.D.	6.564	–	–
D	≥18'<32	≥36'<44'	8~0"O.D.	9.878	–	–
GATE FRAME (ALL)		<6'	1.90" O.D.	0.940	2" x 2"	1.12

CHAIN LINK FENCE – POST AND BRAKE DIMENSIONS

S:\DWG\DETAILS\607-4 CHAIN4.DWG

NOT TO SCALE

FIG. 607-4

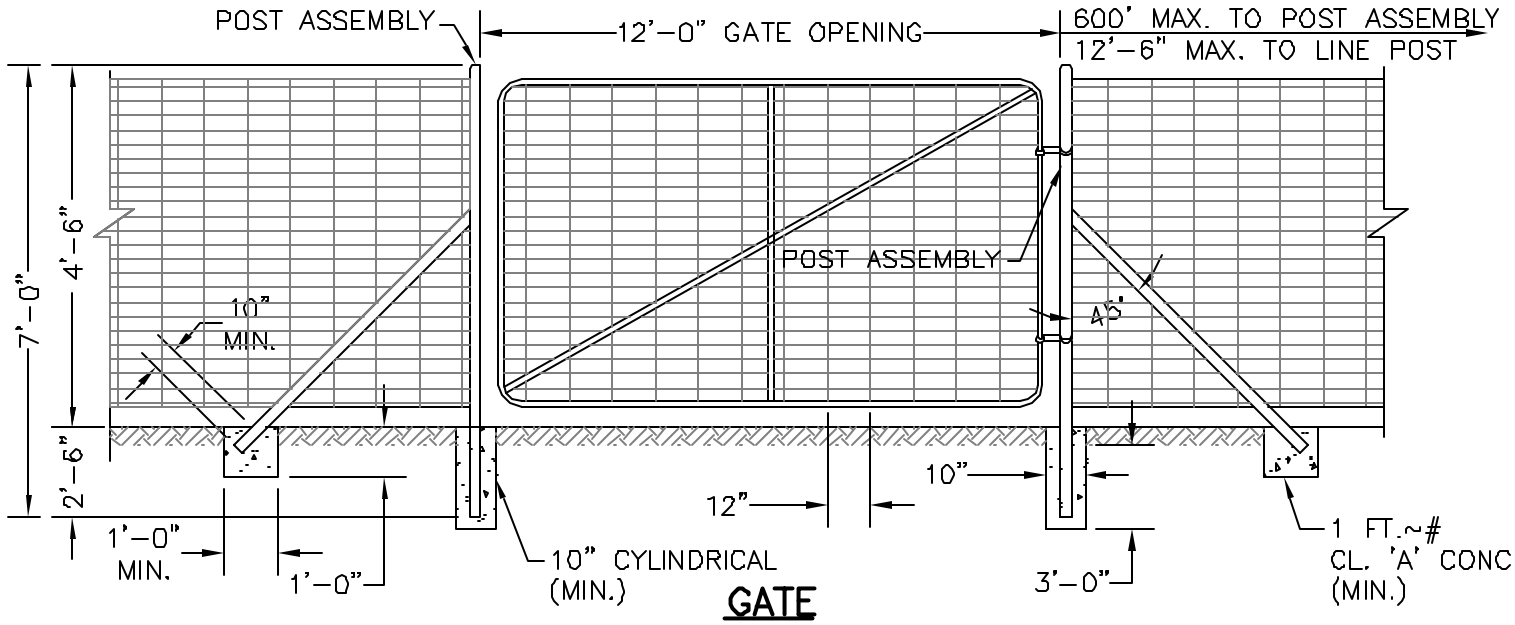

GATE

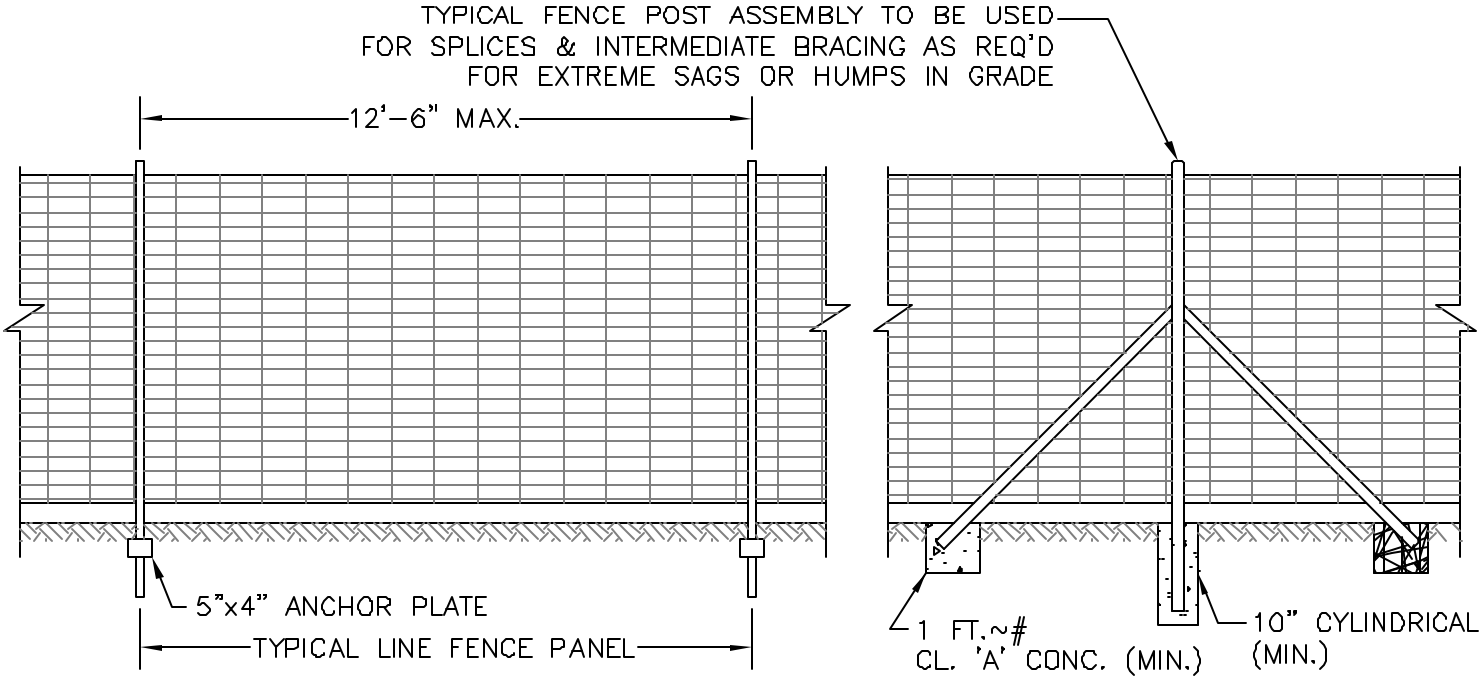

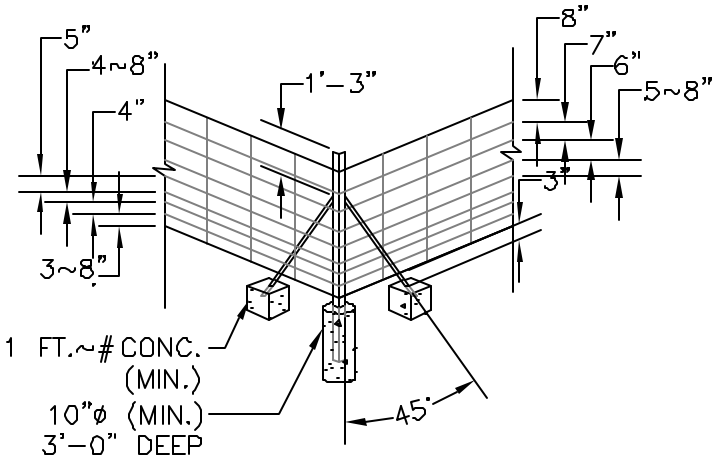

ALL END POSTS SHALL HAVE ONE BRACE; ALL CORNER AND INTERMEDIATE BRACE OR PULL POSTS SHALL HAVE TWO BRACES, WITH A MAXIMUM SPACING BETWEEN POST ASSEMBLIES OF 600 FT. INTERMEDIATE OR LINE POSTS SHALL BE STANDARD STUDDED TEE POSTS. MIN. WEIGHT 1.33 lb/lf.

END POSTS, CORNER POSTS, OR PULL POSTS SHALL BE ANGLE POSTS WITH A MIN. SECTION OF 2-1/2"x2-1/2"x1/4" BRACES SHALL BE ANGLE POST WITH A MIN. SECTION OF 2"x2"x3/16".

WHERE GROUND CONDITIONS PERMIT, FORMS FOR FOOTINGS WILL NOT BE REQUIRED.

CONCRETE SHALL BE CL. 'A'.

DETAIL OF CORNER BRACE POST ASSEMBLY

WOVEN WIRE FENCE

S:\DWG\DETAILS\607-5 WWFENCE.DWG

NOT TO SCALE
FIG. 607-5

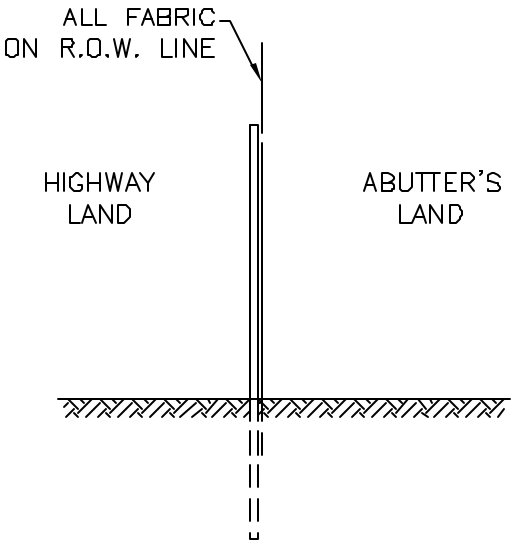

SECTION VIEW ON R.O.W. LINE

2~8" x 2~8" ANGLE POST

WT. 4.1 lb./l.f. (NOMINAL)

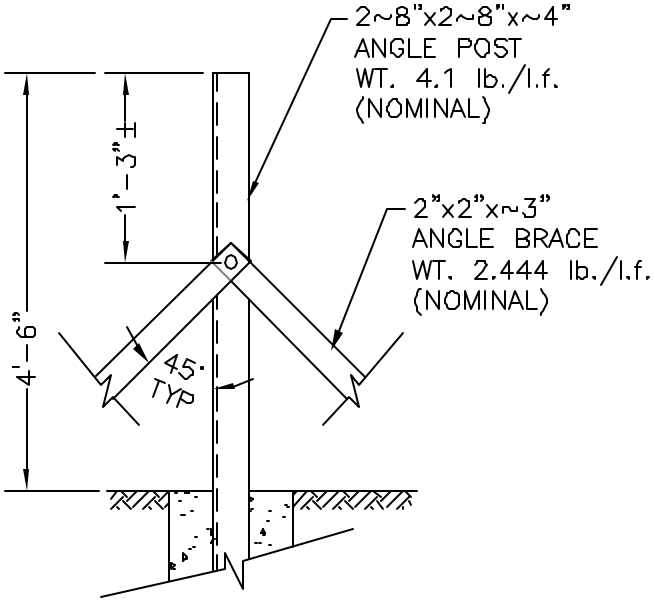

ELEVATION

TYPICAL FENCE POST ASSEMBLY

BRACING DETAILS

S:\DWG\DETAILS\607-6 WWFNCDET.DWG

NOT TO SCALE

FIG. 607-6

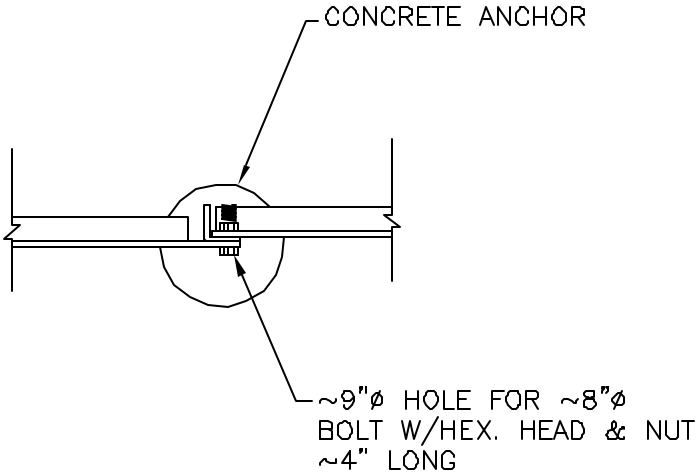

PLAN

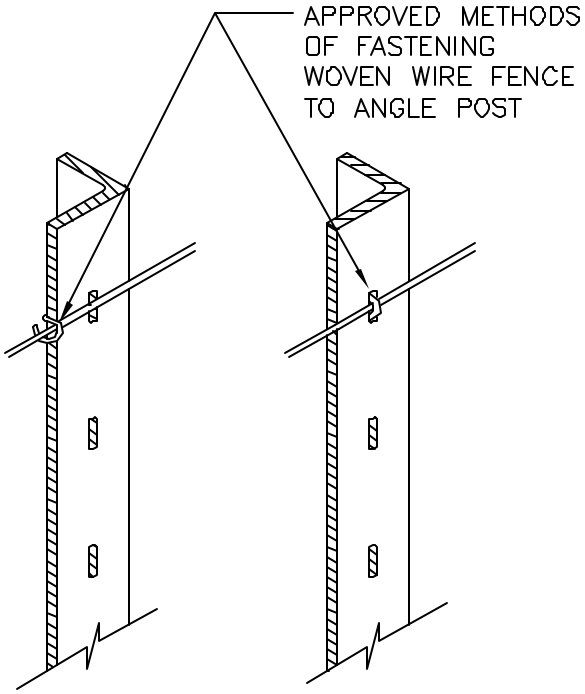

SLOTTED HOLE **SELF-FASTENING**

WIRE FASTENING DETAILS

S:\DWG\DETAILS\607-7 WWFNCDET.DWG

NOT TO SCALE

FIG. 607-7

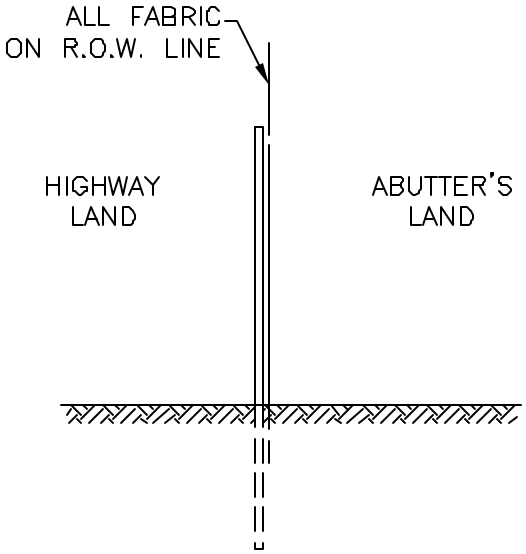

SECTION VIEW ON R.O.W. LINE

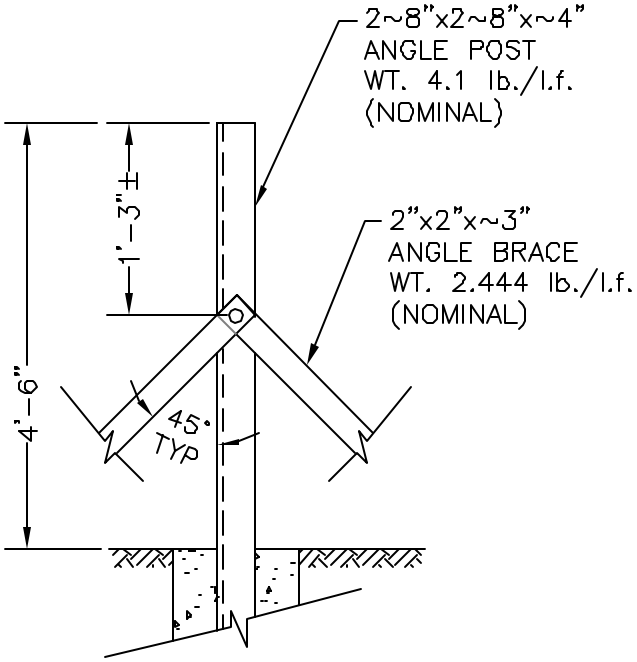

ELEVATION

TYPICAL FENCE POST ASSEMBLY

2~8" x 2~8" ANGLE POST

WT. 4.1 lb./l.f. (NOMINAL)

WOVEN WIRE FENCE DETAILS

S:\DWG\DETAILS\607-8 WWFNCDET.DWG

NOT TO SCALE

FIG. 607-8

SECTION 608 -- SIDEWALKS

Description

1.1 This work shall consist of constructing sidewalks of either bituminous concrete, Portland cement concrete, reinforced when specified or of brick pavers. Portland cement concrete sidewalks shall be coated unless otherwise directed.

Materials

2.1 Base Course Materials shall conform to 304.2.5.

2.2 Portland Cement Concrete shall be Class B conforming to 520.

2.2.1 Coarse Aggregate shall be standard size #67.

2.2.2 Protective Coating shall conform to AASHTO M 233 as specified in 534.

2.3 Steel Mesh shall be in accordance with the Concrete Reinforcing Steel Institute with a minimum spacing of 6 x 6 - W 2.9 x W 2.9.

2.4 Joint Filler shall conform to AASHTO M 153, Type III.

2.5 Bituminous Concrete shall meet the material requirements of 401 except that the composition of mixtures shall conform to the limits of Table 1.

Table 1 - Composition of Mixtures - Master Ranges

Course	Binder	Wearing
Sieve Size	Percentage by Weight Passing	
1/2 inch	95 – 100	--
3/8 inch	90 – 100	98 - 100
No. 4	45 – 75	80 – 100
No. 10	30 - 50	40 - 65
No. 20	17 – 37	25 – 45
No. 80	10 – 30	30 – 33
No. 200	5 - 20	10 - 20
Asphalt Cement		
Percent of Mixture	5.5 – 7.5	6 - 9

2.6 Granite Pavers

2.6.1 Pavers shall conform to ASTM C 902 – Standard Specification for Pedestrian and Light Traffic Paving Brick.

2.6.2 Granite shall be hard, durable, reasonably uniform in appearance and free from weakening seams. Solid veins of feldspar or quartz will not be cause for rejection.

2.6.3 Granite shall be a gray color typical of New Hampshire sources.

2.6.4 Granite pavers shall be 2-1/4-inch nominal thickness, sawn edges. Top surface shall be thermal finished.

2.6.5 All pavers are subject to inspection prior to delivery and at any time during construction. New and salvaged pavers may be rejected or culled out by the ENGINEER because of failure to meet nominal dimensions or because of breakage, chipping, cracking, structural defects or failure to meet the selected color range or texture.

2.7 Brick for Mortar Setting on Concrete Bases.

2.7.1 Brick shall conform to ASTM C 902, Class SX, Type I, Application PS, sand struck, molded. Brick shall not be laminated.

2.7.2 Brick compressive strength shall be 8000 psi, minimum.

2.7.3 Brick cold water absorption shall be 4%, maximum.

2.7.4 Brick shall be English Red City Hall Paver, by Stiles & Hart Brick Company, Bridgewater, Massachusetts, or approved equal. Provide 4" x 8" x 2-1/4" (nominal) bricks for all new construction and applicable reconstruction and repair areas. Provide 4" x 8" x 1-1/4" bricks for applicable repair areas.

2.7.4.1 Bricks may be supplied with or without a parafin coating (150°F) on the unsanded face. This is a CONTRACTOR option to facilitate removal of excess mortar materials from the finished I face of the brick.

2.8 Brick for Dry Setting on Sand or Bituminous Beds.

2.8.1 Brick shall conform to ASTM C 902, Class SX, Type I, Application PS, extruded, 4" x 8" x 2-1/4" (nominal).

2.8.2 Brick shall be selected to match the color and texture of existing pavers in areas to be reconstructed.

2.9 Mortar

2.9.1 Mortar shall conform to ASTM C 270, Type S, and shall have a minimum 28-day compressive strength of 1800 psi.

2.9.2 Latex mortar admixtures shall be numbers 3701 and 4237 as manufactured by Laticrete International, Bethany, CT, or approved equal.

2.9.3 Color for jointing mortar shall be as manufactured by Laticrete, Davis or Scofield, or approved equal, and shall be as required to match existing sidewalks. Brick accent strips in new sidewalks shall have natural mortar color.

2.10 Isolation Joints

2.10.1 Isolation joint filler shall be polypropylene. Elastomeric sealant shall be self leveling polyurethane, white.

2.11 Tack Coat for Bituminous Setting Bed

2.11.1 Tack coat shall be a 2% neoprene latex modified asphalt, conforming to the following:

Mastic (Asphalt Adhesive)

Solids (base)	75+/- 1%
Lbs/gal.	8-8.5 lb.
Solvent	Varsol (over 100° F flash)

Base (2% Neoprene, 10% Asbestos-free Fiber, 88% Asphalt

Melting Point – ASTM D-36	200°F min.
Penetration – 77°F 100 gram load 5 second (.1mm)	23-27
Ductility – ASTM D-113-44 @ 25°C 5 cms/per minute	125 cm min.

2.12 Joint Filler Sand

2.12.1 Sand for joint filling shall be a clean, fine sand with not less than 90% passing the #40 sieve and not more than 20% passing the #200 sieve.

2.13 Hot Bituminous Pavement Setting Bed

2.13.1 The hot bituminous pavement setting bed shall conform with Sections 401 and 403 of the City Standard Specifications. Base course shall be Type "B" and top course shall be Type "F".

Construction Requirements

3.1 Bituminous Sidewalks.

3.1.1 Subgrade and Base Course. The subgrade shall be carefully graded and compacted. The base course material shall be spread and rolled to a smooth surface and to the required cross-section.

3.1.2 General. The plant, mixing methods, and hauling shall conform to the provisions of 401. Sidewalks shall be constructed in accordance with Figure 608-1.

3.1.2.1 Binder Course. The compacted binder course shall be 1 inch less in thickness than the total thickness of the sidewalk.

3.1.2.2 Wearing Course. The compacted wearing course shall be 1 inch in thickness.

3.1.3 Placing. The bituminous concrete shall be spread uniformly in two courses as specified above. Each course shall be rolled with a roller weighing between 500 pounds and 2,000 pounds. The finished surface shall be uniform in appearance, free from irregularities, and shall present a smooth surface. The edges shall be trimmed as directed to secure uniform lines.

3.1.4 Backfilling. The sides of the sidewalk shall immediately be backfilled as necessary with suitable material compacted and finished flush with the top.

3.2 Concrete Sidewalks.

3.2.1 Excavation shall be made to the required depth and to a width that will permit the installation and bracing of the forms. The foundation shall be shaped and compacted to a firm, even surface conforming to the section shown on the plans. All soft and yielding material shall be removed and replaced with acceptable material.

3.2.2 Forms shall be of wood or metal and shall extend for the full depth of the concrete. All forms shall be straight, free from warp, and of sufficient strength to resist the pressure of the concrete without springing. Bracing and staking of forms shall be such that the forms remain in both horizontal and vertical alignment until their removal.

3.2.3 The foundation shall be thoroughly moistened immediately prior to the placing of the concrete. The proportioning, mixing, and placing of the concrete shall be in accordance with 520.3.

3.2.4 Steel mesh reinforcement, when required, shall be place as shown on the plans, using the methods described in 544.3.

3.2.5 The concrete sidewalks shall be placed in alternate slabs 30 feet in length except as otherwise ordered.

3.2.6 Finishing.

3.2.6.1 Concrete shall be finished by use of wood, or magnesium floats, by skilled concrete finishers. A fine grained broom finish may be required to provide a non-skid surface.

3.2.6.2 All outside edges and joints shall be edged with an edging tool having a radius of 1/4 inch.

3.2.7 Joints.

3.2.7.1 Expansion joints shall be of the dimensions specified, and shall be filled with preformed expansion joint filler. The sidewalk shall be divided into sections, as directed, by dummy joints formed by a jointing tool or other acceptable means as directed. These dummy joints shall extend into the concrete for at least 1/3 of the depth and shall be approximately 1/8 inch wide.

3.2.7.2 Construction joints shall be formed around all appurtenances such as manholes and utility poles, extending into and through the sidewalk. Preformed expansion joint filler of the thickness indicated shall be installed between concrete sidewalks and any fixed structure such as a building or a bridge. This expansion joint material shall extend for the full depth of the walk.

3.2.7.3 Concrete shall be cured for a minimum of 7 days. Curing compounds will not be permitted. Plastic sheets or other approved materials shall be placed in close contact with the finished concrete as soon as the concrete has set sufficiently to avoid damage from the placement of coverings. The protective covering shall be maintained vapor-proof in close contact with the concrete for the entire 7 day period. All traffic shall be excluded during the curing period. Vehicular traffic shall be excluded for such additional time as ordered.

3.2.9 Protective Coating.

3.2.9.1 The concrete must be at least 14 days old before application of the linseed oil mixture. The concrete shall have at least a 48 hour period without rain just prior to the application, and shall be cleaned to remove all oil, grease and loose particles which would prevent penetration. Immediately before the application, an air blast shall be directed over the concrete so as to remove all dust.

3.2.9.2 The mixture may be sprayed, brushed, squeegeed, or rolled. If a sprayer is used, the nozzle shall be held within 18 inches of the concrete or as directed. Unless otherwise directed, the temperature of the concrete and air shall be at least 40 degrees F at the time of application.

3.2.9.3 Two coats of protective coating shall be applied. The first coat shall be applied to the surface at a rate to obtain maximum penetration possible, taking care to prevent the material from discoloring curbs or other parts of the work. The second coat shall be applied as a seal coat, with special attention given to the lighter appearing areas. The rate of application shall be approximately 0.025 gallons per square yard for the first coat and 0.015 gallons per square yard for the second coat. The second application shall not be made until the concrete has regained its dry appearance, and in any event not until at least 24 hours have passed.

3.2.9.4 The linseed oil mixture is readily flammable and all due precautions shall be observed.

3.3 Brick Sidewalks

3.3.1 Work includes pavers dry set on sand and bituminous beds and mortar set on concrete bases. All workmen shall be experienced in the installation of brick and granite masonry paving.

3.3.2 Verify that substrate is ready and acceptable to support pavers and traffic loads.

3.3.3 Verify that substrate elevations and slopes are correct.

3.4 Storage of Pavers

3.4.1 Store all pavers on raised platforms in such a manner as to prevent damage or intrusion of foreign matter. Storage piles or stacks shall be located to avoid or be protected from heavy or unnecessary traffic. Materials shall be stored under an approved roof or covered with waterproof tarpaulins, at all times, except when masons are working and using the materials.

3.5 Bituminous Setting Bed – Reconstruction Areas

3.5.1 Existing pavers shall be removed and stockpiled 2-feet minimum beyond bituminous pavement match line. Saw cut existing bituminous bed. Place new bituminous pavement flush with existing bed.

3.5.2 Install isolation joint filler as directed.

3.5.3 Sweep entire surface of bituminous bed clean of dirt and debris.

3.6 Setting Bricks and Granite Pavers on Bituminous Bed

3.6.1 Where called for, layout granite accent grid pattern true and square with chalk or string lines.

3.6.2 The tack coat shall be applied by squeegeeing or trowelling over the surface of the bituminous concrete setting bed. If trowelled, the trowel shall be serrated with serrations not to exceed 1/16 inch.

3.6.3 Bricks and granite shall be set in tack coat over the compacted bituminous concrete bed. Match existing patterns.

3.6.4 Adjacent bricks and pieces of granite shall be placed "hand tight" with surface gaps of 1/16 inch to 1/4 inch.

3.6.5 Sprinkle sand over surface and sweep into joints. Moisten joints and recover with additional sand until firm joints are achieved. Remove excess sand.

3.7 Installation over Concrete Base

3.7.1 In existing sidewalk areas to be reconstructed, saw cut existing masonry at joint lines to sound masonry. Remove damaged masonry, concrete and debris. Place and compact crushed gravel as needed. Place and cure a 4-inch concrete slab to match existing. Moist cure for 14 days prior to installing brick pavers.

3.7.2 In new sidewalk areas, place and cure the concrete sidewalk to proper lines and grades with any accent block-outs accurately formed. Moist cure for 14 days prior to installing bricks.

3.7.3 After construction and curing of cement concrete base, the base shall be thoroughly cleaned of all dust, dirt and foreign matter prior to application of mortar setting bed.

3.7.4 The concrete base shall be thoroughly saturated with water before laying bricks and the surface of the slab shall be dry prior to application of mortar bed and bricks. The base shall be coated with a bond coat of Laticrete 3701, or approved equal, and neat cement just prior to placing the setting bed.

3.7.5 Bricks shall be laid in a full setting bed of mortar at the proper level, with the unsanded, waxed side up. Mortar shall be mixed with Laticrete 3701, or approved equal, in place of water. Trowel a mixture of one part Portland Cement and one part Silica Sand (or use Laticrete 211 pre-mix) wetted with Laticrete 4237, or approved equal, on the back of each pre-wetted paver and set the paver into the freshly installed setting bed, beating the paver level and true. Leveling of the paver should be done as the setting operation proceeds so that it is not necessary to disturb the pavers set earlier. Mortaring of joints should not proceed until the underbed sets and hardens (24 hours or more). Follow manufacturer's instructions for latex admixtures.

3.7.6 Joints shall be solidly filled to the full depth with mortar which has the colorant added as specified (existing sidewalks only). Joints shall be a nominal 3/8 inch to 1/2 inches wide. Care shall be taken not to smear mortar on adjoining brick, granite curbs, or other surfaces. Jointing mortar shall be mixed with Laticrete 3701, or approved equal, in place of water.

3.7.7 After the initial set of mortar, joints shall be finished by tooling with a one (1) inch diameter non-staining jointer (a hard maple jointer would be preferred) to produce a slightly concave polished joint, free from drying cracks.

3.7.8 After installation, the joints shall be cured for at least five days by covering with curing paper or other approved material.

3.7.9 After the joints have been cured, they shall be cleaned. If waxed, the wax shall be removed with high-pressure steam with equipment having the capacity of 150 gallons per hour, 325°

coil temperature, at 120 psi. Care shall be taken not to damage mortar by overheating any area.

3.7.10 If waxed pavers are not used, the CONTRACTOR shall thoroughly clean the brick surface using mechanical means, soap and water. In extreme cases, an acid solution may be used, followed by thorough rinsing with fresh water. No mortar shall remain on the brick surfaces after cleaning operations.

3.7.11 All imperfect or frozen mortar joints shall be raked out to a depth of 3/8 inch and repointed.

3.7.12 No pavers shall be laid in inclement weather or when the temperature is 40°F, and dropping, nor shall any work be done on rising temperatures until the temperature reaches 40°F, and subgrade is free of frost.

3.7.13 Protect pavers from pedestrian and vehicular traffic for 72 hours, minimum, after joints are mortared.

Method of Measurement

4.1 Sidewalks will be measured by the square yard of finished surface, computed to the nearest 0.1 of a square yard.

4.1.1 Areas of curb will not be included in this item.

4.2 Base course material will be measured by the cubic yard based on the product of the area of sidewalk approved for payment and the depth shown on the plans or ordered.

Basis of Payment

5.1 The accepted quantities of sidewalks will be paid for at the contract unit price per square yard of the type and depth specified complete in place.

5.2 Base course material will be paid for under 304.

5.3 Necessary excavation will be paid for under 203.

5.4 Protective coating for concrete shall be subsidiary.

Pay items and units:

608.1	__ Inch Bituminous Sidewalk	Square Yard
608.2	__ Inch Concrete Sidewalk	Square Yard
608.3	__ Inch Reinforced Concrete Sidewalk	Square Yard

608.3	Brick Sidewalk	Square Yard

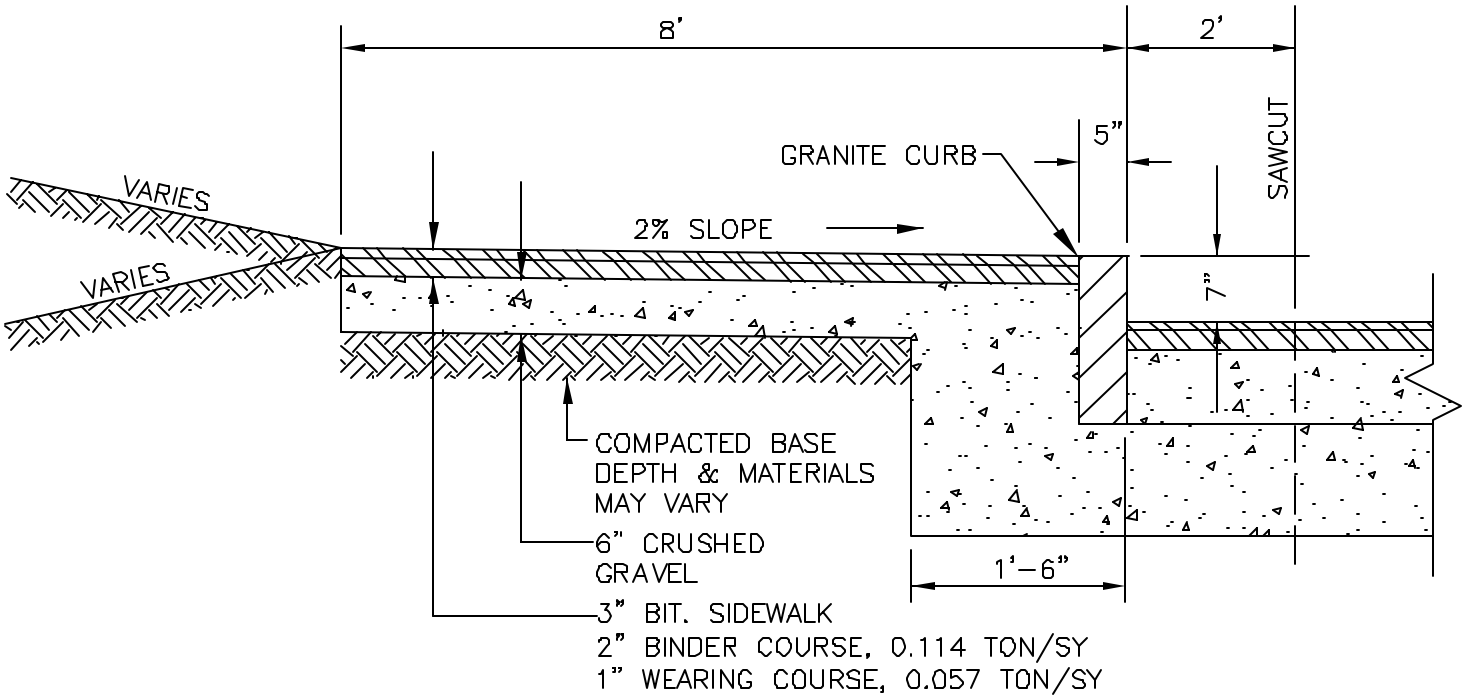

BITUMINOUS SIDEWALK

S:\DWG\DETAILS\608-1 SIDEWALK.DWG

NOT TO SCALE

FIGURE 608-1

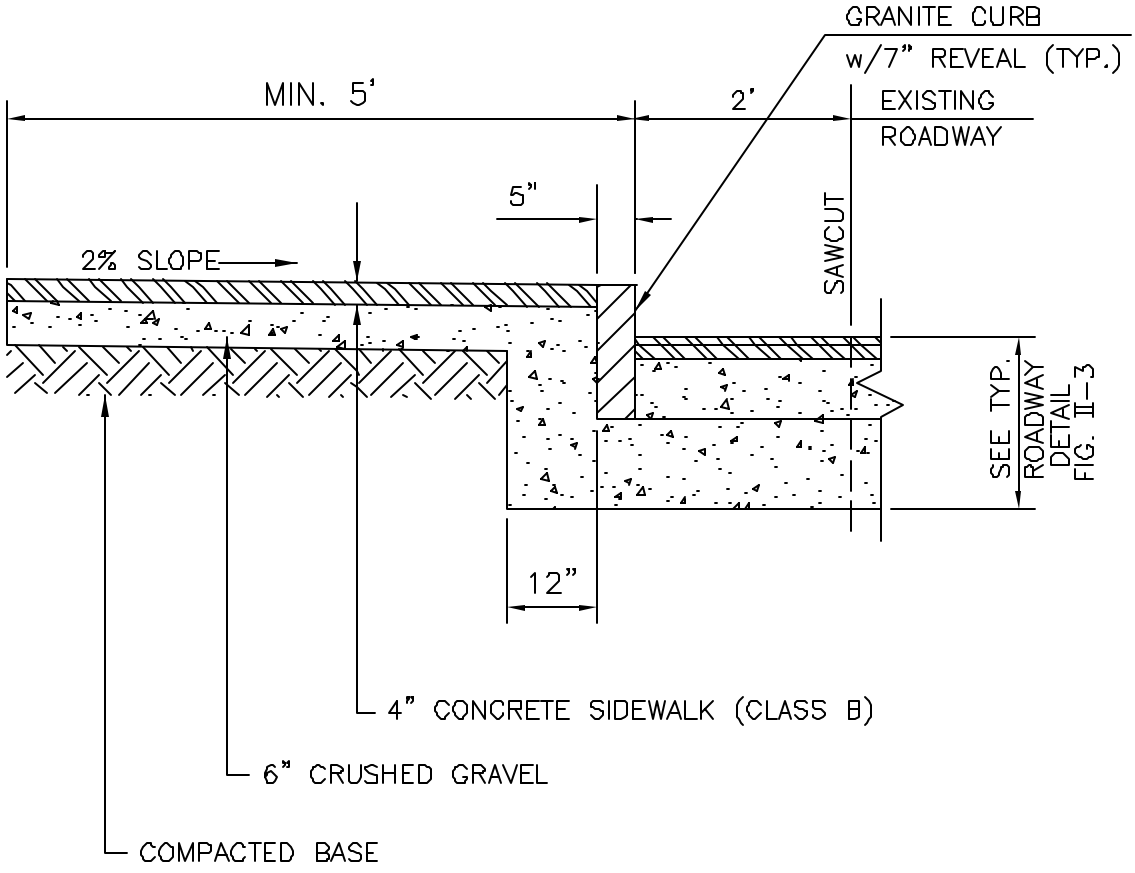

CONCRETE SIDEWALK DETAIL

S:\DWG\DETAILS\608-2 SWLK-CON.DWG

NOT TO SCALE
FIGURE 608-2

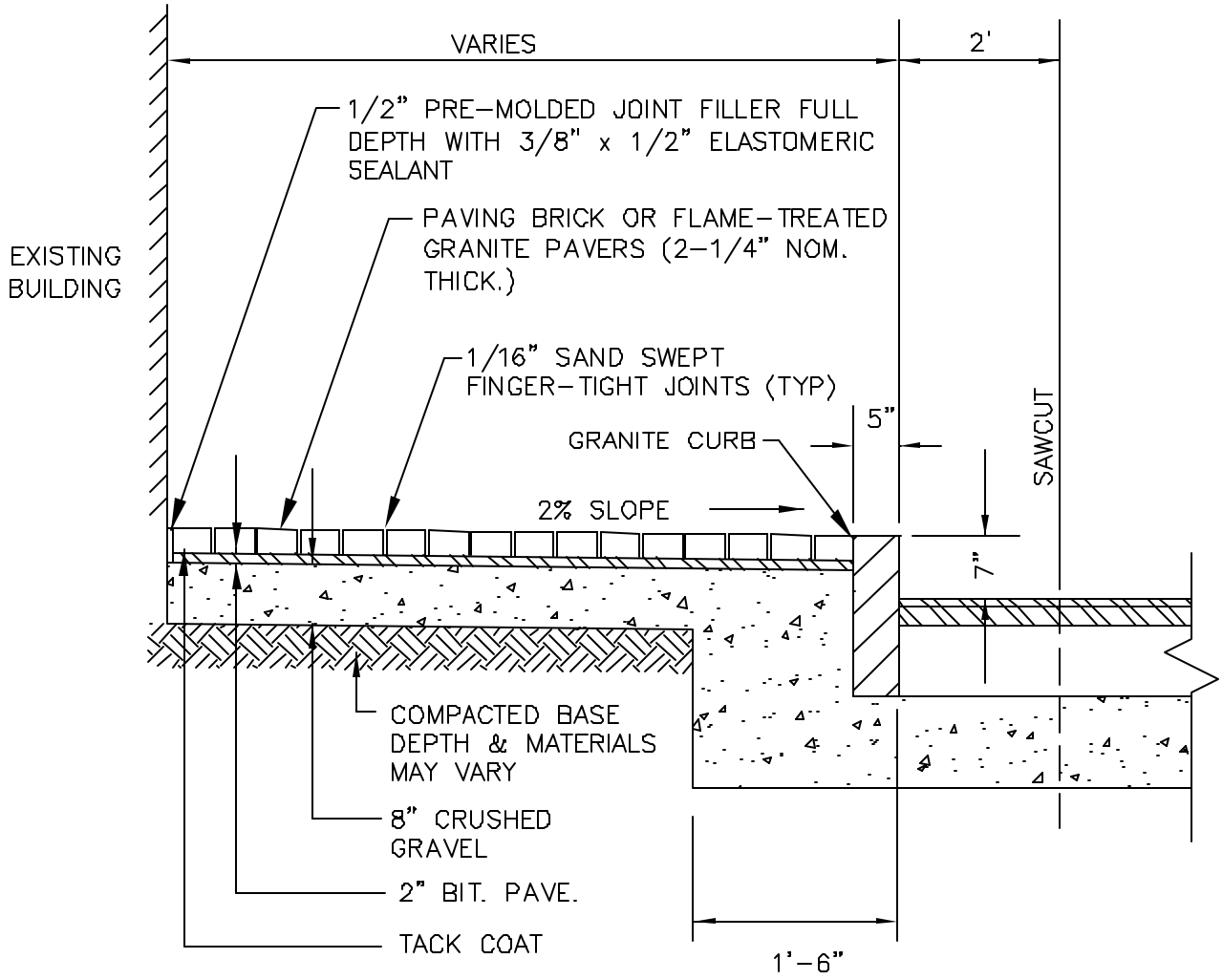

NOTE:
VIBRATE PAVERS INTO SCREEDED BITUMINOUS SETTING. MAINTAIN 1/16" JOINTS BETWEEN PAVERS AND SWEEP WITH SAND.

BRICK SIDEWALK

S:\DWG\DETAILS\608-3 SIDEWALK-BRICK.DWG

NOT TO SCALE

FIGURE 608-3

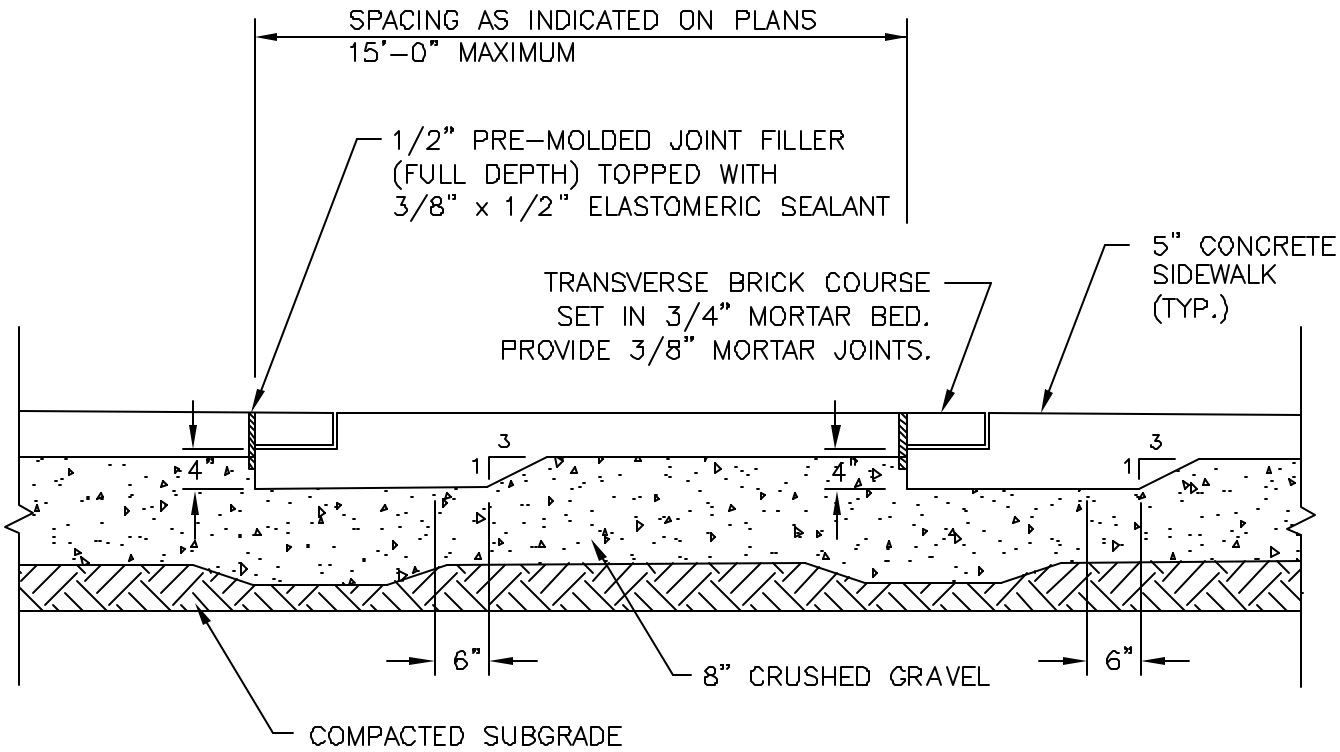

LONGITUDINAL SECTION

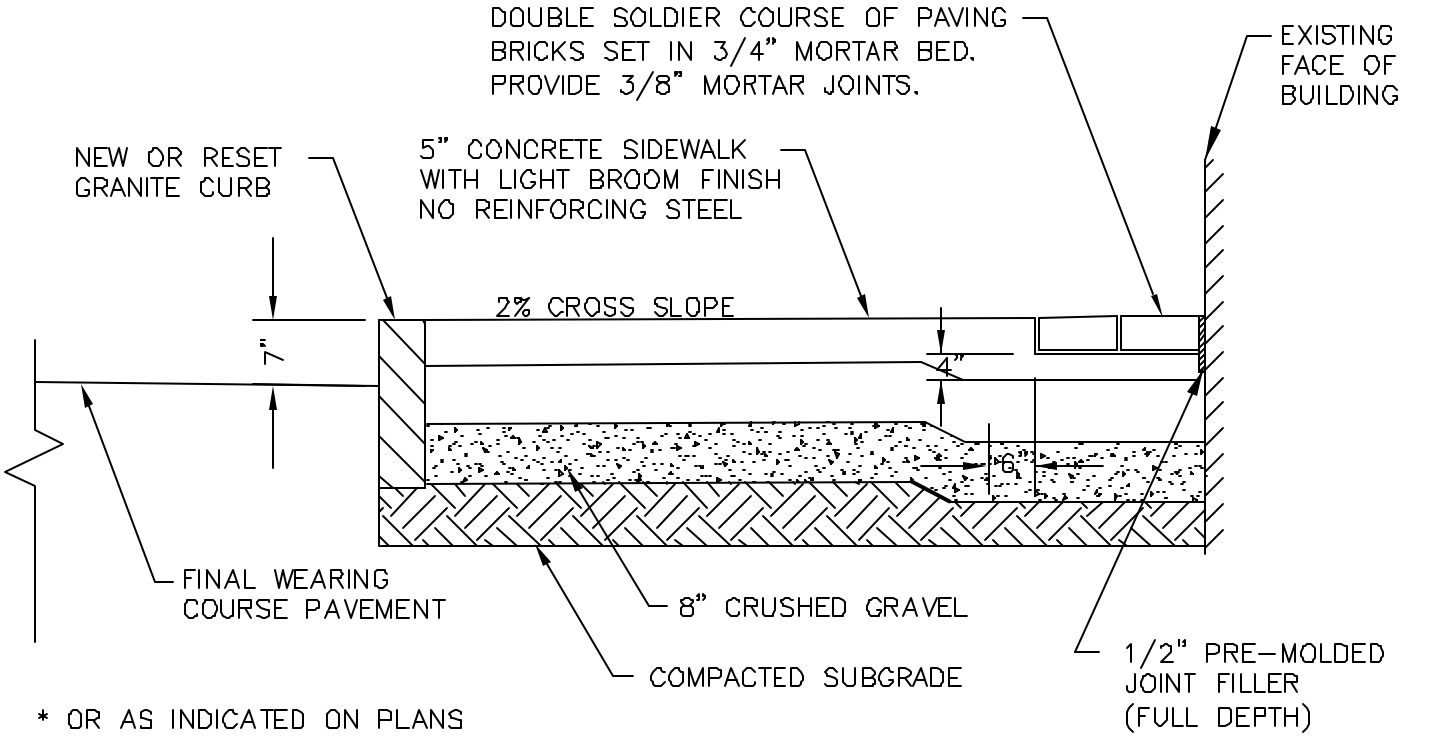

TRANSVERSE SECTION

TYPE 'C' CONCRETE SIDEWALKS (WITH BRICK ACCENTS)

S:\DWG\DETAILS\608-4 SWLK-CONC. W/BRICK ACCENT.DWG

NOT TO SCALE

FIG 608-4

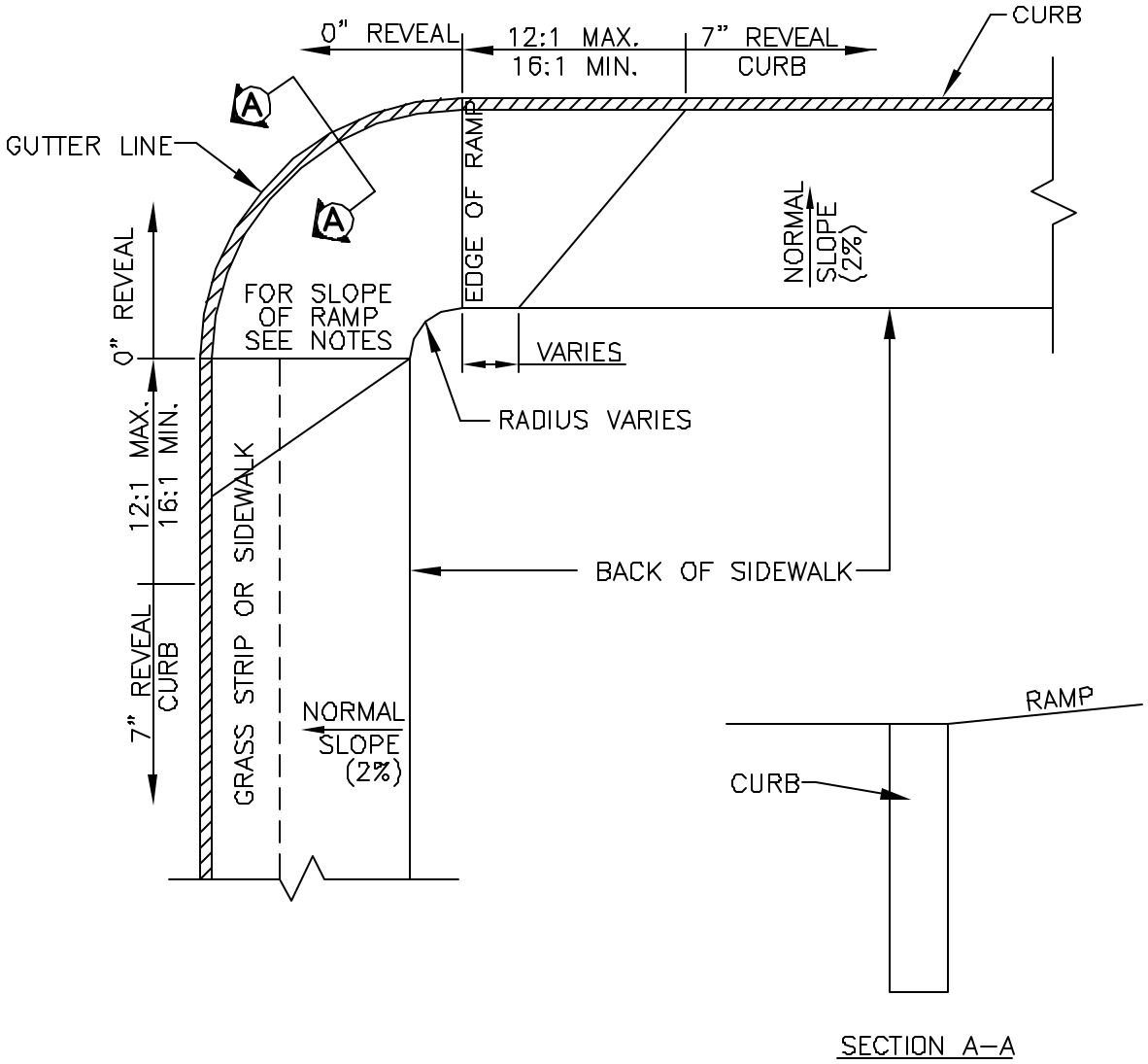

1) SLOPE OF RAMP VARIES WITH SIDEWALK WIDTH AND HEIGHT, WITH A MAXIMUM SLOPE OF 12:1 AND MINIMUM SLOPE OF 16:1.
2) A BROOM FINISH TRANSVERSE TO THE SLOPE OF THE RAMP SHALL BE USED ON PORTLAND CEMENT CONCRETE RAMPS.
3) MAINTAIN THE NORMAL GUTTER PROFILE THROUGHOUT THE RAMP AREA.
4) INTERCEPT DRAINAGE ALONG THE CURB IN ADVANCE OF THE RAMP.
5) MAINTAIN 0" OF CURB REVEAL AT THE RAMP. (SEE SECTION A–A)
6) A MINIMUM OF 4 FEET CLEAR SHALL BE MAINTAINED AT ANY PERMANENT OBSTACLE IN ACCESSIBLE ROUTE (IE. HYDRANTS, UTILITY POLES, SIGNS, ETC.)

CORNER SIDEWALK RAMP

S:\DWG\DETAILS\608–5 SWLK–CDR.DWG

NOT TO SCALE

FIG 608–5

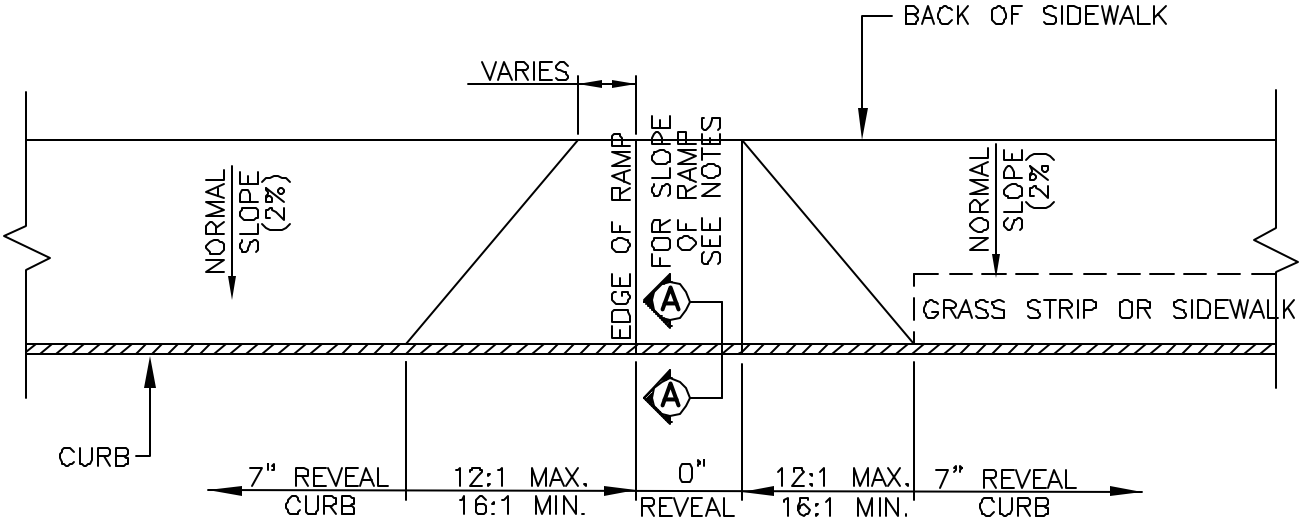

PLAN

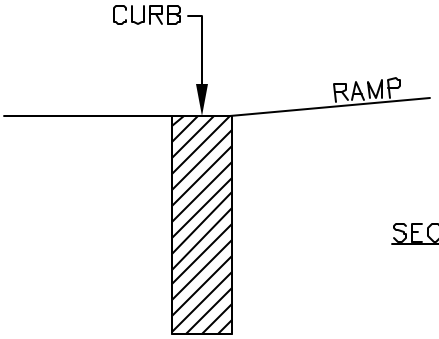

SECTION A–A

1) SLOPE OF RAMP VARIES WITH SIDEWALK WIDTH AND HEIGHT, WITH A MAXIMUM SLOPE OF 12:1 AND MINIMUM SLOPE OF 16:1.
2) A BROOM FINISH TRANSVERSE TO THE SLOPE OF THE RAMP SHALL BE USED ON PORTLAND CEMENT CONCRETE RAMPS.
3) MAINTAIN THE NORMAL GUTTER PROFILE THROUGHOUT THE RAMP AREA.
4) INTERCEPT DRAINAGE ALONG THE CURB IN ADVANCE OF THE RAMP.
5) MAINTAIN 0" OF CURB REVEAL AT THE RAMP. (SEE SECTION A–A)
6) A MINIMUM OF 4 FEET CLEAR SHALL BE MAINTAINED AT ANY PERMANENT OBSTACLE IN ACCESSIBLE ROUTE (IE. HYDRANTS, UTILITY POLES, SIGNS, ETC.)

TYPICAL SIDEWALK RAMP

S:\DWG\DETAILS\608-6 SWLK-RMP.DWG

NOT TO SCALE
FIG. 608-6

SECTION 609 -- CURBS

Description

1.1 This work shall consist of constructing or resetting curbing as shown on the plans or as ordered.

Materials

2.1 General. Curb shall be constructed of new granite curbing, salvaged granite curbing, or bituminous concrete, as indicated in the proposal.

2.2 Granite shall be hard, durable, reasonably uniform in appearance, and free from weakening seams; solid quartz or feldspar veins will not be cause for rejection.

2.2.1 Surfaces of each stone shall be finished in accordance with the requirements of Table 609-1. All comparable curbs on the project shall have similar finishes.

2.2.2 When the slope curb item description does not indicate a specific height, the size of the stone shall be that as shown on the standard entitled "Granite Slope Curb". The setting reveal (the vertical height of the exposed face when set) shall be 4 inches or as shown on the plans.

2.3 Salvaged Granite Curbing shall, if necessary, be dressed to obtain joints of the same width as specified for new curb.

TABLE 609-1
FINISHED SURFACES AND TOLERANCES, INCHES
FOR GRANITE CURBING

TYPE	AREA	FINISHED SURFACE	TOLERANCE, INCHES(a)	
STRAIGHT OR CURVED	Top	5 inches wide or as otherwise shown, sawn true plane.	+1/8	-1/8
		Front and back arris lines pitched straight and parallel.	+1/8	-1/8
	Front face	Right angle to top, approximately true plane. No drill holes showing in top 10 inches.	+1	-1/2
Back face:	Exposed	Plane parallel with front face. Straight split to 1-1/2 inches below exposed surface. No larger than 1/4 inch segment of drill holes showing in arris lines.	+1	-1
	Concealed	Below 1-1/2 inches from exposed surface.	+1-1/2	-1-1/2
Bottom:		Approximately parallel to top. Minimum width: 3 inches	See plans.	
Ends:	Exposed portion	Square with planes of top and face.		
Joints:	Exposed Concealed	Optimum width: 1 inch. To break back no more than 4 inches.	+3/4	-3/4
Lengths of stones		3 feet to 10 feet with 50 percent of sections to be 5 feet or greater, or as indicated		

TYPE	AREA	FINISHED SURFACE	TOLERANCE, INCHES(a)	
BRIDGE		Conform to Straight Curb except as specified below.		
	Exposed surfaces	No drill holes showing; none in back face arris lines.		
	Bottom	Width equal to width of top.	+1	-1
Joints:	Exposed	Maximum width: 1/2 inch To break back no more than 1 inch.	+1/4	
	Concealed			
Surface		**To conform to that of Curb A or to other curb to which it is adjacent.**		
Inlet		**Opening shall be bush hammered or flame finished, to a reasonably smooth finish.**		
SLOPE	Arris lines	Straight and true on top, front and ends. Drill holes not deeper than ¼ inch allowed in arris lines.	+1/4	-1/4
	Faces:			
	Exposed part	Planes; no drill holes in faces longer than 8 inches or deeper than 1/4 inch.	+1	-1
	Concealed part	Drill holes not objectionable.		
	Ends	Square with face except as indicated.		
	Joints	On tangent, maximum width: 1 inch. On curves over 15 foot radius, widen top or bottom from 1 inch as necessary. On curves with 15 foot radius and under, use radial joints or curved curb as indicated.	+1/2	-1/2
	Length of stones	Min. and max. specified lengths.	See plans.	

(a) + Projection in stone; -Depression in stone

2.4 Bituminous Concrete shall meet the requirements of 401 except that the composition of the mixture shall conform to the limits of Table 609-2. The mixture shall extrude properly with a uniform, smooth appearance.

TABLE 609-2
REQUIRED GRADING FOR BITUMINOUS CONCRETE CURB

SIEVE SIZE	PERCENTAGE BY WEIGHT PASSING
3/4 inch	100
1/2 inch	86 - 100
3/8 inch	75 - 100
No. 4	60 - 80
No. 10	40 - 60
No. 40	18 - 35
No. 200	3 - 10
Asphalt Cement, percent of Mix:	7.0 - 9.0

2.4.1 Polyester fibers, as approved by the Engineer, shall be uniformly incorporated in the dry mix in the proportion of approximately 1/4 percent of the total batch weight.

2.4.2 Acrylic emulsion curb paint shall conform to 708-NH 4.31.

2.4.3 Beads for reflectorization shall conform to 708-NH 4.13.

2.5 Cement Mortar shall conform to 707 except that cement mortar for bedding curb (bridge) shall be an approved mortar consisting of sand, cement, and additives necessary to produce a non-shrinking, non-ferrous grout when mixed with water at the rate recommended by the manufacturer. When the bedding is more that 3/4 inch in height, a 3/8 inch washed stone may be mixed into the mortar at the maximum of 1 part stone to 4 parts dry mortar.

2.6 Curb Anchors shall be steel of shapes and dimensions on the plans.

Construction Requirements

3.1 Granite Curb, New and Reset.

3.1.1 Excavation for curb shall be made to the required depth, and the base upon which the curb is to be set shall be compacted to a firm, even surface.

3.1.2 Installation of curbing shall be so that the front top arris line conforms to the line and grade required. All spaces under the curbing shall be filled with material
conforming to the requirements for roadway base course. This material shall be thoroughly tamped.

3.1.3 Joints shall be of the width indicated in Table 609-1. They shall be pointed with mortar and the exposed portions finished with a jointer.

3.1.4 Curbing to be salvaged and reset shall be carefully removed and stored. The Contractor shall replace any curbing damaged or lost because of his negligence. All exposed portions of reset curbing shall be cleaned by sand blasting.

3.1.5 Backfilling shall be accomplished immediately after the curb is set and jointed. Backfill shall be approved material, placed and thoroughly tamped.

3.1.6 Bridge curb shall be set on a mortar bed of non- shrink mortar. The front face shall be plumb and the top shall conform to the required line and grade. All joints shall be grouted and the exposed portions finished with a jointer. Long and short lengths of curb shall be laid alternately unless otherwise ordered.

3.1.6.1 Curb anchors shall be set and grouted as shown on the plans.

3.1.7 Granite curb inlets shall be set in full mortar beds and shall conform to the required line and grade.

3.2 Bituminous Concrete Curb.

3.2.1 Prior to placing the curbing, the surface of the pavement shall be cleaned as directed and painted with a tack coat of bituminous material when ordered.

3.2.2 The curbing shall be placed by means of an approved extruding curb paver. The curbing shall be compacted to a minimum density of 90 percent of a laboratory compacted sample of the same mix. A tight bond shall be obtained between the prepared course and the curb and between the necessary curb joints.

3.2.3 Unless unpainted curb is specified, after a curing period which shall be as long as project conditions permit, but not less than 7 days, exposed surfaces of curbing shall be sprayed with 2 coats of acrylic emulsion curb paint. Primer and finish coats shall be applied at a rate to obtain a wet thickness of 16 mils each application. The finish coat is intended to serve as the vehicle for holding the beads for reflectorization.

3.2.4 The beads for reflectorization shall be applied by the drop-on method at the time of application of the second coat of paint, evenly and uniformly, at the rate to obtain
the adhesion of the maximum number of beads possible. Dead spots, found upon testing after dark, when ordered, shall be repainted and additional beads applied.

Method of Measurement

4.1 Curb will be measured by the linear foot to the nearest 0.1 of a foot from end to end along the lower edge of the exposed face of the curbing. Only curbing actually cut to a radius will be considered

as curved curb. Slope curb shown or ordered to be cut on radial joints, (not square with face) will be measured separately.

4.2 Granite curb inlets will be measured by the number of units installed.

Basis of Payment

5.1 The accepted quantities of curb will be paid for at the contract unit price per linear foot for each type of curbing specified complete in place, except that all special cutting ordered due to changes in the plans will be paid for as Extra Work.

5.2 The accepted quantities of granite curb inlets will be paid for at the contract unit price per each complete in place.

5.3 Roadway base course material adjacent to the curb will be paid for under the appropriate items and no deduction will be made for the volume occupied by the curb. In the process of setting the curb, excavation and backfill of the material that has been placed by the Contractor will be considered as incidental to the item.

Pay items and units:

609.01	Straight Granite Curb	L.F.
609.02	Curved Granite Curb	L.F.
609.21	Straight Granite Slope Curb	L.F.
609.22	Straight Granite Slope Curb with Radial Joints	L.F.
609.23	Curved Granite Slope Curb	L.F.
609.41	Granite Curb Inlets A	Each
609.42	Granite Curb Inlets B	Each
609.5	Reset Granite Curb	L.F.
609.8	Bituminous Concrete Curb	L.F.
609.81	Bituminous Concrete Curb, Unpainted	L.F.

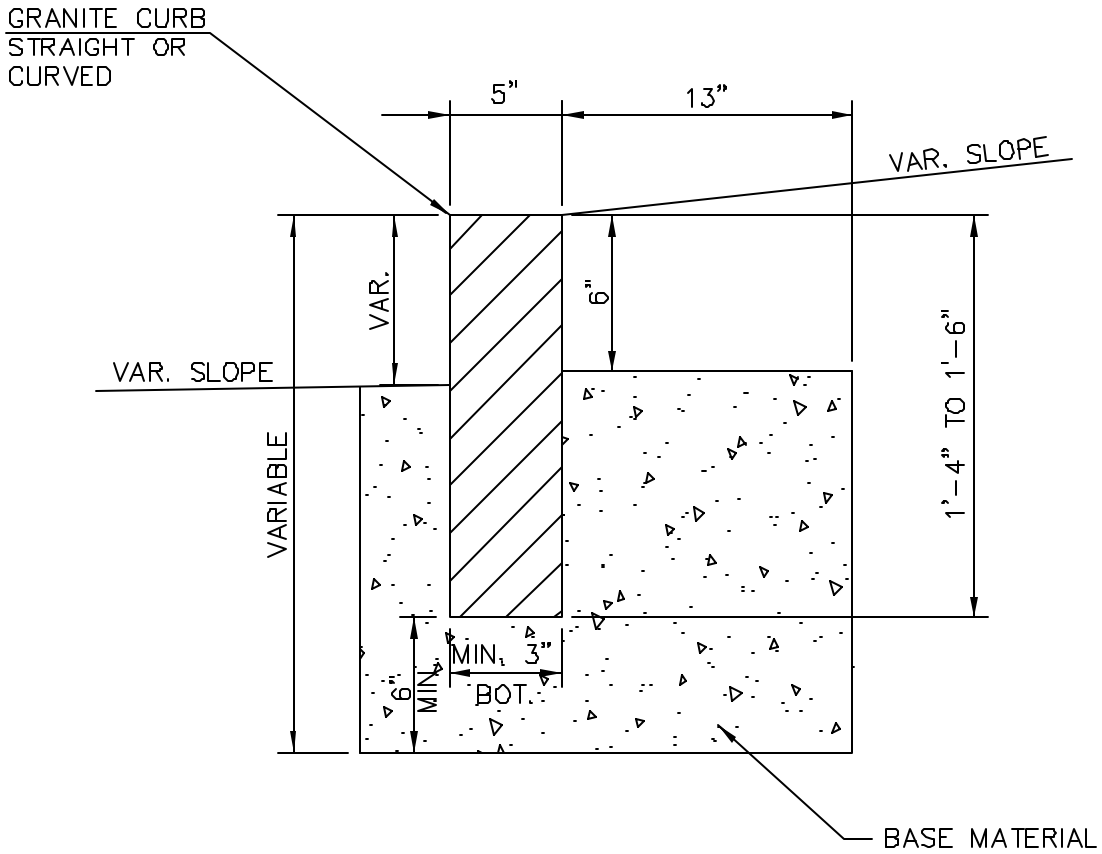

SECTION

RADIUS	MAX. LENGTH
21'	3'
22'-28'	4'
29'-35'	5'
36'-42'	6'
43'-49'	7'
50'-56'	8'
57'-60'	9'
OVER 60'	10'

NOTE:

MINIMUM LENGTH OF CURB STONES - 3'

MAXIMUM LENGTH OF CURB STONES - 10'

MAXIMUM LENGTH OF STRAIGHT CURB STONES LAID ON CURVES - SEE CHART.

ADJOINING STONES SHALL HAVE THE SAME OR APPROXIMATELY THE SAME LENGTH.

CURB ENDS TO BE TIPPED DOWN.

GRANITE CURB

S:\DWG\DETAILS\609-1 CURB-G.DWG

NOT TO SCALE

FIG. 609-1

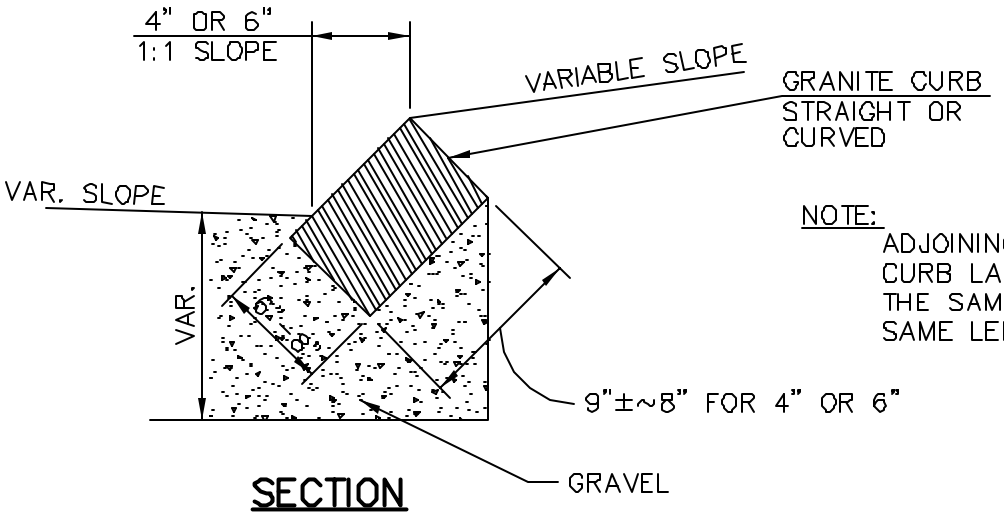

SECTION

NOTE:
ADJOINING STONES OF STRAIGHT CURB LAID ON CURVES SHALL HAVE THE SAME OR APPROXIMATELY THE SAME LENGTH.

MINIMUM LENGTH OF STRAIGHT CURB STONES – 18"

MAXIMUM LENGTH OF STRAIGHT CURB STONES – 8'

MAXIMUM LENGTH OF STRAIGHT CURB STONES LAID ON CURVES – SEE CHART

RADIUS FOR STONES WITH SQUARE JOINTS	MAX. LENGTH
16'–28'	1'–6"
29'–41'	2'
42'–55'	3'
56'–68'	4'
69'–82'	5'
83'–96'	6'
97'–110'	7'
OVER 110'	8'

FOR 1' OR 1.5' RADIUS = R

R' = 5~0" FOR 1' R

R' = 11~0" FOR 1.5' R

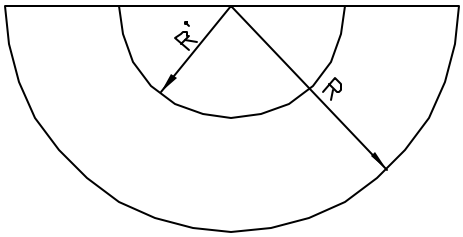

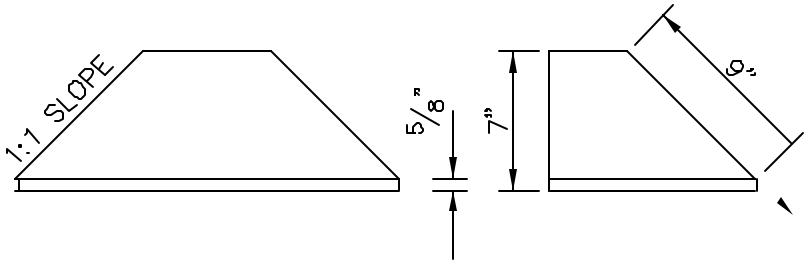

USE WITH SLOPE CURB

GRANITE SLOPE CURB DETAILS

S:\DWG\609-2 DETAILS\CURB-SLP.DWG

NOT TO SCALE

FIG. 609–2

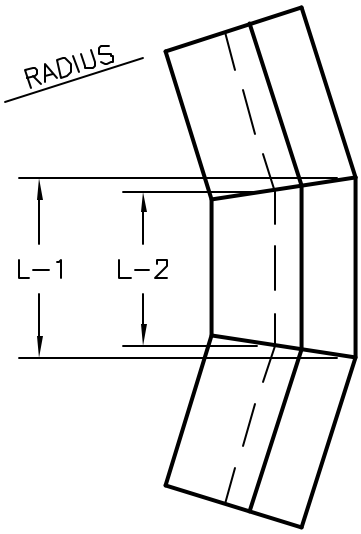

DETAIL FOR CUTTING STRAIGHT GRANITE SLOPE CURB WITH RADIAL JOINTS. (FOR USE WITH 2' TO 15' RADII)

L-1	RADIUS											
	2'	2.5'	3'	3.5'	4'	5'	6'	8'	10'	12'	14'	15'
	L-2											
9"	6.50"											
12"	8.75"	9.50"										
13"	9.50"	10.25"										
14"	10.25"	11.00"	11.50"									
15"	11.00"	11.75"	12.25"									
16"	11.75"	12.50"	13.25"	13.50"								
17"	12.50"	13.50"	14.00"	14.50"	14.75"	15.25"	15.50"	16.00"	16.00"	16.25"	16.25"	16.25"
18"	13.25"	14.25"	14.75"	15.25"	15.50"	16.00"	16.50"	16.75"	17.00"	17.25"	17.25"	17.25"
19"	14.00"	15.00"	15.75"	16.00"	16.50"	17.00"	17.25"	17.75"	18.00"	18.25"	18.25"	18.25"
20"	14.75"	15.75"	16.50"	17.00"	17.25"	18.00"	18.25"	18.75"	19.00"	19.00"	19.25	19.25"
							19.25"	19.50"	20.00"	20.00"	20.25"	20.25"
							20.00"	20.50"	20.75"	21.00"	21.25"	21.25"
							21.00"	21.50"	21.75"	22.00"	22.25"	22.25"
							22.00"	22.50"	22.75"	23.00"	23.00"	23.00"
											24.00"	24.00"
											25.00"	25.00"
											26.00"	26.00"
											27.00"	27.00"
											28.00"	28.00"
											28.75"	29.00"
											29.75"	29.75"
											30.75"	30.75"

CUTTING STRAIGHT GRANITE SLOPE CURB WITH RADIAL JOINTS

S:\DWG\DETAILS\609-3 RAD-JTS.DWG

NOT TO SCALE

FIG. 609-3

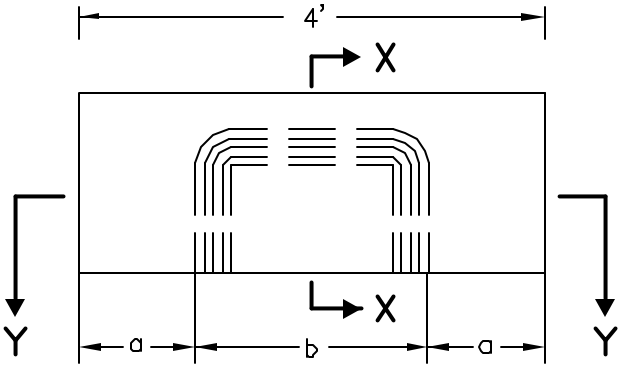

ELEVATION

TO BE USED WITH C.B.'S AND D.I.'S
AS CALLED FOR ON THE PLANS.

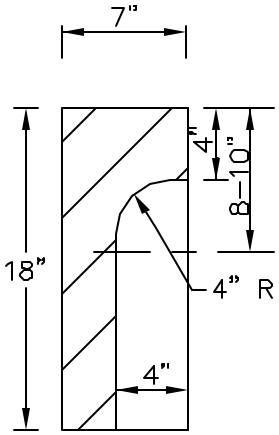

SECTION X-X

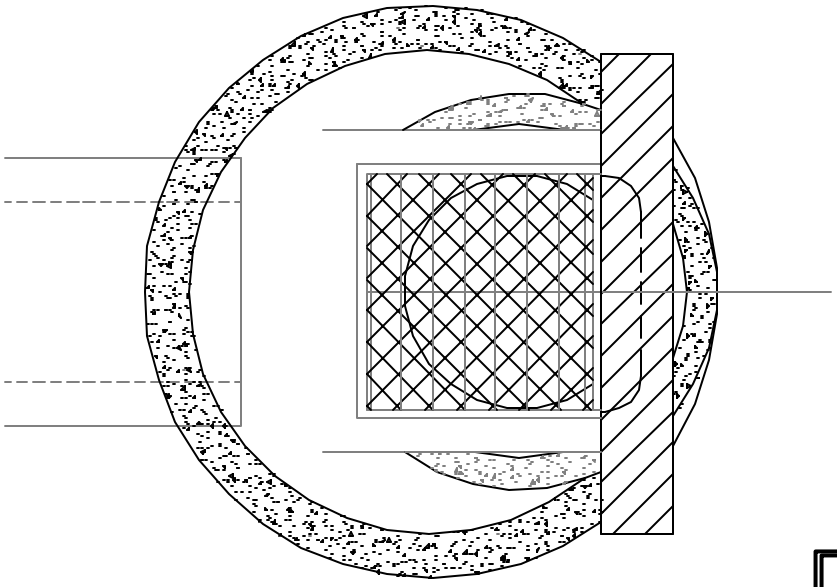

PLAN

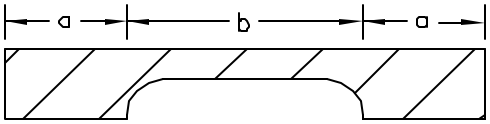

SECTION Y-Y

TYPE INLET	a	b
A	12"	24"
B	13.25"	21.5"

GRANITE CURB INLETS

S:\DWG\DETAILS\609-4 GC-INLET.DWG

NOT TO SCALE
FIG. 609-4

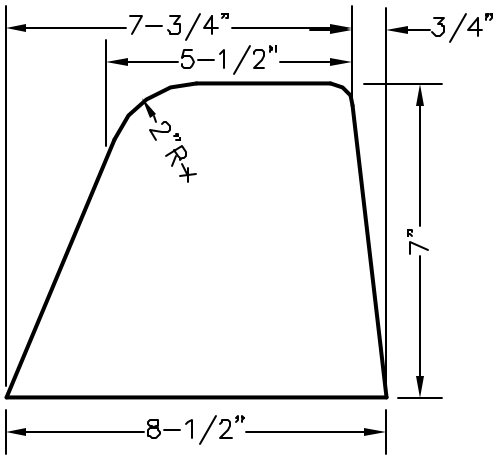

TYPE A

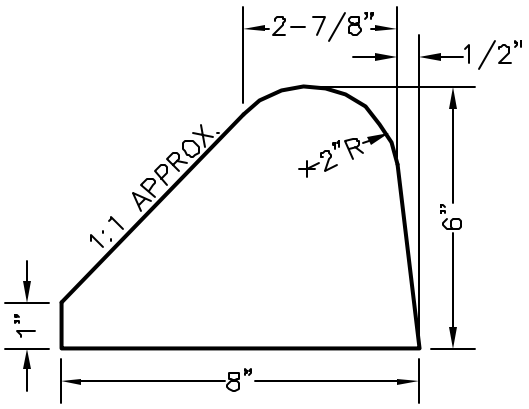

TYPE B

BITUMINOUS CONCRETE CURB

S:\DWG\DETAILS\609-5 BIT-CURB.DWG

NOT TO SCALE

FIG. 609-5

SECTION 610 -- DRIVEWAYS

Description

1.1 This work shall consist of constructing driveways of either bituminous concrete or Portland Cement Concrete, reinforced when specified.

Materials

2.1 Base course materials shall conform to 304.2.1.2.

2.2 Portland Cement Concrete shall be Class A conforming to 520.

2.2.1 Coarse aggregate shall be standard size #67.

2.3 Steel mesh shall be in accordance with the Concrete Reinforcing Steel Institute with a minimum spacing of 6x6- W2.9 x W2.9.

2.4 Joint filler shall conform to AASHTO M 153, Type III.

2.5 Bituminous concrete shall meet the material requirements of 401.

Construction Requirements

3.1 Bituminous Driveways

3.1.1 Subgrade and Base Course. The subgrade shall be carefully graded and compacted. The base course material shall be spread and rolled to a smooth surface and to the required cross-section.

3.1.2 General. The plant, mixing methods and hauling shall conform to the provisions of 401.

3.1.2.1 Binder Course. The compacted binder course shall be 1 inch less in thickness than the total thickness of the driveway.

3.1.2.2 Wearing Course. The compacted wearing course shall be 1 inch in thickness.

3.1.3 Placing. The bituminous concrete shall be spread uniformly in two courses as specified above. Each course shall be rolled with a roller weighing between 500 pounds and 2,000 pounds. The finished surface shall be uniform in appearance, free from irregularities and shall present a smooth surface. The edges shall be trimmed as directed to secure uniform lines.

3.1.4 Backfilling. The sides of the driveway shall immediately be backfilled as necessary with suitable material compacted and finished flush with the top of the driveway.

3.2 Concrete Driveways.

3.2.1 Excavation shall be made to the required depth and to a width that will permit the installation and bracing of forms. The foundation shall be shaped and compacted to a firm, even surface conforming to the section shown on the plans or as ordered. All soft and yielding material shall be removed and replaced with acceptable material.

3.2.2 Forms shall be of wood or metal and shall extend for the full depth of the concrete. All forms shall be straight, free from warp and of sufficient strength to resist the pressure of the concrete without springing. Bracing and staking of forms shall be such that the forms remain in both horizontal and vertical alignment until their removal.

3.2.3 The foundation shall be thoroughly moistened immediately prior to the placing of the concrete. The proportioning, mixing and placing of the concrete shall be in accordance with 520.3.

3.2.4 Steel mesh reinforcement when required, shall be placed as shown on the plans, using the methods described in 544.3.

3.2.5 The concrete driveways shall be placed in alternate slabs 30 feet in length except as otherwise ordered.

3.2.6 Finishing.

3.2.6.1 Concrete shall be finished by use of wood, carpet, canvas or cork floats by skilled concrete finishers leaving a fine-grained, non-skid texture.

3.2.7 Joints.

3.2.7.1 Expansion joints shall be of the dimensions specified and shall be filled with preformed expansion joint filler. The driveway shall be divided into sections, as directed, by dummy joints formed by a jointing tool or other acceptable means as directed. These dummy joints shall extend into the concrete for at least 1/3 of the depth and shall be approximately 1/8 inch wide.

3.2.7.2 Construction joints shall be formed around all appurtenances such as manholes and utility poles, extending into and through the driveways and any fixed structure such as a building foundation. This expansion joint material shall extend for the full depth of the driveway.

3.2.8 Concrete shall be cured for a minimum of 7 days. Curing compounds will not be permitted. Plastic sheets or other approved materials shall be placed in close contact with the finished concrete as soon as the concrete has set sufficiently to avoid damage from the placement of coverings. The protective covering shall be maintained vapor-proof in close contact with the concrete for the entire 7 day period. All traffic shall be excluded during the curing period. Vehicular traffic shall be excluded for such additional time as ordered.

Method of Measurement

4.1 Reinforced concrete driveways will be measured by the square yard of finished surface, computed to the nearest 0.1 of a square yard.

4.2 Base course material will be measured by the cubic yard based on the product of the area of driveway approved for payment and the depth shown on the plans or ordered.

Basis of Payment

5.1 The accepted quantities of concrete driveways will be paid at the contract unit price per square yard of the type and depth specified complete in place.

5.2 Hot bituminous pavement will be paid for under 403.

5.3 Base course material will be paid for under 304.

5.4 Necessary excavation will paid for under 203.

Pay Items and Units:

610.1	_ Inch Concrete Driveway	S.Y.
610.2	4 Inch Reinforced Concrete Driveway	S.Y.

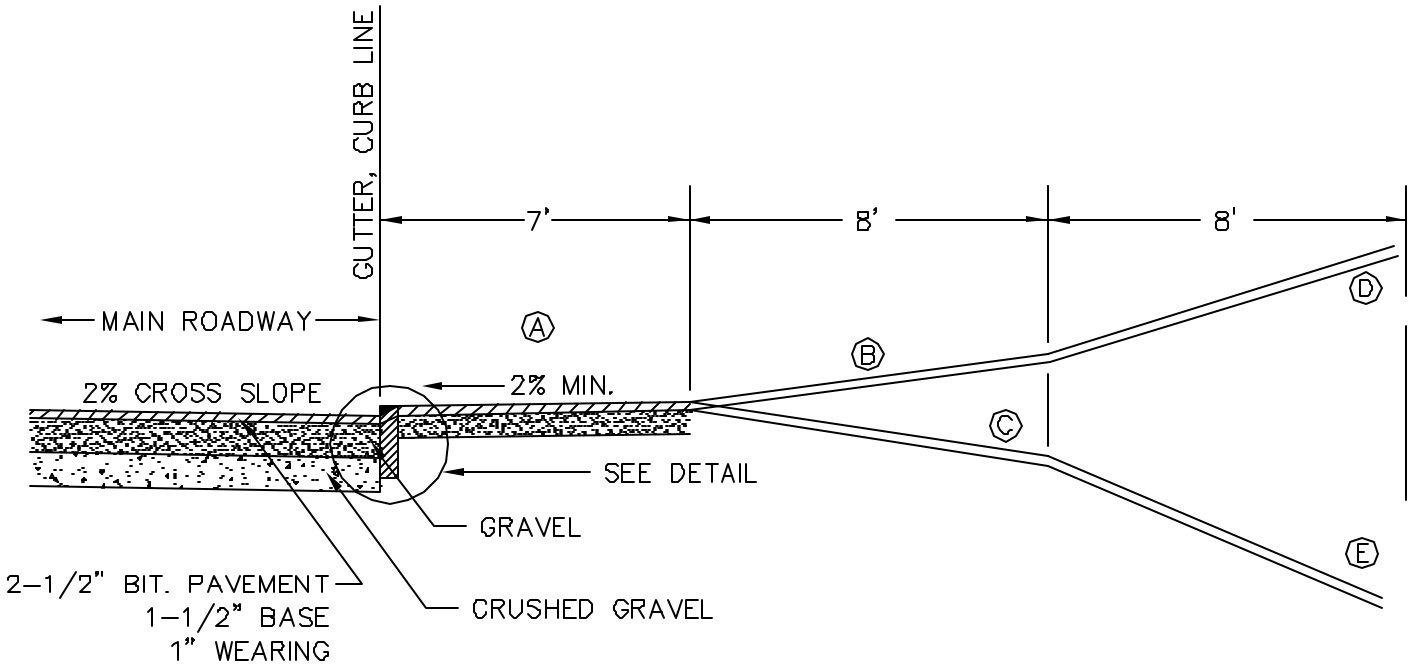

A	B	C	D	E
+2% MIN.	+12% MAX.	-8% MAX.	+15% MAX.	
+3%	+13% MAX.	-7% MAX.		
+4%	+14% MAX.	-6% MAX.		
+5%	+15% MAX.	-5% MAX.		-15% MAX.
+6%		-4% MAX.		-14% MAX.
+7%		-3% MAX.		-13% MAX.
+8% MAX.		-2% MAX.		-12% MAX.

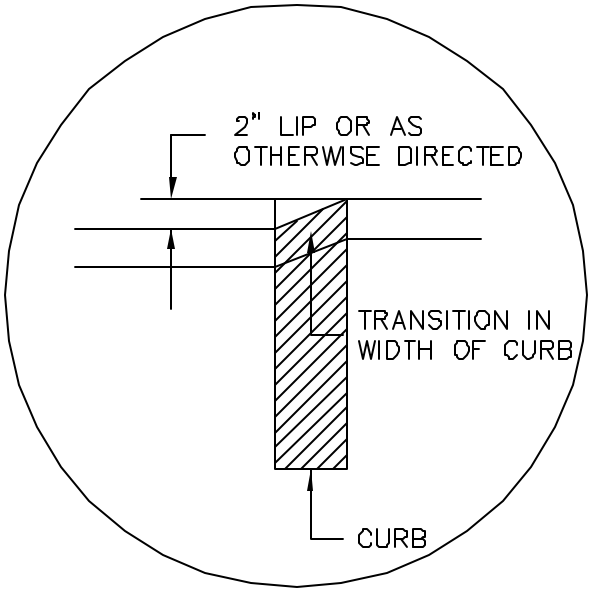

DETAIL

TYPICAL DRIVEWAY PROFILE

S:\DWG\DETAILS\610-1 DRVTYPPR.DWG

NOT TO SCALE

FIG. 610-1

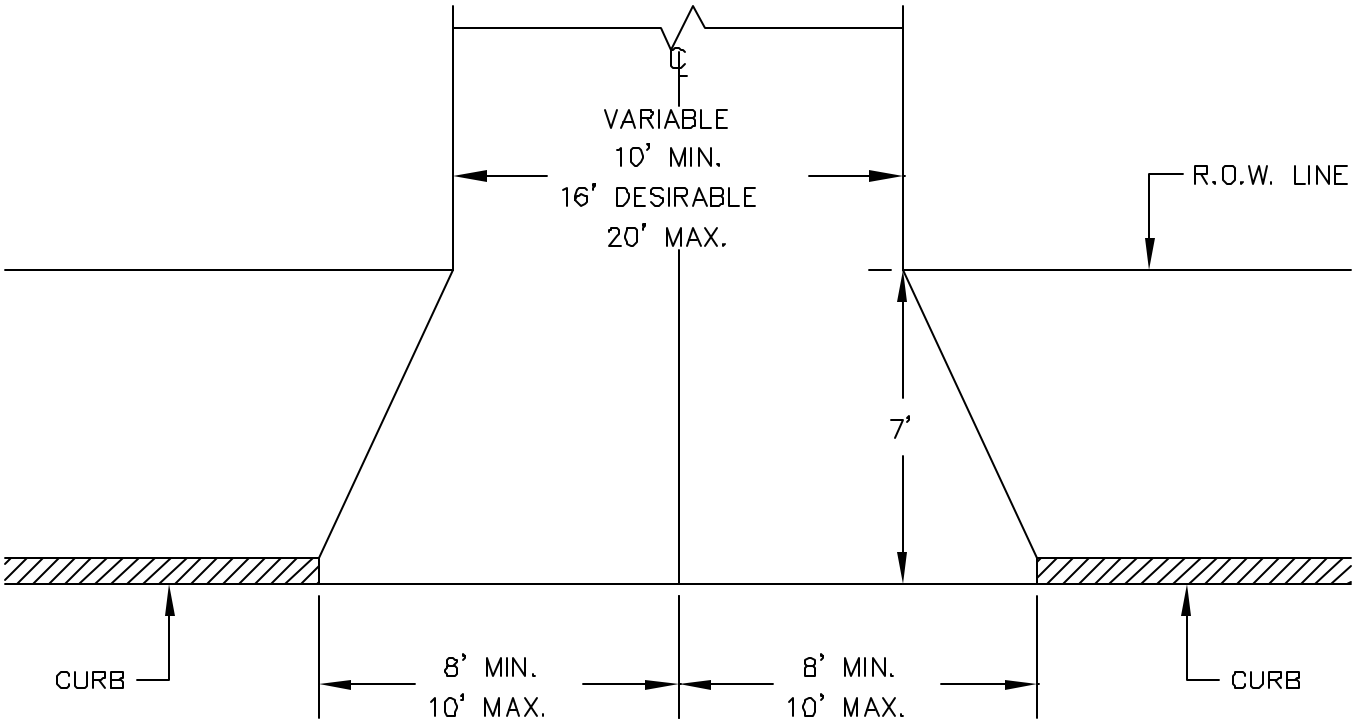

PLAN

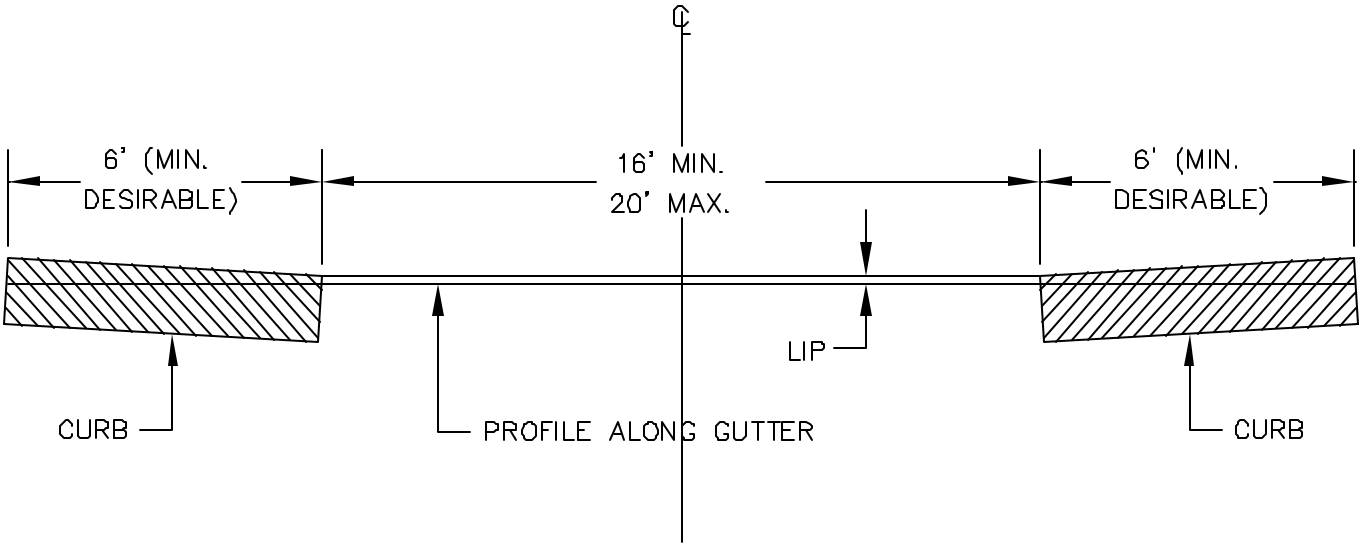

ELEVATION

RESIDENTIAL DRIVES

S:\DWG\DETAILS\610-2 RESDRIVE.DWG

NOT TO SCALE

FIG 610-2

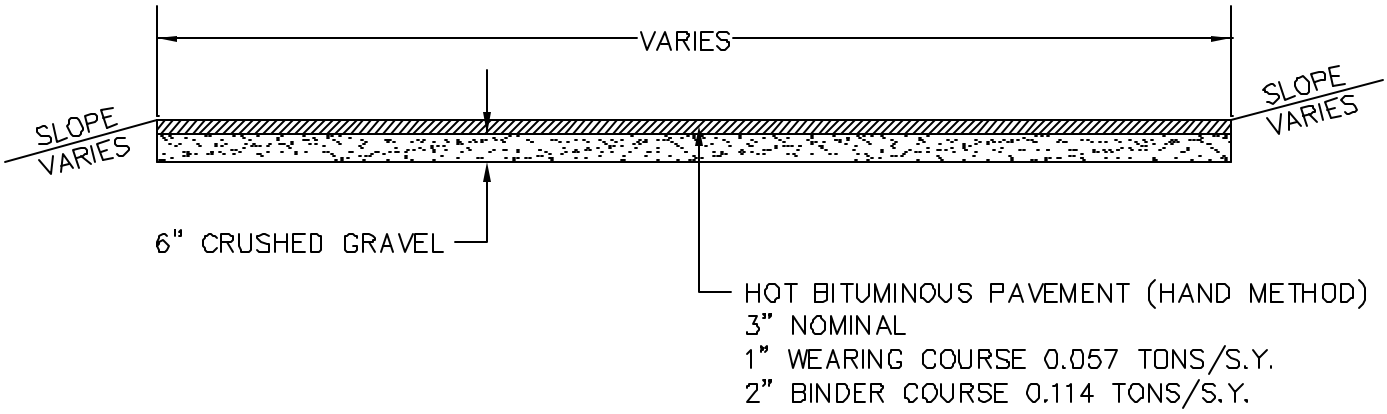

DETAIL–BITUMINOUS DRIVEWAY

S:\DWG\DETAILS\610-3,610-4 DRIVETYP.DWG

NOT TO SCALE
FIG. 610–3

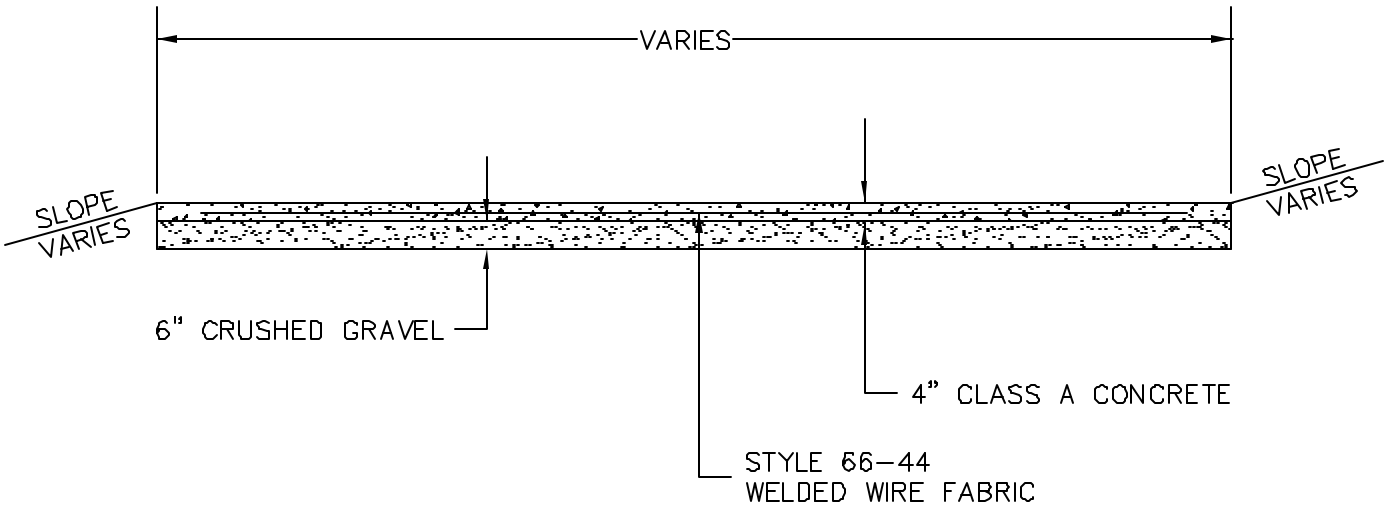

DETAIL–CONCRETE DRIVEWAY

S:\DWG\DETAILS\610-3,610-4 DRIVETYP.DWG

NOT TO SCALE
FIG. 610–4

SECTION 614 -- ELECTRICAL CONDUIT

Description

1.1 This work shall consist of furnishing, installing and testing conduit of the size and type specified, including sweeps, bends, joints, hangers, pull boxes, special fittings, plastic warning tape and other appurtenances, as shown on the plans or ordered. This work shall include the disposal of discarded materials and the restoration of disturbed surfaces when not otherwise included under other items in the contract.

Materials

2.1 Steel conduit shall conform to ASTM A 120 Standard Weight and shall be galvanized unless otherwise specified.

2.2 Electrical plastic tubing (EPT) and electrical plastic conduit (EPC) including fittings and joint requirements shall conform to NEMA TC 2 and shall be made from polyvinl-chloride (PVC) or polyethylene (PE) compounds. Conduit shall be marked in accordance with NEMA TC 2-6.1.

2.3 Concrete for cast in place conduit encasement shall conform to 520 Class B. Precast concrete encased conduit will not be permitted.

2.4 Plastic warning tape shall be American Public Works Association standard six (6") inch wide polyethylene color coded and marked in accordance with the utility industry standards for marking underground utility lines.

2.5 Concrete pull boxes, either precast or cast in place, shall be constructed using concrete conforming to 520, Class A. Frame and cover castings shall be gray iron conforming to AASHTO M 105. Unless otherwise specified, all gray iron castings shall be Class 30.

2.6 Molded pull boxes shall be either fiberglass-filled high density polyethylene, fiber reinforced polyester mortar, or fiberglass reinforced polymer concrete, all with high impact resistance and ultraviolet stabilization. The box shall be capable of withstanding 5,000 lbs. load exerted over a 10" x 10" area centered over any portion of the top edge of the closure sidewall with cover in place and shall also be distributed uniformly at the cover center over a 10" x 10" area with no breakage or permanent deformation. The box and cover shall be designed for incidental vehicular traffic. Cover shall be attached to box with penta-head bolts.

Construction Requirements

3.1 General.

3.1.1 Installation within the limits of the traveled way and shoulders, whether paved or unpaved, shall be constructed with Schedule 80 PVC conduit (EPC), rigid steel conduit, concrete encased Schedule 40 PVC (EPC) or concrete encased PE electrical tubing (EPT).

3.1.2 Installations beyond the limits of the traveled way and shoulders shall be constructed with Schedule 80 PVC conduit (EPC), Schedule 40 PVC conduit (EPC), rigid steel conduit or concrete encased PE electrical tubing (EPT). These materials may also be used under sidewalks and parking lots subject to incidental vehicular activity.

3.2 Bedding. All conduit to be laid in the ground shall be placed on a prepared bedding which shall provide a firm foundation. Where rock or unstable soil is encountered, the bottom of the proposed bedding surface shall have a 6 inch layer of Granular Backfill -- sand conforming to 209.2.1.3.1, compacted as directed.

3.3 Laying.

3.3.1 Conduit shall be laid to a pitch of not less than 3 inches per 100 feet.

3.3.2 All conduit lines located under pavement shall be installed in a straight line. Field bends required in other areas shall be made with an approved conduit bender. Not more than four 90 degree bends or equivalent (360 degree total) shall be used on a continuous conduit line. Bending radius shall not be less than 30 feet unless otherwise directed. Bends in conduit entering pull boxes, light pole bases, signal and meter pedestal bases, transformer pads, signal controller bases and at riser shall be made with manufactured electrical standard elbows.

3.3.3 All conduit connections shall be waterproof and conform to NEMA TC 2-3.4. When conduit of one material is to be joined to an existing conduit of another material, weatherproof adapters manufactured for the purpose shall be used. Waterproofing and sealing compounds containing bituminous material shall not be used.

3.3.4 When conduits are encased in concrete, concrete cover around ducts shall be a minimum of 3 inches with a minimum separation of 1-1/2 inches between ducts unless otherwise specified or ordered. After the initial set, the concrete shall be protected from the air and sun. Fill shall not be placed over the conduit until authorized by the Engineer.

3.3.5 Conduit risers installed on poles or other structures shall extend a minimum of 10 feet above the elbow and be of a type and total height to meet utility company requirements. Conduits shall be attached with an approved support strap. A suitable plug shall be installed in the end of the conduit riser.

3.3.6 When ordered, conduit shall be placed under existing pavement by approved jacking or drilling methods which do not disturb the pavement. Pavement shall not be disturbed without the written permission of the Engineer. Jacking and drilling pits shall be kept 2 feet clear of the edge of pavement.

3.3.7 When so directed, and whenever a continuous traffic signal conduit line is greater than 90 feet, additional pull boxes shall be installed. Cable splices shall not be made in these boxes without permission.

3.3.8 A minimum of 3 feet of space shall be left between the ends of conduit runs where there may be a future junction. When conduit is installed which does not terminate in a pull box, equipment base or similar type foundation, a witness marker consisting of a No. 5 re-bar of sufficient length to allow for the top of the marker to be set flush with the final grade shall be placed vertically at each end of such buried conduit.

3.3.9 Unless otherwise directed, a No. 14 galvanized steel pull wire or plastic/nylon rope having a minimum tensile strength of 200 lbs., shall be placed in all conduit runs. At least 24 inches of wire or rope shall be left coiled at each end of the conduit.

3.4 Backfilling.

3.4.1 All backfill material adjacent to conduit shall be approved material. Backfill material shall be free from hard lumps or clods larger than 3 inches in diameter and free from rocks and stumps. Backfill within the pavement structure shall be of the same type material and match the depths encountered.

3.4.2 When conduit is installed beyond traveled ways and shoulders, and outside of areas such as sidewalks and parking lots, the backfill shall be placed to 6 inches above the conduit and compacted by pneumatic tampers, vibratory compactors, or other approved means. The remainder of the backfill material shall then be placed and compacted by an approved method.

3.4.3 When conduit is installed within traveled ways, shoulders, sidewalks and parking areas, the backfill shall be
placed to 6 inches above the conduit or encasement and compacted by pneumatic tampers, vibratory compactors, or other approved means. Additional backfill shall be placed in layers not greater than 6 inches. All backfill shall be compacted to not less than 95 percent of AASHTO T 99.

3.4.4 Bituminous or Portland Cement concrete pavement removed to excavate the trench shall be replaced with hot bituminous pavement conforming to the requirements of 401 unless otherwise directed. Pavement shall be placed in thoroughly compacted layers of not more than 2 inches to give a total thickness equal to that of the existing pavement.

3.4.5 Conduits provided for future use shall have suitable plugs installed at each end. Conduit ends shall not be backfilled until reference measurements are made by the Engineer.

3.4.6 A plastic warning tape shall be installed over all conduits at approximately 12 inches below final grade.

3.5 Testing.

3.5.1 After the trench has been backfilled, excluding pavement if applicable, the Contractor, in the presence of the Engineer shall test the installation by pushing through the entire length of the conduit line a device with a diameter not smaller than 1/4 of an inch less than the inside diameter of the conduit. All obstructions, including stones, dirt and the like, shall be removed. Broken or other unsatisfactory conduits shall be replaced at no expense to the Department.

3.5.2 When ordered, existing conduit to be incorporated into a new system shall be cleaned with a mandrel and blown out with compressed air.

3.6 Pull Boxes.

3.6.1 Concrete or molded pull boxes shall be constructed and installed as shown on the plans.

3.6.2 All pull boxes shall be placed on a minimum of 6 inches of granular material extending at least 4 inches beyond the outside of the pull box.

3.6.3 Pull box covers shall indicate the type of service enclosed.

3.6.4 An approved 2 inch galvanized "J" hook shall be installed as directed in pull boxes designated to be used for traffic signal circuits.

Method of Measurement

4.1 Conduit will be measured by the linear foot of the specified type, size and number of ducts of the size required, to the nearest 0.1 of a foot.

4.1.1 When a conduit is connected to a foundation for a signal pole, control cabinet pole or light pole, measurement will be made only to 3 feet from the center of the base, measured horizontally. The limit of measurement where conduit is joined to previously existing conduit will be at the junction of the two conduits.

4.2 Pull boxes will be measured by each, but will not be deducted from the length of the conduit.

Basis of Payment

5.1 The accepted quantities of conduit will be paid for at the contract unit price per linear foot of the type, size and number of ducts specified complete in place, with the following exceptions:

5.1.1 All rock structure excavation, and any excavation of unsuitable material required below the conduit will be paid for under 206.

5.1.2 New material ordered for use as backfill below the subgrade will be paid for under 304.

5.1.3 Hot bituminous pavement required in 3.4.4 will be paid under 403. If the item of 403 is not included in the contract, this work will be paid as provided in 109.04.

5.2 Pull boxes of the type specified will be paid for at the contract unit price per each.

5.2.1 No extra payment will be made for material specified in 3.6.2.

Pay items and units:

614.121	2" Conduit, Concrete Encased, Incl. Specified Excavation	L.F.
614.131	3" Conduit, Concrete Encased Incl. Specified Excavation	L.F.
614.132	3" 2-Duct Conduit, Concrete Encased, Incl. Specified Exc.	L.F.
614.133	3" 3-Duct Conduit, Concrete Encased, Incl. Specified Exc.	L.F.
614.141	4" Conduit, Concrete Encased Incl. Specified Excavation	L.F.
614.142	4" 2-Duct Conduit, Concrete Encased Incl. Specified Excavation	L.F.
614.3121	1-1/4" Steel Conduit Including Specified Excavation	L.F.
614.321	2" Steel Conduit Including Specified Excavation	L.F.
614.331	3" Steel Conduit Including Specified Excavation	L.F.
614.3311	3" Steel Conduit, Jacked or Drilled, Including Specified Excavation	L.F.
614.341	4" Steel Conduit Including Specified Excavation	L.F.
614.3411	4" Steel Conduit, Jacked or Drilled, Including Specified Excavation	L.F.
614.511	Concrete Pull Box -- 14"	Each
614.512	Concrete Pull Box -- 18"	Each
614.522	Molded Pull Box – 13" x 24"	Each
614.523	Molded Pull Box – 17" x 30"	Each
614.7214	2" PVC Plastic Conduit, Schedule 40, Incl. Specified Excavation	L.F.
614.7218	2" PVC Plastic Conduit, Schedule 80, Incl. Specified Excavation	L.F.
614.7224	2" 2-Duct PVC Plastic Conduit, Schedule 40, Incl. Specified Excavation	L.F.
614.7228	2" 2-Duct PVC Plastic Conduit, Schedule 80, Incl. Specified Excavation	L.F.
614.7314	3" PVC Plastic Conduit, Schedule 40, Incl. Specified Excavation	L.F.
614.7318	3" PVC Plastic Conduit, Schedule 80, Incl. Specified Excavation	L.F.
614.7324	3" 2-Duct PVC Plastic Conduit, Schedule 40, Incl. Specified Excavation	L.F.
614.7328	3" 2-Duct PVC Plastic Conduit, Schedule 80, Incl. Specified Excavation	L.F.
614.7414	4" PVC Plastic Conduit, Schedule 40, Incl. Specified Excavation	L.F.
614.7418	4" PVC Plastic Conduit, Schedule 80, Incl. Specified Excavation	L.F.

614.7514	5" PVC Plastic Conduit, Schedule 40, Incl. Specified Excavation	L.F.
614.7518	5" PVC Plastic Conduit, schedule 80, Incl. Specified Excavation	L.F.

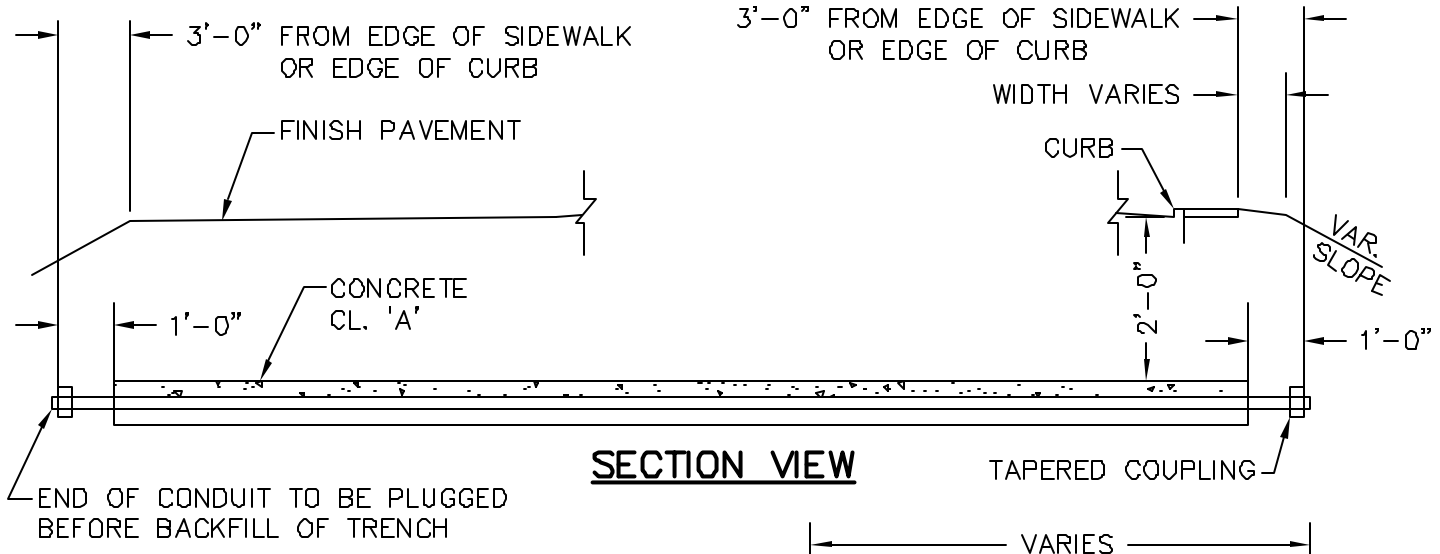

SECTION VIEW

NOTE:

PRECAST CONDUIT TYPE III MAY BE USED IN PLACE OF TYPE I.
TYPE III EXTENDS THE ENTIRE DISTANCE FROM 'A' TO 'B'.

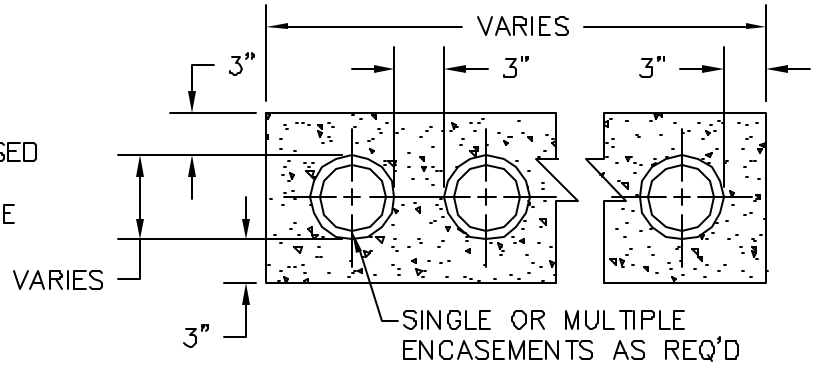

CONDUIT TYPE I

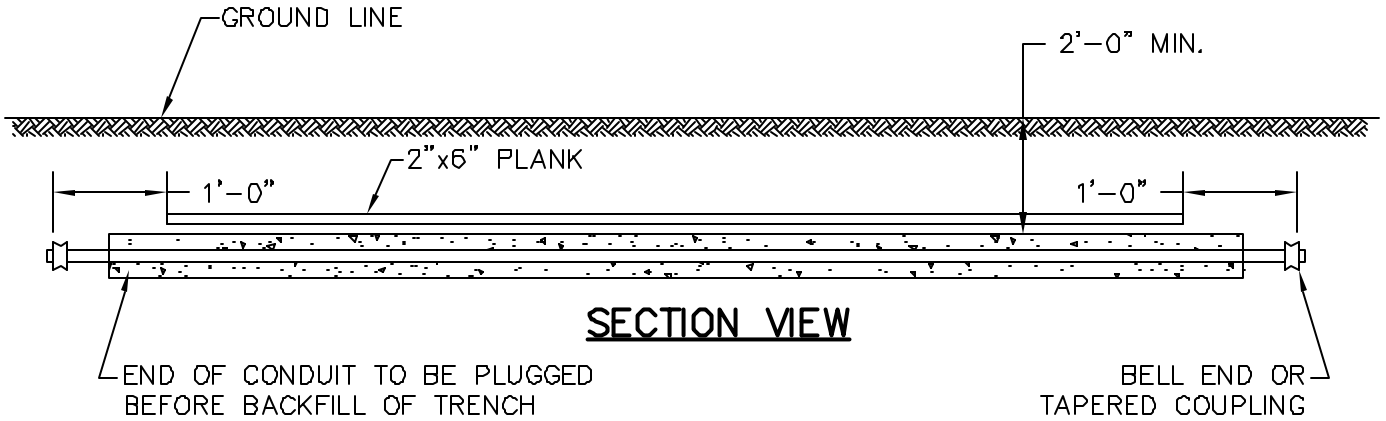

SECTION VIEW

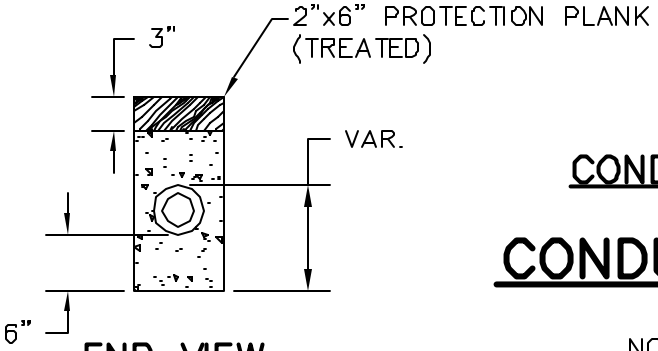

END VIEW

CONDUIT TYPE II

CONDUIT DETAILS

S:\DWG\DETAILS\614-1 CONDUIT.DWG

NOT TO SCALE

FIG. 614-1

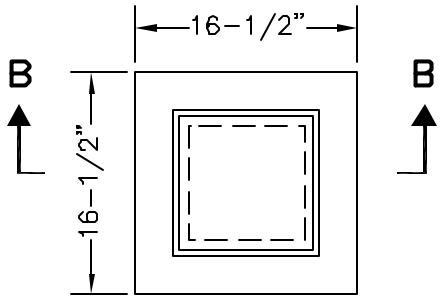

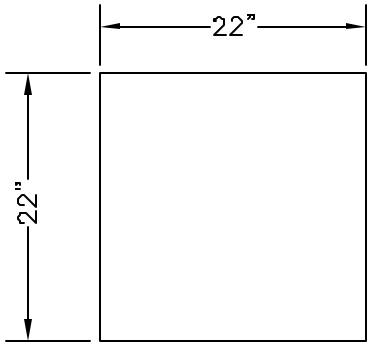

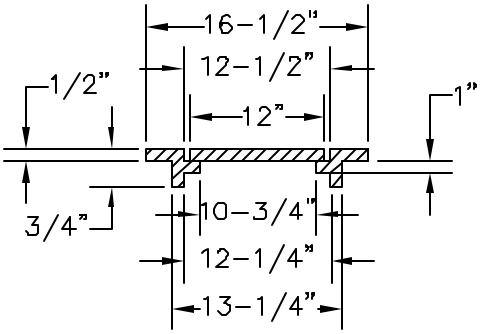

SECTION B–B

CAST IRON FRAME & COVER

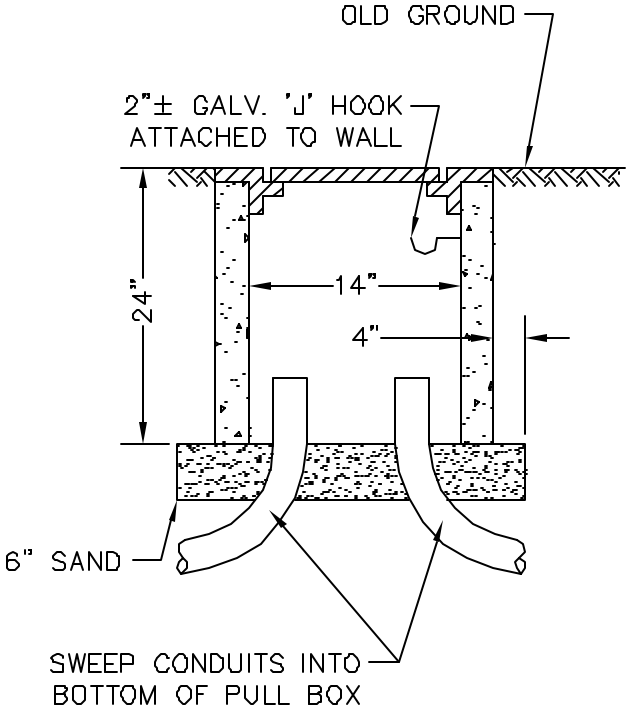

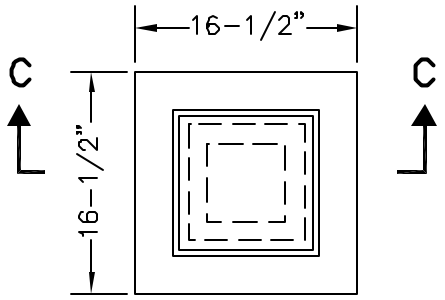

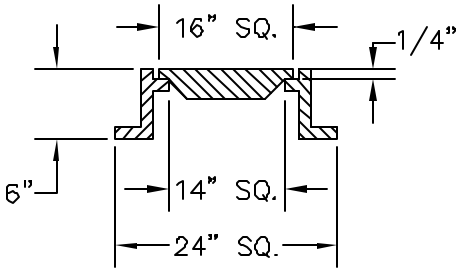

SECTION C–C

NOTES:

HEAVY DUTY REQUIRES 5" WALL THICKNESS.

CONCRETE SHALL BE CLASS 'A'.

6" SAND BED FOR DRAINAGE, TAMPED.

GROUNDING BUSHING SHALL BE INSTALLED AT ALL ENDS OF STEEL CONDUIT.

HEAVY DUTY CAST IRON FRAME & COVER

(APPROX. WEIGHT = 250 LB.)

PULL BOX, FRAME & COVER

S:\DWG\DETAILS\614-2 TRFCCF.DWG

NOT TO SCALE

FIG. 614-2

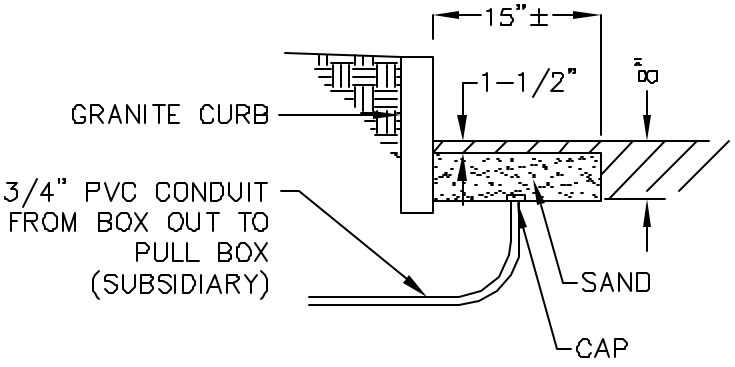

SECTION A–A

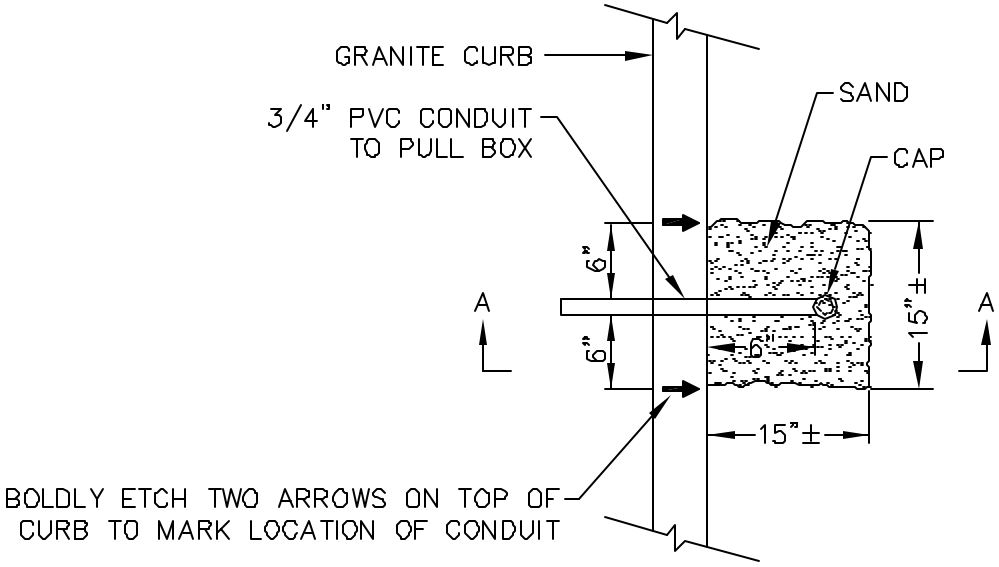

PLAN

DETECTOR BOX OUT DETAIL
STAGE 1: AT PAVING

S:\DWG\614a DETAILS\SIGNAL DETECTOR BOX.DWG

NOT TO SCALE

FIG. 614–3a

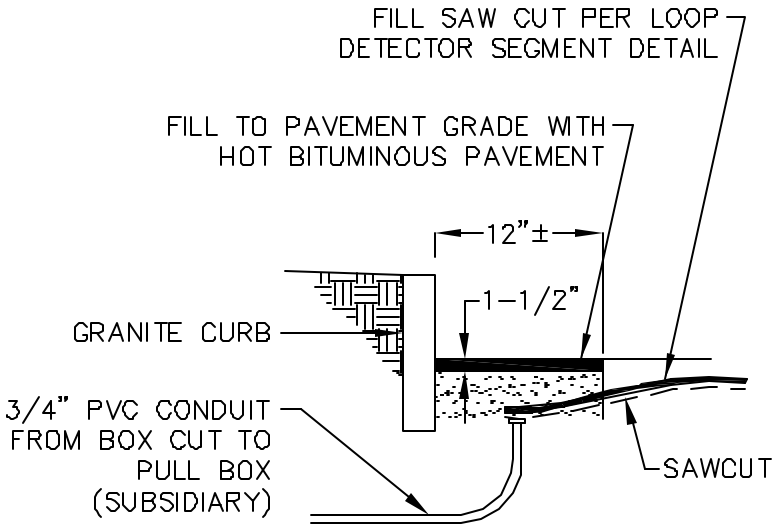

SECTION A-A

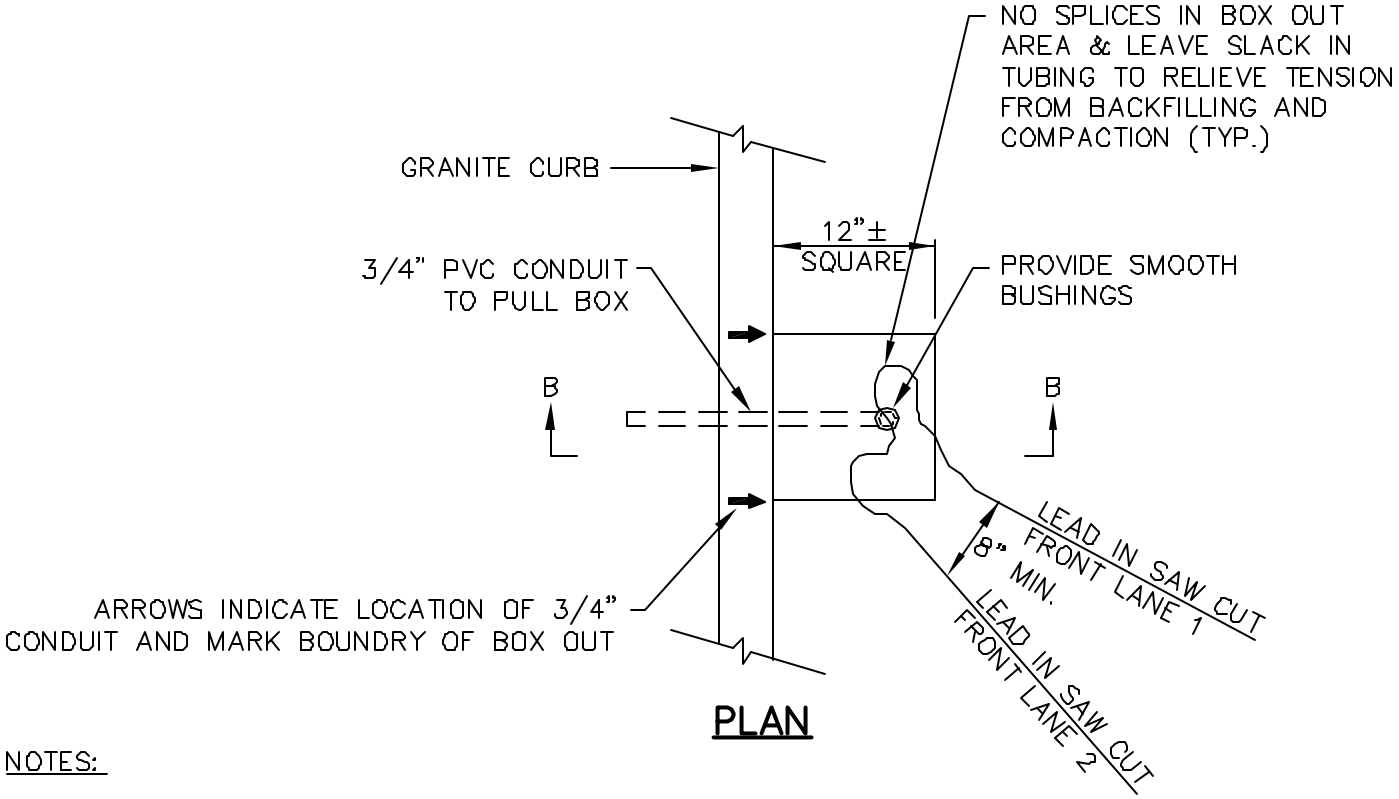

PLAN

NOTES:

1. MAXIMUM OF TWO LEAD IN PAIRS PER 3/4" PVC CONDUIT.
2. TAPE TUBING 3" ON EACH SIDE OF THE SAW CUT BOX OUT BOUNDRY WITH ELECTRIC TAPE.
3. AFTER TUBING IS INSTALLED FILL CONDUIT WITH CRUMPLED PAPER AND SEAL WITH PLIABLE DUCT SEALANT.
4. USE CONSTRUCTION SAND TO COVER AND SUPPORT THE VINYL PLASTIC TUBING.

DETECTOR BOX OUT DETAIL
STAGE 2: AT LOOP INSTALLATION

S:\DWG\DETAILS\614-3b SIGNAL DETECTOR BOX.DWG

NOT TO SCALE

FIG. 614-3b

SECTION 616 -- TRAFFIC SIGNALS

Description

1.1 This work shall consist of furnishing and installing traffic signals, pedestrian signals, or flashing beacons including poles, mast arms, foundations, and all necessary fittings, cables, and components ordered.

1.2 Traffic signal terms shall be in accordance with those defined in the MUTCD.

Materials

2.1 A list of the recommended materials required to install the system may be included as an amendment to this specification, but the Department will give no guarantee as to the completeness of this list.

2.1.1 Electrical materials shall meet the standards herein, local and utility codes, and the National Electrical Code, where applicable.

2.1.2 Drawings, manufacturer's specifications, and applicable catalog cuts for all materials and components shall be submitted in accordance with 105.02. An additional set of final approved documents, to total 6 sets, shall be supplied to the Engineer.

2.2 Traffic Signal Heads.

2.2.1 Housings. Housings shall be constructed of die cast aluminum or polycarbonate with a smooth outer surface and shall be capable of holding the optical units securely in place. Housings shall be adaptable for pedestal, bracket, or rigid mast-arm vertical or horizontal mounting. The assembled housing shall be dust proof and moisture proof. Each housing shall be equipped with a hinged door of die cast aluminum or polycarbonate to hold the lens and parts of the optical units. The doors shall be designed to insure uniform pressure around the door frame when closed. Doors shall be fastened by hinged wing nut assemblies or other approved fasteners. Unless otherwise indicated on the plans, lenses shall be furnished with approved sun shield visors, not less than 10 inches in length. If either longer visors than those specified above or louvres are deemed necessary, they shall be furnished and installed.

2.2.1.1 The assembled housings shall be made up of individual sections fastened together with bolts. The assembly of sectional units shall present a smooth unbroken contour of pleasing appearance. Each end of the housing assembly shall have an opening for a 1-1/2 inch pipe nipple. The area around this opening shall be reinforced and serrated
so that lock nuts will seat firmly.

2.2.1.2 One cap shall be supplied with each assembled housing to act as a cover over the hole in the top to prevent water from entering.

2.2.2 Housing adaptors. Housing adaptors for pedestal mounting shall be constructed of metal. They shall be adjustable with serrated surfaces to permit the housing to be locked in the desired horizontal position. The adaptors shall be secured to the bottom of the housing by means of a close nipple, shall slip-fit at least 7 inches over a standard traffic signal post 4 inches in diameter, and shall be secured to the post by means of set screws. Adaptors shall contain raceways from the housing to the post to protect the wires from the elements.

2.2.3 Mast arm brackets. Mast arm brackets shall be as indicated in the recommended list of materials shown in the proposal.

2.2.4 Receptacles. The lamp receptacle shall be of heat resisting material designed to hold an A-21 bulb or 60 to 150 watt traffic signal lamp with the light center at the focal point of the reflector. This receptacle shall be provided with a lamp grip to prevent the lamp working loose due to vibration. Provision shall be made on either the lamp receptacle or reflector holder to permit the proper focusing of lamps, with a secure fastening provided to retain the desired focus.

2.2.4.1 Each receptacle shall be wired with two leads which shall terminate in a junction block in each signal head. Separate leads shall be used to wire the block to the base. Leads shall be 18 AWG stranded wire. All colors shall be bright and clearly defined and cover the insulation the entire length of the lead. The color of these leads shall be as follows:

(a) From the receptacle behind the red lens: one red wire and one white wire with a red tracer;
(b) From the receptacle behind the yellow lens: one yellow wire and one white wire with yellow tracer;
(c) From the receptacle behind the green lens: one green wire and one white wire with a green tracer;
(d) From the receptacle behind the green arrow: one blue wire and one white wire with a blue tracer.

2.2.5 Optics. Optical units shall consist of certified 10,000 hour lamps, receptacles, reflectors, lenses, and other necessary equipment which shall give clearly visible signal indications within an angle of at least 45 degrees and at a distance from 10 feet to 300 feet under all normal light and atmospheric conditions. The units shall be designed to minimize the effect of all phantom light. The units shall be readily accessible for maintenance.

2.2.5.1 Reflectors shall reflect parallel light rays from a properly focused traffic lamp. Reflectors shall be constructed of one-piece polished alzak aluminum.

2.2.5.2 Lenses shall conform to the standards set forth by the Institute of Transportation Engineers and shall be of the color indicated, circular in shape, with a visible diameter of approximately 12 inches, or approximately 8 inches, if so specified.

Each lens shall be true to color, of best quality plastic, free from imperfections, of high luminous transmission, conforming to the standards of ANSI D 10.1. Lens configuration shall be as specified in the MUTCD,

2.3 Pedestrian Signal Heads.

2.3.1 General. Pedestrian signal heads shall be of the incandescent type conforming to the Institute of Transportation Engineers Standard for Adjustable Face Pedestrian Signal Heads. All heads shall be rectangular in shape and shall consist of the lettered messages WALK and DON'T WALK. Both messages shall be contained in a single section head. The light source shall be designed so that in case of an electrical or mechanical failure or the word DON'T, the word WALK of the DON'T WALK message shall also remain dark.

2.3.2 Housings. Housings shall be one piece die cast aluminum alloy complete with top, bottom, sides, and back. For mounting purposes, the top and bottom of the housing shall have openings to accommodate standard 1-1/2 inch pipe brackets. The outside surface of the openings shall be serrated to provide for positive positioning of the housing. Doors and fasteners shall be as specified in 2.2.1. The completed assembly shall be dust and moisture proof.

2.3.3 Lamps and receptacles. The pedestrian signal head shall be furnished complete with A-21 traffic signal lamps and compatible receptacles. Receptacles shall be of molded bakelite, molded phenolic, or ceramic and shall have a brass screw shell and adjustable lamp grip to allow positioning of the lamp. Receptacles shall be centered and pre-focused.

2.3.3.1 Each lamp receptacle shall be provided with one colored 18 AWG lead from the receptacle and one white 18 AWG lead from the screw shell to a terminal block mounted within the housing.

2.3.4 Lenses. The inside face of each lens within the message section area shall be painted with an approved transparent color to produce a Portland orange DON'T WALK message and a lunar white WALK message when illuminated by
the lamp. All areas surrounding the letters shall be opaque black. The letters shall be at least 4-1/2 inches in height with a stroke width of 5/8 inch. When not illuminated, neither message shall be readily distinguishable.

2.4 Traffic Signal Poles, Mast Arms and Pedestals.

2.4.1 General. Traffic signal structures shall be designed in accordance with the current AASHTO Standard Specifications for Structural Supports for Highway Signs, Luminaires and Traffic Signals for 80 mph wind zone to support fixed signals, signs, fire pre-emption equipment, and luminaires as shown on the plans.

2.4.1.1 Steel structures, unless otherwise indicated, shall be hot dip galvanized in accordance with ASTM A123.

2.4.1.2 Concrete foundation shall be concrete Class B meeting the requirements of 520. Reinforcing steel shall meet the requirements of 544. The foundation shall be as shown on the plans.

2.4.1.3 Anchor bolts shall conform to ASTM A36 M55 having minimum yield strength of 55,000 psi with threaded end and hex nuts (2 per bolt), galvanized in accordance with ASTM A153.

2.5 Traffic Signal Controllers and Cabinets.

2.5.1 General. The controller shall operate on 120 volt, 60 cycle alternating current, and shall be delivered completely wired and enclosed in a weatherproof cabinet. All components shall be new, and unless noted, the use of solid state components shall be required. Controllers shall be modular by phase, with dual maximum timing and exclusive pedestrian timing capability in phase one. Timing shall be set by thumbwheel, unless otherwise directed. All controllers and cabinets finished shall comply with the National Electrical Manufacturers Association (NEMA) current standard.

2.5.1.1 All 8 phase controllers shall be wired to flash yellow in phase 2 and phase 6, and red in all other phases. Following an interruption of power all eight phase controllers shall start in a flashing mode of operation and will begin automatic operations at the beginning of the green period for phase 2 and phase 6.

2.5.1.2 Bench test. All components of the controller and cabinet shall be bench tested for a minimum of 48 continuous hours by the Contractor, prior to delivery to the project. Testing shall be accomplished by the use of a test board utilizing the phasing shown on the plans. Testing will be checked by the Engineer. The Contractor shall notify the Engineer at least 3 days prior to testing. Any defective components shall be replaced and subsequent testing shall be performed to the satisfaction of the Engineer. Upon completion of satisfactory bench testing, a written approval will be supplied to the Contractor by the Engineer. This approval authorizes delivery to the project only and does not relieve the Contractor from ensuring proper operation of the equipment. The approval shall accompany the cabinet and controller when delivered to the project.

2.5.2 Controller cabinet. All timing and flashing mechanisms shall be enclosed within a dust and moisture proof sheet aluminum base mounted housing provided with 2 shelves, a main door, and a switch compartment door. Painting shall be in accordance with 3.12.

2.5.2.1 All cabinet components shall be factory wired to include police panel control button, signals on/off switch, manual/automatic switch; plastic print holder with 3 sets of manuals and prints; thermostatically controlled (on at 60 degrees F and above) ventilation fan, thermostatically controlled (on at 30 degrees F and below) heat lamp of 100 to 150 watts; line filter, G.F.I wired duplex convenience outlet with light receptacle, controller on/off switch, circuit breaker disconnect, lightning/surge arrestors, loop

detector transient protectors, cube-type load switches with LED on the input side, cube-type NEMA flasher; pedestrian and vehicle test push button, one time switch (Electrotechnics Corp. Model TC/12-104, or approved equal), one circuit wired for maximum two, one circuit wired for Uniform Code Flash.

2.5.2.2 Connecting cables from the back panel to the controller shall be long enough to reach any NEMA timer on the top shelf. The back panel shall have all load switches, flash transfer relays, and ancillary relays completely wired for present or future use. All cabinet components including amplifiers, relays, ancillary equipment, and loop and pedestrian terminals shall be identified by label and/or tagged as to their use.

2.5.3 Lock. The lock for the main door of the cabinet shall be a tumbler type lock as recommended by the manufacturer of the signal equipment. A police-type lock shall be provided in the auxiliary door. Two keys shall be furnished for each lock.

2.5.4 Contacts. All contacts used in connection with interval indications shall be of pure coin silver or equivalent, and shall be capable of breaking and carrying 10 amperes at 125 volts alternating current. The contacts shall be readily accessible and capable of being replaced in the timer without the use of any tools other than pliers and screw drivers.

2.5.5 Flashers. Intersection beacon flashers shall be housed in an approved cabinet containing: 25 ampere NEMA cube-type flasher, 10 ampere circuit breaker, and disconnect switch. All components shall be completely wired and mounted within the cabinet. Painting shall be in accordance with 3.12.

2.5.6 Pedestals. Meter pedestal shall be as indicated on the plans.

2.5.7 Radio and television interference. Electrical equipment shall be prevented from interfering with radio and television reception.

2.6 Cable and Wire.

2.6.1 General. Cable shall be plastic covered cable meeting the applicable requirements of the International Municipal Signal Association (IMSA) specifications. The conductor color coding shall not be by means of printed code. Actual color coding shall be used.

2.6.2 The minimum size wire for the circuits shall be as follows:

Service	A.W.G. #
(a) To Controller	8 stranded
(b) Controller to Pole or Pedestal	12 stranded
(c) Pole or Pedestal to Receptacles	14 stranded
(d) Controller to Push Buttons	14 stranded

(e) Detector Loop Leads	16 IMSA Spec. 50-2
(f) Detector Loop Wire	14 IMSA Spec. 51-5
(g) Equipment Grounding Conductor	8 stranded

2.7 Conduit. Traffic signal conduit, pull boxes, frames, and covers shall conform to 614.2.

2.7.1 Conduit for all lines, except the service, shall be 3 inches in diameter. Service conduit shall be rigid steel conduit 1-1/4 inches inside diameter.

2.8 Painting. Prior to erection and assembly, if not manufactured of polycarbonate material, the entire traffic or pedestrian signal housing and visors shall be painted with zinc-chromate primer 708-NH 1.50 and a finish enamel coat of federal yellow 708-NH 3.72. The doorface and inside visor shall be black 708-NH 3.75.

2.9 Backfill for foundations, unless otherwise ordered, shall be Granular Backfill conforming to the requirements of 209.

Construction Requirements

3.1 All electrical installations shall comply with the requirements specified herein, local and utility codes, and the National Electrical Code (NEC).

3.2 Each signal head mounted on a mast arm shall be installed with 1/8 inch diameter aircraft cable, looped around the mast arm and mast arm bracket, as a safety device to prevent the signal head from falling. Cable ends shall be fastened by two opposing "U" clamps. When suspended by this cable, the top of the signal head shall be no more than 6 inches below the bottom of the mast arm.

3.3 Conduit lines. All conduit lines necessary shall be constructed for the proper operation of the signals and shall conform to 614.3

3.3.1 All conduits terminating in the cabinet shall be sealed with duct sealants.

3.4 Concrete foundations with anchor bolts to secure the traffic signal structures, flasher or controller cabinets, and meter pedestals, shall be installed at the locations specified. When directed, the concrete foundation for the controller cabinet shall be raised to any height up to 18 inches above the surface.

3.4.1 The void created by the leveling nuts between the foundation and the base plate of the structure shall be filled with an approved non-shrink grout.

3.4.2 Prior to placing the controller cabinet on its foundation, silicone sealant shall be applied to the area of contact.

3.5 Inductive Loop Detectors.

3.5.1 Loop Installation.

3.5.1.1 Curb entry. Nonmetallic conduit shall be utilized from the pull box to its intercept with the saw cut. The visible portion of the curbing shall not be cut for conduit installation. The chase from the saw cut to the splice box should extend no more than one foot from the curb. Conduit shall be installed so that it directly receives the lead-in wire.

3.5.1.2 Saw cut. The saw cut shall be a clean, well defined 5/16 inch wide saw cut without damage to adjacent area. The saw cut depth shall be at least 1-3/4 inches for asphalt and 1-1/4 inches for concrete. The saw cuts shall be overlapped to provide full depth at all corners, and all
slots requiring a right angle turn of wire shall be cut at a 45 degree diagonal angle. Prior to the installation of wire, the saw cuts shall be checked for the presence of ragged edges or protrusions, and cleaned and dried. Cutting dust, grit, oil, moisture, or other contaminants shall be removed.

3.5.1.3 Loop wire installation. All loop installations shall be made without damage to the wire or its insulation. All damaged wire shall be replaced. The loops shall be installed as per plans, and shall contain the required number of turns as shown or as recommended by the manufacturer.

3.5.1.3.1 The wire shall be laid in the slot so that there are no kinks or curls and no straining or stretching of the insulation. Loop wire shall be installed as far down in the slot as possible, using a blunt object similar to a wooden paint stirrer, to seat the loop wire, but in no case shall a screwdriver or other sharp tool be used for this purpose. The loop lead-in wires shall be twisted to provide a minimum of one turn per foot from the loop to the pull box.

3.5.1.3.2 A minimum of 3 feet of slack shall be coiled and left in the pull box. Where the loop wire crosses cracks or joints in the pavement, plastic sleeving shall be used to insulate the wire, to a minimum of 4 inches on either side of the crack or joint.

3.5.1.4 Initial testing. Prior to the sealant, the loop and the lead-in shall be checked for continuity and resistance. In addition, the integrity of the insulation shall be checked by applying a megohm meter between each end of the loop lead-in and the nearest reliable electrical ground. In the event that no available ground exists, a suitable ground shall be established for the measurement. The megohm meter reading shall be in excess of 10 megohms under all conditions. The Contractor, with the Engineer in attendance, shall test and record the meter reading at each location for satisfactory compliance.

3.5.1.5 Sealant. Saw cut sealant shall be an approved flexible embedding sealant used strictly in accordance with the manufacturer's instructions. The sealant shall be poured into the slot to half depth, checked for air bubbles or material pile up, then filled to the roadway level. Excess sealant shall be removed by means of a squeegee, and

in any case, be neither a trough nor a mound formed. Sufficient time shall be allowed for the sealant to harden in accordance with manufacturer's instructions before allowing traffic access to the area.

3.5.1.6 Final testing. Repeat the test procedure specified in 3.5.1.4.

3.5.1.7 Detector feeder cable installation. The feeder cable and the loop lead-in wire shall be terminated in the pullbox and all connections shall be spliced, soldered, compounded and taped. The entire splice shall be encapsulated in a waterproof splice kit approved by the Engineer.

3.5.1.8 Record keeping. A record of any modifications to the original installation shall be made by the Contractor. The Contractor shall furnish the Engineer with 3 copies of the initial and final test results.

3.6 Service and Meter Box

3.6.1 When required, the Contractor shall furnish and install a service riser on the pole selected by the power company in conformity with the plans, and shall also furnish the power company its choice of equipment above the switch or breaker. Wire sizes shall be as specified by either the plans or the power company. In case of discrepancy the large size shall be used.

3.6.2 A NEMA weather proof disconnect switch and cabinet shall be furnished and installed at the location specified. The circuit breakers in this switch shall be 30 amperes.

3.6.3 The Contractor shall make all arrangements for the service connection and be responsible for all charges incurred thereby.

3.6.4 Under no conditions shall any equipment be installed on any utility pole unless specifically stated on the plans.

3.6.5 The Contractor shall notify the telephone company whenever a service connection is to be made on a jointly owned pole, providing the telephone company with the following information:

(a) Intersection
(b) Pole Number
(c) Date and time of preliminary arrangement with electric power company.

3.6.6 In the case of underground services, the Contractor shall furnish and install all equipment as required by the power company, be responsible for all charges incurred thereby, and complete the work to its satisfaction. Meters shall not be installed in manholes.

3.6.7 The Contractor shall be responsible for all outstanding bills of the electric power company for preliminary work done by the power company during the construction of the road to facilitate the service connection of that particular installation. The Contractor shall also be responsible for all service charges until the signals are accepted for operational use by the Engineer.

3.7 Signal Cable and Wire Installation.

3.7.1 The Contractor shall furnish and install sufficient cable and wire to operate the system properly and at least 4 spare conductors in each cable run shall be provided.

3.7.2 No more than one cable shall be permitted in a conduit except to eliminate splices in pull boxes. When more than one cable is permitted, the area of combined cables shall not exceed 30 percent of the inside area of the conduit.

3.7.3 All pedestrian signals and push buttons shall be individually wired from the field to the cabinet terminals.

3.8 Signal bases, housings, and controllers shall be furnished and installed as required. All structures and housings shall be plumb after erection.

3.8.1 Multiple housings on a single post shall be grouped together using 1-1/2 inch galvanized pipe and 1-1/2 inch galvanized rail fittings. All attachments to the posts shall be made by means of adaptors conforming to 2.2.2. The center of all housings shall be in the same horizontal plane.

3.9 Miscellaneous electrical equipment. All additional electrical fittings, service conduit, switches, fuses, traffic signal bulbs, and such other hardware as is necessary to properly and securely install the equipment shall be furnished. All electrical fittings shall be weatherproof.

3.10 Wiring and connections. All connections shall be spliced, soldered, compounded, and taped, using the following color code:

(a) Red Wire	Red, Main Street
(b) Orange Wire	Yellow, Main Street
(c) Green Wire	Green, Main Street
(d) Red with tracer	Red, Side Street
(e) Orange with tracer	Yellow, Side Street
(f) Green with tracer	Green, Side Street
(g) White	Neutral for all signals
(h) Blue	All steady burning arrows
(i) Blue with tracer	Intermittent arrows
(j) Remaining	Push buttons and spares

Note: The white wire shall be used for all neutral connections and shall be connected to the service ground.

3.11 Ground connections. All installations and equipment shall be bonded and grounded to the service ground rod in accordance with the requirements of the electric power company.

3.11.1 Each signal cable run shall be installed with one green plastic covered copper ground wire to which all equipment shall be bonded in accordance with standard practice. Each base and post, cabinet, and any other component that would be considered a part of the signal system shall be bonded to the ground wire. This ground wire shall be connected to the ground rod at the controller cabinet.

3.11 Painting. The following colors of enamel shall be used:

(a) Controller Cabinet	Outside: Green (1); Inside: White (4)
(b) Housings	Yellow (3)
(c) Visors	Inside: Black (2); Outside: Yellow (3)
(d) Meter Box.	Same color as its mounting

(1) Green Enamel	= 708-NH 3.74
(2) Black Enamel	= 708-NH 3.75
(3) Federal Yellow Enamel	= 708-NH 3.72
(4) White Enamel	= 708-NH 3.73

After the signals have been completely installed, two coats of enamel shall be applied to all unpainted or scratched surfaces after the surface has been lightly sanded to remove gloss.

3.13 Operating sequences shall be as shown on the plans or ordered.

3.14 Installation of signals and equipment. The signals and equipment shall be installed by competent workmen or the manufacturer's representative.

3.14.1 Prior to placing the signals in operations, the signal housing shall be hooded with approved non-transparent material or turned to clearly indicate that the signals are not in operation.

3.14.1.1 Signs mounted with the signals shall be covered as specified in 619.

3.14.2 All material including poles, foundations, fittings and cable shall be supplied and installed to make complete operative installation.

3.15 Operation. The Contractor shall commence the operation of the signal system only when permitted by the Engineer.

3.16 Warranty. Upon completion of the project, the Contractor shall forward to the Commissioner all warrants to the purchaser that the equipment which has been installed hereunder shall be free from defects in materials, workmanship, and title, and shall be of the kind and quality designated or described in the contract. The foregoing warranty supersedes all other warranties whether written, oral, or implied. If it appears within 6 months from the date of final acceptance of the work that the equipment installed hereunder does not meet the warranties specified above, the Contractor shall promptly correct any defect of nonconformance with the specifications. This warranty does not relieve the Contractor of the requirement of 106.04.

Method of Measurement

4.1 Traffic signals and flashing beacons will be measured as a unit. Where more than one unit is specified in the contract, separate item numbers will appear for each separate and complete unit.

Basis of Payment

5.1 The accepted quantity of traffic signals or flashing beacons will be paid for at the contract lump sum price complete in place.

5.2 When an item of conduit appears in the contract, conduit for traffic signals will be paid for under 614.

5.2.1 When no item for conduit appears in the contract, any conduit required will be subsidiary.

5.3 Materials required under 3.9 shall be subsidiary.

Pay Items and Units:

616.1__	Traffic Signals	Lump Sum
616.2__	Flashing Beacons	Lump Sum

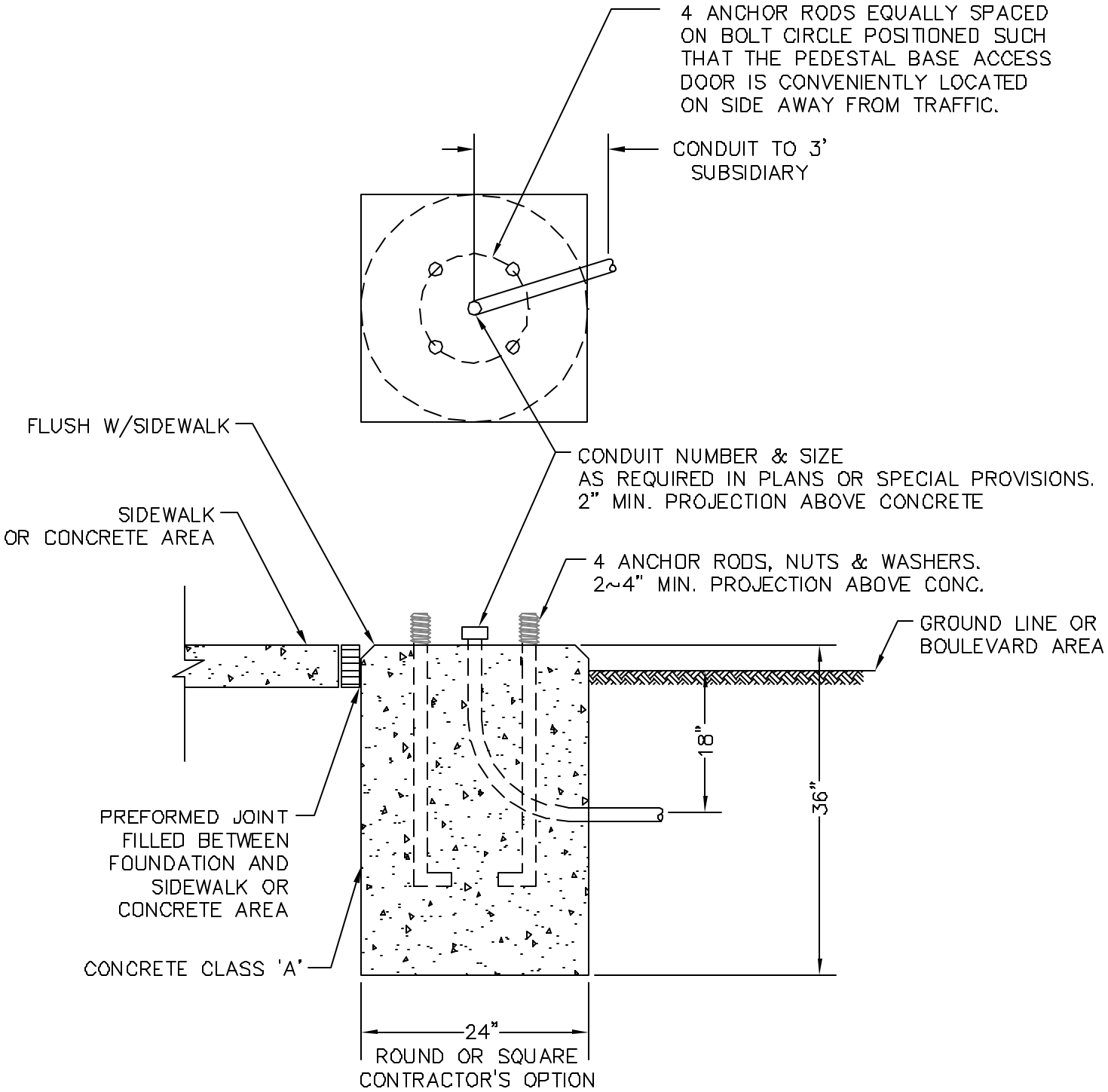

SIZE OF FOUNDATION MAY BE CHANGED IN THE PLANS OR SPECIAL PROVISIONS, OR IN THE FIELD AS DIRECTED BY THE ENGINEER.

ANCHOR RODS SHALL BE SET ACCORDING TO MANUFACTURER'S RECOMMENDATIONS.

UPPER PART OF FOUNDATION SHALL BE BEVELED OR CHAMFERED IN A NEAT MANNER AS DIRECTED BY THE ENGINEER IN THE FIELD.

OPEN END OF ALL CONDUIT INTO FOUNDATION SHALL BE CAPPED UNTIL SIGNAL CABLES ARE INSTALLED.

CONC. FOUNDATION FOR STD. TRAFFIC SIGNAL POST

S:\DWG\DETAILS\616-1 TFFOUND.DWG

NOT TO SCALE

FIG. 616-1

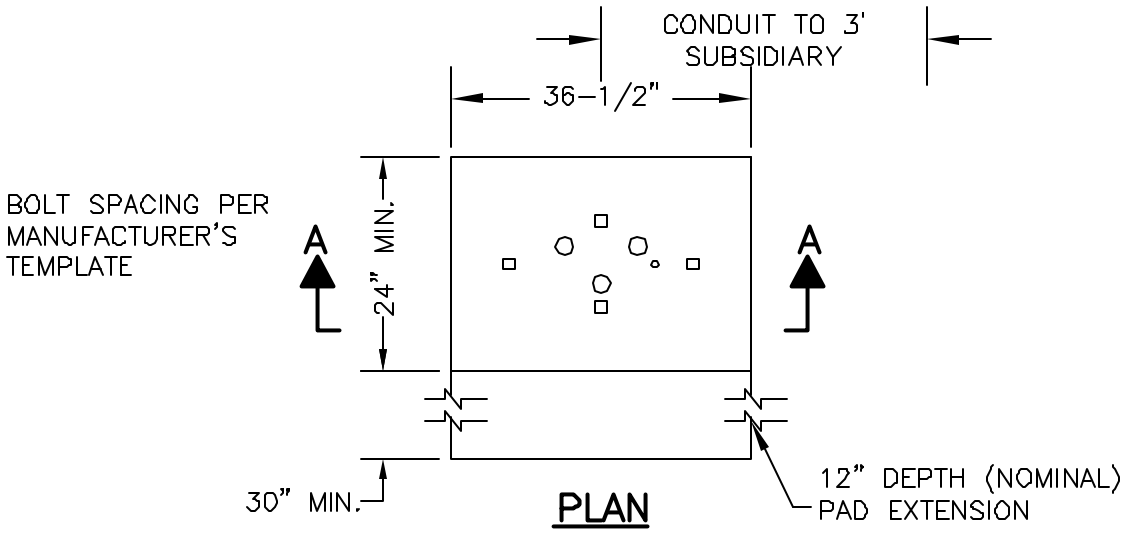

PLAN

*FOUNDATION SHALL BE 6" WIDER AND LONGER THAN CABINET BASE TO BE INSTALLED

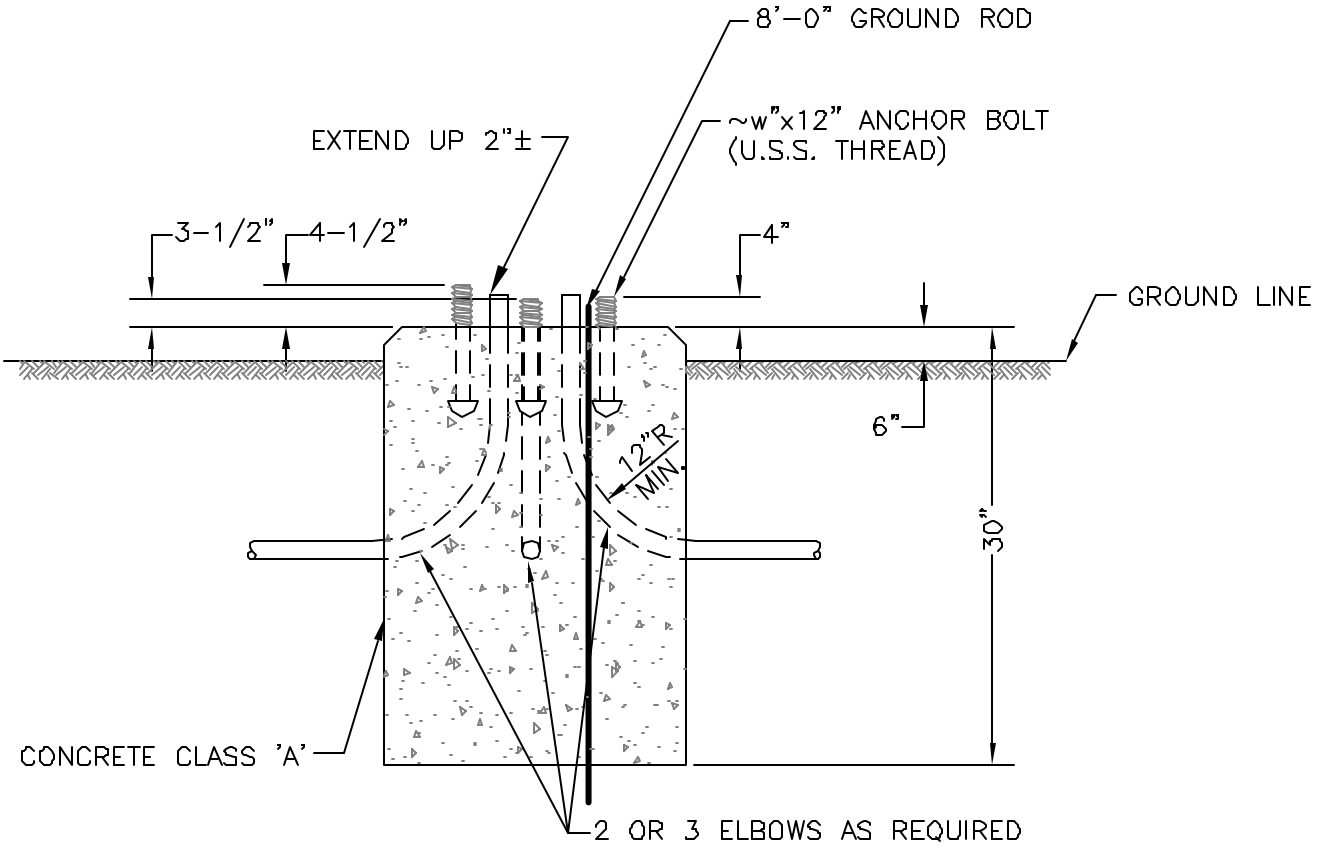

SECTION A-A

PAD MAY BE ELIMINATED IF CONTROLLER IS IN SIDEWALK SECTION.

UPPER PART OF FOUNDATION SHALL BE BEVELED OR CHAMFERED IN A NEAT MANNER AS DIRECTED BY THE ENGINEER IN THE FIELD.

CONC. FOUNDATION FOR CONTROL CABINET

S:\DWG\DETAILS\616-2 CABFOUND.DWG

NOT TO SCALE

FIG. 616-2

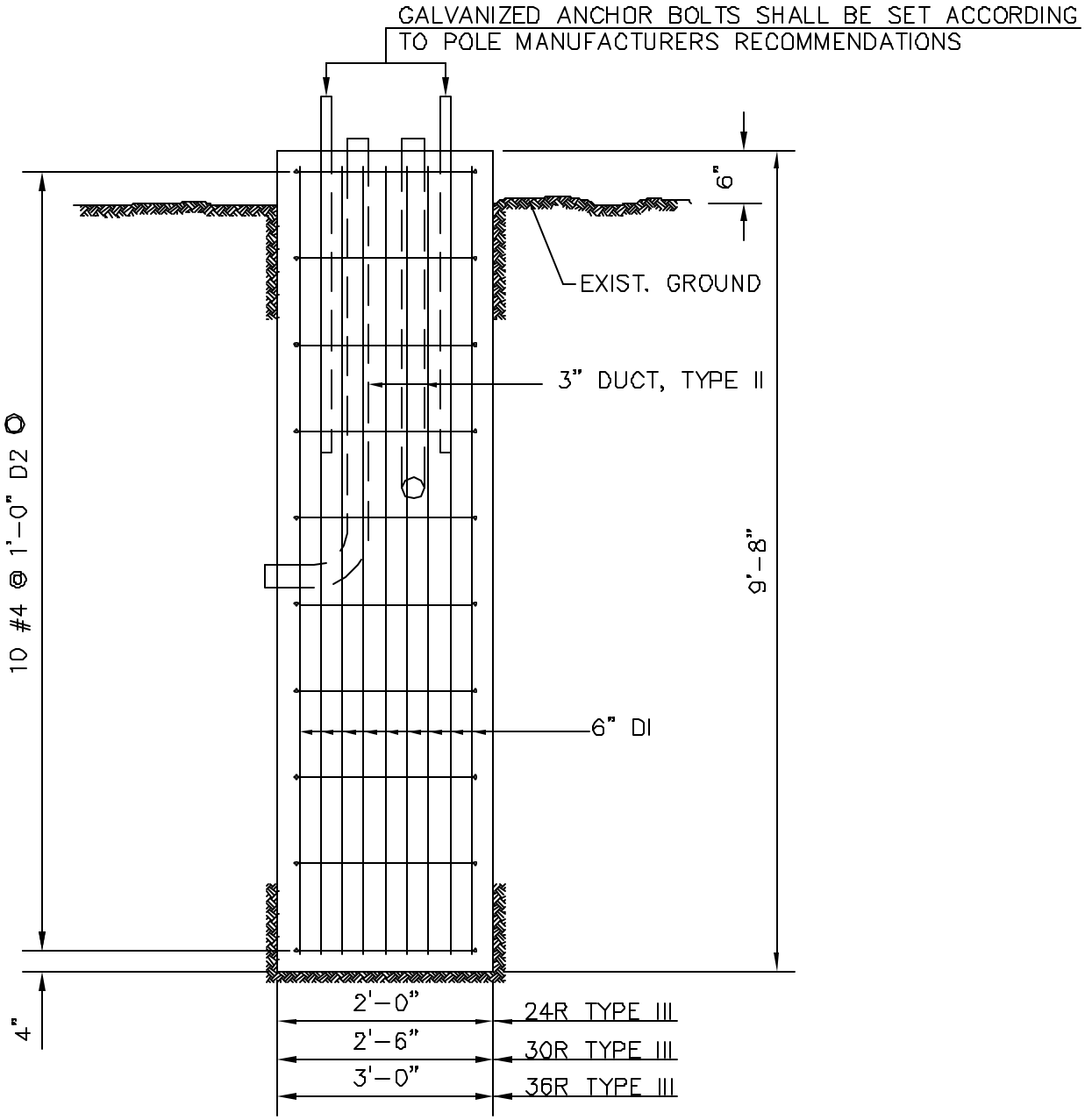

ELEVATION

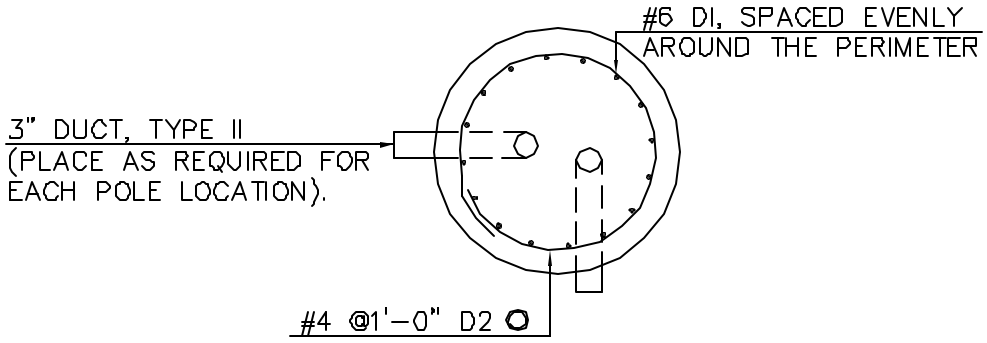

PLAN

TRAFFIC SIGNAL FOUNDATION

S:\DWG\DETAILS\616-3 STDFNDN.DWG

NOT TO SCALE

FIG. 616-3

FOUNDATION TYPE III -- 24R, 30R, 36R*

REINFORCING STEEL SCHEDULE – FIG. 616–4a

MARK	SIZE	NO.	UNBENT LENGTH	TYPE
D1	#6	"X"	9'–2"	——
D2	#4	10	"Y"	

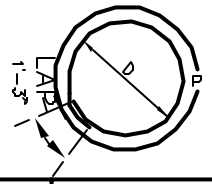

#4 D2

FOUNDATION SIZE	NO "X"	UNBENT LENGTH "Y"
24R	12	5'–11"
30R	16	7'–6"
36R	20	9'–1"

FOUNDATION SIZE	DIMENSION	
	D	P
24R	1'–6"	4'–8"
30R	2'–0"	6'–3"
36R	2'–6"	7'–10"

TYPICAL QUANTITIES PER BASE – FIG. 616–4b

ITEM NUMBER	ITEM	UNIT	QUANTITY FOR FOOTING SIZE		
			24R	30R	36R
▲ 508	STRUCTURAL FILL	CU. YDS.	29	31	34
520.11	CONCRETE CLASS A (FOOTINGS)	CU. YDS.	1.2	1.8	2.6
544	REINFORCING STEEL	LBS.	205	271	336

STANDARD ROUND TRAFFIC SIGNAL FOUNDATION – FIG. 616–4c

DETERMINATION OF SIZE FOOTING REQUIRED

FOOTING SIZE	CASE I MAX. h = 40'–0" MAX h' = 22'–0"			CASE II MAX. h = 22'–0"		
	SHAPE	MAX. LENGTH OF ONE MAST ARM WITH ONE LUMINAIRE ON THE SAME POLE (L)	MAX. NUMBER OF SIGNALS FOR CASE I	SHAPE	MAX. LENGTH OF ONE MAST ARM WITH ONE LUMINAIRE ON THE SAME POLE (L)	MAX. NUMBER OF SIGNALS FOR CASE II
24R–TYPE III (2'–0" x 9'–8")	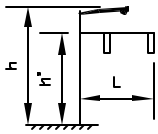	16'–0"	2	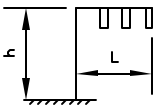	26'–0"	3
30R–TYPE III (2'–6" x 9'–8")	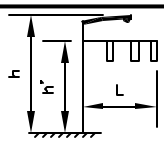	26'–0"	3	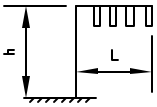	36'–0"	4
36R–YTPE III (3'–0" x 9'–8")	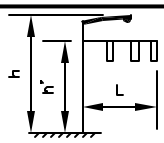	36'–0"	3	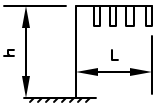	45'–0"	4

NOTE: COMBINATIONS OTHER THAN THOSE SHOWN IN THE ABOVE CHART SHALL NOT BE USED WITHOUT DESIGN APPROVAL

*SEE TRAFFIC SIGNAL FOUNDATION PLAN GENERAL NOTES (FIG. 616–4d)

TRAFFIC SIGNAL FOUNDATION

S:\DWG\DETAILS\616–4abc SIGFNDN.DWG

FIG. 616–4a,b,c

GENERAL NOTES

DRILLED HOLES

1. THE ROUND TYPE III FOOTING SHALL BE POURED IN DRILLED HOLES AGAINST UNDISTURBED MATERIAL. THE MAXIMUM DESIGN SOIL PRESSURE IS 1-1/2 TONS/SQ.FT. (BOTH HORIZONTALLY & VERTICALLY). IF THE SOIL IS NOT CAPABLE OF A BEARING PRESSURE OF 1-1/2 TONS/SQ.FT. OR WILL NOT STAND VERTICALLY, THE ENGINEER SHALL REQUEST AN EXCAVATED HOLE AS BELOW.

2. THE DRILLED HOLES FOR THE ROUND TYPE III FOOTINGS SHALL BE MADE WITH THE PROPER SIZE AUGER DRILLED TO 9'-2" BELOW THE FINISHED GROUND SURFACE.

3. TRENCHES FOR THE CONDUITS SHALL BE HAND DUG WITHIN 5'-0" OF THE PROPOSED FOOTING SURFACE, DISTURBING AS LITTLE SOIL AS POSSIBLE IN PLACING OF THE CONDUITS (APPROXIMATELY 2'-6" MAXIMUM DOWN FROM THE EXISTING GROUND SURFACE). THE RESULTING TRENCHES SHALL BE COMPLETELY BACKFILLED WITH ITEM 508 AND COMPACTED ACCORDING TO THE NH SPECIFICATIONS. THE HORIZONTAL LIMIT OF ITEM 508 SHALL BE 5'-0" FROM THE FOOTING SURFACE.

4. THE ENGINEER SHALL REQUEST A BORING AT ANY LOCATION WHERE HE DEEMS QUESTIONABLE SOILS BEFORE PROCEEDING WITH THE DRILLING OPERATION. IF, AFTER THE DRILLING OPERATION, THE SOILS ARE FOUND TO BE UNSUITABLE, THE ENGINEER SHALL REQUEST AN EXCAVATED HOLE AS BELOW OR THE USE OF EITHER TYPE I OR OR II SPREAD FOOTING.

5. WHERE LEDGE IS ENCOUNTERED THE DRILL SHALL PENETRATE THE LEDGE A MINIMUM OF 3'-0" AND IN ALL CASES A MINIMUM FOOTING LENGTH OF 5'-0" SHALL BE OBTAINED WHERE LEDGE IS DRILLED 3'-0". MAXIMUM DRILL PENETRATION SHALL BE 9'-2".

6. ALL REINFORCING STEEL SHALL BE EITHER GRADE 40 OR GRADE 60.

7. ALL REINFORCING STEEL SHALL BE A MINIMUM 3" CLEAR.

▲ EXCAVATED HOLES

1. AS AN ALTERNATIVE TO THE ABOVE DRILLED HOLES, THE ROUND TYPE III FOOTINGS MAY BE POURED IN EXCAVATED HOLES, USING THE PROPER FORMS WHICH MUST BE REMOVED, OR PRECAST AND PLACED IN THE EXCAVATED HOLES.

2. THE EXCAVATED HOLES SHALL BE AT LEAST 2'-0" CLEAR OF THE FOOTING SIDES AND 1'-0" DEEPER THAN THE FOOTING. CARE SHALL BE TAKEN TO AVOID OVER EXCAVATING AROUND THE TOP OF THE FOOTING.

3. ANY LEDGE ENCOUNTERED SHALL BE REMOVED TO THE ABOVE LIMITS IF POSSIBLE OR THE ENGINEER SHALL REQUEST A REDESIGN.

4. THE TOTAL EXCAVATED HOLE FOR EACH FOOTING SHALL BE COMPLETELY BACKFILLED WITH STRUCTURAL FILL, ITEM 508, AND COMPACTED ACCORDING TO THE NH SPECIFICATIONS.

TRAFFIC SIGNAL FOUNDATION GENERAL NOTES

S:\DWG\DETAILS\616-4d TRF-SIGFNDN.DWG

FIGURE 616-4d

SECTION 618 -- UNIFORMED OFFICERS AND FLAGGERS

Description

1.1 This work shall consist of furnishing qualified officers and flaggers, when ordered.

Requirements

2.1 Uniformed officers shall be hired from the Manchester Police Department whenever possible for the control of traffic on City streets. The Contractor shall give the Manchester Police Department a minimum of 48 hours notice prior to his need for their services.

2.2 In the event a Police Officer is not available, the Contractor may procure uniformed officers and flaggers from a commercial security company, provided they are acceptable to the Manchester Police Department for the purpose of traffic control.

2.3 Uniformed officers employed by the Contractor shall have had formal traffic control training, as provided by the Police Standards and Training Council.

2.4 Officers and flaggers shall have been given specific instructions from the Contractor as to their duties and responsibilities, both to the public and to their fellow workers on the job. They shall handle the movement of the travelling public and shall do all that is reasonable to expedite that movement. They shall have authority to direct the actions of the construction vehicles as well.

2.5 Contractors or subcontractors supplying flaggers shall have an employee that has been certified as a trainer of flaggers. Individuals doing the flagging shall have been trained by that trainer or have taken an approved flagging course.

2.6 Uniformed officers and flaggers shall be clothed in a suitable and characteristic manner that will readily distinguish them from all other employees.

2.6.1 Uniformed officers shall be attired with regulation duty uniforms, headgear and reflective vests with or without white stripes, and shall wear an exposed badge.

2.6.2 Flaggers shall be attired with blaze orange caps and vests with or without white stripes. Inappropriate attire shall not be allowed.

2.7 Authorities providing uniformed officers or subcontractors supplying flaggers will designate a person as the responsible party to coordinate the traffic control procedures with both the general superintendent and the Engineer. This person will be responsible to collect and report the time of actual traffic control to all interested parties.

2.8 Personnel Requirements and Authority.

2.8.1 Flaggers shall possess the following qualifications: at least average intelligence and alertness, good sight and hearing, courteous but firm manner, neat and presentable appearance, pleasing personality and a sense of responsibility.

2.8.2 Uniformed officers shall have police powers granted by the authorities having legal jurisdiction in the work area.

2.8.3 Uniformed personnel from commercial security firms shall be regarded as flaggers.

2.8.4 For night operations, high-intensity reflectorized clothing and the use of lighting shall be required, as stated in the Traffic Manual.

Equipment

3.1 Traffic paddles and flagger equipment shall conform to those described in the Traffic Manual (MUTCD)

Method of Measurement and Payment

4.1 Work performed under this Section will be paid for in the same manner as extra work. The allowance amount established in the proposal will not limit the Engineer in the value of work ordered performed under this item.

4.2 The Bidder's attention is called to the price inserted in the proposal under this item, which price is the allowance the City has established to pay for uniformed officers and flagger. This figure (1) must not be altered by the Bidder on his proposal and (2), must be included to obtain the grand total of the bid.

4.2.1 Payment of the amount included in the proposal will not be on a lump sum basis. Only the value of work ordered will be paid for.

4.3 Payment for uniformed officers and flaggers hired by the Contractor from the Police Department or commercial security company shall be based on receipted bills computed on an hourly basis for services rendered to which no mark-up factor will be added.

4.4 No additional compensation will be due the Contractor under this item for flaggers supplied by the Contractor from his work force.

4.5 Appropriate time record will be required, signed by the employees, the Contractor's representative and the Engineer, to support the reimbursement.

Pay Item and unit:

618.109 Uniformed Officers and Flaggers Allowance

SECTION 619-- MAINTENANCE OF TRAFFIC

Description

1.1 This work shall consist of providing and maintaining safe and passable traffic accommodations for public travel, preventing dust nuisance, furnishing, erecting and maintaining construction signs, barricades, delineators, lights, flashers and other warning devices and the application of short term pavement markings and the removal of inappropriate pavement markings as shown or as ordered.

1.2 When the proposal contains a pay item for construction and warning devices, a list showing the permanent signs and warning devices will appear on the plans. The Contractor's method of operation will determine the actual needs for operational signs and warning devices. Operation signs and warning devices shall be provided in sufficient type, quantity and placement configuration to meet the **Standards** and the **Traffic Manual (MUTCD).**

Materials

2.1 Construction Signs.

2.1.1 Base Material shall meet product standard PS-1, American Plywood Association and shall be 1/2 inch thick medium density overlay (MDO) exterior grade plywood with faces and backs grade BB or better, inner core grade C or better and paper-covered on at least one side.

2.1.2 Sign Blanks shall be prepared in accordance with current practice as recommended by the sheeting manufacturer.
2.1.3 Reflective Sheeting shall be applied over the entire surface of the sign and shall conform to 718, Type IIA or Type III Reflective Sheeting.

2.1.4 Application of Sign Text. The sign text shall consist of the letters, digits and symbols either applied by brush or screened, to conform with the dimensions and designs indicated on the plans for the various types of signs. The materials and methods shall be in accordance with standard commercial processes as approved.

2.1.4.1 Symbols, legend and background shall conform with the plans or the Traffic Manual.

2.1.5 Supports, posts and easels shall be as shown on the plans. Posts other than those shown shall be approved by the Engineer prior to their installation, and shall conform to the current AASHTO "Standard Specifications for Structural Supports for Highway Signs, Luminaires, and Traffic Signals."

2.1.6 Hardware required to attach signs to supports shall be such that no staining or discoloration from exposure occurs on the face of the sign.

2.2 Barricades, Delineators and Vertical Panels shall be as shown on the plans or ordered.

2.3 Hazard Markers shall be as shown on the plans or ordered.

2.4 Lighting Devices shall conform to the requirements of Section 6E of the Traffic Manual except as modified on the plans.

2.5 Channelizing devices shall be as shown on the plans or ordered.

2.6 Temporary Pavement Marking Materials.

2.6.1 Reflectorized traffic marking paint and beads shall conform to the requirements of 708.

2.6.2 Reflectorized traffic marking tape shall conform to the requirements of 711.

2.6.3 Raised pavement markers shall be retroreflective markers **as approved by the Department.**

2.7 Calcium Chloride shall conform to AASHTO M 144, Type S, Grade 3. Other dust pallative material may be submitted to the Engineer for approval.

Construction Requirements

3.1 Maintenance of Traffic Including Dust Laying.

3.1.1 The Contractor's attention is called to the following:

3.1.2 Whenever the street is open to public traffic through any part of the project, the Contractor shall provide and maintain sufficient surface for at least one lane traffic, and two lanes whenever possible. One lane traffic shall be controlled as directed by the use of uniformed officers, flaggers (when no officers are available), radio or pilot vehicle. The Engineer may order the control of traffic by the use of a pilot vehicle at such other times as in his opinion, such control is necessary to insure proper workmanship and for the convenience of the travelling public. Control of one lane traffic will be required for 24 hours each day, unless otherwise permitted.

3.1.2.1 When directed, persons regulating traffic shall be equipped with an approved two-way radio system to be used with or without a pilot car. An approved radio system shall be dependable, allowing clear communication at all times between the operators. Operators

shall be given sufficient instruction and training to be effective. When a pilot car is being used, the traffic regulators shall be notified when the car turns around and is ready to conduct traffic through the work area, and they shall be made aware of such other information as may be necessary for the proper maintenance of traffic. Safety precautions shall be taken to avoid any accidents during blasting operations due to the use of radios.

3.1.3 Whenever heavy equipment is operating adjacent to a roadway open to public travel, the Contractor shall provide adequate traffic control to keep traffic lanes open and safe for such travel.

3.1.4. The Contractor shall also provide and maintain in a safe and passable condition such temporary by-passes, accesses to adjacent properties and approaches to intersecting streets.
3.1.5 When ordered, temporary approaches and portions of the existing street surface between the beginning and end of the project shall be paved.

3.1.6 Guide, regulatory and warning signs showing route designations, directions and other information either existing or supplied by the City, shall be maintained at appropriate locations for the use of the travelling public during the construction period. Signs which are not applicable to construction conditions shall be covered, removed or relocated. Signs that are removed or relocated, will be retained and re-erected by the Contractor. The Engineer and the Manchester Traffic Department shall be notified when any sign is removed or relocated.

3.1.7 Temporary guard rail when required, shall be furnished, erected and maintained under this item unless a separate item is included in the proposal.

3.1.8 Dust laying shall be performed in an approved manner generally by the use of water and shall be continued whenever necessary even though all other work on the project is suspended.

3.1.8.1 The Engineer shall determine when the use of Calcium Chloride is warranted to control dust nuisance. It shall be uniformly applied at a rate sufficient to control dust.

3.1.9 Before any suspension of the work, the Contractor shall make passable and shall open to traffic, such portions of the project and temporary roadways or portions thereof as may be agreed upon between the Contractor and the Engineer.
3.1.10 When construction is acceptable to the engineer, to the extent that traffic is maintained on a paved surface, the City will assume the maintenance of the road without cost to the Contractor during the time the work is suspended. The City will provide for snow removal for the needs of normal traffic.

3.1.11 When work is resumed after any suspension, the Contractor shall replace or renew any work or materials lost or damaged because of such temporary use on the project.
3.1.12 If proper maintenance of traffic and proper provisions for traffic control are not being provided by the Contractor, the City may assume maintenance of the road and deduct the cost from any money due or to become due under the Contract.

3.1.13 Any work performed by the City either when construction operations are taking place or during periods of suspension, shall not invalidate any of the provisions of the contract.

3.2 Construction Signs and Warning Devices.

3.2.1 All construction signs, barricades and warning devices supplied for the project, shall be covered with Type IIA or Type III sheathing, free from scratches, abrasions, chipping or any other damages that may at the discretion of the Engineer, be such as to render them unsatisfactory for use or to reduce reflectivity to less than 70% of new material.

3.2.1.1 All permanent construction signs shall be furnished in new or similar condition.

3.2.1.2 At anytime during the life of the contract, at the discretion of the Engineer any sign, barricade or warning device that is damaged, disfigured or found to be in unserviceable condition may be required to be replaced.

3.2.1.3 Signs not specifically mentioned in the specifications or on the plans, shall be designed, constructed, placed, operated and maintained in accordance with the requirements of the MUTCD or as ordered.

3.2.2 Construction signs shall be erected at the locations indicated on the plans or as ordered. The posts shall be plumb. The signs shall be installed on posts,
barricades or easels so that the text will be horizontal. Signs on easels or barricades shall not be tilted more than 30 degrees from the vertical.

3.2.3 Barricades and delineators shall be erected wherever necessary for the protection of public travel. Such hazards as pits and open trenches, drop-offs, exceptionally rough stretches of the traveled way and all obstructions of any kind, including equipment parked on the roadway shall be barricaded in an approved manner.

3.2.4 Operational signs and channelizing devices shall not be setup until weather conditions will allow adequate visibility.

3.2.5 Lighting devices required or ordered shall be provided to delineate hazards from sunset to sunrise. The type and number of lights and flashing beacons shall conform to the plans and/or the MUTCD.

3.2.6 All signs, barricades, guard rail, delineators, lighting devices and other materials furnished by the Contractor, shall remain the property of the Contractor unless otherwise specified.

3.3 Temporary Pavement Marking Tape.

3.3.1 The Contractor shall install temporary tape to delineate the traveled way. Tape required shall be readily available to the project at the proper time and shall conform to 2.6. Type to be used shall be shown on the plans or as ordered by the Engineer.

3.3.2 Installation. The use of tape in construction work zones shall be placed in accordance with the Traffic Manual and as follows:

3.3.2.1 Tape shall be applied to clean, dry surfaces in accordance with the manufacturer's recommendations or a method approved by the Engineer.

3.3.2.2 At the end of each day's work, tape shall be in-place as required on each paving lift that is open to normal traffic flow. The tape shall be maintained by the Contractor.

3.3.2.3 The Contractor shall be required to remove or cover the tape after it has served its purpose. The use of heat, solvents, grinding or blast treatment shall not be employed in the removal of temporary tape.

3.4 Temporary Painted Pavement Markings. The Engineer may elect to apply temporary painted pavement markings. In this
event, the Contractor shall cooperate with the Engineer in the installation and shall protect the markings.

Method of Measurement

4.1 Maintenance of traffic including dust laying and construction signs and warning devices will each be measured as a unit. Signs when shown on the plans, represent estimated requirements based on anticipated operations.

Basis Of Payment

5.1 The accepted quantities of maintenance of traffic will be paid for at the contract lump sum price for each of the items as listed below with the following exceptions:
5.1.1 Bituminous material placed or applied under 3.1.5 and 3.1.11, will be paid for as provided for under 403.
5.1.2 The material cost of calcium chloride will be paid for as provided for under 109.04. The labor and equipment necessary for material application shall be subsidiary.

5.2 Construction signs and warning devices will be paid for at the contract lump sum price. Payment will be made periodically based on the anticipated construction period contingent upon the installation of the permanent signs and delivery of operational controls.

5.2.1 If new signs or devices are purchased and delivered to the project site, an initial payment will be made based on a paid invoice up to 50 percent of the amount bid. Subsequent payments will be made periodically based on the anticipated construction period.

5.2.2 Replacement of any sign, barricade or warning device required by 619.3.2.2 will be subsidiary.

5.2.3 The material cost of permanent construction signs ordered but not included in the listing on the contract plans will be paid for as provided in 109.04. The labor and equipment cost for installation will be subsidiary.

5.3 Short term pavement markings will be paid at the contract unit price complete in place for each of the items constructed. Although different colors may be required or ordered, no color distinction will be made in the pay items. Payment for short term pavement markings placed will include repair, and replacement as required.

5.4 Work ordered under 3.1.11 that resulted from Department maintenance operations will be paid as provided in 109.04.

5.5 Unless an item is included in the contract for moving signs, moving of Type A signs (only) will be paid as provided in 109.04. All other guide signs covered, removed or relocated as provided in 3.1.6 will be subsidiary.

5.6 When no provision for these items is included in the contract, the work will be subsidiary.

Pay Items and Units:

619.1	Maintenance of Traffic Including Dust Laying	Lump Sum
619.2	Construction Signs and Warning Devices	Lump Sum
619.31	Short Term Reflectorized Paint & Pavement	Lump Sum

SECTION 620 -- CALCIUM CHLORIDE

Description

1.1 This work shall consist of furnishing and applying flake calcium chloride as ordered at such locations as the Engineer may direct for the purpose of reducing the dust nuisance to the travelling public or adjacent residences.

Materials

2.1 Calcium Chloride shall conform to AASHTO M144, Type 1 except the requirements for "total alkali chlorides" and other impurities shall not apply.

Construction Requirements

3.1 Calcium chloride shall be uniformly applied at the rate ordered.

3.2 Calcium chloride will be ordered when the Engineer determines that its use is warranted to control dust. Application of calcium chloride will ordinarily be ordered to control dust on sections of construction open to the public during holidays and weekends only. It may be ordered for detours at anytime.

Method Of Measurement

4.1 Calcium chloride will be measured by the ton in accordance with 109.01 on the basis of delivery slips forwarded to the Engineer but not to exceed the rate ordered. Measurements will be made to the nearest 0.01 of a ton.

Basis Of Payment

5.1 The accepted quantity of calcium chloride will be paid for at the contract unit price per ton complete in place.

Pay Item and Unit:

620	Calcium Chloride	Ton

SECTION 622 -- BOUNDS

Description

1.1 This work shall consist of furnishing and erecting bounds in accordance with the plans and at the required locations.

Materials

2.1 Concrete Bounds shall be as shown on the plans with concrete conforming to 520 and reinforcing steel conforming to 544.2.3

2.2 Stone Bounds shall be magnetized, and shall be cut from hard and durable granite and shall be free from seams which would impair their structural integrity, solid quartz or feldspar veins will not be cause for rejection. Dimensions shall be 4 inches to 8 inches square by not less than 4 feet - 0 inches in length. The top of the bound shall be roughly perpendicular to the length of the stone and shall have a 1/2 inch drill hole at least 1/2 inch deep near or at the center.

2.3 Backfill shall conform to 209.

Construction Requirements

3.1 Concrete Bounds.

3.1.1 Bounds shall be set as ordered on the right-of-way lines at the beginning and ends of curves, beginning and ends of spirals, angle points and on tangents with a maximum distance between bounds of 1,000 feet.

3.1.2 The exact location for each bound will be established by a land surveyor licensed by the State of New Hampshire.

3.1.3 The excavation shall be made to a sufficient depth to allow the bound to protrude 4 inches above the natural ground surface if in mowing land, 6 inches if in land not under cultivation or 12 inches if in woodland. Bounds in the roadway slope shall be set to protrude not more than 6 inches on the low side. The bound shall be set with the letters ED to read from the road, and the backfill shall be thoroughly tamped in place. Bounds set in mowing land shall be encircled by a mound of earth at least 4 feet in diameter and flush with the top of the bound at the center.

3.1.4 Unless otherwise ordered when rock is encountered, the bounds cut off if necessary, shall be firmly bonded to the rock.

3.1.5 When a tree or heavy root is encountered in setting bound, a steel pin at least 30 inches long and 3/4 inch in diameter shall be driven when ordered. The bound shall then be set at the nearest practical location as directed.

3.2 Stone Bounds

3.2.1 Stone bounds shall be set at points shown or ordered in accordance with 3.1 except that the letters ED in 3.1.3 will not apply.

3.3 Resetting.

3.3.1 Bounds to be reset shall be removed and reset without causing damage to the bounds. Location of the bound shall be recorded by a licensed land surveyor before removal, and the bound shall be reset in accordance with 3.1.2 and 3.1.3.

Method Of Measurement

4.1 Concrete bounds and stone bounds will each be measured by the number of types installed or reset.

Basis Of Payment

5.1 The accepted quantities of concrete bounds, stone bounds and bounds reset, will be paid for at the contract unit price per each for the kind specified complete in place.

5.1.1 Ordered excavation of solid rock for bounds to a limit of 1 foot from the sides of the bound, will be paid for at 100 dollars per cubic yard under 622.9. Payment will be made to the nearest 0.1 of a cubic yard.

5.1.2 No extra allowance will be made for handling of bounds to be reset or for any excavation required to remove bounds from their original sites.

5.1.3 Pins used as specified in 3.1.5 will be subsidiary.

Pay Items and Units:

622.2	Concrete Bounds	Each
622.4	Stone Bounds	Each
622.52	Resetting Bounds	Each
622.9	Rock Excavation for Bounds*	C.Y.

*Not a bid item. See 5.1.1

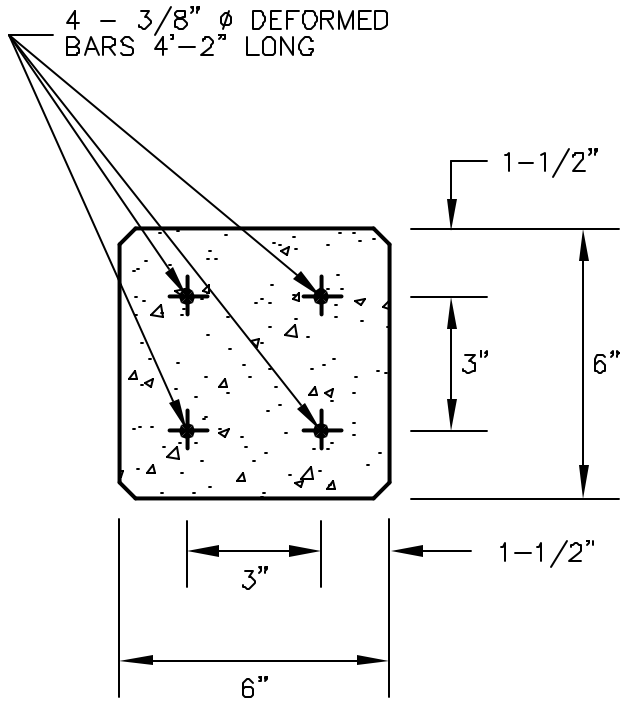

SECTION

NOTE: CONCRETE SHALL BE CLASS A. COARSE AGGREGATE TO BE SIZE NO. 4 TO 1". ALL FACES OF BOUND MUST BE FREE FROM HONEYCOMB. BOUNDS TO BE SET IN GRAVEL, 9" ON ALL SIDES OF AND UNDER BOUND.

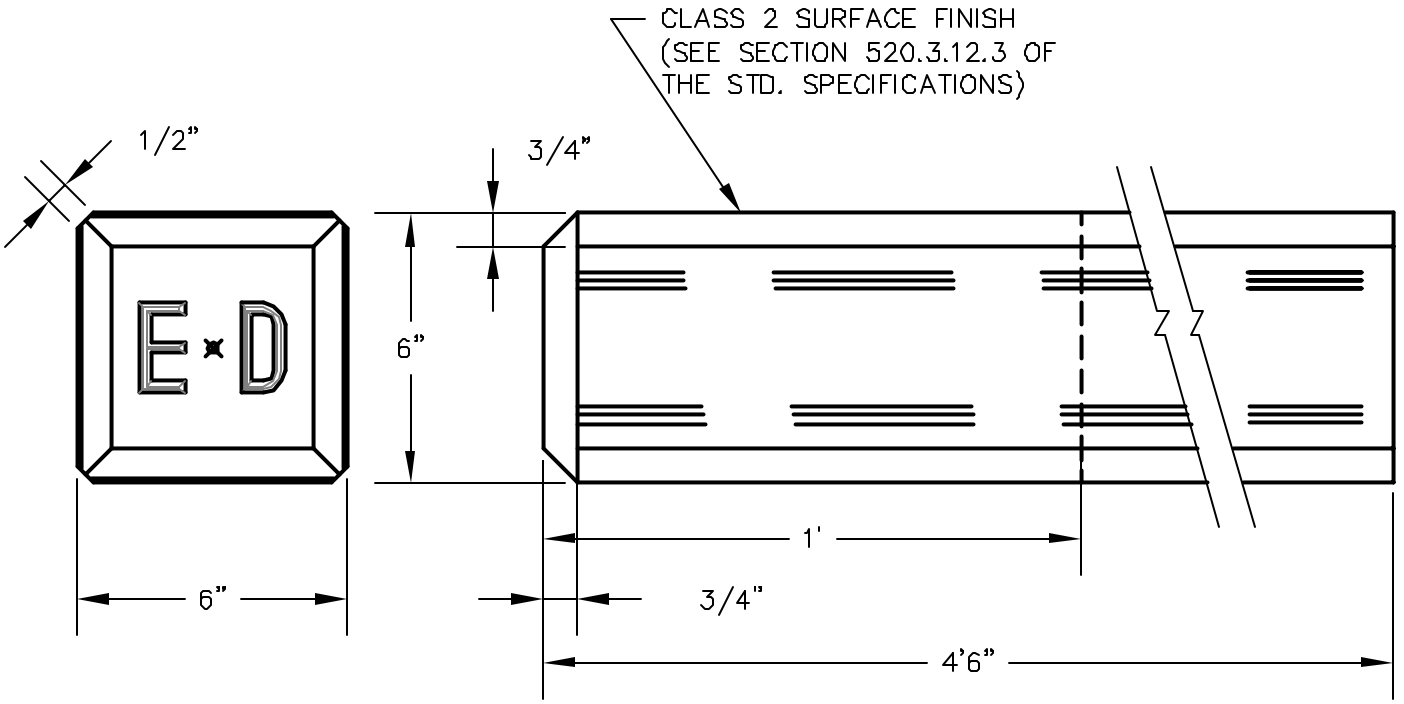

DETAIL OF CONCRETE BOUND

S:\DWG\DETAILS\622-1 BOUND.DWG

FIGURE 622-1

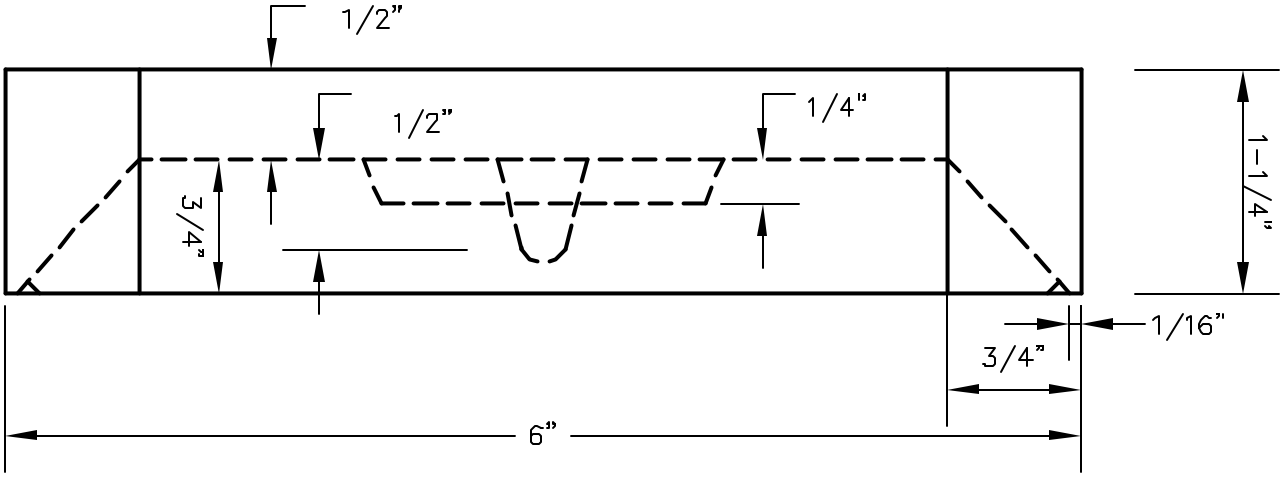

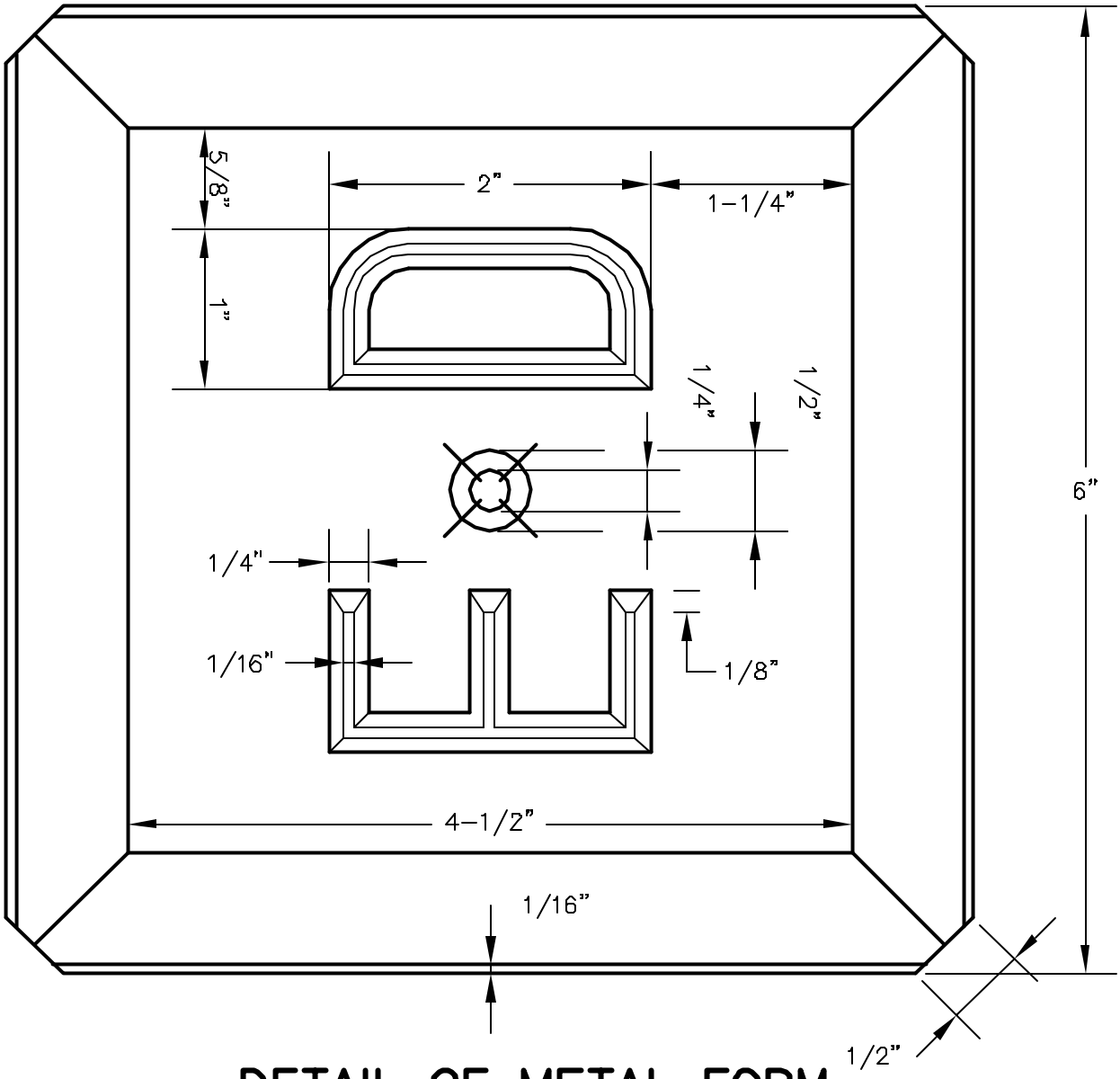

DETAIL OF METAL FORM FOR THE TOP OF CONCRETE BOUND

S:\DWG\DETAILS\622-2 BOUND.DWG

FIGURE 622-2

SECTION 624 --RAILROAD PROTECTION

Description

1.1 This item shall consist of all work necessary to insure the protection of railroad traffic during the progress of the work. The Contractor shall notify the Railroad of all anticipated work, and shall secure all necessary permits from the Railroad, including Railroad Protective Liability Insurance and arranging for flagmen as necessary.

1.2 This item shall include the services of all flagmen, swithch tenders, pilots, conductors, watchmen and similar protective labor; the installation and operation of gates, bell systems, warning lights and other protective devices, all as required by the Railroad to protect the operation and assure the safety of its equipment. The service shall be secured by the Contractor, who will reimburse the Railroad.

Method Of Measurement

4.1 Work performed under this Section will be paid for in the same manner as extra work.

4.2 The Bidder's attention is called to the price inserted in the proposal under this item, which price is the allowance the City has established to pay for Railroad Protection. This figure (1) must not be altered by the Bidder on his proposal and (2), must be included to obtain the grand total of the bid.

4.2.1 Payment of the amount included in the proposal will not be on a lump sum basis.

4.3 All payment for Railroad Protection will be made by the Owner to the Contractor based on and in the amount of submitted invoices from the Railroad. The Contractor shall not be entitled to any mark-up on the submitted invoices.

Basis Of Payment

Pay Item and Unit:

624	Railroad Protection	Allowance

SECTION 628 -- SAWED PAVEMENT

Description

1.1 This work shall consist of sawing concrete pavement, bituminous concrete pavement or both where concrete is overlaid with bituminous pavement, as shown on the plans or as ordered.

Construction Requirements

3.1 Concrete pavement or bituminous concrete pavement to be sawed shall be accurately marked before sawing.

3.2 The equipment used to saw concrete or bituminous pavement shall be capable of sawing the pavement as shown on the plans or as ordered and shall produce a substantially vertical and sound face without deformation of the adjacent pavement. The use of cutting wheels, pavement breakers, etc., which deform the pavement or leave an unsound face, will not be permitted.

3.3 Contraction joints to be cut in concrete pavement shall be cut to the width and depth as shown on the plans and filled with the type of filler shown on the plans.

3.4 Concrete pavement or bituminous concrete pavement to be sawed in connection with laying pipes, roadway excavation, constructing curb and the like, shall be of sufficient depth to permit breaking the pavement at the cut.

3.4.1 Where the pavement is found to consist of an overlay of bituminous concrete pavement above a concrete slab, the cut shall be increased enough to score the underlying concrete so that the concrete may be broken in a reasonably uniform manner.

Method Of Measurement

4.1 Sawed pavement of the type specified will be measured by the linear foot.

Basis Of Payment

5.1 The accepted quantity of sawed pavement will be paid for at the contract unit price per linear foot .

5.1.1 No separate payment will be made for filler.

5.1.2 Construction joints sawed in connection with 403 will not be paid for under this item.

5.2 Payment will be made under 628.3 only when bituminous concrete pavement and concrete pavement are sawed one above the other.

Pay Items and Units:

628.1	Sawed Concrete Pavement	Linear Foot
628.2	Sawed Bituminous Concrete Pavement	Linear Foot
628.3	Sawed Pavement	Linear Foot

SECTION 629 -- TESTING OF MATERIALS

1.1 General.

1.1.1 The Contractor shall employ an independent, qualified testing laboratory approved by the Engineer for conducting all required initial tests of concrete, trench backfill and embankment compaction and other like materials as specified and directed by the Engineer. Test results and laboratory recommendations shall immediately be made available to the Engineer. Three (3) certified copies of the test results bearing the name of the testing company, type of test, test number, date and location test was conducted, are to be presented to the Engineer promptly enabling the Engineer to make his determination of the acceptability or unacceptability of the material to meet these specifications.

1.1.2 All additional tests necessitated by the failure of initial tests as determined by the Engineer shall be conducted as directed by the Engineer. The Contractor shall take immediate corrective measures as suggested by the testing laboratory and/or directed by the Engineer to make the materials meet or exceed these specifications.

2.1 Concrete Testing.

2.1.1 All concrete to be used in the work shall be subject to testing to determine whether it conforms to the requirements of the specifications. The methods of testing shall conform to the appropriate specification but the place, time frequency and method of sampling, will be determined by the Engineer in accordance with the particular conditions of this project.

2.1.2 Concrete shall be of such consistency that it can be worked readily into all parts of the forms and around embedded work without permitting the materials to segregate or free water to collect on the surface. Consistency shall be measured by the ASTM Standard Method of Test for Slump of Portland Cement Concrete Designation C143. The consistency of concrete shall conform to the following slump requirements:

a)	Pavements & slabs on ground,	Normal 1-2	Maximum 3
b)	Massive reinforced sections,	Normal 2-3	Maximum 4
c)	Other reinforced walls & footings,	Normal 3-4	Maximum 5

Overly wet mixes with slumps exceeding those given above, are not acceptable and will be rejected by the Engineer.

2.1.3 Field tests of concrete for compressive strength shall be taken, cured and tested by the approved testing laboratory as directed by the Engineer. A minimum of four (4) specimens shall be made for each test. One specimen shall be broken at 7 days, one at 14 days, the other at 28 days. Specimens shall be made and tested in accordance with ASTM Specification C39 and C31. Where there is any question as to the quality of the

concrete in the structures, the Engineer will require the Contractor at his expense, to have tests made by an approved independent testing and inspection laboratory. Such tests shall be in accordance with the "Standard Methods of Securing, Preparing and Testing Specimens of Hardened Concrete for Compressive and Flexural Strengths" (ASTM Designation C42) or Sections 202 and 203 of the current A.C.I. Building Code for Reinforced Concrete (A.C.I.318) as may be required. The criteria for acceptability of the concrete under the latter, shall be that given therein. Concrete failing to meet the specification requirements shall be removed and replaced at the Contractor's expense.

2.1.4 Unless otherwise noted in these specifications or on the contract plans, all concrete masonry shall contain air-entrained cement. The average resulting air content in field mixtures shall be five (5%) percent when measured by means of an Acme Air Meter or an approved equal in conformity with the ASTM Standard Method of Test for air content of freshly mixed concrete by the "Pressure Method, Designation C231". Such tests shall be performed by the approved testing laboratory in the presence of and as directed by the Engineer. Any concrete for which the individual air content is less than 3.5 or greater than 6.5 percent, will be rejected.

3.1 Trench Backfill, Roadway Bases & Embankment Compaction Testing.

3.1.1 The Contractor shall provide samples of each backfill material from the proposed sources of supply. The Contractor shall allow sufficient time for testing and evaluation of results before material is needed. Samples from alternate sources shall be submitted if required. The Engineer will be the sole and final judge of the suitability of all materials.

3.1.2 Materials in question pending tests results shall not be used. Any materials rejected shall be removed and replaced with new acceptable materials whether in stockpiles or in place.

3.1.3 Compaction shall continue until the unit dry weight of the fill reaches a value of not less than the specified maximum unit dry weight attained in a laboratory compaction test performed under the specifications of ASTM D1557-64T, Method "A" (Backfill material of a stony nature shall be tested under Method "C" or "D" of the same ASTM Designation) or other approved ASTM or AASHTO Specifications. Such tests shall also be used for establishing the optimum moisture content of the material. The in-place dry unit weight of the compacted material shall be determined by methods specified under ASTM "D" 1556-58T or other approved ASTM of AASHTO Specifications. The in-place compaction test to be consistent with the approved laboratory compaction test.

3.1.4 At least one laboratory compaction test shall be performed for each distinctive type of material to be incorporated. These laboratory tests to be taken at the suggestion of the testing laboratory and/or as directed by the Engineer. A minimum of two (2) in-place moisture-density determinations shall be made for each 500 linear feet of trench backfilled. The actual number of compaction tests, their locations and depth shall be determined by the Engineer. The percentage compaction of the fill at the point of the in-place moisture-density test shall be computed as follows:

Percentage compaction = DF x 100 DL
in which:

DF= Unit dry weight in lb ./cubic feet of sample in field moisture-density determinations.

DL= Maximum unit dry weight in lb./cubic feet obtained in the specified laboratory compaction test on a sample of the same type of material.

3.1.5 If the percentage compaction at any point is found to be unacceptable, additional compaction with or without modification of the field moisture content as directed shall be performed and additional moisture-density determinations made. This procedure shall be repeated until satisfactory compaction is obtained.

3.1.6 The Contractor will cooperate with the testing laboratory in obtaining field samples of in-place materials after compaction. Also incidental field labor and equipment necessary to dig and backfill test holes shall be furnished by the Contractor.

4.1 Payment.

4.1.1 All payment for initial testing of concrete, trench backfill, roadway bases and embankment compaction and other like materials as specified and directed by the Engineer will be made by the Owner to the Contractor based on and in the amount of submitted invoices from the testing firm. The Contractor shall not be entitled to any mark-up on the submitted invoices.

4.1.2 All additional tests necessitated by the failure of initial tests as determined by the Engineer shall be conducted as directed by the Engineer and all costs incurred from these additional tests shall be borne by the Contractor.

4.1.3 All work performed by the Contractor in connection with this Section shall be considered incidental to other contract items bid.

Pay Items and Units:

629 Testing of Materials Allowance

SECTION 632 -- REFLECTORIZED PAVEMENT MARKINGS

Description

1.1 This work shall consist of furnishing and placing white or yellow reflectorized paint pavement markings, preformed retroreflective pavement markings, and reflectorized thermoplastic pavement markings at the locations shown on the plans or as directed.

Materials

2.1 Paint shall conform to 708-NH 4.11 White Traffic Paint or 708-NH 4.12 Yellow Traffic Paint.

2.2 Glass beads for traffic paints shall conform to 708-NH 4.13.

2.3 Preformed retroreflective pavement marking tape shall conform to 711 Type I or Type II.

2.4 Thermoplastic pavement markings shall be subject to the approval of the Engineer. The Contractor shall submit his proposed materials list and method of application for approval at least two weeks prior to commencing the work, Included in this proposal shall be the manufacturer's warranty of durability, certified by an independent testing laboratory.

Construction Requirements

3.1 General.

3.1.1 All pavement markings of the type specified shall be applied at the locations shown on the plans or as ordered, and shall be in accordance with the Traffic Manual (MUTCD). Traffic control operations in conjunction with placing markings shall conform to 619 and the Traffic Control Plan.

3.1.2 Longitudinal lines placed on tangent roadway segments shall be straight and true. Longitudinal lines placed on curves shall be continuous smoothly curved lines consistent with roadway alignment. All pavement markings placed shall meet the tolerance limits shown on the plans.

3.1.3 Broken lines shall consist of 15 foot line segments with 25 foot gaps and shall meet the tolerance limits shown on the plans.

3.1.4 Unless otherwise specified, widths of longitudinal markings shall be as follows:

Line Type	Width (inches)
Centerlines	4
Edge Lines	4
Lane Lines	4
Gore Markings	8
Cross Walks	6
Parking Lines	4
Stop Bars	12

3.1.5 Newly painted markings shall be protected from traffic until the paint is cured. The method of protection shall not constitute a hazard to the traveling public. Damage to any markings as a result of tracking shall be repaired by the Contractor.

3.1.6 For guidance in marking longitudinal lines, the Engineer will establish base line points at 50 foot intervals on curves and 100 foot intervals on tangent sections throughout the length of pavement to be marked under this section. All other markings shall be applied according to the physical pavement layout provided. The Contractor shall provide at least 7 days notice to the Engineer prior to beginning marking operations to allow for layout.

3.1.7 For resurfacing contracts, the Contractor's attention is directed to the special requirements contained in 619.3.3.

3.2 Reflectorized Paint Pavement Marking.

3.2.1 All equipment used for highway striping shall be specifically designed and manufactured for that purpose by a company experienced in the design and manufacture of such equipment. Equipment used for longitudinal lines shall be truck mounted, and shall have the capability of placing two 4-inch yellow centerlines simultaneously according to the dimensions shown on the plans. The paint shall be applied with an atomizing spray type striping machine. The equipment shall include a mechanical glass bead dispenser mounted not more than 12 inches behind the paint dispenser. All equipment shall be kept in good operating condition.

3.2.2 Immediately before applying the pavement marking paint to the pavement, the Contractor shall insure the surface is dry and entirely free from dirt, sand, grease, oil, or other foreign matter.

3.2.3 The surface temperature of the pavement shall be a minimum of 40 degrees F.

3.2.4 Paint shall be applied at the following rates for the widths of line specified:

Width of Line (inches)	Linear Feet of Solid Line per Gallon of Paint	Linear Feet of Broken per Gallon of Paint
4	300 - 350	1200 - 1400
6	200 - 230	800 - 920
8	150 - 175	
12	100 - 120	

NOTE: Application rates for widths not shown shall be in direct proportion to those specified above.

3.2.5 Glass beads shall be evenly applied through the entire paint thickness at a rate of 6 pounds to each gallon of paint. Glass beads shall be applied by pressurized methods for fast-dry paint and by pressurized or mechanical drop methods for regular-dry paint.

3.2.6 All clean up and disposal of solvents, residue, and the like shall be the responsibility of the Contractor and shall be performed in accordance with all applicable federal, state, and local regulations.

3.3 Preformed Retroreflective Pavement Marking Tape.

3.3.1 Preformed retroreflective pavement marking tape shall be applied at locations shown on the plans by mechanical or manual methods. Mechanical applications shall be suitable for all markings. Manual applications shall normally be used for transverse lines, symbols and legends. The manufacturer shall provide technical assistance for equipment operation and maintenance, and product applications.

3.3.2 Preformed retroreflective pavement marking tape shall be stored and applied as directed by the manufacturer. When not specified, application by either the inlay or overlay method will be permitted. When the inlay method is specified, or chosen by the Contractor, paving and marking operations shall be coordinated to meet the manufacturer's recommendations.

3.3.2.1 For the inlay method, the pavement markings shall be embedded in the pavement surface with a conventional steel wheel roller. The surface temperature of the pavement shall be within the range specified by the manufacturer and shall not deform or discolor the markings.

3.3.2.2 When applying pavement markings by the overlay method, the pavement surface shall be clean, dry and above the minimum temperature as specified by the manufacturer. The surface shall be broomed clean and all dust shall be removed using compressed air. When required by the manufacturer, a coat of primer/adhesive activator shall be
applied.

3.3.3 The Contractor shall provide a copy of the manufacturer's storage and application recommendation to the Engineer upon delivery of the material to the project.

3.3.4 The required quantity of preformed retroreflective pavement marking tape shall be available at the project prior to the start of applicable pavement operations.

3.4 Reflectorized Thermoplastic Pavement Markings.

3.4.1 Thermoplastic pavement markings may be used as an option to preformed retroreflective pavement marking tape, but shall only be used for lane lines, arrows, legends, crosswalks, railroad markings, or stop lines. Thermoplastic material shall not be used for edge lines or center lines, unless specifically authorized.

3.4.2 Thermoplastic materials used as an option to preformed retroreflective pavement marking tape shall be applied according to the manufacturer's recommendations.

Method of Measurement

4.1 Longitudinal reflectorized pavement markings will be measured by the linear foot, on the surface of the markings, for the type and width specified.

4.1.1 Broken lines will be measured including gaps between line segments.

4.2 Reflectorized pavement arrows, with or without word, and other symbols or legends of the type specified will be measured by the number of units applied.

4.3 Repair work ordered under 3.1.5 will not be measured.

Basis of Payment

5.1 The accepted quantities of longitudinal reflectorized pavement markings of the type specified will be paid for at the contract unit price per linear foot complete in place.

5.2 The accepted quantities of reflectorized pavement arrows, with or without word, and other symbols or legends of the type specified will be paid at the contract unit price per each complete in place.

5.3 No payment will be made for those units of pavement markings which do not conform to the requirements of this section.

5.4 Thermoplastic markings applied as provided in 3.4.1 will be paid under the appropriate items for Preformed Retroreflective Pavement Marking Tape or Arrows, Type I.

KEY TO ITEM NUMBERS FOR PAVEMENT MARKINGS

Item Number

632. A B C D Item number
632. Section number
A Material
B Type of marking
C D Arrow type or width of line

.A Material
.0 Reflectorized Paint
.1 Preformed Retroreflective Tape, 60 mil, Type I
.2 Preformed Retroreflective Tape, 25 mil, Type II

B Type of Marking
1 Single Solid Line
2 Single Broken Line
3 Double Solid Line
4 Double Broken Line
5 Double Line (Solid with Broken)
6 Arrow
7 Railroad
8 Single Legend

C D	Arrow Type or Width of line	
0 1	Single Arrow	Each
0 2	Double Arrow	Each
0 3	Single Arrow, with Word	Each
0 4	4 Inch Line	Linear Foot
0 6	6 Inch Line	Linear Foot
0 8	8 Inch Line	Linear Foot
1 2	12 Inch Line	Linear Foot

Examples:

632.0104 Reflectorized Paint Pavement Marking 4", Solid Line
632.1303 Preformed Retroreflective Pavement Arrows, Single, with Word, 60 mil, Type I
632.2106 Preformed Retroreflective Pavement Marking Tape, 25 mil, Type II, 6" Solid Line

SECTION 641 -- LOAM

Description

1.1 This work shall consist of collecting and preparing loam material encountered in the work or obtained from other sources and placing the material at the locations shown on the plans or ordered, including necessary excavation for placing loam.

Materials

2.1 Loam shall consist of loose friable topsoil with no admixture of refuse or material toxic to plant growth. Loam shall be free from stones, lumps, stumps or similar objects larger than 3/4 inches in greatest diameter, subsoil, roots and weeds. The term as used herein shall mean that portion of the soil profile defined technically as the "A" horizon by the Soil Science Society of America. The minimum and maximum pH value shall be from 5.5 to 7.6. Loam shall be tested in conformance with the Standards of the Association of Official Agricultural Chemists. Loam shall contain a minimum of 3 percent and a maximum of 20 percent of organic matter as determined by loss by ignition. Not more than 65 percent shall pass a No.#200 sieve as determined by the wash test in accordance with ASTM D1140. In no instance shall more than 20% of the material passing the No. 4 sieve consist of clay size particles. Prior to stripping material to be used as loam, it shall have demonstrated by the occurrence upon it of healthy crops, grass or other plant growth, that it is of good quality and reasonably free draining.

2.1.1 Natural topsoil not conforming to 2.1 shall be treated by the Contractor to meet that specification.

Construction Requirements

3.1 The loam shall be spread upon the previously prepared surface and shall be raked carefully to remove all objectionable materials. Normally, loam for roadside use shall be placed at a depth of 4 inches. Loam placed adjacent to lawns or where directed, shall be compacted with a roller weighing approximately 100 pounds per foot of roller width. All depressions exposed during the rolling shall be filled with additional loam.

Method Of Measurement

4.1 Loam will be measured by the square yard as determined by actual surface measurements of the lengths and widths of the loamed areas.

Basis of Payment

5.1 The accepted quantities of loam of the various depths specified will be paid for at the contract unit price per square yard complete in place, except that when the item of borrow is included in the contract, no deduction will be made from borrow for the

volume of loam obtained from sectioned areas; the quantity of loam provided from nonsectioned areas will be added to borrow.

5.2 Materials used for treating natural topsoil as in 2.1.1 will be subsidiary.

Pay Items and Units:

641.0	Loam 4 Inches Deep	Square Yard

SECTION 642 -- LIMESTONE

Description

1.1 This work shall consist of furnishing and applying limestone on areas shown on the plans or ordered.

Materials

2.1 Limestone shall be a calcic or dolomitic ground agricultural limestone containing not less than 95 percent of either calcium or magnesium carbonate or both. It shall conform to the standards of the Association of Official Agricultural Chemists and shall comply with all existing State and Federal regulations.

2.1.1 Sieve Analysis. A minimum of 40 percent shall pass a No. 100 sieve and a minimum of 95 percent shall pass a No. 8 sieve.

2.1.2 Packaging. Limestone shall be furnished in new, clean, sealed and properly labeled bags of not more than 100 pounds each with the following information clearly marked thereon:

(a) Manufacturer's name
(b) Type
(c) Weight
(d) Guaranteed analysis.

2.1.2.1 Caked or otherwise damaged limestone may be rejected.

2.2 Other Liming Materials may be used, if permitted.

Construction Requirements

3.1 Limestone shall be used when ordered, to raise the pH of the soil at a rate determined by the Engineer, in accordance with Table 642-1.

Table 642-1

Limestone Required to Raise Soil pH to Min. (pH 5.5)

Existing PH	Tons/Acre	lbs./C.Y.
4.0 - 4.4	3	12
4.5 - 4.9	2	8
5.0 - 5.4	1	4

3.2 Limestone shall be applied by either the dry or hydraulic methods specified in 644.3.5.

Method Of Measurement

4.1 Limestone will be measured by the ton in accordance with 109.01, on the basis of delivery slips forwarded to the Engineer but not to exceed the rate ordered. Measurements will be made to the nearest 0.01 of a ton.

Basis Of Payment

5.1 The accepted quantity of limestone will be paid for at the contract unit price per ton complete in place.

Pay Item and Unit:

642	Limestone	Ton

SECTION 643 -- FERTILIZER FOR GRASSES

Description

1.1 This work shall consist of furnishing and applying an initial application of fertilizer on a new surface and one or more refertilizations after the growth has progressed sufficiently, all as shown on the plans or ordered.

Materials

2.1 Fertilizer shall be a standard commercial grade fertilizer conforming to all State and Federal regulations and to the standards of the Association of Official Agricultural Chemists. The analysis shall represent respective percentages of nitrogen, phosphoric acid and potash.

2.1.1 Except as permitted, the analysis ratio shall be 1:1:1 for initial application and 3:1:2 for refertilization application. The analyses in Table 1 are preferred. Permission to furnish fertilizer with an analysis varying from Table 643-1 will be based upon reasons given in writing by the Contractor requesting such variance.

Table 643-1
Fertilizer Information

Analysis Initial Refertilization	Minimum Application Rate (Lbs./1,000 S.F.)	Measurement Factor
10-10-10	20.0	1.0
15-15-15	13.4	1.5
10-3-6	20.0	1.0
12-2-8	16.7	1.2
12-4-8	16.7	1.2

2.1.2 A minimum of 30 percent of the nitrogen in fertilizer used for refertilization shall be water insoluble (WIN).

2.2 All fertilizer shall be identified by labels and shall show the following:

(a) Guaranteed analysis.
(b) Name and address of the guarantor of the fertilizer.
(c) Type or brand.
(d) Net weight.

2.2.1 When furnished as a liquid, the fertilizer shall be delivered in an appropriate container or vehicle and shall conform to the pertinent sections of the Fertilizer Rules and Regulations issued by the New Hampshire Department of Agriculture.

Construction Requirements

3.1 Fertilizer shall be uniformly applied by either the dry or hydraulic method specified in 644.3.5. When the dry method is used, special care shall be taken to thoroughly work the fertilizer into the soil.

3.1.1 The rate of application shall be based upon the nitrogen content and shall be a rate between 2.0 and 2.2 pounds of nitrogen per 1,000 square feet. See Table 1 for further information.

3.2 Unless otherwise ordered not less than 3 months shall elapse between the initial fertilization and the refertilization. No refertilization ordinarily will be allowed between November 1st or when the ground has frozen and the following April 1st or between June 1 and the following September 1. Refertilization will be allowed between August 15 and 31 only when it is determined that the permanent grasses have developed well and few weeds have appeared and such refertilization will not tend to promote the growth of noxious weeds.

Method Of Measurement

4.1 Fertilizer will be measured by the pound or by the ton and in accordance with 109.01 on the basis of weight slips or delivery slips forwarded to the Engineer, but not to exceed the maximum rate specified or ordered. Measurements by the ton will be made to the nearest 0.01 of a ton.

4.1.1 The quantity for payment will be the product of the accepted quantity used and the appropriate measurement factor from Table 1.

Basis Of Payment

5.1 The accepted quantity of fertilizer will be paid for at the contract unit price per pound or per ton complete in place.

Pay Items and Units:

643.11	Fertilizer for Initial Application	Pound
643.12	Fertilizer for Initial Application	Ton
643.21	Fertilizer for Refertilization	Pound
643.22	Fertilizer for Refertilization	Ton

SECTION 644 -- GRASS SEED

Description

1.1 This work shall consist of furnishing and sowing grass seed as shown on the plans or as ordered.

Materials

2.1 General.

2.1.1 Grass seed shall meet the requirements of the New Hampshire Agricultural and Vegetable Seeds Law. As specified in the law, the mixture shall include no "primary noxious weed seeds".

2.1.2 Grass seed of the specified mixtures shall be furnished in fully labeled, standard sealed containers.

2.1.3 Percent germination and purity of each seed type in the mixture and weed seed content of the mixture shall be clearly stated on the label.

2.1.4 Seed shall be subject to the testing provisions of the Association of Official Seed Analysts. The month and year of test shall be clearly stated on the label.

2.1.5 Seed may be tested after it has been delivered to the project.

2.1.6 Seed which has become wet, moldy or otherwise damaged will not be acceptable.

2.2 Park Seed Type 15 shall normally be used on loam areas. This seed mixture shall conform to Table 644-1.

Table 644-1 -- Park Seed, Type 15

Kind Of Seed	Minimum Purity (%)	Minimum Germination (%)	Lbs/Acre
Creeping Red Fescue	96	85	40
Perennial Ryegrass (a)	98	90	50
Kentucky Bluegrass (b)	97	85	25
Redtop	95	80	5
Total:			120

2.3 Slope Seed, Type 44 shall normally be used for all slope work and shall conform to Table 644-2 unless amended by the Engineer to suit special local conditions encountered.

Table 644-2 -- Slope Seed, Type 44

Kind Of Seed	Minimum Purity (%)	Minimum Germination (%)	Lbs/Acre
Creeping Red Fescue(c)	96	85	35
Perennial Ryegrass (a)	98	90	30
Redtop	95	80	5
Alsike Clover	97	90 (e)	5
Birdsfoot Trefoil (d)	98	80 (e)	5
Total:			80

(a) - Ryegrass shall be a certified fine-textured variety such as Pennfine, Fiesta, Yorktown, Diplomat or equal.

(b) - Bluegrass shall be a certified variety such as Merion, Baron, Majestic Touchdown, Nugget, Ram One or equal.

(c) - Fescue varieties shall include: creeping red and/or Hard Reliant, Scaldis, Koket or Jamestown.

(d) - (Empire variety preferred) Inoculum specified to Birdsfoot Trefoil, must be used with this mixture. The inoculum shall be a pure culture of nitrogen-fixing bacteria selected for maximum vitality and the ability to transform nitrogen from the air into soluble nitrates and to deposit them in the soil. The inoculum shall not be used later than the date specified. The inoculum shall be subject to approval.

(e) - Includes not more than 10 percent hard seed for
Alsike Clover and not more than 25 percent hard seed for Birdsfoot Trefoil. If necessary, to meet this requirement, extra seed shall be supplied at no expense to the City.

2.4 Crownvetch (Chemung, pengift and Emerald variety preferred) shall be used at the rate of 10 pounds per acre with or without Slope Seed, Type 44 on all slopes designated on the plans to be seeded with Crownvetch or as ordered. Generally, Crownvetch will be required on steep slopes, usually 3:1 or steeper and on other critical areas of poor soil conditions with susceptibility to erosion forces.

2.4.1 Inoculum specific to Crownvetch must be used with this seed. In all other respects it shall conform to note (d) in Table 2.

2.4.2 Crownvetch seed shall have a minimum 35 percent normal sprouts and 35 percent hard seed. If necessary to meet this requirement, extra seed shall be supplied at no expense to the City.

Construction Requirements

3.1 General.

3.1.1 In order to prevent unnecessary erosion of newly graded slopes and unnecessary siltation of drainage ways, the Contractor shall carry out erosion control items of work such as seeding and mulching as soon as he has satisfactorily completed a unit or portion of the project.

3.1.2 When immediate protection of newly graded areas is necessary at a time which is outside of the normal seeding season, hay mulch shall be applied in accordance with 645.3.1.1 with the seeding done at the same time or done later or both, as ordered.

3.1.2.1 When immediate seeding is required on areas of the roadside which are not to be regraded or disturbed, one of the above specified seed mixtures shall be used as ordered.

3.1.2.2 Areas of the roadside which are to be left temporarily and which will be regraded or otherwise disturbed later during construction may be ordered to be seeded with ryegrass under 645.5.2 to obtain temporary control. Ryegrass shall be spread at the rate of approximately 1 pound per 1,000 square feet.

3.1.3 The Engineer reserves the right to prohibit the use of any equipment that is unsuitable or inadequate for the proper performance of the work. The Contractor must immediately remove all rejected equipment from the project.

3.1.4 When the seed mixture requires an innoculum, the innoculum shall be kept as cool as possible, at all times below 75 degrees F until used. Inoculated seed shall be protected from exposure to sunlight prior to sowing and all seed not sown within 24 hours following inoculation, shall be properly reinnoculated.

3.1.4.1 When grass seed is to be sown dry and the specific legume seed such as Birdsfoot Trefoil or Crownvetch requiring inoculation is furnished on the project separately from the balance of the seed mixture, the legume seed shall be inoculated using twice the normal quantity recommended by the supplier, and regardless of the directions by the supplier, the seed shall be treated with a sticking agent to hold the innoculum to the seeds, and then treated with a drying agent. The sticking agent shall consist of a mixture such as 9:1 solution of water and molasses which shall be thoroughly mixed with the seed at the rate of 1/2 pint per 100 pounds of seed, unless a greater rate is recommended by the supplier. Before mixing the treated seed with the remainder of the seed mixture, a drying agent such as
cornstarch shall be added at the rate of approximately 1/2 pound per 100 pounds of seed, unless another rate is specified.

3.1.4.2 When grass seed is to be sown dry and the legume seed is furnished on the project already mixed with the remainder of the seed mixture, 3 times the normal quantity of innoculant recommended by the supplier as sufficient for the quantity of legume in the mixture shall be mixed with the total seed. The sticking agent and the drying agent shall be mixed in the manner and at the rate specified in 3.1.4.1 with sufficient agents to treat the entire mixture.

3.1.4.3 When the seed is to be applied by the use of a hydraulic seeder, at least 4 times the normal amount of the appropriate innoculum required to inoculate only the legume, shall be added to the mixture just before application. See 3.5.2.7.

3.2 Seeding Seasons.

3.2.1 Seeding and initial fertilizing shall be done between April 1 and June 1, between August 15 and October 24, or as directed or permitted. Seeding shall not be done during windy weather or when the ground is frozen, excessively wet or otherwise untillable.

3.3 Application Rates. Unless specifically ordered, seed shall be spread at the rates specified in 2.2, 2.3 and 2.4.

3.4 Preparation.

3.4.1 All areas to be seeded shall be prepared to provide a reasonably firm but friable seed bed.

3.4.1.1 Sloped areas shall not be left too smooth; the surface shall be left in a ruffled condition such as may be produced by the use of tracked vehicles run up and down the slopes. Smooth compacted slopes such as may be left from blading, which might allow the free flow of water down them shall be disked, harrowed, dragged with a chain or mat, machine-raked or hand worked as directed to give the effect of miniature terraces, particularly in silty or clayey soils. The slopes shall however; be left smooth enough to enable the Contractor or the State to mow them later, if necessary.

3.4.1.2 Lawn areas such as where loam has been spread shall be prepared for seeding in accordance with 641.3.1.

3.4.2 Depth of tillage shall be shown on the plans or ordered.

3.4.2.1 On slopes steeper than 4:1, the depth of tillage may be reduced as directed.

3.4.3 All areas to be seeded shall meet the specified grades and shall be free of growth and debris.

3.4.4 Care shall be taken to prevent the formation of low places and pockets where water will stand.

3.4.5 Where ryegrass has been planted for temporary erosion control and has not been eliminated prior to the completion of the work, such areas shall be disked at least 3 inches deep and seeded to permanent grasses to prevent the ryegrass from reseeding and becoming competitive with and retarding development of the permanent cover.

3.5 Seeding Methods. Fertilizer, limestone and mulch material if required and seed of the type specified may be placed at the locations shown or ordered by one of the following methods, provided an even distribution is obtained.

3.5.1 Dry Method.

3.5.1.1 Power Equipment. Mechanical seeders, seed drills, landscape seeders, cultipacker seeders, fertilizer spreaders or other approved mechanical seeding equipment or attachments may be used when seed, limestone and fertilizer are to be applied in dry form.

3.5.1.2 Manual Equipment. On areas which are inaccessible to power equipment, permission may be given to use hand-operated mechanical equipment when the materials are to be applied in dry form. The use of hand shovels to spread the materials will not be allowed.

3.5.1.3 When the dry method is used, limestone and fertilizer shall not be mixed together prior to their application, but they shall be worked into the soil together to the depth of at least 1 inch.

3.5.1.4 At least 24 hours shall elapse between the time fertilizer is incorporated and the seed is planted.

3.5.1.5 Loamed areas or areas covered with park seed shall be raked and unless rolling is ordered omitted, shall be rolled with a roller weighing not more than 100 pounds per foot of roller width to firm the soil, but not to pack it. The rolling shall be done the same day as the seeding unless otherwise permitted.

3.5.1.6 Unless otherwise ordered, areas covered with park seed or slope seed with or without crownvetch, shall be mulched in accordance with 645. Private lawns affected by this specification need not be mulched unless it is requested by the landowner.

3.5.2 Hydraulic Method.

3.5.2.1 The application of grass seed, fertilizer, limestone and a suitable wood fiber mulch shall be accomplished in one operation by use of an approved spraying machine.

3.5.2.2 The materials shall be mixed with water in the machine and kept in an agitated state in order that the materials may be uniformly suspended in the water.

3.5.2.3 The spraying equipment shall be so designed that the solution is sprayed over an area, the resulting deposits of limestone, fertilizer and grass seed shall be equal in quantity to the required rates.

3.5.2.4 Prior to the start of work, the Engineer shall be furnished with a certified statement for approval as to the number of pounds of materials to be used per 100 gallons of water. This statement shall also specify the number of square feet of seeding that can be covered with the quantity of solution in the hydroseeder.

3.5.2.5 The hydraulic seeding and fertilizing machine shall be completely flushed and cleaned each day before seeding is to be started and shall also be thoroughly flushed of all residue after the completion of application on every 10 acres.

3.5.2.6 If the results of the spray operations are unsatisfactory, the Contractor will be required to abandon this method and apply the materials in accordance with 3.5.1.

3.5.2.7 When inoculum is required, if the inoculum is left in solution with fertilizer longer than 30 minutes, a fresh charge of inoculum (4 times normal) shall be added to the mixture. See 3.1.4.3.

3.5.2.8 When the hydraulic method is used, compaction or rolling will not be required.

3.5.2.9 Except as provided in 3.1.2, unless mulch material required is applied during the seeding operation or within 1/2 hour following the seeding operation, temporary and satisfactory measures to protect the seed from sunlight and heat shall be taken such as the use of a light brush drag over the seeded areas to stir the seed into the soil. Care shall be taken not to carry the seed ahead.

3.6 Care After Seeding.

3.6.1 The Contractor shall be responsible for protecting and caring for seeded areas until final acceptance of the work. He shall repair at his own expense any damage to seeded areas caused by pedestrian or vehicular traffic or other causes, except for conditions as covered in 107.16.

3.6.2 If necessary, barricades of brush or other materials and suitable signs shall be placed to protect the seeded areas.

3.6.3 The seeded areas shall be carefully and suitably watered as necessary to produce a satisfactory growth.

3.6.4 Areas seeded with Park Seed shall be mowed whenever necessary to keep the growth between 3 inches and 6 inches in order to allow light to penetrate to the shorter, slower growing species in the mixture. Areas seeded with slope seed may be ordered mowed whenever the contract extends into a second growing season.

3.6.5 Weeds growing in areas seeded with the slope seed shall be cut back to prevent them from dominating the desired grass plants.

3.7 Liability.

3.7.1 The Contractor shall keep all seeded areas in good repair.

3.7.2 To be acceptable, a stand of grass shall show a reasonably thick, uniform stand free from sizeable areas of thin or bare spots with a uniform count of at least 100 plants of specified grass per square foot. When applicable, at least three Birdsfoot Trefoil plants and one crownvetch plant per square foot must be visible with the other specified grasses.

3.7.3 Any part of seeded areas which fail to show a uniform stand shall be reseeded until all areas are covered with grass.

Method Of Measurement

4.1 Grass seed shall be measured by the pound based upon the delivery slips and tags furnished by the Engineer, but not to exceed the rate specified or ordered.

Basis Of Payment

5.1 The accepted quantity of grass seed will be paid for at the contract unit price per pound of the type specified complete in place.

5.1.1 Seeded areas which need reseeding will be done at the Contractor's expense.

5.2 Hay mulch will be paid for under 645.101 or 645.11.

5.3 Limestone will be paid for under 642.

5.4 Fertilizer will be paid for under 643.

5.5 Ryegrass will be paid for under 645.52.

Pay Items and Units:

644.15	Park Seed, Type 15	Pound
644.44	Slope Seed, Type 44	Pound
644.51	Birdsfoot Trefoil	Pound
644.6	Crownvetch Seed	Pound

SECTION 645 - EROSION CONTROL

Description

1.1 Permanent Control. This work shall consist of furnishing and placing mulch or matting on surfaces prepared and seeded under other items at locations shown on the plans or ordered.

1.2 Temporary Control. When the use of hay bales is ordered, this work shall consist of furnishing and placing hay bales as a temporary erosion and pollution control device at locations shown on the plans or ordered. When seeding is ordered, this work shall consist of sowing seed of the type ordered on the areas as directed.

Materials

2.1 Mulch shall consist of cured hay, free from weeds and rough or woody materials.

2.1.1 Bark mulch shall be bark chippings graded to be approximately 3/8 inches to 2 inches in width. The chippings shall not have been stored so long and under such conditions that the material has decomposed sufficiently so that it has lost its fibrous texture. Bark mulch must be approved as to grading and condition prior to its use.

2.2 Matting for Erosion Control shall conform to one of the following provisions:

2.2.1 Jute Mat shall be of open weave, single jute yard averaging 130 pounds per spindle of 14,400 yards. The yarn shall be of loosely twisted construction, not varying in thickness by more than 1/2 its normal diameter. The woven material shall be 48 inches wide plus or minus 1 inch and with approximately 78 warp ends per width of cloth and 41 weft ends per linear yard. The woven material shall weigh 1.22 pounds per linear yard with a tolerance of plus or minus 5 percent.

2.2.2 Excelsior Mat shall be wood excelsior, at least 35 inches in width, weighing 0.8 pounds per square yard plus or minus 5 percent. The excelsior material shall be covered with a netting on one side to facilitate handling and to increase strength.

2.2.3 Other Types of Matting shall be those accepted by the Engineer as equal in effectiveness to one of those specified above.

2.3 Staples shall be of No. 11 (or heavier) plain iron wire, made from lengths of at least 12 inches each.

2.4 Seed for Erosion Control shall be one of the following:

(a) Seed for temporary control shall be annual or

perennial ryegrass.

(b) Seed for a more permanent control shall be slope seed, Type 44, as set forth in 644.2.3.

2.5 Hay Bales for Erosion Control shall consist of rectangular shaped bales of hay or straw weighing at least 40 pounds per bale. They shall be free from primary noxious weed seeds and rough or woody materials.

Construction Requirements

3.1 Mulch.

3.1.1 Mulching shall be done immediately after each area has been properly prepared. When seed for erosion control is sown prior to placing the mulch, the mulch shall be placed on the seeded areas within 48 hours after seeding. Hay that has been thoroughly fluffed, shall be applied at approximately but not to exceed 3 tons per acre unless ordered. Blowing chopped mulch will be permitted when authorized. Authorization will be given when it can be determined that the mulch fibers will be of such length and applied in such a manner there will be a minimum amount of matting that would retard the growth of plants. Hay mulch should cover the ground enough to shade it, but the mulch should not be so thick that a person standing, cannot see ground through the mulch. Matted mulch or bunches shall be removed or otherwise taken care of.

3.1.2 In order to prevent its being blown away after the mulch has been spread to the required depth, a light covering of loose branches, a system of pegs and strings or other approved method shall be employed. Unless otherwise ordered, such means of control shall be removed prior to the acceptance of the project.

3.1.3 All baling wire or rope such as that used in the shipment of mulch, shall be disposed of outside the limits of the project in approved areas.

3.1.4 Bark mulch shall be placed on the designated areas to the depth specified

3.2 Matting.

3.2.1 Surfaces of ditches and slopes to receive matting shall conform to the grades and cross sections shown on the plans and shall be finished to a smooth and even condition with all debris, roots, stones and lumps raked out and removed. The soil surface shall be sufficiently loose to permit bedding of the matting. Unless otherwise directed, seed ordered shall be applied prior to placement of the matting.

3.2.2 Jute. Strips of jute matting shall be placed lengthwise in the direction of the flow of water. Where strips are laid parallel or meet as in a tee, they shall overlap at least 4 inches. Ends shall overlap at least 6 inches, shingle fashion. In addition, the up-slope end of each strip of the matting shall be turned down and buried to a depth of not less than 6 inches with the soil firmly tamped against it. The Engineer may require that any other edge exposed to more than normal flow of water be buried in a similar manner.

3.2.2.1 Check slots built at right angles to the direction of the flow of water shall be spaced so that one check slot or one end occurs within each 50 feet of length of slope. Check slots shall be constructed by placing a tight fold of the matting at least 6 inches vertically into the ground. These shall be tamped the same as the up-slope ends.

3.2.2.2 Edges of matting shall be similarly buried around the edges of catch basins and other structures.

3.2.3 Excelsior. When excelsior matting is being laid, the material shall be unrolled in the direction of the flow of water.

3.2.3.1 Where strips of excelsior matting are laid end to end, the adjoining ends shall be butted.

3.2.3.2 When adjoining rolls of excelsior matting are laid parallel to one another, the matting shall be butted snugly.

3.2.4 Except where jute matting is turned down, all matting shall be spread evenly and smoothly so that it is in close contact with the ground. Bulging seams in either matting material shall be cut out and joints formed as described above. When ordered, additional seed shall be spread over jute matting, particularly at those locations disturbed by building the slots. Jute matting shall then be pressed onto the ground with a light lawn roller or by other satisfactory means.

3.2.5 Matting shall be held tightly to the soil by staples driven approximately vertically into the ground flush with the surface of the matting. On slopes flatter than 4:1, staples shall be spaced not more than 3 feet apart in three rows for each strip, with one row along each edge and one row alternately spaced, down the center. On grades 4:1 or steeper, staples shall be placed in the same three rows, but spaced 2 feet apart. On all overlapping or butting edges, the number of staples shall be doubled with the spacing halved; all ends of the matting and all required check slots, shall likewise have staples spaced every foot. The matting placed adjacent to boulders or other obstructions, shall be stapled with no spaces between the staples, to eliminate any loose edges of matting.

3.2.5.1 The above specified spacing of staples may be changed as ordered, depending upon varying factors such as the season of the year or the amount of water encountered or anticipated.

3.2.5.2 In driving the staples, care shall be taken so as not to form depressions or bulges in the surface of the matting.

3.2.6 Other Matting. Approved, alternate matting shall be applied in accordance with the recommendations of the manufacturer and as directed.

3.3 Seed for Erosion Control.

3.3.1 Seeding when required, shall be performed as ordered and in accordance with 644.3.

3.3.1.1 Areas of the roadside which are to be left temporarily and which will be re-graded or otherwise disturbed later during construction may be ordered to be seeded with ryegrass to obtain temporary control. The seed shall be sown at the rate of approximately 1 pound per 1,000 square feet.

3.4 Maintenance.

3.4.1 If any staples become loosened or raised or if any matting becomes loose, torn or undermined, satisfactory repairs shall be made immediately.

3.4.2 The Contractor shall maintain areas mulched or matted, with no extra compensation until the completion of the contract.

3.4.2.1 On areas treated with bark mulch, the Contractor shall remove unsightly weeds and plant material as directed.

3.5 Hay Bales for Erosion Control. Hay bales shall be placed as ordered to provide for temporary control of erosion or pollution or both. They shall be staked with the required stakes. Upon acceptance of the contract, the bales shall be left in place unless released to the Contractor.

Method Of Measurement

4.1 Mulch will be measured by the square yard or by the acre. When measurements are made by the acre, such measurements will be made to the nearest 0.01 of an acre.

4.2 Matting will be measured by the square yard, based on dimensions of the matting prior to installation. Areas buried or ordered overlapped will not be deducted.

4.3 Grass seed will be measured by the pound, as specified in 644.4.1.

4.4 Hay bales for erosion control will be measured by the number of bales required.

Basis Of Payment

5.1 The accepted quantities of erosion control work will be paid for at the contract unit price per square yard or per acre for mulch and per square yard for matting, all complete in place.

5.2 Slope seed, Type 44 ordered for erosion control will be paid for under 644.44; the accepted quantity of ryegrass ordered for temporary erosion control will be paid for at the contract unit price per pound complete in place.

5.3 Hay bales for erosion control will be paid for at the contract unit price per bale complete in place. No extra payment will be made for removal of bales ordered removed.

Pay Items and Units:

645.101	Mulch	S.Y.
645.11	Mulch	Acre
645.15___	Bark Mulch __Inches Deep	S.Y.
645.2	Matting for Erosion Control	S.Y.
645.51	Hay Bales for Temporary Erosion Control	Each
645.52	Ryegrass for Temporary Erosion Control	Pound

SECTION 646 -- TURF ESTABLISHMENT

Description

1.1 This work shall consist of preparing the soil and furnishing and applying seed of the type or types specified, fertilizer, limestone, and mulch if required, on all areas designated for turf establishment as shown on the plans or ordered.

Materials

2.1 Limestone shall conform to 642.2.

2.2 Fertilizer shall be that for initial fertilization and shall conform to 643.2.

2.3 Seed shall conform to 644.2 using the type of mixture ordered.

2.4 Mulch shall conform to 645.2.1.

2.5 Mulch tackifiers shall be environmentally non-toxic.

Construction Requirements

3.1 Construction requirements shall conform to 643.3, 644.3 and 645.3.

3.2 Application rate of limestone shall generally be 130 pounds per 1,000 square feet (approximately 3 tons per acre), unless otherwise ordered.

3.3 When mulch tackifiers are ordered to be used as tie- down or adhesive for mulch, it shall be used at the rate specified by the manufacturer, and applied uniformly over and through the mulch.

Method of Measurement

4.1 Turf establishment will be measured by the acre or by the square yard. Computations will be made to the nearest 0.01 of an acre or the nearest 0.1 square yard from measurements taken on the actual ground surface covered.

Basis of Payment

5.1 The accepted quantities of turf establishment will be paid for at the contract unit price per acre or square yard complete in place.

5.2 The material cost of crownvetch seed ordered added to Slope Seed Type 44 will be paid for under extra work.

Pay Items and Units:

646.1	Turf Establishment with Mulch	Acre
646.2	Turf Establishment without Mulch	Acre
646.3	Turf Establishment with Mulch & Tackifiers	Acre
646.4	Turf Establishment with Mulch	S.Y.
646.5	Turf Establishment without Mulch	S.Y.
646.6	Turf Establishment with Mulch & Tackifiers	S.Y.

SECTION 647 -- HUMUS

Description

1.1 This work shall consist of salvaging humus material encountered in the work or furnishing humus material from other sources, and placing the material at the locations shown on the plans or ordered.

Materials

2.1 Humus shall be the surface layer of natural workable soil containing organic matter, or material of a generally humus nature capable of sustaining the growth of vegetation, with no admixtures or refuse or material toxic to plant growth. It shall be relatively free from stones, lumps, stumps or similar objects larger than 2 inches in greatest diameter, sterile soil, roots, and brush. Ordinary sods of herbaceous growth such as grass and non-noxious weeds will be permitted. Muck, dry enough to be properly measured and spread may be used if it meets the above requirements, but the Engineer reserves the right to prohibit the use of muck which he considers may be or may become a fire hazard. If muck is accepted, extra limestone, sand, or humus material, shall be added as ordered by the Engineer.

Construction Requirements

3.1 The material shall be spread over the properly prepared areas to give a covering which will be approximately 3-1/2 inches thick, with generally not less than 3 inches or more than 4 inches, measured normal to the slope.

Method of Measurement

4.1 Humus material will be measured by the cubic yard. Slope measurements will be taken of the lengths and widths of the material in place and the volume will be computed by using the nominal depth of 3-1/2 inches.

Basis of Payment

5.1 The accepted quantity of humus will be paid for at the contract unit price per cubic yard complete in place.

5.1.1 Excavation required to undercut slopes in order to accommodate the material will be subsidiary.

5.1.2 When the item of borrow is included in the contract, no deduction will be made from borrow for the volume of humus obtained from sectioned areas; the quantity of humus provided from nonsectioned areas will be added to borrow.

Pay Item and Unit:

647.1	Humus	Cubic Yard

SECTION 648 -- SOD

Description

1.1 This works shall consist of furnishing and placing live grass sod, including sod gutters, as shown on the plans or ordered. This work shall also include any excavation necessary to place the sod.

Materials

2.1 Sod shall consist of an approved, dense, vigorous, well-rooted growth of commercial turf of perennial grasses indigenous to the area where it is to be used.

2.1.1 The sod shall be free from noxious weeds, annual grasses, large stones or roots, or other materials harmful to growth, or which would interfere with mowing or future maintenance.

2.1.2 The soil shall be of such character that the sod will not break or crumble.

2.2 Pegs for holding shall be of sound wood approximately 3/4" square or round, and 8' to 10" long.

Construction Requirements

3.1 Sodding seasons. Unless otherwise permitted, sodding shall be done between April 1 and June 1, or between August 15 and October 15, but not when the ground or sod is frozen.

3.2 Cutting sod. The sod shall be cut with an approved sod cutter into strips of uniform width having minimum dimensions of 12" x 18". The sod shall be severed below the root line, shall have a uniform thickness and shall contain the majority of the feeding roots of grasses.

3.3 Site Preparation

3.3.1 Areas to be sodded shall be brought to grade with 4" of loam as shown or ordered, making allowance for the thickness of the sod.

3.3.2 As necessary, the soil shall be harrowed, tilled, or otherwise loosened to a depth of at least 2 inches to allow for mixing of the soil with the fertilizer and limestone.

3.3.3 The area shall be cleaned of large stones, roots, or other debris which might interfere with laying of the sod.

3.4 Laying Sod.

3.4.1 Sod shall be in a moist condition when laid and shall be placed on a reasonably moist bed. The sod shall be carefully placed and tightly fitted edge to edge. Any broken, damaged, or irregular shaped sod will be rejected.

3.4.2 On slopes, the sod shall be laid at right angles to slope, beginning at the bottom.

3.4.3 Transverse joints shall be staggered, and any unavoidable gaps shall be filled with sod plugs or loam.

3.4.4 All sod shall be tamped with an approved tamper or roller to insure tight joints and a smooth uniform surface.

3.4.5 The inlet edges of sod in waterways and other edges exposed to water scour shall be turned down and buried to a depth of 3 inches with tamped earth.

3.4.6 On slopes steeper than 4:1, every other line of sod shall be fastened with wooden pegs spaced 3 feet apart and driven flush with the surface of the sod.

3.4.7 Single lines of sod for anchoring loam on slopes greater than 4:1 shall be secured as 3.4.6.

3.4.8 After laying, all sod shall be watered as necessary to insure full establishment and growth.

Method of Measurement

4.1 Sod will be measured along the slope, except that the width of gutters will be as shown on the plans or ordered. Dead sod will not be measured. Sod will be computed to the square yard.

Basis of Payment

5.1 The accepted quantity of sod will be paid for at the contract unit price per square yard complete in place.

5.2 Excavation required to complete this work will be considered as incidental to the items, but fertilizer, limestone, and loam ordered will be paid for under the respective items.

Pay Item and Unit:

648	Sod	Square Yard

SECTION 650 -- PLANTING -- GENERAL

Description

1.1 This specification includes general requirements that are applicable to all types of planting, including trees, shrubs, vines and ground cover plants, irrespective of type. Deviations from these general requirements will be indicated in the specific requirements for each type.

Materials

2.1 Plants.

2.1.1 General.

2.1.1.1 Plant material shall meet the current specifications of the "American Standard for Nursery Stock" as published by the American Association of Nurserymen unless otherwise specified.

2.1.1.2 All plants shall be first class and shall be representative of their normal species of varieties. All plants must have a good, healthy, well formed upper growth and a large, fibrous, compact root system.

2.1.1.3 All plants shall be nursery grown stock that has been transplanted unless indicated as "seedlings", or root pruned at least once every 4 years. Plant hardiness shall be determined acceptable by the Engineer as specified relative to the zone of origin. A sworn affidavit as to region of growth shall be furnished when ordered.

2.1.1.4 Unless otherwise specified, so-called exposed or "bare-root" material will be accepted. Container grown plants may be furnished in lieu of balled and burlapped plants, provided they meet the current specifications in the American Standard for Nursery Stock.

2.1.2 Names and Marking.

2.1.2.1 All scientific and common plant names of the items specified shall conform with the current edition of "Hortus Third" compiled by the staff of the L.H. Bailey Hortorium, Cornell University. All plants delivered shall be true to name.

2.1.2.2 Each bundle, or each plant when not tied in bundles, shall be legibly and properly labeled. Care shall be taken throughout the operation to keep each plant species or variety segregated and labeled.

2.1.3 Inspection

2.1.3.1 All plants shall be free from plant diseases and insect pests, and shall comply with all applicable State and Federal laws with respect to inspection for plant diseases and infestations.

2.1.3.2 All plant material shall be available for inspection in the nursery or collecting fields before it is dug. The Contractor shall provide a list of suppliers in sufficient time to allow the Engineer to inspect nurseries on a timely bases. Approval to move nursery material shall not be considered as final acceptance. The Contractor shall notify the Engineer not less than 48 hours in advance of delivery of plants.

2.1.3.3 All planting stock shall conform to the laws of New Hampshire and shall be inspected before removal from the nursery, by authorized Federal, State, City or other authorities as may be required in the area where the nursery is located. The invoice or order for each shipment of plants shall contain the project name and number and the quantity and variety of plant material delivered. An inspection certificate shall certify that the plants are free of disease and insect pests of all kinds and shall accompany each shipment. Disease certificates and delivery slips shall be given to the Engineer upon arrival of the plant material at the point of delivery.

2.1.3.4 For purchase of material from nurseries within New Hampshire, information regarding inspection for plant disease and pest infestations is available from the New Hampshire Department of Agriculture. Inspection of plants from outside New Hampshire is controlled by the United States Department of Agriculture and information is available from the United States Department of Agriculture, Animal & Plant Health Inspection Service.

2.1.4 Digging, Handling, and Packing.

2.1.4.1 General. Plants shall be dug with care and skill. Special precautions shall be taken to avoid any unnecessary injury to, or removal of fibrous roots. Each species or variety shall be handled and packed in the approved manner for that particular plant. All precautions shall be taken to insure the arrival of the plants at the project site in good condition for successful growth.

2.1.4.2 Balled and burlapped plants. The ball shall be firm and, unless a manufactured ball is allowed, shall be composed of the original and undisturbed soil in which the plant has been grown. The plant shall be handled in such a manner that the soil in the ball will not drop away from the roots and will not cause stripping of the small, fine-feeding
roots. The ball shall be wrapped with burlap or other approved material and tightly laced to hold the desired shape. No balled plants will be accepted if the ball is cracked or broken. A substitute for burlap may be approved provided it can be demonstrated that the material is tight enough to retain the soil ball securely. During planting operations material which will not readily disintegrate in the ground shall invariably be removed or extensively cut to allow the roots to grow through freely.

2.1.4.3 Bare-root plants. The roots of bare-rooted stock shall be carefully packed in sphagnum moss, moist straw, or other suitable material that will insure the arrival of plants in an acceptable condition.

2.1.5 Shipment.

2.1.5.1 Arrangements shall be made as far as practical be to have plants delivered as the pits or beds are ready for them.

2.1.5.2 Plants which have heated or sweated at any time, or have broken, fractured, scraped or bruised, will be rejected.

2.1.5.3 All local, state or federal laws relative to the shipping of plants shall be strictly complied with.

2.1.6 Measurement.

2.1.6.1 Measurement will be made in accordance with the practice prescribed in the "American Standard for Nursery Stock" published by the current American Association of Nurserymen.

2.2 Blank.

2.3 Blank.

2.4 Wrapping material shall be an approved type either plain burlap or paper, or plastic manufactured for this purpose. Burlap shall be of good quality, approximately 6 inches wide, weighing at least 8 ounces per square yard. Paper shall be 4 inch wide strips of krinkle-craft, sisal kraft or equal.

2.4.1 Fastening for the wrapping material shall be paper adhesive masking tape or a minimum 3-ply jute twine of suitable strength.

2.4.2 All deciduous trees shall be wrapped promptly after planting to prevent sun-scald, frost crack and rodent damage. No trees shall be wrapped before the plant material is inspected by the Engineer.

2.5 Plant supporting materials shall conform to those shown on the plans.

2.6 Rodenticides, herbicides and pesticides shall be those approved for use by the New Hampshire Pesticides Control Board.

2.7 Water used in the planting or care of vegetation shall be free from any substance injurious to plant life.

2.8 Antidesiccants shall be of an approved emulsion which will provide a film over plant surfaces, permeable enough to permit the exchange of gases but inhibit the passage of water vapor.

2.9 Fertilizer.

2.9.1 Fertilizer shall be a standard commercial grade fertilizer conforming to all State and Federal regulations and to the standards of the Association of Official Agricultural Chemists. The analysis shall represent respective percentages of nitrogen, phosophoric acid and potash.

2.9.1.1 All fertilizer shall be identified by labels and shall show the following:

(a) Guaranteed analysis.
(b) Name and address of the guarantor of the fertilizer.
(c) Type or brand.
(d) Net weight.

2.9.1.2 Dry fertilizer for other than acid-loving plants shall have an analysis of 10-6-4 (preferred), 10-3-6 or 10-5-5 or, with written permission, a substitute may be furnished. In any case, a minimum of 35 percent of the nitrogen shall be water-insoluble (35 percent WIN).

2.9.1.3 Water-soluble fertilizer shall be completely water soluble. Fertilizer for other than for acid-loving plants shall contain the following minimum percentages of available elements by weight: nitrogen -- 16 percent, phosphoric acid -- 19 percent, potash -- 16 percent. The total available nutrients shall be at least 55 percent by weight.

2.9.1.4 Fertilizer for acid-loving plants shall be formulated for acid-loving plants such as rhododendrons, azaleas and blueberries. Dry fertilizer for such plants shall have a minimum analysis of 7-7-7 or as approved. Water- soluble fertilizer for such plants shall have an analysis in the range of 21-7-7 or as approved.

2.10 SOIL CONDITIONERS

2.10.1 Peat moss shall be air dried, granulated, sphagnum peat moss, nearly from woody substances, consisting of at least 75 percent of partially decomposed stems and leaves of sphagnum, and essentially brown in color. The texture may vary from porous fibrous to spongy fibrous and shall be free of sticks, stones, and mineral matter. Peat moss shall not show an acid reaction of less than 3.5 pH.

2.10.2 Peat humus shall be natural peat or peat humus from fresh water saturated areas, consisting of sedge, sphagnum, orreed peat, and shall be such physical condition that it will pass through a 1/2-inch mesh screen. The humus shall be free of sticks, stones, roots, and other objectionable materials. Samples taken at the source of supply shall meet the following requirements:

Acidity:	Not less than 4.0 pH.
Minimum water absorbing ability:	200 percent by weight on oven-dry basis.
Minimum organic content:	60 percent when dried at 105 degrees C.

2.1.10.2.1 Freshly excavated peat, if saturated with water, shall be stored for a sufficient length of time to condition it for workability.

2.10.3 Humus material other than peat humus shall conform to 647.2.

2.11 MULCHES

2.11.1 Wood chips shall be obtained primarily from disease -free green hardwood, shall be 1/4 inch in nominal thickness, and 50 percent shall have an area of not less than one square inch nor more than six square inches. Not more than 2 percent shall consist of leaves, twigs, or shavings, and it shall be free of materials injurious to plant growth. Wood chip mulch must be approved prior to use. Where wood chips are specified, bark may only be used when permitted.

2.11.2 Bark mulch shall be bark chippings graded to be approximately 3/8 inches to 2 inches in width. The chippings shall not have been stored so long and under such conditions that the material has decomposed sufficiently so that it has lost its fibrous texture. Bark mulch must be approved as to grading and condition prior to its use. Where bark mulch is specified, wood chips may only be used when permitted.

2.11.3 Other mulch material may be used upon approval.

2.12 Loam Backfill.

2.12.1 Loam backfill shall be relatively free of roots or rhizomes of witchgrass. No sticks, sods, clods or other material which would tend to form large air pockets in the soil shall be included. The use of muck will not be permitted around any plantings.

2.12.2 Loam backfill shall have minimum and maximum pH values of 6.0 and 7.6. Organic matter, as determined by loss by ignition shall be from 6 percent to 20 percent. Natural topsoil with a pH over 4.5 and over 4 percent organic may be amended to meet these specifications.

2.12.3 A loam source will be sampled and tested by the Engineer so that the results are obtained at least three days prior to planting and prior to the addition of soil amendments. Planting shall not begin prior to loam approval.

2.12.4 After the test results are known, amendments shall be made, when necessary, to meet the minimum pH and organic standards.

2.12.5 To each cubic yard of accepted loam, the following shall be added and thoroughly mixed to produce loam backfill: 2 to 3 cubic feet of well rotted cow manure (dehydrated cow manure at a rate specified by the Engineer); 4 cubic feet of sphagnum peat moss; 15 pounds of 10-6-4 fertilizer minimum 50 percent water insoluble (WIN); and 20 pounds of ground agricultural limestone.

2.12.5.1 When permitted, individual components of the loam backfill may be added directly to the approved plant pits.

2.12.5.2 Batch size for mixing shall be determined by the Engineer, typically 15 cubic yards.

Construction Requirements

3.1 Planting Seasons.

3.1.1 Unless otherwise directed, seasons for planting shall be within the following dates:

Deciduous Material:

Spring - April 1 to June 15
Fall - September 15 to November 15

Evergreen Material:

Spring - April 1 to May 31
Fall - August 15 to October 30

3.1.2 Preparations for planting may begin earlier than the specified season, and if approved, planting work may continue beyond the specified time limits. However, the Engineer may require that all plants planted out of season, except deciduous material planted prior to April 1 and after
November 15, shall be balled, burlapped and pruned.

3.1.3 No planting shall be done when the site or weather is unsatisfactory for planting, unless permitted.

3.2 Delivery and Inspection.

3.2.1 A preliminary check will be made of all plants at the time of delivery fro condition of the plants and general conformity to the specifications. A more thorough inspection of individual plants will be made just prior to planting. No plants shall be planted which have not received this inspection. In order to facilitate this inspection, the Contractor shall inform the Engineer, at least 24 hours in advance, as to what plants are to be planted and in what location. Any plants which are planted without receive in this inspection will be rejected and, if rejected must be removed and replaced with inspected stock.

3.2.2 Due to the difficulty of identifying dormant plants and to the effect to of handling on the health and vigor of plants, only conditional approval will be given to plants in preliminary and intermediate inspections. Inspection will continue throughout the life of the contract up to the time of final acceptance. Plants discovered at any time which are not true to name, do not conform to the specifications, show evidence of improper handling or lack of proper care, or which appear to be in a seriously unhealthy condition for any other reason must be removed from the project site at once and replaced by acceptable plants as soon as the planting season allows.

3.2.3 At least 3 days before digging any collected or plantation-grown material, the Contractor shall notify the Engineer of the time and place of digging so that inspection of the work and of the material can be made by the Engineer.

3.3 Protection and Temporary Storage.

3.3.1 The Contractor shall keep all plant material moist and protected from drying out. Protection shall be provided during the time the plants are in transit, in temporary storage, or on the project site awaiting planting.

3.3.2 Unless otherwise approved by the Engineer, plants delivered, but not scheduled for immediate planting, shall be protected as follows:

(a) Bare-root plants shall be heeled-in in moist soil in a satisfactory manner. All plants heeled-in shall be properly maintained by the Contractor until planted.

(b) Balled and burlapped plants shall have the earth balls covered with wood chips or other suitable material and shall be kept in a moist condition.

3.3.3 The Contractor shall exercise the utmost care in loading, unloading or handling of plants to prevent injuries to the branches or to the roots of the plants. The solidity of balled and burlapped plants shall be carefully preserved.

3.3.4 While plants with exposed roots are being transported to and from heeled-in beds, or are being distributed in planting beds, or are awaiting planting after distribution, the Contractor shall protect the roots from drying out by means of wet canvas, burlap or straw, and watering, if necessary. The means employed shall be satisfactory and shall depend on weather conditions and the length of time the roots must remain out of the ground.

3.3.5 Stock left out of the ground unprotected overnight or left with roots exposed to the sun, or otherwise unprotected during transit, unloading, heeling-in or planting will be rejected.

3.4 Layout.

3.4.1 The Engineer may adjust plant material locations to meet field conditions. Plant material locations and bed outlines shall be staked on the project site by the Engineer with the assistance of one contractor employee. Stakes or other approved markers shall be furnished by the Contractor upon request of the Engineer.

3.4.2 Prior to the start of active work on the project, the Contractor shall provide a planting sequence schedule to be used in establishing priorities in laying out plant locations. The Contractor shall give at least 2 days advance notice of any deviations from this schedule. The Engineer will not be responsible for any delay or inconvenience resulting from the Contractor's failure to follow the above procedure.

3.4.3 An artificial appearance in the layout scheme is generally not desired. Except where uniform spacing may be required, as i the case of snow-control planting and the like, some variation in spacing is essential and care must be taken to avoid straight lines and uniform spacing.

3.5 Excavation.

3.5.1 Excavation for plant pits shall not begin before the approved loam backfill is available on the project.

3.5.2 Holes for plant material shall be excavated at the indicated locations and shall be of sufficient size to permit not less than 6 inches of loam backfill beneath and 12 inches around the outer periphery of the root system or ball. Plant pit sizes are shown on the planting detail sheet.

3.5.2.1 Trenching may be ordered for special sites such as long narrow medians. Trenches shall provide a minimum 12 inches of loam backfill beneath and around the outer edge of the plant ball.

3.5.3 When ordered, the soil at the bottom of the plant pit shall be loosened to a depth of at least 6 inches by spading or other approved methods before beginning to backfill each plant pit.

3.5.4 Surplus excavated material or material unsuitable for backfill or saucer construction shall be removed from the site as soon as practicable or disposed of as ordered.

3.5.5 When rock or boulders over 1/3 cubic yard in size are encountered in digging plant pits, the Contractor shall notify the Engineer, who will change the location of the plants. No excavation of rock or boulders over 1/3 cubic yard in volume will be required.

3.5.6 If topsoil on the planting site is acceptable as loam, the topsoil encountered in the excavation may be used for loam backfill when it is kept separate from the subsoil. Soil amendments may be required. See 2.12.4.

3.5.7 In certain areas of poor drainage or heavy soil, the Engineer may require that the soil excavated from the plant pit be spread on the ground adjacent to the pit and neatly distributed so as to raise the grade of the area to provide better surface drainage. Where shown on the plans or directed, such pits may also require ditches. When ditches are required, they shall be included as a part of the cost of the plant. Beds constructed by trench method must be raised sufficiently to permit drainage to flow alongside and into the bed.

3.5.8 Where permitted, bare-root evergreens such as seedlings or transplants may be planted in the existing soil. Plant holes must be deep enough to allow room for the full depth of the root without doubling, folding, or pruning, and wide enough to allow room for its normal spread. Plants must be set straight and at the same depth at which they were previously growing. Soil must be firmly compacted about the roots, leaving no air pockets. In heavy grass the Engineer may require that the sod be removed or folded back to a

distance of 4 to 6 inches from the main stem of each plant, or require herbicide treatment in advance of planting.

3.6 Setting Plants.

3.6.1 General.

3.6.1.1 Plants shall be set to depths appropriate to the various types of material, local drainage and the special requirements of each. In general, plants shall be placed on backfill that has been firmly settled so that the root crown is even with or slightly higher than the ground level. Roses and budded or g rafted plants shall be set at least 3 inches below their previous earth line or as directed.

3.6.1.2 All trees and shrubs shall be planted plumb.

3.6.1.3 As shown on the planting detail sheets, the ground around the plants shall be graded and rims shall be constructed at the edge of the plant pit for each plant, forming a saucer capable of holding sufficient water to give the root system a good soaking. Saucer rims shall be tamped so as to be durable enough to allow several years of watering if necessary. To prevent the growth of weeds and noxious grasses, the rims shall be constructed from soil removed from the plant pits. Imported loam for backfill shall not be used in the construction of the plant saucer rims and every effort shall be made to prevent spillage of loam in the planting area.

3.6.2 Planting and Backfilling Bare-Root Plants.

3.6.2.1 Prepared backfill soil shall be placed in the plant pit to required minimum depth and very slightly tamped. Plants shall then be placed in the center of the pit and roots properly spread out in a natural position. All broken or damaged roots shall be cleanly cut back to sound root growth.

3.6.2.2 Backfill soil shall then be carefully worked around and over the roots, with thorough watering. Care shall be taken to avoid the bruising or breaking of roots.

3.6.3 Planting and Backfilling Balled and Burlapped Plants.

3.6.3.1 Plants of this type shall be handled and placed in holes in such a manner that they soil of the ball will not be loosened. After the hole has been partly backfilled and the soil watered under and around the ball, the burlap and ties shall be cut away or loosened to avoid girdling, and the remaing in burlap adjusted to prevent the formation of air pockets. Backfilling and watering shall then be completed in a manner to avoid loosening the soil of the root ball.

3.6.4 Planting and Backfilling Potted Plants.

3.6.4.1 All containers shall be carefully removed prior to planting. Pot-bound material shall be subject to rejection if proper root pruning cannot be accomplished in a manner acceptable to the Engineer.

3.7 Fertilizing.

3.7.1 Initial fertilization shall consist of the use of dry fertilizer, water-soluble fertilizer or a combination of both as permitted.

3.7.1.1 Dry fertilizer, when not included in the loam backfill, including fertilizer for acid-loving plants as appropriate, shall be uniformly mixed with the loam used as backfill about the plants at the following rates:

(a) Trees: 1-1/2 pounds per inch of caliper.
(b) Shrubs: 1/4 pound per foot of height.
(c) Vines: 1/2 pound per vine.

3.7.1.2 Water-soluble fertilizer, when ordered by the Engineer, including fertilizer for acid-loving plants as appropriate, shall be dissolved in water at the rate recommended by the manufacturer. The thoroughly mixed solution shall be applied at the time of initial planting after the water used for backfill soaking has leached away. Care shall be taken to prevent washing plant saucers away either during the original watering or while applying water- soluble fertilizer.

3.7.1.2.1 The fertilizer solution shall be applied at the following rates:

(a) Seedling plants, except coniferous: 1 pint per plant.
(b) Plants up to 2 feet in height shall receive 4 quarts.
(c) Plants over 2 feet and up to 6 feet shall receive 6 quarts.
(d) Plants over 6 feet and up to 12 feet shall receive 12 quarts.
(e) Plants over 12 feet shall receive 16 quarts.

3.7.2 Refertilization.

3.7.2.1 Unless otherwise ordered, up to two refertilizations shall be done using a water-soluble fertilizer applied in conjunction with watering or by itself. No refertilization will be allowed between August 1 and plant dormancy and between frozen ground and April 1.

3.7.2.2 All plants except seedlings and root plantings shall be fertilized at least once between April 1 and August 1 with water-soluble fertilizer mixed and applied in accordance with 3.7.1.2 or as directed when applied with a watering. Dry fertilizer for acid-loving plants may be used for such plants provided it is dissolved insufficient water to make a workable solution and the solution is applied around the outside drip line of the branches at the rate of 1/4 pound per foot of height of shrub.

3.7.2.3 When the contract period extends spring to spring, all plants except seedlings and root cutting shall receive an additional application of fertilizer in the spring prior to final acceptance.

3.8 Watering.

3.8.1 The plants shall be watered immediately following planting, preferably when two-thirds of the backfill has been placed so all air pockets are removed and the plant properly set. A later soaking will be made after the saucers are constructed. Additional waterings shall be made at least once every three weeks unless otherwise directed until final acceptance of the contract.

3.9 Guying and Staking.

3.9.1 All trees shall be guyed in a taut manner or firmly staked in accordance with the details shown on the plans as soon as the plant is in place. Anchor stakes shall not protrude more than 8 inches above the ground. Where ordered, three support posts may be required instead of guys and stakes.

3.10 Antidesiccant Spray.

3.10.1 Antidesiccant spray shall be used when directed.

3.11 Pruning.

3.11.1 Pruning shall be done preferably before or immediately after planting in such a manner as to preserve the natural character of each plant. All pruning shall be done by experienced personnel with properly conditioned equipment and in keeping with accepted horticultural practice. Unless otherwise directed, all deciduous plants shall have 1/3 to 1/2 of the potential leaf bearing surface removed.

3.12 Mulching.

3.12.1 Within 48 hours of planting a plant, unless a longer period is allowed, mulch material shall be furnished and placed over all pit or saucer areas of individual trees, shrubs and vines, and over the entire area of shrub beds to the depth indicated on the plans. Mulch material shall either be bark mulch or wood chips. Saucers shall be inspected prior to placement of mulch or chips.

3.13 Restoration and Cleanup.

3.13.1 Where existing grass areas have been damaged or scarred during planting operations, the disturbed areas shall
be restored to their original conditions as directed at no additional cost to the Department. Mowing may be required when directed by the Engineer to insure complete slope restoration. All debris, spoil piles, containers and the like shall be cleaned up and the project

left in an acceptable condition after each planting season. All slopes shall be left in a smooth condition with ruts and excavate soils removed and areas regraded as required.

3.13 Restoration and Cleanup.

3.13.1 Where existing grass areas have been damaged or scarred during planting operations, the disturbed areas shall be restored to their original conditions as directed at no additional cost to the Department. Mowing may be required when direct by the Engineer to insure complete slope restoration. All debris, spoil piles, containers and the like shall be cleaned up and the project left in an acceptable condition after each planting season. All slopes shall be left in a smooth condition with ruts and excavated soils removed and areas regraded as required.

3.14 Establishment Period.

3.14.1 The acceptability of the plant material furnished and planted as specified will be determined at the end of the establishment period. The period of establishment shall begin as soon as all plants are planted and shall extend for 1 year or until the date of final acceptance, whichever date is later. During the period, the Contractor shall employ all possible means to preserve the plantings in a healthy condition including: watering, weeding, pesticide application, pruning, repairing saucers and adding mulch, adjusting guys and stakes, replacement of unacceptable plants, together with such other work as may be ordered. Weeding shall be a minimum of 1 foot beyond the limit of the saucers.

3.14.2 An inspection will be made by the Contractor and the Engineer immediately prior to or early in the planting season following the original planting season to determine the condition of the plant material. Dead plants, diseased plants, plants lacking sufficient vigor, or plants showing evidence of sizable die-back will require replacements. Unacceptable plant material must be removed promptly from the project.

3.14.3 The Engineer may require that replacement plants that are not dormant or that are planted late in the planting season shall be sprayed as directed with an approved antidesiccant.

3.14.4 Except as provided in 2.1.1.5, all replacement plantings shall be of the same kind and size as originally
specified. The use of more loam and more initial fertilizer may be waived by the Engineer; otherwise, replacement plantings shall be handled, planted and maintained in the same manner specified for the original plantings.

3.15 Herbicides, Insecticides and Fungicides.

3.15.1 The Engineer may order, or the Contractor may request, the use of an approved herbicide at planting locations when it is determined that the chemical control of weeds is necessary.

3.15.2 The Engineer may order, or the Contractor may request the use of a suitable insecticide or fungicide when it is determined that infestations of insects or plant disease require the use of such material.

3.15.3 All herbicides, insecticides and fungicides shall be applied as prescribed by their manufacturer and in accordance with New Hampshire laws. The Contractor shall either possess from the New Hampshire Pesiticide Control Board the proper registrations and permits for the application of such materials or have the applications made by an approved, qualified firm holding such registrations and permits. Copies of all permits in connection with such materials shall be furnished to the Engineer. All pesticide application within the right-of-way will require a special permit from the New Hampshire Pesticide Control Board.

3.16 Protection Against Rodents.

3.16.1 Rodent protection is a required part of plant care during the life of the contract. Unless otherwise permitted, after planted trees have been inspected, single stemmed deciduous trees shall be promptly wrapped for rodent protection using paper, burlap or plastic manufactured for the purpose. Wrapping shall start at the groundline and extend to the first branches. Whether paper, burlap or plastic is used, the wrapping shall be fastened top and bottom at 1 foot above the bottom, and at 18-inch intervals between or as directed. An approved rodenticide shall be used on all other plants that are susceptible to rodent damage. Approval for the proposed rodenticide and for the method of application must be obtained from the New Hampshire Pesticide Control Board and copies of the approval shall be furnished to the Engineer. A mixture of wood alcohol and rosin may be used in the absence of an approved rodenticide at a ratio as determined by the Engineer.

Method of Measurement

4.1 Plant material will be measured by the number of units of plants in healthy condition, of the specified sizes and species, furnished and planted.

Basis of Payment

5.1 All work performed will be paid for as provided under the appropriate Sections 651 through 658 in accordance with the following schedule for partial payments:

(a) Upon approval of all work in connection with initial planting of each specie delivered, including watering, guying, stacking and mulching, 90 percent of the accepted quantity of each specie may be paid.
(b) Upon completion of the replacement of all plant matter so ordered an additional five percent of all species may be paid.
(c) The balance of all acceptable trees not paid previously, will be paid after the final acceptance.

5.2 When substitutions are approved, payment will be by supplementary agreement.

5.2.1 Any non-bid substitution of collected stock as described in 2.1.1.5 will be subject to a price reduction of 25%.

5.3 Excessive damage due to heavy insect infestation, if all reasonable precautions are taken by the Contractor, will be reason for consideration of extra payment for approved replacements.

SECTION 692 -- MOBILIZATION

Description

1.1 This item shall consist of preparatory work and operations, including but not limited to, those necessary to the movement of personnel, equipment, supplies, and incidentals to the site of the work; and for all other work and operations which must be performed or for costs which must be incurred prior to beginning work on the various items.

Method of Measurement

4.1 This item will be measured as a unit for each individual project.

Basis of Payment

5.1 The accepted number of mobilizations shall be paid for at the contract unit price for each. Only one unit of mobilization shall be allowed for each project.

5.1.1 Mobilization will not be paid if the Contractor is moving from one project site to another within the City limits.

Pay item and unit:

692	Mobilization	Unit

SECTION 699 -- TEMPORARY PROJECT WATER POLLUTION CONTROL (SOIL EROSION)

Description

1.1 This work shall consist of temporary control measures as shown on the plans or required during the life of the contract to control water pollution. This work includes but is not necessarily limited to the use of pipes, berms, dams, sediment basins, fiber mats, filter fabrics, netting, erosion control stone, gravel, mulches, grasses, slope drains and other erosion control devices or methods.

1.2 The temporary pollution control provisions contained herein shall be coordinated with the permanent erosion control features specified elsewhere in the contract to the extent practicable to assure economical, effective and continuous erosion control throughout the construction and post construction periods.

1.3 The quantity of work required will depend upon many factors, among which is the amount of soil which may be exposed to erosion. The Contractor's attention is called to the fact that siltation of streams adversely affects the ecology.

Materials

2.1 Mulches may be hay, straw, fiber mats, netting, wood cellulose, bark, chips or other acceptable material and shall be reasonably clean and free of noxious weeds and deleterious materials.

2.2 Slope Drains may be constructed of rigid or flexible pipe, fiber mats, rubble, concrete of bituminous sluices, plastic sheets or other acceptable material that will protect slopes from erosion.

2.3 Grass shall be a quick growing specie suitable to the area, such as rye or cereal grass, providing a temporary cover which will not compete with the grasses subsequently sown for permanent cover.

2.4 Fertilizer and Soil Conditioners shall be an acceptable standard commercial grade.

2.5 Erosion Control Stone shall be as specified for 585.

Construction Requirements

3.1 At the pre-construction conference or prior to the start of the applicable construction, the Contractor shall submit for acceptance a written schedule for accomplishment of temporary and permanent erosion control work for clearing,
grubbing, grading and drainage, especially in or adjacent to existing waters or water courses. This schedule shall include proposed methods of erosion control on haul roads and borrow pits and shall also include plans for disposal of waste materials.

3.1.1 No work shall be started until the erosion control schedule and methods of operation have been approved.

3.2 The Contractor will be required to incorporate all permanent erosion control features into the project at the earliest practicable time, as specified on the plans and as outlined in the approved schedule. Temporary pollution control measures shall be used to correct conditions that develop during construction; that are needed prior to installation of permanent pollution control features; or that are needed to temporarily control erosion not associated with permanent control features.

3.2.1 When erosion is likely to be a problem, grubbing operations shall be so scheduled and performed that grading operations and permanent erosion control features can follow immediately thereafter.

3.3 The Engineer will limit the area of grubbing, excavation, borrow and embankment operations commensurate with the Contractor's capability and progress in keeping the finish grading, mulching, seeding and permanent pollution control measures concurrent with operations in accordance with the accepted schedule.

3.3.1 Under no conditions shall the amount of surface area of erodible earth material exposed at one time by grubbing, excavation, borrow and fill operations within the right-of-way exceed 250,000 square feet without prior approval.

3.3.2 Earth excavation and embankment slopes shall be seed and mulched by or before the time the slant height of exposed untreated slopes reaches 30 feet, or when work in the area is suspended.

3.3.3 As work progresses, patch seeding and mulching shall be done as required on areas previously treated to maintain or establish protective cover.

3.4 Drainage pipes and ditches shall be constructed in a sequence from outlet to inlet in order to stabilize outlet areas and ditches before water is directed to the new installation or any portion thereof unless conditions unique to the location warrant written approval of an alternative method.

3.4.1 Channel and ditch work, including erosion protection items, shall be completed before diversion of the drainage is accomplished unless conditions exist as stated in 3.4. Any temporary relocation of a brook bed shall be properly protected where necessary to prevent erosion pollution.

3.5 In the event of conflict between these requirements and pollution control laws, rules or regulations of Federal, State and local agencies, the more restrictive laws, rules or regulations shall apply.

3.6 Erosion control features shall be maintained by the Contractor throughout the life of the project.

Method of Measurement

4.1 Temporary erosion and pollution control work required to be performed not attributed to the Contractor's negligence, carelessness or failure to install controls will be computed either in the same manner as Extra Work or where such work falls within the specifications for a contract item, a computation will be made using the appropriate quantity multiplied by the contract unit price to obtain the proper dollar value to be summarized under this item.

Basis of Payment

5.1 Payment for work authorized under this item will be paid on an allowance basis as computed in 4.1.

5.1.1 Specific costs incurred during the construction and maintenance of temporary erosion control devices associated with water control such as settlement basins, hay bales, channel lining and stone ditches will be included for payment under this item.

5.2 Payment for the following work will not be allowed under this item.

5.2.1 The Contractor shall provide for the temporary diversion of water during pipe construction and for the dewatering, pumping and control of water when necessary. This work will be subsidiary to the pertinent contract items.

5.2.2 Temporary erosion and pollution control measures required due to the Contractor's negligence, carelessness or failure to install permanent controls as a part of the scheduled work shall be required at borrow pits, disposal areas, on-site and off-site haul roads, equipment storage sites and material processing sites shall also be at the Contractor's expense.

5.3 In case of failure on the part of the Contractor to control erosion, pollution, or siltation, the Department
reserves the right to employ outside assistance or to use its own forces to provide the necessary corrective measures. Such incurred direct costs plus project engineering costs will be charged to the Contractor and appropriate deductions made from the Contractor's estimates.

5.4 The Bidder's attention is called to the price inserted in the proposal under this item, which price is the amount the City has set for temporary pollution control measures. This amount, (1) must not be altered by the Bidder on the proposal and (2) must be included to obtain the grand total of the bid.

5.4.1 Payment of the amount set in the proposal will not be on a lump sum basis, but only the dollar value as authorized will be paid.

5.5 When no money is allocated in the proposal under this item, it is anticipated that this work will be of minor significance and will be the responsibility of the Contractor.

Pay item and unit:

699	Temporary Project Water Pollution Control	Allowance

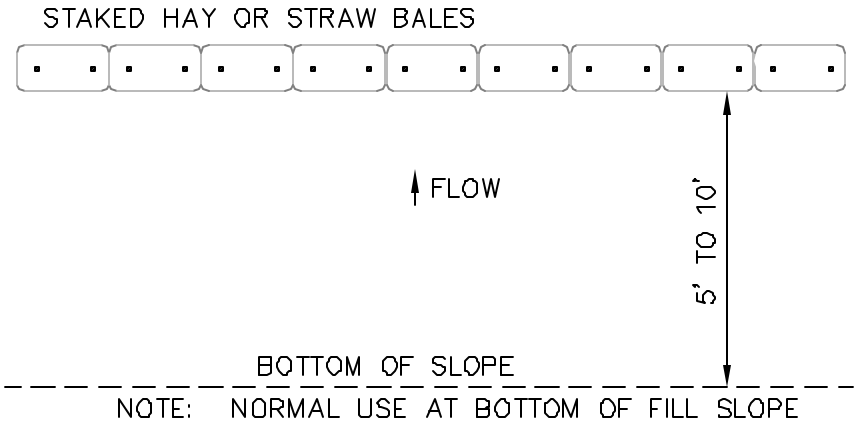

EROSION PROTECTION TYPE 'A'

NOT TO SCALE
FIG. 699–1

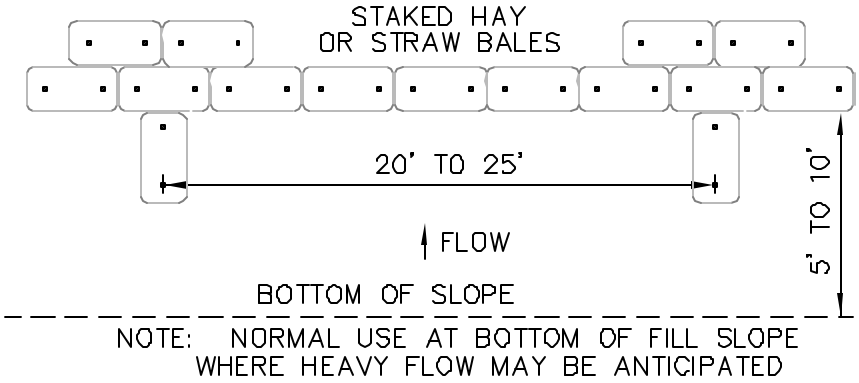

EROSION PROTECTION TYPE 'B'

S:\DWG\DETAILS\699-1 699-2 EROS-A-B

NOT TO SCALE
FIG. 699–2

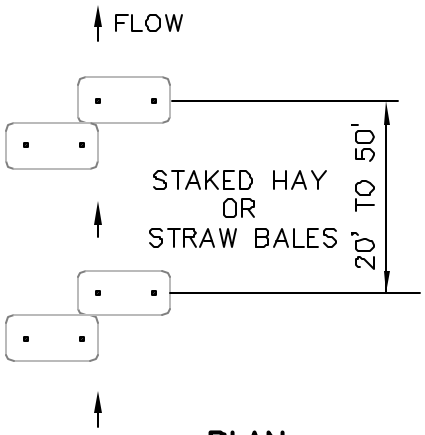

PLAN

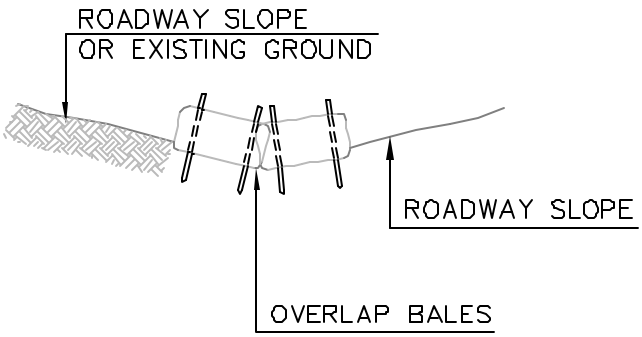

ELEVATION

NOTE: NORMAL USE IN NARROW DITCH SECTION

EROSION PROTECTION TYPE 'C'

S:\DWG\DETAILS\699-3 EROS-C.DWG

NOT TO SCALE

FIG. 699-3

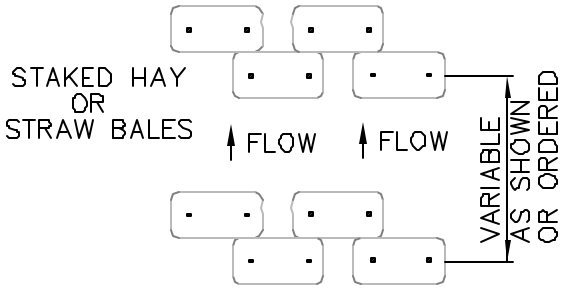

PLAN

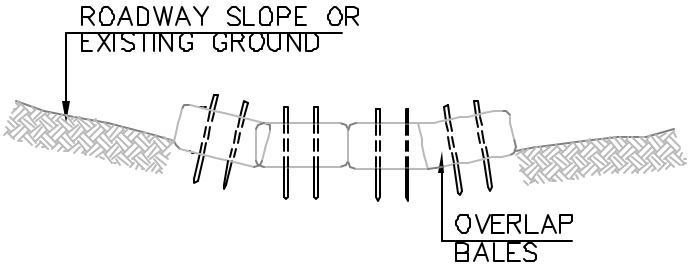

ELEVATION

NOTE: NORMAL USE IN WIDE DITCH SECTION

EROSION PROTECTION TYPE 'D'

S:\DWG\DETAILS\699-4 EROS-D.DWG

NOT TO SCALE

FIG. 699-4

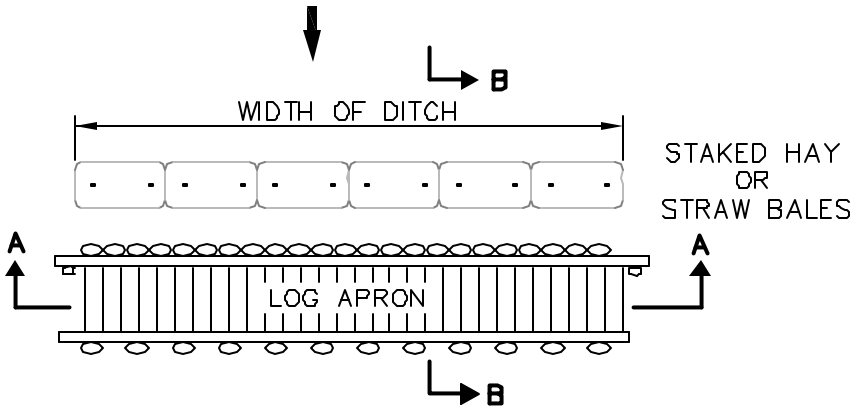

PLAN

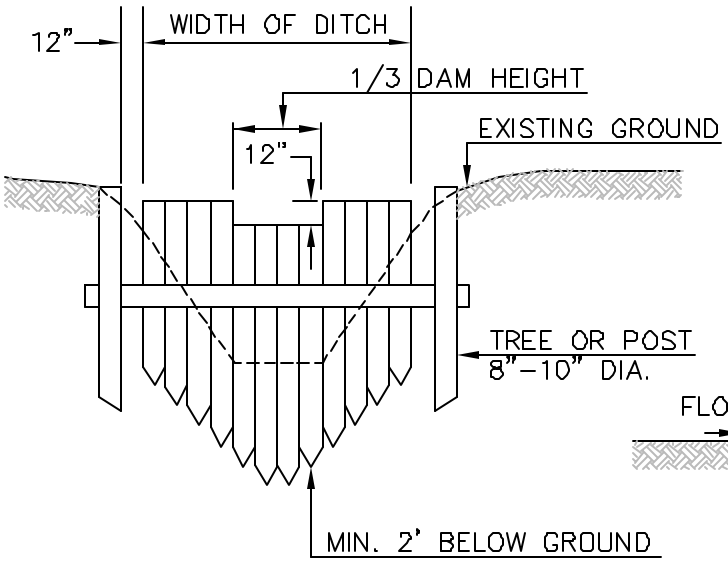

SECTION A–A

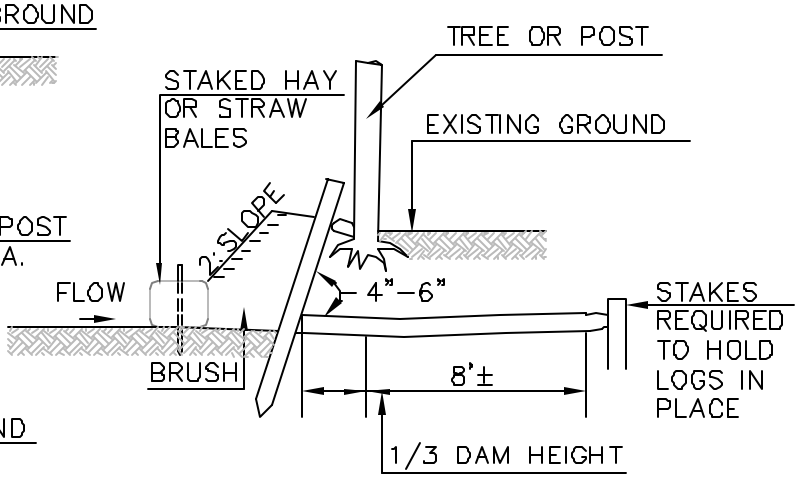

SECTION B–B

ELEVATION

NOTE: NORMAL USE IN, OR JUST UPSTREAM OF WATER COURSE.

EROSION PROTECTION TYPE 'E'

S:\DWG\DETAILS\699-5 EROS-E.DWG

NOT TO SCALE

FIG. 699-5

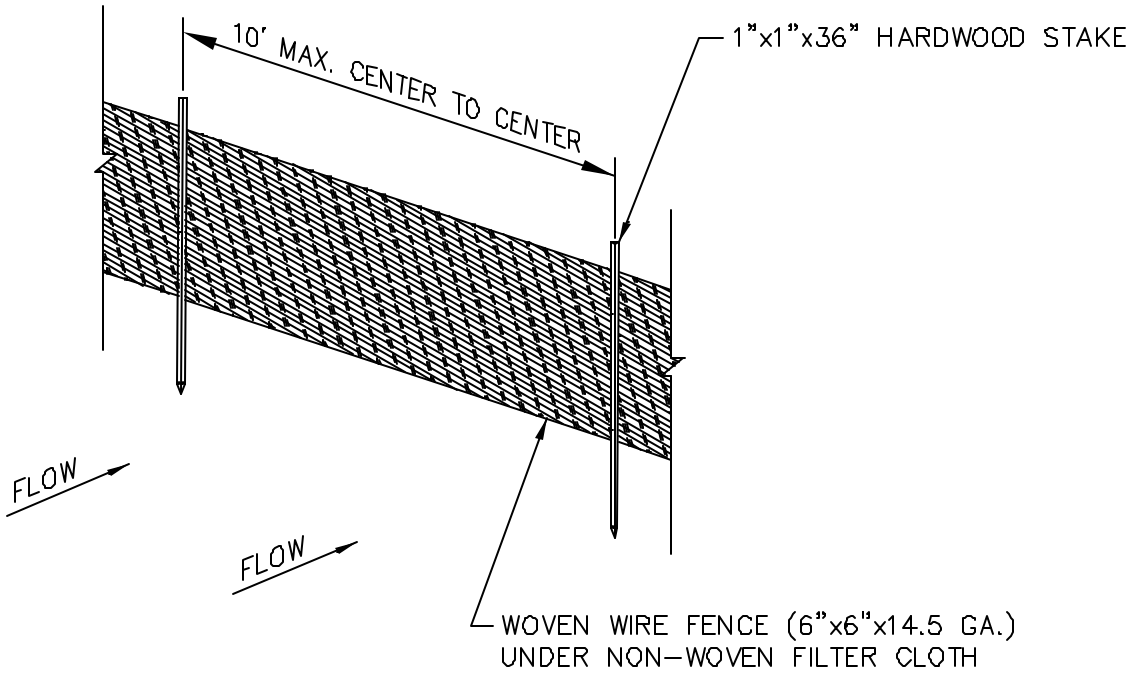

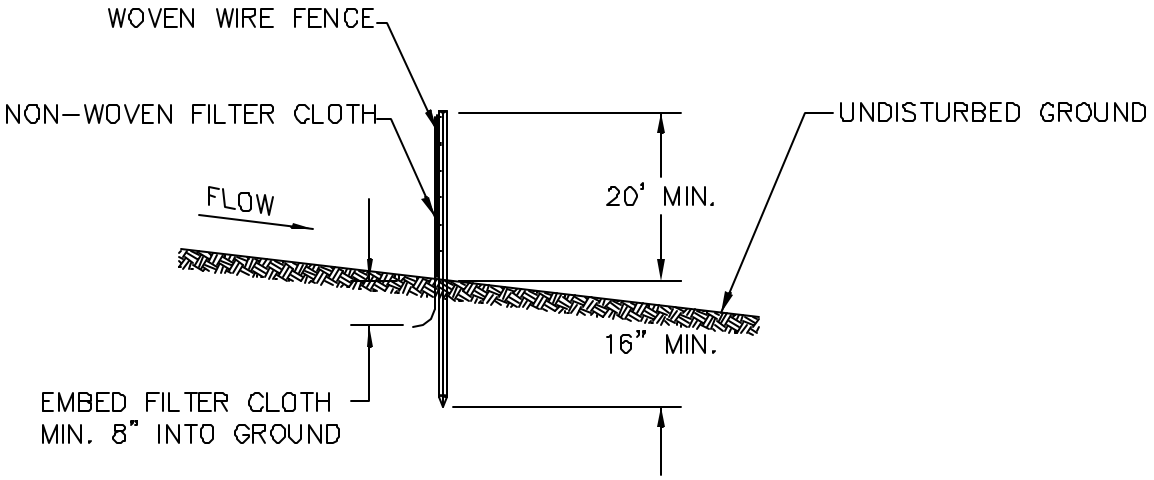

SILT FENCE DETAIL

S:\DWG\DETAILS\699-6 SILTFENC.DWG

NOT TO SCALE

FIG. 699-6

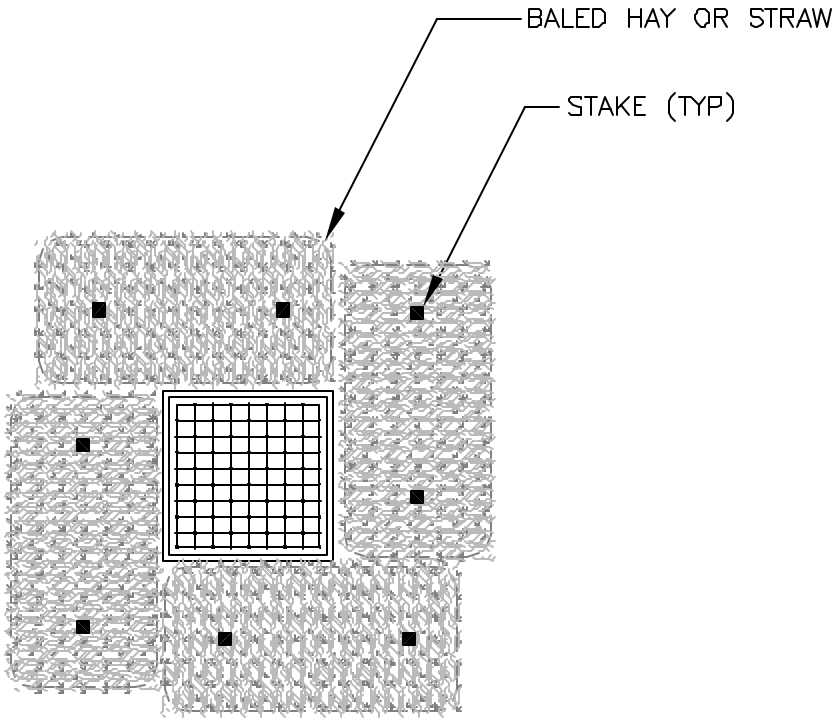

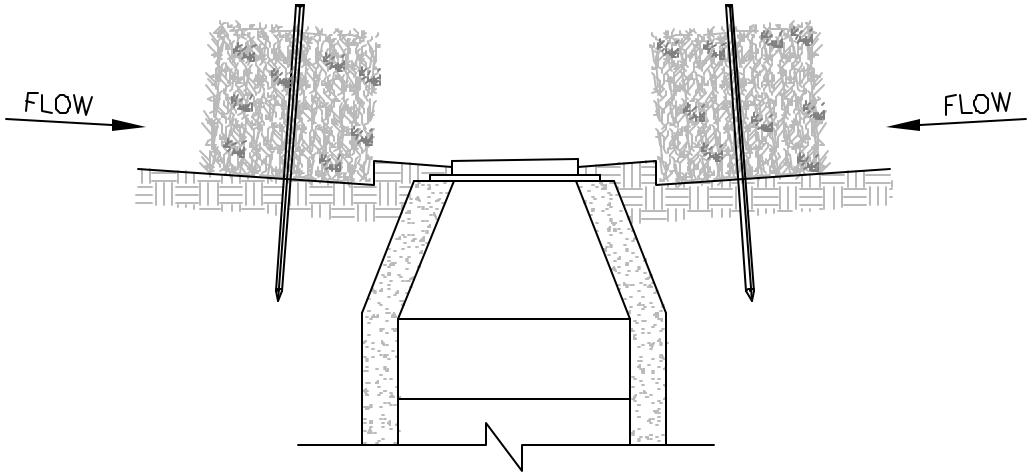

SEDIMENTATION CONTROL AT CATCH BASINS

S:\DWG\DETAILS\699-7 EROS-CB.DWG

NOT TO SCALE

FIG. 699-7

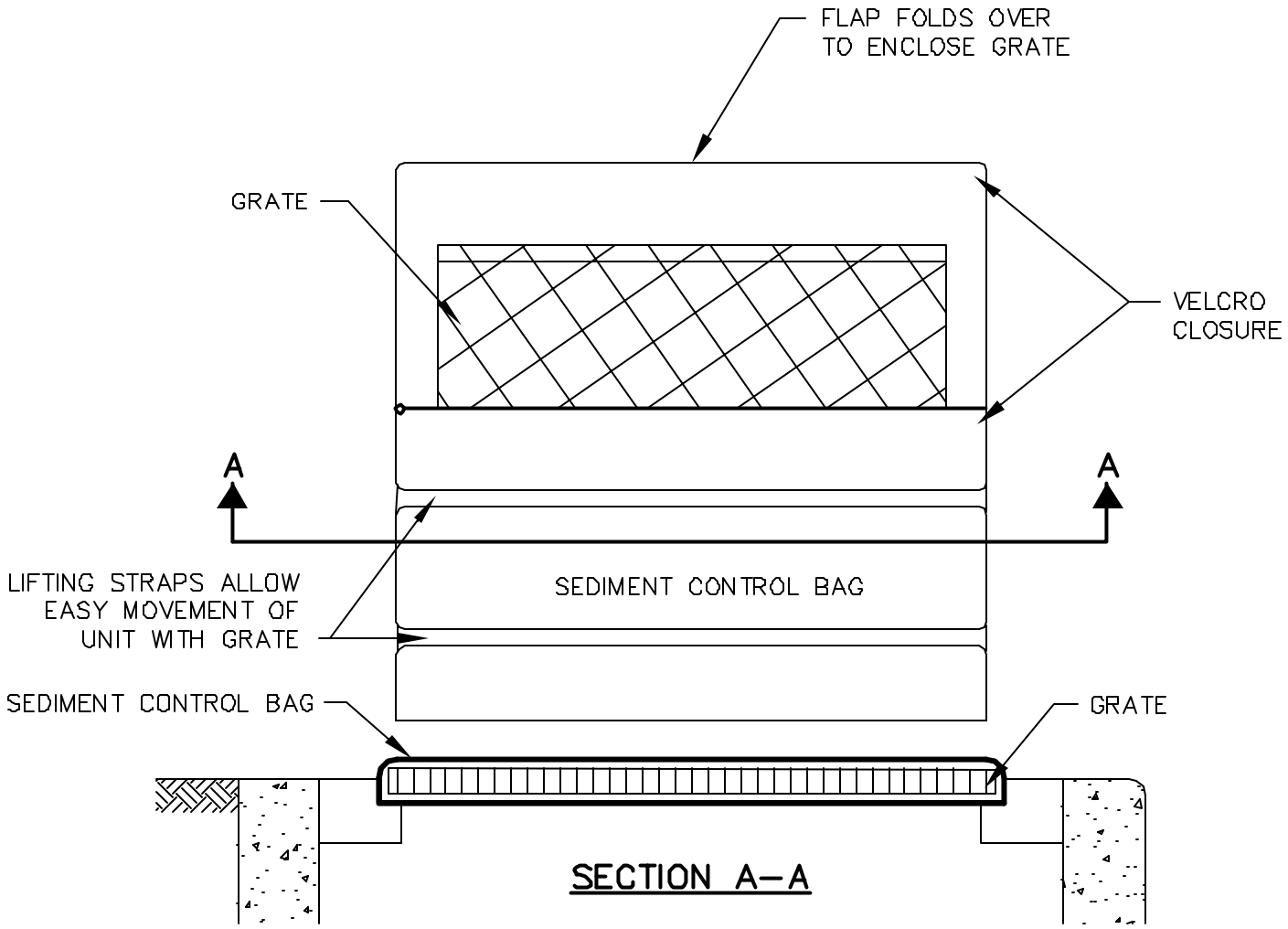

INSTALLATION:
STAND GRATE ON END. PLACE BAG OVER GRATE.
ROLL GRATE OVER SO THAT OPEN END IS UP.
PULL UP SACK.
TUCK FLAP INSIDE TO COMPLETELY ENCLOSE THE GRATE. BE SURE END OF GRATE IS COMPLETELY COVERED BY FLAP OR BAG WILL NOT WORK PROPERLY. HOLDING HANDLES, CAREFULLY PLACE BAG WITH GRATE INSERTED INTO CATCH BASIN FRAME.

MAINTENANCE:
WITH A STIFF BRISTLE BROOM OR SQUARE POINT SHOVEL, REMOVE SILT & OTHER DEBRIS OFF SURFACE AFTER EACH EVENT. REMOVE FINE MATERIAL FROM INSIDE ENVELOPE AS NEEDED.

SEDIMENT CONTROL BAG FOR CATCH BASIN

S:\DWG\DETAILS\669-8 SED CNTRL BAG.DWG

NOT TO SCALE

FIGURE 669–8

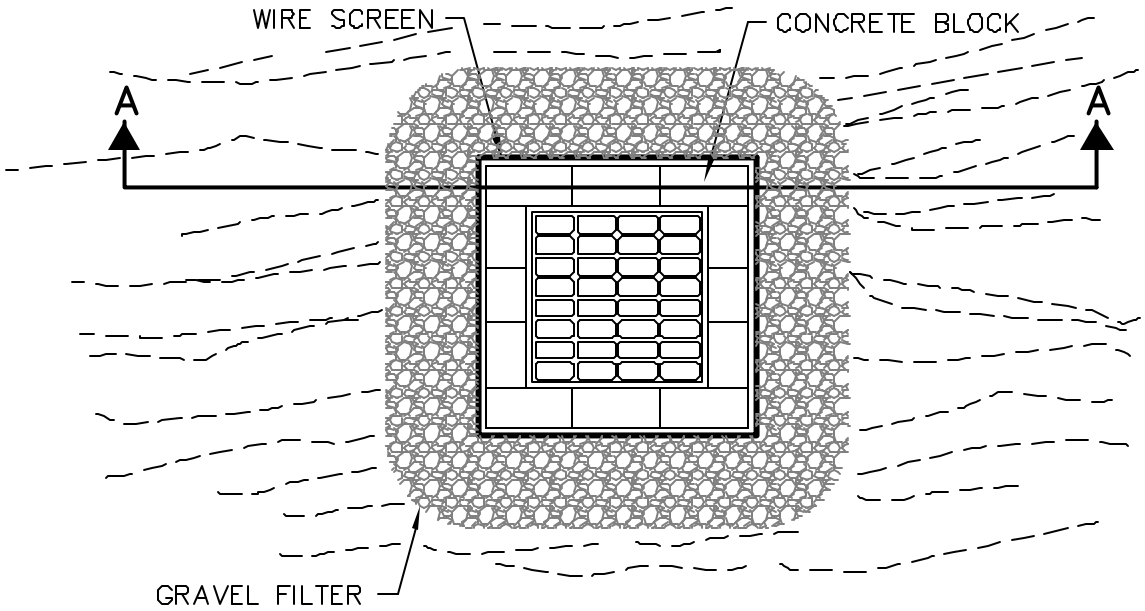

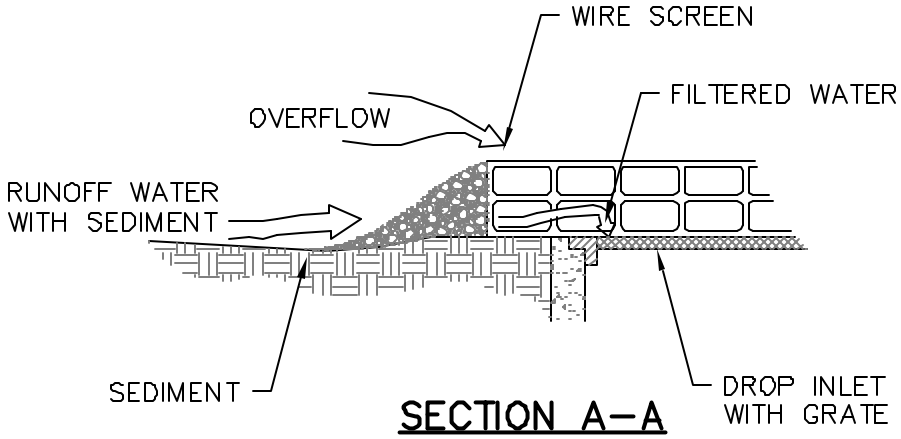

SECTION A–A

BLOCK & GRAVEL DROP INLET SEDIMENT FILTER

THIS PRACTICE IS SHOWN IN FIGURE 699–9 AND SHOULD BE CONSTRUCTED AS FOLLOWS:

1. CONCRETE BLOCKS SHOULD BE PLACED LENGTHWISE ON THEIR SIDES IN A SINGLE ROW AROUND THE PERIMETER OF THE INLET. THE ENDS OF EACH BLOCK SHOULD BE ABUTTING. THE HEIGHT OF THE BARRIER CAN BE VARIED DEPENDING ON THE DESIGN BY STACKING VARIOUS COMBINATIONS OF DIFFERENT SIZED BLOCKS. THE BARRIER SHOULD BE A MINIMUM OF 12 INCHES HIGH AND A MAXIMUM OF 24 INCHES HIGH.

2. HARDWARE CLOTH OR WIRE MESH SHOULD BE PLACED OVER THE OPENINGS OF THE CONCRETE BLOCKS AND EXTENDED AT LEAST 12 INCHES AROUND THE OPENING TO PREVENT AGGREGATE FROM BEING TRANSPORTED THROUGH THE OPENINGS IN THE BLOCK.

3. SEWER STONE OR OTHER CLEAN COARSE AGGREGATE SHOULD BE PLACED AGAINST THE BLOCK TO THE TOP OF THE BARRIER.

BLOCK & GRAVEL DROP INLET SEDIMENT FILTER

S:\DWG\DETAILS\699-9 Block & Gravel D.I. Sed Fltr.DWG

NOT TO SCALE

FIGURE 669–9

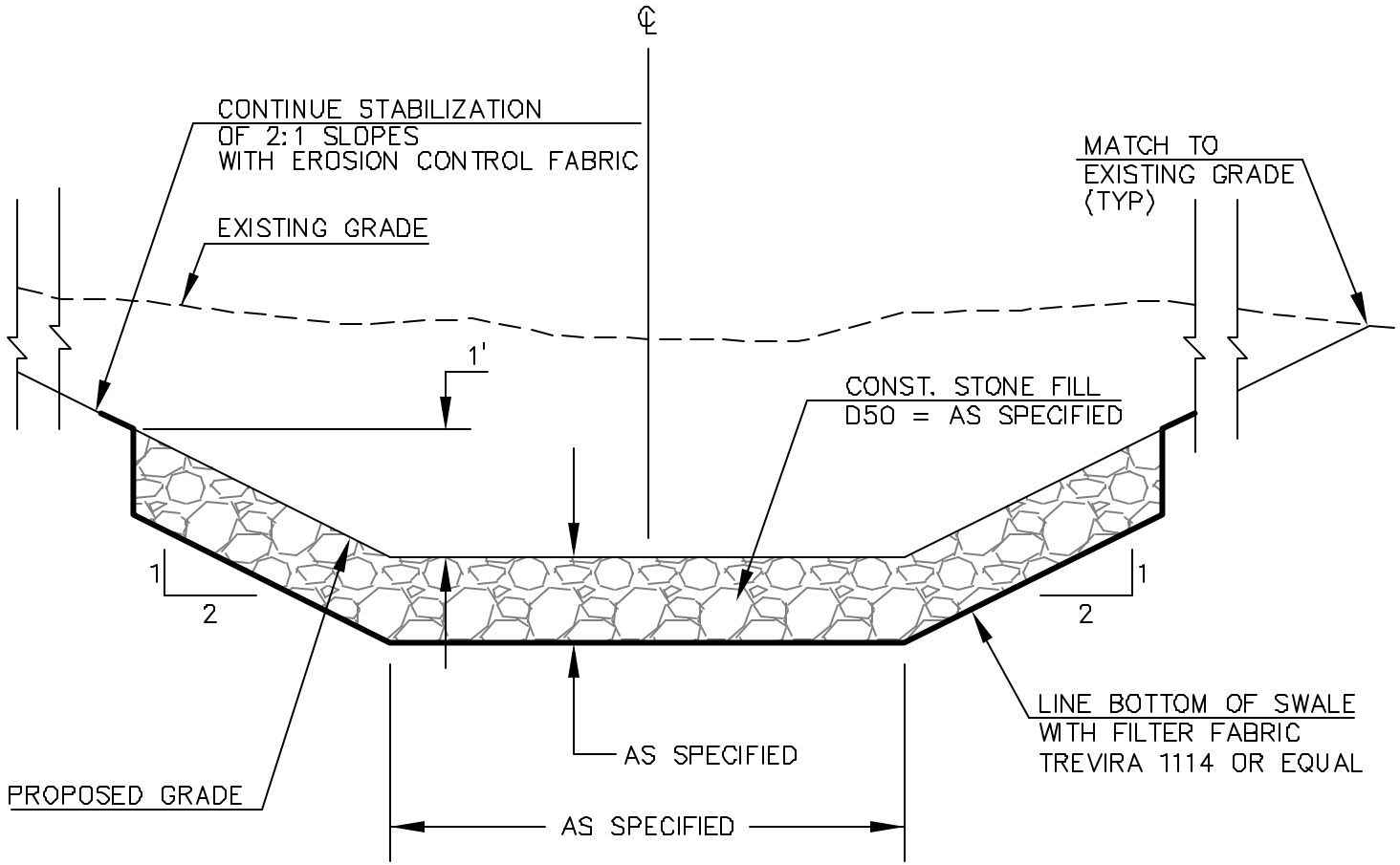

RIP-RAP SWALE DETAIL

S:\DWG\DETAILS\699-10 RIP-RAP-SWALE.DWG

NOT TO SCALE

FIG. 699-10

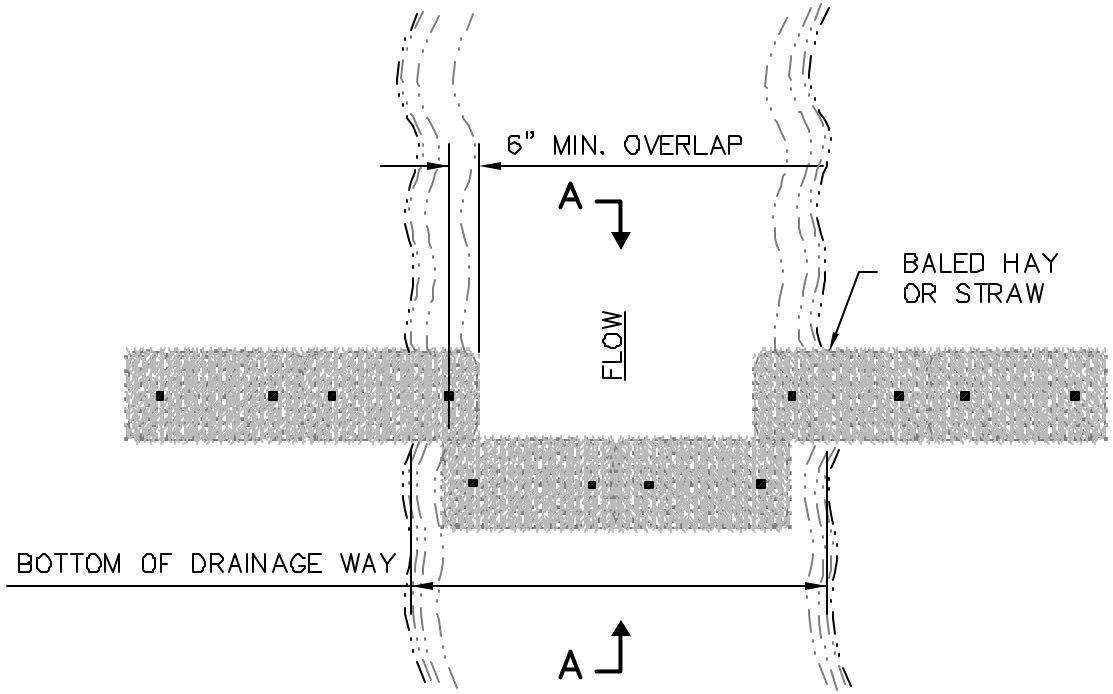

PLAN VIEW

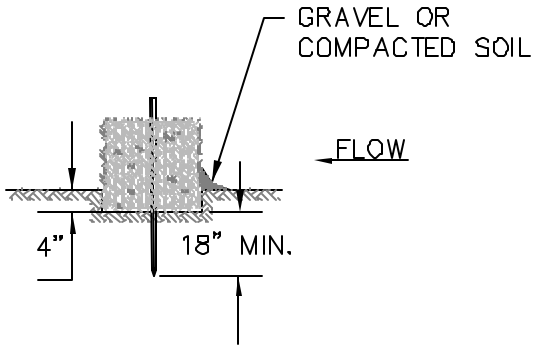

SECTION A–A

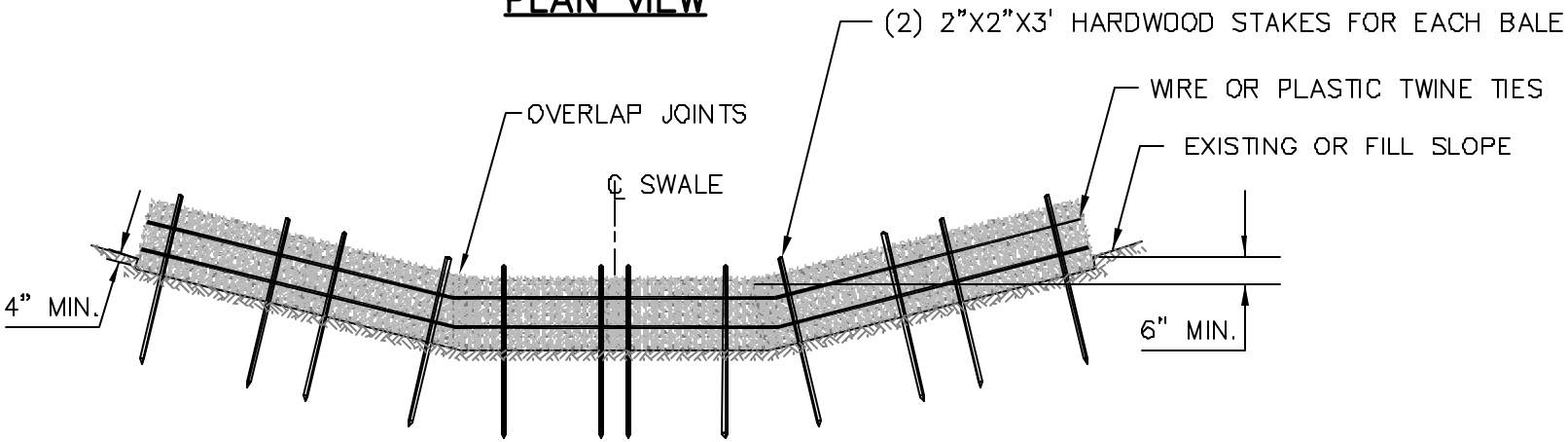

DRAINAGE WAY CROSS SECTION

DETAIL – HAY BALE CHECK DAM

S:\DWG\DETAILS\699-11 CHECKDAM.DWG

NOT TO SCALE

FIG. 699–11

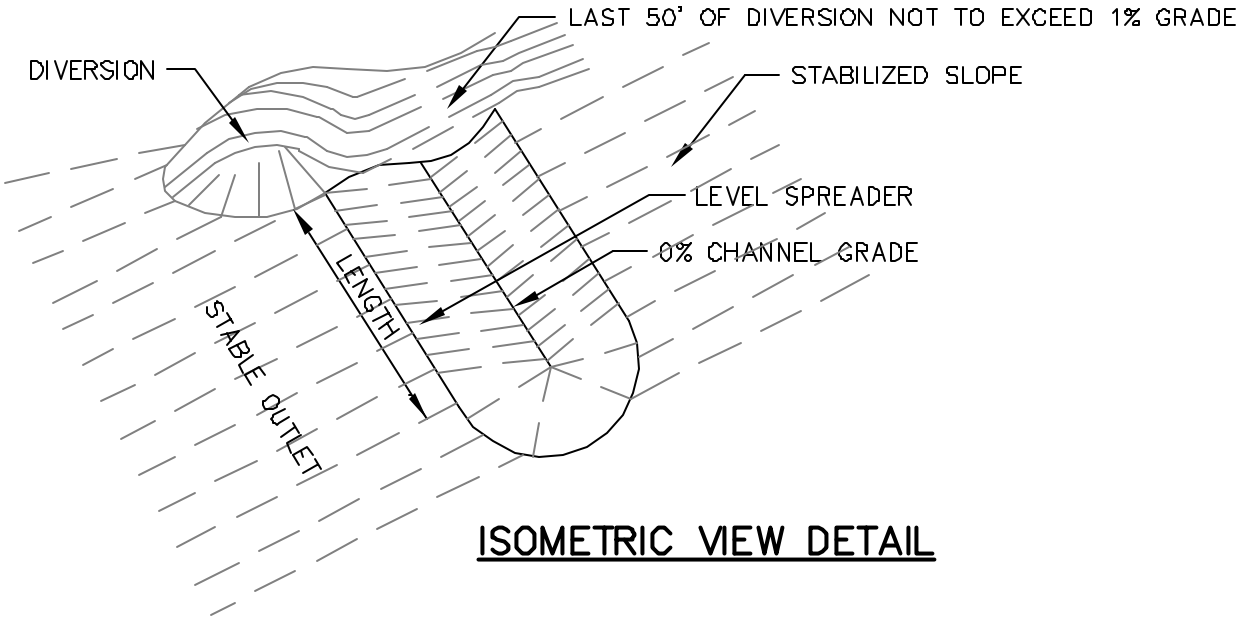

ISOMETRIC VIEW DETAIL

NOT TO SCALE

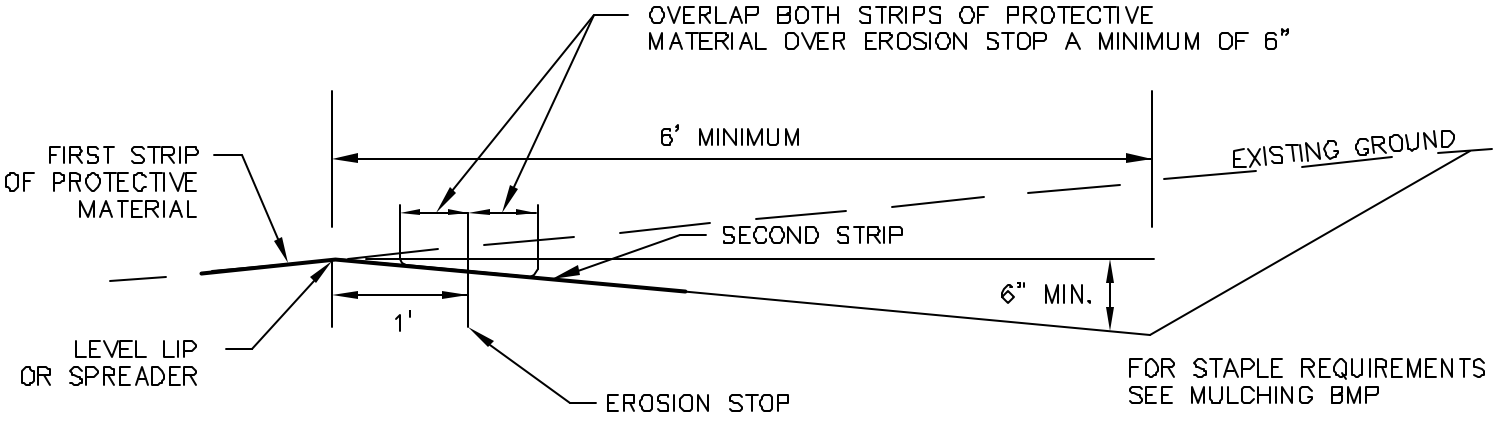

CROSS SECTION DETAIL

LEVEL SPREADER DETAIL

S:\DWG\DETAILS\699-12 LEVEL SPREADER.DWG

NOT TO SCALE

FIG. 699-12

DIVISION 700 -- MATERIALS

TABLE OF CONTENTS

Section 702 -- Bituminous Material

Section 703 -- Aggregates

Section 707 -- Cement Mortar

SECTION 702 – BITUMINIOUS MATERIALS
Table 702-1
Asphalt Cement

Test	VISCOSITY GRADE					
	AC-2.5	AC-5	AC-10	AC-20	AC-30	AC-40
Viscosity, 60°C (140° F), poises	250 + 50	500 + 100	1000 + 200	2000 + 400	3000 + 600	4000 + 800
Viscosity, 135°C (275° F), Cs-minimum	125	175	250	300	350	400
Penetration, 25°C (77° F), 100g, 5 second – minimum	220	140	80	60	50	40
Flash Point, COC, °C (°F)-minimum	163 (325)	177 (350)	219 (425)	232 (450)	232 (450)	232 (450)
Solubility in trichloroethylene, percent minimum	99.0	99.0	99.0	99.0	99.0	99.0
Tests on residue from Thin Film Oven Test:						
Loss on heating, percent-maximum [3]		1.0	0.5	0.5	0.5	0.5
Viscosity, 60°C (140° F), poises – maximum	1000	2000	4000	8000	12000	16000
Viscosity, 25°C (77° F), 5 cm per minute, cm - minimum	100 [1]	100	75	50	40	25
Spot test (when and as specified) [2] with:						
Standard naphtha solvent			Negative for all grades			
Naphtha Xylene-solvent, % Xylene			Negative for all grades			
Heptane-Xylene-solvent, % Xylene			Negative for all grades			

[1] If ductility is less than 100, material will be accepted if ductility at 15.6° C (60° F) is 100 minimum.
[2] The use of the spot test is optional. When it is specified, the Engineer shall indicate whether the standard naphtha solvent, naphtha xylene-solvent, heptane-xylene-solvent will be used in determining compliance with the requirement, and also, in the case of xylene solvent, the percentage of xylene used.
[3] The use of loss on heating is optional.

SECTION 702 – BITUMINIOUS MATERIALS

Table 702-2

Anionic Asphalt Emulsions

Type	Rapid Setting									
Grade	RS-1		RS-2		HFMS-2		MS-4		MS-5	
	min	max	min	max	min	max	min	max	min	max
Tests on emulsions:										
Viscosity, Saybolt Furol at 77° F (25° C), s	20	100			100 (1)		50	500	50	500
Viscosity, Saybolt Furol at 122° F (50° C), s			75	400						
Storage stability test, 24 hour, %		1		1		1		1		1
Coating ability and water resistance:										
Coating, dry aggregate					good		75+		75+	
Coating , after spraying					fair		see (2)(3)(4)		see (2)(3)(4)	
Coating, wet aggregate					fair					
Coating , after spraying					fair					
Sieve test, %	0.10		0.10		0.10		0.10		0.10	
Oil Distillate, %							2.0	7.0	0.0	3.0
Residue by Distillation, %	55		63		65		65		65	
Tests on residue from distillation test:										
Penetration, 77° F (25° C), 100g, 5s	100	200	100	200	100	200	200		150	250
Ductility, 77° F (25° C), 5 cm/min, cm	40		40		40					
Solubility in trichloroethylene, %	97.5		97.5		97.5		97.5		97.5	
Float test, 140° F (60° C), s					1200		50		100	

(1) 50+ when material is used for sealing

(2) Wet Coating: Weight 100 ±0.5 gms. of aggregate, 20 to 30 mesh standard Ottawa sand, into a 600 ml. Glass beaker and add soft tap water, approximately twice the volume of that of sand. Weigh into the beaker containing the sand and water 8 ± 0.2 gms. of the emulsion at room temperature and mix for 2 minutes with a stiff spatula. Cover the mixture with approximately twice its own volume of tap water and pour the water off without further mixing. Repeat this process. After the second rinse, at least 75 percent of the sand shall remain coated.

(3) Stripping: After evaluating the wet coating, place the mixture into a clear 600ml. glass beaker, cover the mixture with tap water, let stand for 12 to 16 hours and examine. At least 75 percent of the sand shall remain coated.

(4) The coating and stripping test may be waived when MS-5 is used for sealing.

SECTION 703 -- AGGREGATES

Table 703-1 -- Required Grading, Graded Course Aggregate

Standard Stone Size	#4	#357	#467	#57	#67	#7	#89
Min to Max	3/4" to1-1/2"	No. 4 to2"	No.4 to1-1/2"	No.4 to1"	No.4 to3/4"	No. 4 to1/2"	No.16 to3/8"

Sieve Size	Percentage by Weight Passing						
2-1/2"	-----	100	-----	-----	-----	-----	-----
2"	100	95-100	100	-----	-----	-----	-----
1-1/2"	90-100	-----	95-100	100	-----	-----	-----
1"	20-55	35-70	-----	95-100	100	-----	-----
3/4"	0-15	-----	35-70	-----	90-100	100	-----
1/2"	-----	10-30	-----	25-60	-----	90-100	100
3/8"	0-5	-----	10-30	-----	20-55	40-70	90-100
No. 4	-----	0-5	0-5	0-10	0-10	0-15	20-25
No. 8	-----	-----	-----	0-5	0-5	0-5	5-30
No. 16	-----	-----	-----	-----	-----	-----	0-10
No. 50	-----	-----	-----	-----	-----	-----	0-5

SECTION 707 -- CEMENT MORTAR

Description

1.1 Cement mortar shall consist of either portland cement of masonry cement, mortar sand, and water.

Materials

2.1 Portland cement shall conform to 520.2.1.

2.2 Masonry cement shall be a portland-cement meeting the requirements of AASHTO M 150.

2.3 Mortar sand shall meet the requirements of AASHTO M 45 except as shown in Table 707-1.

Table 707-1 -- Gradation of Mortar Sand

Sieve Size	Percent by Wt. Passing
No. 8	100
No. 16	60 – 100
No. 50	15 – 35
No. 100	2 – 15
No. 200	0 – 5

NOTE: In lieu of the above, fine aggregate graded in accordance with 520.2.2.2.2 may be used in mortar for mortar rubble masonry and with concrete blocks for catch basins and drop inlets.

2.3.1 Test for impurities shall comply with AASHTO T 21 and darker than the standard shall be cause for rejection, except as provided in 2.3.1.1.

2.3.1.1 Sand for mortar not conforming to 2.3.1 shall be tested in accordance with AASHTO T 71 and it shall meet the requirements of 5.2.3 of AASHTO M 45.

2.4 Water shall meet the requirements of 520.2.5.

Proportions and Procedures

3.1 Mortar shall be composed of 1 part by volume of either portland cement or masonry cement, except as specified in 3.4, combined with 2 parts, by volume, of damp loose mortar sand with water as necessary to obtain required consistency.

3.2 Hand mixing shall require the thorough mixing of the dry cement and damp sand, in a clean, tight mortar box until the mixture is of a uniform color. Water shall be added in such quantity as to form a mortar having the desired consistency.

3.2 Hand mixing shall require the thorough mixing of the dry cement and damp sand, in a clean, tight mortar box until the mixture is of a uniform color. Water shall be added in such quantity as to form a mortar having the desired consistency.

3.3 Machine mixing of mortar shall require adding and mixing dry cement and damp sand, then add water to an approved mixer, for not less than 3 minutes to reach workability.

3.4 Cement for mortar in ashlar or for mortar squared stone masonry shall consist of portland cement only.

3.5 Mortar shall be used within 2-1/2 hours after original mixing when the air temperature is 80 degrees F or higher and within 3-1/2 hours when the air temperature is below 80 degrees F. Mortar not used within these time limits shall be discarded.

3.6 Mortars shall be used and placed in final position within 2-1/2 hours after mixing.

SECTION 708 -- PAINTS

708.01 Description. These specifications are intended to specify paints that will meet service requirements for highway construction.

Paint shall be homogeneous, free of contaminant, and of a consistency suitable for use in the capacity for which it is specified. Finished paint shall well ground and the pigment shall be properly dispersed in the vehicle according to the requirements of the paint. The dispersion shall be of such nature that the pigment does not settle badly, does not cake or thicken in container, and does not become granular or curdled. It shall be easily broken up with a paddle to form a smooth uniform product of the proper consistency and shall possess satisfactory properties in all respects which affect its application and curing.

The color shall match the established standard. The hiding power shall be sufficient to obtain complete hiding of the preceding coat when applied at normal spreading rates. The primer and intermediate coat shall dry with a dull gloss; the finish coat with a full gloss unless otherwise specified.

In these paint specifications, unless otherwise stated, all references to percentages refer to percentages by weight.

708.02 Packaging. All paint furnished must be shipped in strong new containers having a capacity of not more than 5 gallons each. The containers shall be equipped with a lever-type ring seal or lug-type cover and wire bails. Each container shall be so filled that the net weight of the material in the can shall be the product of the weight per gallon determined at 75-80 degrees F and the specified gallon capacity of the can.

All containers of paint shall be clearly labeled with the following information:

- New Hampshire Paint Number, Name and Color
- Lot Number
- Date of Manufacture
- Volume of Contents
- Names and Address of Manufacturer

708.03 Identification. To provide a means of identification, the applicable number and name taken from the following list, unless otherwise specified, shall be printed on the label.

- **NH 4.11 White Traffic Paint**
- **NH 4.12 Yellow Traffic Paint**

1. General. This specification covers white and yellow traffic paint which may be used as a base for drop-on reflecting glass beads, or for use as a plain non-reflective traffic paint. It shall be suitable for either bituminous or concrete surfaces.

2. Paint. The white and yellow traffic paint shall meet the requirements of AASHTO M 248, Type N for Regular Dry and Type F for Fast Dry.

NH 4.13 Glass Spheres for Traffic Paints

1. General. The glass spheres shall be clean, moisture- resistant, water white, transparent, and free from milkiness, pits and excessive air bubbles and they shall meet the requirements of AASHTO M 247.

Traffic Paints

NH 4.11 White Bead Binder (*)
NH 4.12 Yellow Bead Binder (*)
NH 4.13 Glass Spheres for Traffic Paint
NH 4.31 White Curb Paint

(*) Specifications will be furnished if required.

NH 4.31 White Curb Paint

1. General. This specification covers a paint for use on bituminous curb. It shall be a binder suitable for the addition of reflectance type glass beads at the time of application.

2. Type. The paint shall be a 100 percent acrylic emulsion type containing no alkyds, butadiene styrene, or vinyls, and shall be thinned with water.

3. General Requirements.

A. The paint shall be suitable for use over all types of bitulithic surfaces.

B. When applied over emulsified asphalt or tar surfaces, the paint shall not cause lifting, crazing, peeling, or other damage to the base.

C. The material shall be approved by the Bureau of Materials and Research before use.

4. Formulation.

A. Pigment. Rutile titanium dioxid: 2.5 gallon minimum.

B. Vehicle. The vehicle shall consist of 100 percent acrylic polymer dispersed in water together with the minimum amounts of necessary additives, such as pigment dispersants, anti-foaming agents, and preservatives. Not driersd shall be used.

C. Paint. The paint shall meet the following requirements:

	Min.	Max.

Pigment		33%
Total solids	50%	
Fineness of grind (North Standard)	4	
Viscosity (Stormer--Krebs Units)	70	85

5. Characteristics. The paint shall brush easily and have good flowing, leveling, and spreading characteristics, and shall be suitable for application by spray equipment.

6. Testing. The paint shall meet the following solvents resistance test:

Use a sample of unreduced paint for a draw down on 0.0003 inch wet film thickness on glass, and air-dry for 24 hours. Remove the dried paint film in sheets from the glass and weigh out one gram. Place one gram of paint film in 50 millimeter beaker and add 20 grams of paint film in a 50 millimeter beaker and add 20 grams of toluol (TT-T-548). Cover the beaker and observe effect of solvent.

The beaker shall be rotated periodically during the test period. The paint film shall not crumple, cloud the liquid, or otherwise disintegrate in the liquid 48 hours and toluol shall remain clear and colorless throughout the test. Failure of the film to pass this test shall disqualify the product. Procedures for all other test shall be as described in FSS-TT-P-19.

SECTION 711 -- PREFORMED RETROREFLECTIVE PAVEMENT MARKING TAPE

Description

1.1 Description. Preformed retroreflective pavement marking tape shall be either removable or non-removable as specified. Removable tape shall be capable of being removed intact or in large strips. Non-removable tape is designed to remain in place.

1.2 General. Tape shall consist of glass spheres of a high quality imbedded into a binder on a suitable backing that is pre-coated with a pressure sensitive adhesive. The spheres shall be of uniform gradation and distributed evenly over the surface of the tape. The color of the tape shall conform to FHWA color standards for pavement markings and shall be readily visible when viewed under automotive headlights at night.

1.2.1 The marking tape, when applied in accordance with the manufacturer's recommended procedures shall be weather resistant and shall show no appreciable fading, lifting, or shrinkage during the useful life of the marking. The tape, as applied, shall be of good appearance, free of cracks, and the edges shall be true, straight and unbroken.

Materials

2.1 Short Term Pavement Marking Tape-Removable.

2.1.1 Composition. The removable preformed pavement markings shall not contain metallic foil and shall consist of a mixture of high quality polymeric materials and pigments, with glass beads throughout the pigmented portion of the film, and a reflective layer of beads bonded to the top surface. The films shall be precoated with a pressure- sensitive adhesive. A non-metallic medium shall be incorporated to facilitate removal.

2.1.2 General. The glass beads shall not be easily removed when the material surface is scratched with a thumbnail. Tape shall be precoated with a pressure-sensitive adhesive and it shall be capable of being adhered to hot bituminous pavement in accordance with the manufacturer's instructions without the use of heat, solvents, or other additional adhesive means. It shall be immediately ready for traffic after application.

2.1.3 Reflectance. The white and yellow films shall have the following initial minimum reflectance values at 0.2 and 0.5 degrees observation angles and 86.0 degree entrance angle as measured in accordance with the testing procedure of Federal Test Method Standard 370. The photometric quantity
to be measured shall be specific luminance (SL), and shall be expressed as millicandelas per square foot per footcandle (mcd/ft2/fc-1). The metric equivalent shall be expressed as millicandelas per square meter per lux. The test distance shall be 50 ft. (15m) and the sample size shall be a 2.0 x 2.5 ft rectangle (0.61 x 0.76m). The angular aperture of both the photoreceptor and light projector shall be 6 minutes of arc. The reference center shall be the geometric center of the sample, and the reference axis shall be taken perpendicular to the test sample.

	White		Yellow	
Observation Angle (degrees)	0.2	0.5	0.2	0.5
SL (mcd/ft2/fc-1)	1770	1270	1310	820

2.1.4 Adhesion. The manufacturer shall be required to demonstrate that the properly applied pavement marking adheres to the roadway under climatic and traffic conditions normally encountered in the construction work zone.

2.1.5 Skid resistance. The surface of the markings shall provide an initial minimum skid resistance value of 50 BPN when tested according to ASTM E 303-74.

2.1.6 Removability. The marking film shall be removable from asphalt and portland cement concrete intact or in large pieces, either manually or with a roll-up device, at temperatures above 40 degrees F (4 degrees C) without use of heat, solvents, grinding, or blasting. The manufacturer shall be able to show that the marking film has met this requirement after the following minimum traffic exposure based on transverse test decks with rolling traffic:

1. Time in Place: 632 days
2. ADT per Lane: 9,000 (23% Trucks, 3.5 axles/unit)

2.2 Short Term Pavement Marking Tape Non-Removable.

2.2.1 Composition. Preformed pavement marking tape shall consist of retroreflective films on a conformable backing, precoated with pressure-sensitive adhesive. This tape is not readily removed and it is intended to be obliterated by over- paving or removal of pavement on which it is placed.

2.2.2 General. The glass beads shall not be easily removed when the material surface is scratched with a thumbnail. Tape shall be precoated with a pressure-sensitive adhesive and it shall be capable of being adhered to hot bituminous pavement in accordance with the manufacturer's instructions without the use of heat, solvents, or other additional adhesive means. It shall be immediately ready for traffic after application.

2.2.3 Reflectance. The white and yellow films shall have the following initial minimum reflectance values at 0.2 and 0.5 degrees observation angles and 86.0 degree entrance angle as measured in accordance with the testing procedure of Federal Test Method Standard 370. The photometric quantity to be measured shall be specific luminance (SL), and shall be expressed as millicandelas per square foot per footcandle (mcd/ft2/fc-1). The metric equivalent shall be expressed as millicandelas per square meter per lux. The test distance shall be 50 ft. (15m) and the sample size shall be a 2.0 x 2.5 ft rectangle (0.61 x 0.76m). The angular aperture of both the photoreceptor and light projector shall be 6 minutes of arc. The reference center shall be the geometric center of the sample, and the reference axis shall be taken perpendicular to the test sample.

	White		Yellow	
Observation Angle (degrees)	0.2	0.5	0.2	0.5
SL (mcd/ft2/fc-1)	1360	760	820	510

2.2.4 Adhesion. The manufacturer shall be required to demonstrate that the properly applied pavement marking adheres to the roadway under climatic and traffic conditions normally encountered in the construction work zone.

2.2.5 Skid resistance. The surface of the markings shall provide an initial minimum skid resistance value of 35 BPN when tested according to ASTM E 303-74.

2.2.6 Abrasion resistance. Samples of the test material shall not wear through to the conformable backing surface in less than 125 cycles when tested in accordance to Federal Test Method Standard 141, Method 6192, except using an H-22 wheel and 250 gm. load.

2.3 Pavement Marking Tape, 60 mil, Type I.

2.3.1 Composition. The retroreflective pliant polymer pavement marking film shall consist of a mixture of high quality polymeric materials, pigments, and glass beads distributed throughout its base cross-sectional area, with a reflective layer of beads bonded to the top surface.

2.3.2 The film shall have glass bead retention qualities such that when a 2" x 6" sample is bent over a 1/2 inch diameter mandrel, with the 2 inch dimension perpendicular to the mandrel axis, microscopic examination of the area on the mandrel shall show no more than 10% of the beads with entrapment by the binder of less than 40%.

2.3.2.1 The size, quality, and refractive index of the glass beads shall be such that the performance requirements

for the markings shall be met. The bead adhesion shall be such that beads are not easily removed when the material surface is scratched with a thumbnail.

2.3.2.2. Preformed words and symbols shall conform to the applicable shapes and sizes as outlined in the current edition of the "Manual on Uniform Traffic Control Devices for Streets and Highways", or as modified.

2.3.3 Reflectance. The white and yellow films shall have the following initial minimum reflectance values at 0.2 and 0.5 degrees observation angles and 86.0 degree entrance angle as measured in accordance with the testing procedure of Federal Test Method Standard 370. The photometric quantity to be measured shall be specific luminance (SL), and shall be expressed as millicandelas per square foot per footcandle (mcd/ft2/fc-1). The metric equivalent shall be expressed as millicandelas per square meter per lux. The test distance shall be 50 ft. (15m) and the sample size shall be a 2.0 x 2.5 ft rectangle (0.61 x 0.76m). The angular aperture of both the photoreceptor and light projector shall be 6 minutes of arc. The reference center shall be the geometric center of the sample, and the reference axis shall be taken perpendicular to the test sample.

	White		Yellow	
Observation Angle (degrees)	0.2	0.5	0.2	0.5
SL (mcd/ft2/fc-1)	550	380	410	250

2.3.3.1. Reflectivity retention. To have a good, effective performance life, the glass beads must be strongly bonded and not be easily removed by traffic wear. The following test shall be employed to measure reflectivity retention:

Taber Abraser Simulation Test

Using a Taber Abraser with an H-18 wheel and a 125 gram load, the sample shall be inspect at 200 cycles, under a microscope, to observe the extent and type of bead failure.
No more than 15% of the beads shall be lost due to popout and the predominant mode of failure shall be "wear down" of the beads.

2.3.4 Adhesion. The preformed markings shall be capable of being adhered to asphalt concrete or portland cement concrete by a precoated pressure-sensitive adhesive. A primer may be used to precondition the pavement surface. The preformed marking shall mold itself to pavement contours by the action of traffic. The dense, and open graded asphalt concrete wearing courses during the paving operation in accordance with the manufacturer's instructions. After
application the markings shall be immediately ready for traffic. The manufacturer, when bidding, shall identify proper solvents and/or primers to be applied at the time of application, all equipment necessary for proper application, and recommendations for application that will assure an effective performance life. When stored in a cool, dry area indoors the materials shall be suitable for use for one year after the date of purchase.

2.3.5 Skid resistance. The surface of the retroreflective pliant polymer film shall provide an initial minimum skid resistance value of 45 BPN when tested according to ASTM E 303-74.

2.3.6 Patchability. The pavement marking film shall be capable of use for patching worn areas of the same type film in accordance with manufacturer's instructions.

2.3.7 Tensile strength and elongation. The film shall have a minimum tensile strength of 40 pounds per square inch of cross-section when tested according to ASTM D 638-76, except that a sample 6 inches x 1 inch shall be tested at a temperature between 70 degrees F and 80 degrees F using a jaw speed of 10 to 12 inches per minute. The sample shall have a minimum elongation of 75% at break when tested by this method.

2.3.8 Effective performance life. The film, when applied according to the recommendations of the manufacturer, shall provide a neat, durable marking that will not flow or distort due to temperature if the pavement surface remains stable. Although reflectivity is reduced by wear, the pliant polymer shall provide a cushioned, resilient

substrate that reduces bead crushing and loss. The film shall be weather resistant and, through normal traffic wear, shall show no appreciable fading, lifting, or shrinkage throughout the useful life of the marking, and shall show no significant tearing, roll back, or other signs of poor adhesion.

2.4 Pavement Marking Tape, 25 mil, Type II.

2.4.1 Composition. The retroreflective pavement marking material shall consist of glass beads embedded in a film with a thin, flexible conformable backing which is precoated with a pressure sensitive adhesive.

2.4.2 The film shall have glass bead retention qualities such that when a 2 inch x 6 inch sample is bent over a 1/2 inch diameter mandrel, with the 2 inch dimension perpendicular to the mandrel axis, microscopic examination of the area on the mandrel shall show no more than 10% of the beads with entrapment by the binder of less than 40%.

2.4.2.1 The size, quality, and refractive index of the glass beads shall be such that the performance requirements for the markings shall be met. The bead adhesion shall be such that beads are not easily removed when the material surface is scratched with a thumbnail.

2.4.2.2 Preformed words and symbols shall conform to the applicable shapes and sizes as outlined in the current edition of the "Manual on Uniform Traffic Control Devices for Streets and Highways", or as modified.

2.4.3 Reflectance. The white and yellow films shall have the following initial minimum reflectance values at 0.2 and 0.5 degrees observation angles and 86.0 degree entrance angle as measured in accordance with the testing procedure of Federal Test Method Standard 370. The photometric quantity to be measured shall be specific luminance (SL), and shall be expressed as millicandelas per square foot per footcandle (mcd/ft2/fc-1). The metric equivalent shall be expressed as millicandelas per square meter per lux. The test distance shall be 50 ft. (15m) and the sample size shall be a 2.0 x 2.5 ft rectangle (0.61 x 0.76m). The angular aperture of both the photoreceptor and light projector shall be 6 minutes of arc. The reference center shall be the geometric center of the sample, and the reference axis shall be taken perpendicular to the test sample.

	White		Yellow	
Observation Angle (degrees)	0.2	0.5	0.2	0.5
SL (mcd/ft2/fc-1)	960	760	680	510

2.4.4 Adhesion. The preformed markings shall be capable of being adhered to asphalt concrete or portland cement concrete by a precoated pressure-sensitive adhesive. A primer may be used to precondition the pavement surface. The preformed marking shall mold itself to pavement contours by the action of traffic. The pavement marking films also shall be capable of application to new, dense and open graded asphalt concrete wearing courses during the paving operation in accordance with the manufacturer's instructions. After application the markings shall be immediately ready for traffic. The manufacturer, when

bidding shall identify proper solvents and/or primers to be applied at the time of application, all equipment necessary for proper application, and recommendations for application that will assure an effective performance life. When stored in a cool, dry area indoors the materials shall be suitable for use for one year after date of purchase.

2.4.5 Skid resistance. The initial minimum skid resistance values shall be 45 BPN as measured by the British Portable Skid Tester in accordance with ASTM E 303-74.

2.4.6 Acid resistance. The beads shall show resistance to etching, hazing, or delamination of bead surface after exposure to a 1% solution of sulfuric acid. The test shall preformed as follows:

> Soak 1 gram of beads in 100 cc of a 1% H2S04 solution for 100 hours, then decant the acid solution and dry the beads at 100 degrees C. Microscopic examination of a sample of the beads shall show no more than 5% of the beads altered by the acid.

SECTION 718 -- REFLECTIVE SHEETING

718.01 Description. Reflective sheeting shall consist of a retroreflective lens system having a smooth outer surface. When adhesive backing is used, the sheeting shall have a precoated adhesive on the backside protected by an easily removable liner. Types specified refer to levels of performance in terms of reflective intensity.

718.02Color Requirements. The colors specified shall conform to the applicable requirements of AASHTO M268 except modified as follows:

- Silver is an acceptable color designation for white.
- Table 2 shall be used for the Type-A orange sheeting
-Minimum reflectance limit for the color orange in table 2 shall be 12.
.

The Engineer may accept colors by Certificate of Compliance or may require the Contractor to provide copies of laboratory test reports to substantiate compliance with contact color requirements.

718.03 Reflective Intensity. The reflective sheeting shall have minimum specific intensity per unit area (SIA) as shown in Tables I, II, III or IV expressed as "candelas per footcandle per square foot".

718.04 Specular Gloss. The reflective sheeting shall have an 85 degree specular gloss of not less than 40 for Types II and II-A, and not less than 50 for types III and IV, when tested in accordance with ASTM D523.

718.05 Color Processing. The sheeting shall permit cutting color processing with compatible transparent and opaque process inks in accordance with the manufacturers recommendation at temperatures of 60 degrees F to 100 degrees R and relative humidity of 20 to 80 percent. The sheeting shall be heat resistant and permit force curing without staining of applied or unapplied sheeting at temperatures as recommended by the manufacturer. Color processing for Type III material shall be restricted to sheeting with heat activated adhesive backing unless otherwise recommended by the manufacturer.

718.06 Shrinkage. A 9 inch by 9 inch reflective sheeting specimen with liner shall be conditioned a minimum of 1 hour at 72 degrees F and 50 percent relative humidity. The liner shall be removed and the specimen placed on a flat surface with the adhesive side up. Ten minutes after liner is removed and again after 24 hours, the specimen shall be measured to determine the amount of dimensional change. The reflective sheeting shall not shrink in any dimension more
than 1/32 inch in 10 minute nor more than 1/8 inch in 24 hours.

718.07 Flexibility. Type II and Type IIA Sheeting Material: The sheeting, applied according to the manufacturer's recommendations to a clean, etched 0.020 inch by 2 inch by 8 inch aluminum panel of alloy 6061-T6 conditioned a minimum of 48 hours and tested at 72 degrees F and 50 percent relative humidity shall be sufficiently flexible to show no cracking when bent around a 3/4 inch mandrel. Type III and Type IV Sheeting Material:

The sheeting, with the liner removed and conditioned for 24 hours at 72 degrees F and 50 percent relative humidity, shall be sufficiently flexible to show no cracking when slowly bent, in one second's time, around a 1/8 inch mandrel with adhesive contacting the mandrel. Non-adhesive sheetings shall show no signs of cracking or crazing when flexed repeatedly over a 1/16 inch mandrel to 180 degrees at 72 degrees F.

718.08 Adhesive. The reflective sheeting shall include a precoated pressure sensitive adhesive backing (Class 1) or a tack-free heat activated adhesive backing (Class 2) either of which may be applied without necessity of additional adhesive coats on either the reflective sheeting or application surface. The Class 1 adhesive shall be a pressure sensitive adhesive of the aggressive tack type requiring no heat solvent or other preparation for adhesion to smooth clean surfaces. The Class 2 adhesive backing shall be a tack-free adhesive activated by applying heat in excess of 175 degrees F to the materials as in the heat-vacuum process of sign fabrication. The protective liner attached to the adhesive shall be removed by peeling without soaking in water or other solvents without breaking, tearing, or removing any adhesive from the backing. The protective liner shall be easily removed following accelerated storage for 4 hours at 160 degrees F under a weight of 2.5 pounds per square inch. The adhesive backing of the reflective sheeting shall produce a bond to support a 1.75 pound weight for 5 minutes, without the bond peeling for a distance of more than 2.0 inches when applied to a smooth aluminum surface.

718.09 Impact Resistance. Type II, Type II-A, and Type III reflective sheeting material, applied according to the manufacturer's recommendations to a cleaned, etched aluminum panel of alloy 6061-T6, 0.04 inches by 3 inches by 5 inches and conditioned for 24 hours at 72 degrees F and 50 percent relative humidity, shall show no cracking when the face of the panel is subjected do an impact of 2.0 pound weight with a 5/8 inch rounded tip, dropped from a 10 inch-pound setting on a Gardner Variable Tester, 1G-1120. For Type IV material a 100 inch-pound setting should be used.

718.10 Accelerated Weathering. When applied in accordance with recommended procedures, the reflective material shall be
weather resistant and, following cleaning in accordance with manufacturer's recommendations, shall show no appreciable discoloration, cracking, blistering, or dimensional change. Following exposure, the panels shall be washed with a 5 percent HCl solution for 45 seconds, rinsed thoroughly with clean water, blotted with a soft clean cloth, brought to equilibrium at standard conditions and tested. It shall have not less than the percent of the minimum SIA specified in the table below when subjected to accelerated weathering in accordance with ASTM G 23, Type E or EH weatherometer with the humidifier off.

Type of Material	Hours Tested	Minimum Specific Intensity Per Unit Area
II	1000	50 percent of Table I
II-A	2200*	65 percent of Table II
III	2200*	80 percent of Table III
IV	250	50 percent of Table IV

*For orange material having glass bead retroreflective elements, the hours tested shall be 500.

718.11 Intended Use. The reflective sheeting specified herein is intended for use on surfaces of highway signs and other traffic control devices to assure their optimum visibility by day, and at night when exposed to a light source, and whether dry or totally wet by rain.

718.12 Reference Source. This specification is taken from, and is intended to conform to, Federal Highway Administration publication, Standard Specifications for Construction of Roads and Bridges on Federal Highway Projects.

TABLE 718-1

Minimum Specific Intensity Per Unit Area (SIA)
(Candelas Per Footcandle Per Square Foot)

Type II Sheeting

Obser-vation Angle (o)	Entrance Angle (o)	White	Red	Orange	Brown	Yellow	Green	Blue
0.2	-4	70	14.5	25.0	2.0	50	9.0	4.0
0.2	+30	30	6.0	7.0	1.0	22	3.5	1.7
0.5	-4	30	7.5	13.5	1.0	25	4.5	2.0
0.5	+30	15	3.0	4.0	0.5	13	2.2	0.8

TABLE 718-2

Minimum Specific Intensity Per Unit Area (SIA)
(Candelas Per Footcandle Per Square Foot)

Type II-A Sheeting

Obser-vation Angle (o)	Entrance Angle (o)	White	Red	Orange	Brown	Yellow	Green	Blue
0.2	-4	140	30	60	5	100	30	10
0.2	+30	60	12	22	2	36	10	4
0.5	-4	50	10	20	2	33	9	3
0.5	+30	28	6	12	1	2	6	2

TABLE 718-3

Minimum Specific Intensity Per Unit Area (SIA)
(Candelas Per Footcandle Per Square Foot)

Type III Sheeting

A -- Glass Bead Retroreflective Element Material

Obser-vation Angle (o)	Entrance Angle (o)	White	Red	Orange	Yellow	Green	Blue
0.2	-4	250	45	100	170	45	20.0
0.2	+30	150	25	60	100	25	11.0
0.5	-4	95	12	30	62	15	7.5
0.5	+30	65	10	25	45	10	5.0

B -- Prismatic Retroreflective Element Material

Obser-vation Angle (o)	Entrance Angle (o)	White	Red	Orange	Yellow	Green	Blue
0.2	-4	250	45.0	100	170	45.0	20.0
0.2	+30	95	13.3	26	64	11.4	11.0
0.5	-4	200	28.0	56	136	24.0	18.0
0.5	+30	65	10.0	25	45	10.0	5.0

TABLE 718-4

Minimum Specific Intensity Per Unit Area (SIA)
(Candelas Per Footcandle Per Square Foot)

Type IV Sheeting*

Obser-vation Angle (o)	Entrance Angle (o)	White	Red	Orange	Yellow	Green	Blue
0.2	-4	250	35.0	70	170	30.0	20.0
0.2	+30	95	13.3	26	64	11.4	7.6
0.5	-4	200	28.0	56	136	24.0	18.0
0.5	+30	65	8.4	17	40	7.2	4.8