STANDARD SPECIFICATIONS

for

ROAD, DRAIN & SEWER CONSTRUCTION

Approved & Adopted
January 2019
Revised January 22, 2020

Manchester Highway Commission

Toni Pappas, Chairman

Patrick Robinson, Vice Chairman
James Burkush, Clerk

Trixie Vazquez, Commissioner
Armand Forest, Commissioner

Kevin A. Sheppard, P.E., Public Works Director
Timothy J. Clougherty, Deputy Public Works Director

Amendments and revisions subsequent to the Standard Specifications adoption date of January 2019:

February 1, 2019 - *Section 401* -Add "Winter Binder" Spec, Revise Min Binder Content Criteria, revise TRB content in mixes, add use of Warm Mix additives (WMA)
Section 414 – Correct pay items
Section 417 – Add paragraph 5.1.1
Section 606 - Add AWPA references
Section 609 – Add paragraph 2.4.1.1, use of PG 76-28 in curb mix

January 22, 2020 - *Definitions* – Added "Business Day"
Section 5- Revisions to 5.2.7, 5.2.8, added 5.12.1.3.1 and 5.12.2.6, Removal of Detail 5-6
Section 401 – added: continuous asphalt supply((¶3.11.2.8), anti-strip additive requirement(¶3.10.10.7).
Section 409 – added: finished appearance criteria (¶4.6)
Section 632 – Revised pay items 632.4 and 632.5, Obilterate lines

#

PREFACE

This edition of the City of Manchester, Department of Public Works, Standard Specifications for Road, Drain and Sewer Construction (hereinafter "The Standard Specifications") are intended to be used on construction projects within the City of Manchester. The State of New Hampshire, Department of Transportation Standard Specifications for Road and Bridge Construction and other specifications within the construction industry have been used as the basis for these specifications contained herein. They have been edited and adapted to suit the needs and requirements of the Department of Public Works.
These specifications are intended to relay to developers, contractors and other builders and trades, information concerning the Department of Public Works requirements relative to all construction under its jurisdiction in the City of Manchester, New Hampshire. To facilitate this end, the Standard Specifications have been divided as follows:

DEFINITIONS AND TERMS

This section lists and defines several terms found throughout the specifications.

PART I – PUBLIC IMPROVEMENTS, EXCAVATION AND PERMITING

Part I of the Standard Specifications outlines the Department's requirements concerning public improvements included in site development and subdivision projects. These requirements shall also apply to off-site improvements conducted within streets, rights-of-way, easements or other public lands belonging to the City of Manchester, New Hampshire.
All work relative to the above shall be conducted according to Part II and the Technical Specifications as outlined in Part III.

PART II – CONTRACT GENERAL PROVISIONS

Part II of the Standard Specifications outlines the Department's contractual requirements concerning work for road, drain and sewer projects along with other related work. These requirements shall apply to all such work contracted by the City of Manchester, Department of Highways and shall be considered a part of all proposals.

PART III – TECHNICAL SPECIFICATIONS

Part IV of the Standard Specifications outlines the Department's detailed requirements concerning the control of material, rules of construction and basis of payment. Supplemental Specifications not yet considered standard and Special Provisions for explaining items of work unique to a specific project, will be included in the proposal forms prepared by the Department. The sections included in this part along with any Supplemental Specifications and Special Provisions, shall be considered a part of all proposals.

STANDARD SPECIFICATIONS
For
ROAD, DRAIN & SEWER
CONSTRUCTION

TABLE OF CONTENTS

Page

TABLE OF CONTENTS ii

LIST OF FIGURES xi

LIST OF PAY ITEM TABLES xv

DEFINITIONS AND TERMS 1

I -PUBLIC IMPROVEMENTS, EXCAVATION AND PERMITING 14

SECTION 1 - GENERAL REQUIREMENTS 15

SECTION 2 -- ROADWAY REQUIREMENTS 18

2.1 General 18

2.2 Horizontal Alignment 18

2.3 Vertical Alignment 19

2.4 Cross Sections 19

2.5 Driveways 19

SECTION 3 - SEWER REQUIREMENTS 25

3.1 General 25

3.2 Horizontal Alignment 25

3.3 Vertical Alignment 26

3.4 Pump Stations 27

3.5 Force mains 29

SECTION 4 - STORM DRAINAGE REQUIREMENTS 30

4.1 Calculations. 30

4.2 Drainage Pipe 30

4.3 Drainage Structures 31
4.4 Detention Basins 32
SECTION 5 - STREET EXCAVATION REQUIREMENTS 33
5.1 Excavation Permit - General Instructions 33
5.2 Permit Fees and Requirements. 34
5.2.13 Insurance Requirements 36
5.2.14 Bond Requirements 36
5.2.15 Degradation Charges 36
5.3 Winter Excavation Permits 37
5.4 Emergency Excavations. 38
5.5 Inspection Agreement. 39
5.6 Encumbrances and Traffic Control 39
5.7 Protection of Work Area 40
5.8 Proof of Compliance 40
5.9 Responsibility of Street Restoration and Patching 41
5.10 Number of Permits Issued. 41
5.11 Moratorium. 41
5.12 Street Patching and Restoration Requirements 42
5.12.1 General Requirements 42
5.12.2 Aggregate Base Layers 43
5.12.3 Temporary Asphalt Patch 44
5.12.4 Permanent Asphalt Patch 44
5.12.5 Special Patch Conditions 45
SECTION 6 - GENERAL PROVISIONS FOR CONSTRUCTION OF PUBLIC IMPROVEMENTS 52
6.1 Scope of Work 52
6.2 Control of the Work 52
6.3 Control of Material 57
6.4 Legal Relations and Responsibility to Public 60
6.5 Prosecution and Progress 66
II -CONTRACT GENERAL PROVISIONS 68

SECTION 101 - BIDDING REQUIREMENTS AND CONDITIONS.....69
101.01 Prequalification of Bidders. 69
101.02 Contents of Proposals. 69
101.03 Issuance of Proposals. 70
101.04 Interpretation of Quantities in the Bid Schedule. 70
101.05 Examination of Plans, Specifications, Proposal and Site of Work. 71
101.06 Familiarity with Laws. 72
101.07 Preparation of Bids. 72
101.08 Irregular Bids. 73
101.09 Proposal Guaranty. 74
101.10 Delivery of Bids. 74
101.11 Withdrawal of Bids. 74
101.12 Combination of Proposals. 74
101.13 Public Opening of Bids. 74
101.14 Disqualification of Bidders. 75
101.15 Materials Statement. 75
SECTION 102 -- AWARD AND EXECUTION OF CONTRACT.....76
102.01 Consideration of Proposals. 76
102.02 Award of Contract. 76
102.03 Cancellation of Award. 76
102.04 Return of Proposal Guaranty. 76
102.05 Requirement of Contract Bonds. 76
102.06 Execution and Approval of Contract. 77
102.07 Failure to Execute Contract. 77
SECTION 103 -- SCOPE OF WORK 78
103.01 Intent of Contract. 78
103.02 Revisions to the Contract 78
103.03 Maintenance of Traffic. 83
103.04 Rights In and Use of Materials Found on the Project. 83
103.05 Final Cleaning Up. 84
103.06 Contractor's Responsibility for Work.. 84

103.07 Environmental Protection. 85
103.08 Value Engineering Proposals by Contractor. 85
SECTION 104 -- CONTROL OF THE WORK 89
104.01 Authority of Engineer. 89
104.02 Plans and Working Drawings. 89
104.03 Conformity with Plans and Specifications. 90
104.04 Coordination of Specifications. 90
104.05 Cooperation by Contractor. 91
104.06 Cooperation with Utilities. 92
104.07 Cooperation Between Contractors. 94
104.08 Construction Stakes, Lines and Grades. 94
104.09 Authority and Duties of Representatives of the Engineer. 95
104.10 Inspection of Work. 95
104.11 Removal of Unacceptable and Unauthorized Work. 96
104.12 Load and Speed Restrictions. 96
104.13 Maintenance During Construction. 97
104.14 Failure to Maintain the Work. 97
104.15 Acceptance. 97
104.16 Claims for Adjustment. 98
104.17 Resolution of Claims and Disputes 100
SECTION 105 -- CONTROL OF MATERIAL 101
105.01 Source of Supply and Quality Requirements. 101
105.02 Samples, Tests, Cited Specifications. 101
105.03 Certificates of Compliance. 102
105.04 Plant Inspection. 104
105.05 Acceptance of Manufactured Materials. 104
105.06 Storage and Handling of Materials. 105
105.07 Unacceptable Materials. 105
105.08 Alternates, Substitutions and Contractor's Options. 105
105.09 Department-Furnished Material. 105
105.10 Disposal of Surplus Waste Materials. 106

SECTION 106 -- LEGAL RELATIONS & RESPONSIBILITY TO PUBLIC 107
106.01 Laws to be Observed. 107
106.02 Permits, Licenses and Taxes. 111
106.03 Patented Devices, Materials and Processes. 113
106.04 Federal Participation. 113
106.05 Sanitary, Health and Safety Provisions. 114
106.06 Public Convenience and Safety. 115
106.07 Railway-Highway Provisions. 116
106.08 Construction Over or Adjacent to Navigable Waters. 116
106.09 Barricades and Warning Signs. 116
106.10 Use of Explosives. 117
106.11 Protection and Restoration of Property and Landscape. 118
106.12 Responsibility for Damage Claims. 119
106.13 Indemnification and Insurance Requirements. 119
106.14 Use and Occupancy Prior to Acceptance by City. 121
106.15 Contractor's Responsibility for Work. 121
106.16 Contractor's Responsibility for Utility Property and Services. 122
106.17 Personal Liability of Public Officials. 123
106.18 No Waiver of Legal Rights. 123
106.19 Environmental Protection. 123
106.20 Hazardous Materials 123
106.21 No Third Party Beneficiary. 124
106.22 Civil Rights. 124
106.23 Assignment Provision. 125
SECTION 107 -- PROSECUTION AND PROGRESS 126
107.01 Subletting of Contract. 126
107.02 Notice to Proceed. 127
107.03 Preconstruction Activities 127
107.04 Prosecution and Progress. 127
107.05 Limitation of Operations. 128
107.06 Character of Employees. 128

107.07 Methods and Equipment. 129
107.08 Determination of Contract Time Extension. 130
107.09 Failure to Complete on Time. 134
107.10 Default of Contract. 134
107.11 Termination of Contractor's Responsibility. 135
107.12 Guaranty. 136
107.13 Understanding of Parties Regarding Department's Performance. 136
SECTION 108 -- MEASUREMENT AND PAYMENT 137
108.01 Measurement of Quantities. 137
108.02 Scope of Payment. 140
108.03 Compensation for Altered Quantities. 140
108.04 Extra Work, Payment for Revisions to the Contract. 140
108.05 Eliminated Items. 147
108.06 Partial Payments. 147
108.07 Payment for Material on Hand. 148
108.08 Payment for Material Not on Hand. 149
108.09 Semi-final and Final Payments. 149
III - TECHNICAL SPECIFICATIONS 151
DIVISION 200 – EARTHWORK 152
SECTION 201 - CLEARING AND GRUBBING 153
SECTION 202 -- REMOVAL OF STRUCTURES AND OBSTRUCTIONS 158
SECTION 203 --EXCAVATION AND EMBANKMENT 165
SECTION 206 --STRUCTURE EXCAVATION FOR PIPES AND OTHER MINOR STRUCTURES 187
SECTION 209 -- BEDDING & BACKFILL 197
SECTION 214 -- FINE GRADING 201
DIVISION 300 – BASE COURSES 203
SECTION 304 -- AGGREGATE BASE COURSE 204
SECTION 306 -- RECLAIMED STABILIZED BASE 214

DIVISION 400 - PAVEMENTS 217

SECTION 401 -- PLANT MIX PAVEMENTS - GENERAL 218
SECTION 403 -- HOT ASPHALT PAVEMENT 258
SECTION 404 --PAVEMENT RESTORATION.....260
SECTION 409 – FOG SEAL.....264
SECTION 410 – TACK COAT 269
SECTION 411 -- PLANT MIX SURFACE TREATMENT 272
SECTION 413 --HOT-POURED CRACK SEALANT.....275
SECTION 414 – MICRO-SURFACE SURFACE TREATMENT 280
SECTION 415 – CHIP SEAL.....290
SECTION 416 – CAPE SEAL TREATMENT 297
SECTION 417 -- COLD PLANING OF ASPHALT SURFACES 300
SECTION 418 – BONDED WEARING COURSE SURFACE TREATMENT 306

DIVISION 500 – STRUCTURES 315

SECTION 508– STRUCTURAL FILL 316
SECTION 520 -- PORTLAND CEMENT CONCRETE 319
SECTION 530 -- WATERPROOFING CONCRETE SURFACES.....351
SECTION 534 -- WATER REPELLENT 353
SECTION 538 -- BARRIER MEMBRANE.....355
SECTION 544 – REINFORCING STEEL.....361
SECTION 570 -- STONE MASONRY 365
SECTION 572 -- STONE WALL.....371
SECTION 583 – RIPRAP.....374
SECTION 585 -- STONE FILL.....378
SECTION 586 -- PLACING EXCAVATED ROCK 381
SECTION 593 – GEOTEXTILES.....382

DIVISION 600 – INCIDENTAL CONSTRUCTION.....389

SECTION 601 -- SANITARY SEWERS 390
SECTION 602 -- SANITARY SEWER MANHOLES 410
SECTION 603 -- STORM DRAINS 425

SECTION 604 --CATCH BASINS, DROP INLETS AND DRAIN MANHOLES 442
SECTION 605 -- UNDERDRAINS 462
SECTION 606 – GUARDRAIL 469
SECTION 607 – FENCES 490
SECTION 608 – SIDEWALKS 502
SECTION 609 -- CURBS 519
SECTION 610 -- DRIVEWAYS 531
SECTION 614 -- ELECTRICAL CONDUIT 537
SECTION 615 – TRAFFIC SIGNS 549
SECTION 616 -- TRAFFIC SIGNALS 554
SECTION 618 -- UNIFORMED OFFICERS AND FLAGGERS 577
SECTION 619-- MAINTENANCE OF TRAFFIC 580
SECTION 620 -- CALCIUM CHLORIDE 586
SECTION 622 -- BOUNDS 587
SECTION 625 – LIGHT POLE BASES 589
SECTION 628 -- SAWED PAVEMENT 591
SECTION 629 -- TESTING OF MATERIALS 593
SECTION 632 -- REFLECTORIZED PAVEMENT MARKINGS 597
SECTION 641 -- LOAM 614
SECTION 642 -- LIMESTONE 616
SECTION 643 -- FERTILIZER FOR GRASSES 618
SECTION 644 -- GRASS SEED 620
SECTION 645 – EROSION AND SEDIMENTATION CONTROL 627
SECTION 646 -- TURF ESTABLISHMENT 640
SECTION 647 -- HUMUS 642
SECTION 648 -- SOD 643
SECTION 650 -- PLANTING -- GENERAL 645
SECTION 651 -EVERGREEN TREES 660
SECTION 652 - DECIDUOUS TREES 662
SECTION 654 – EVERGREEN SHRUBS 664
SECTION 655 -- DECIDUOUS SHRUBS 666

SECTION 657 -- VINES AND GROUND COVERS 668
SECTION 658 --TRANSPLANTING PLANT MATERIAL 670
SECTION 692 -- MOBILIZATION 671

DIVISION 700 – MATERIALS 673

SECTION 702 – BITUMINIOUS MATERIALS 674
SECTION 703 -- AGGREGATES 676
SECTION 707 -- CEMENT MORTAR 677
SECTION 708 -- PAINTS 679

APPENDICES III-684

APPENDIX A - PERMIT FORMS III-685
APPENDIX B – STANDARD CONSTRUCTION FORMS III-692

INDEX III-697

LIST OF FIGURES

Page

Figure 2- 1-Typical Roadway Section 21
Figure 2-2 – Typical Cul-de-sac 22
Figure 2- 3 –Typical Temporary Turn-around 23
Figure 2- 4 – Mailbox Location Details. 24
Figure 5- 2 Moratorium Pavement Restoration 48
Figure 5- 3 Pavement Restoration – Concrete and Cobblestones 49
Figure 5- 4 Standard Trench Patch 50
Figure 5- 5 Temporary Patch 51
Figure 5- 6 Patch Identification ..... **Error! Bookmark not defined.**
Figure 206- 2 Rock Excavation For Pipes 194
Figure 206- 3 Trench Excavation Details for Pipe 195
Figure 206- 4 Pipe in Embankment 196
Figure 209- 1 Excavation Pay Limits for Trenches 200
Table 410- 1 Tack Coat Application Rates 270
Table 415- 1 Latex Additive Specification 290
Figure 520- 1 Thermocouple Locations 350
Figure 572- 1 Typical Stone Wall Details 373
Table 583- 1 Riprap Gradation 375
Figure 593- 1 Seam Repair Detail 387
Figure 593- 2 Incorrect Seam Repair 387
Figure 601- 1Typical Sewer Trench 404
Figure 601- 2 Sewer Service Connection Details 405
Figure 601- 3 Typical Sewer Service Cleanout 406
Figure 601- 4 Inside Drop Connection 407
Figure 601- 5 Strap for Inside Drop Connection 408
Figure 601- 6 Sewer Service Chimney 409
Figure 602- 1 Sanitary Sewer Manhole 417
Figure 602- 2 Manhole Boot Detail 418

Figure 602- 3 Gas Trap Detail 419
Figure 602- 3A Rectangular Gas Trap 420
Figure 602- 3B Gas Trap Outlet Pipe Support 421
Figure 602- 4 Grease Trap 422
Figure 602- 5 Typical Sewer Manhole Cover 423
Figure 602- 6 Locking Sewer Manhole Cover 424
Figure 603- 1 Mortar Rubble Headwall 433
Figure 603- 2 Concrete Headwall with Wingwalls 434
Figure 603- 3 Mortar Rubble Headwall with Wingwalls 435
Figure 603- 4 Concrete Headwall with Wingwalls 436
Figure 603- 5 Mortar Rubble Headwall with Wingwalls for Twin Pipes 437
Figure 603- 6 Mortar Rubble Headwall with Wingwalls for Twin Pipes 438
Figure 603- 7 Slope Rounding at Top of Headwall 439
Figure 603- 8a Outlet Protection Grates, Plate 1 440
Figure 603- 8b Outlet Protection Grates, Plate 2 441
Figure 604- 1 Drain Manhole 451
Figure 604- 2 Catch Basin 452
Figure 604- 3 Frame and Grate - Type "A" 453
Figure 604- 4 Frame and Grate-Type"B 454
Figure 604- 5 Catch Bsin Top - Type “C” 455
Figure 604- 6 Frame and Grate - Type "E" 456
Figure 604- 7 Frame and Grate - Type "F" 457
Figure 604- 8 Grading Near Gutterline Catch Basins 458
Figure 604- 9 Drain Manhole Frame and Cover 459
Figure 604- 10 Double Catch Basin Frame and Grate 460
Figure 604- 11 Polyethelyne Liners 461
Figure 605- 1 Underdrain Detail 467
Figure 605- 2 Underdrain Headwalls 468
Figure 606- 1 Guardrail Notes 482
Figure 606- 2 Standard Guardrail Splice 483
Figure 606- 3 Standard Guardrail Hardware 484

Figure 606- 4 Standard Guardrail Section 485
Figure 606- 5 Stair Handrail 486
Figure 606- 6 Ramp Handrail 487
Figure 606- 7 Ramp Handrail With Guard 488
Figure 606- 8 Safety Rail With Guard 489
Figure 607- 1 Chain Link Fence 496
Figure 607- 2 Chain Link Fencepost Assemblies 497
Figure 607- 3 Footings for Chain Link 498
Figure 607- 4 Chain Link Fence Post Dimensions 499
Figure 607- 5 Woven Wire Fence 500
Figure 607- 6 Woven Wire Fence Bracing Detail 501
Figure 607- 7 Woven Wire Fence Fastening Details 501
Figure 608- 1 Bituminous Sidewalk 513
Figure 608- 2 Concrete Sidewalk 514
Figure 608- 3 Brick Sidewalk 515
Figure 608- 4 Concrete Sidewalks with Brick Accents 516
Figure 608- 5 Corner Sidewalk Ramp 517
Figure 608-6 Perpendicular Sidewalk Ramp 518
Figure 609-1 Granite Curbing 526
Figure 609-2 Granite Slope Curbing 527
Figure 609-3 Radial Joints for Granite Sloped Curb 528
Figure 609-4 Granite Curb Inlets 529
Figure 609-5 Bituminous Curbing 530
Figure 610- 1 Typical Driveway Profile 534
Figure 610- 2 Residential Driveway Details 535
Figure 610- 3 Bituminous Driveway Cross Section 536
Figure 610- 4 Concrete Driveway Cross Section 536
Figure 614- 1 Conduit Installation 545
Figure 614- 2 Concrete Pull Box 546
Figure 614- 3 Molded Pull Box 547
Figure 614- 4 Pull Box / Light Base Placement 548

Figure 615- 1 Post Mounted Sign 553
Figure 616- 1 Standard Foundation for Traffic Signal Post 568
Figure 616- 1a Meter Pedestal 569
Figure 616- 2 Controller Cabinet Foundation 570
Figure 616- 3 Signal Mast Arm Foundation Plan 571
Figure 616- 4a Foundation Steel Reinforcement Schedule 572
Figure 616- 4b Typical Quantites per Foundation 572
Figure 616- 4c Standard Traffic Signal Foundation Sizing 572
Figure 616- 4d Traffic Signal Foundation General Notes 573
Figure 616- 5 Signal Detector Loop Lead In, Stage 1 574
Figure 616- 6 Signal Detector Loop Lead In, Stage 2 575
Figure 616- 7 Signal Detector Loop 576
Figure 632- 1 Do Not Block Pavement Marking 607
Figure 632- 2 Typical Crosswalk Pavement Marking 608
Figure 632- 3 Pavement Line Layout 609
Figure 632- 4 Word Pavement Markings 610
Figure 632- 5 Arrow Pavement Markings 611
Figure 632- 6 Bike and Rail Pavement Markings 612
Figure 632- 7 Railroad Marking Layout 613
Figure 645- 1 Gravel Inlet Filter 637
Figure 645- 2 Silt Fence 638
Figure 645- 3 Sediment Control Bag For Catch Basin 639
Figure 651- 1 Evergreen Tree Planting 661
Figure 652- 1 Deciduous Tree Planting 663
Figure 654- 1 Evergreen Shrub Planting 665
Figure 655- 1 Deciduous Shrub Planting 667
Figure 657- 1 Ground Cover Planting 669

LIST OF PAY ITEM TABLES

Page

Pay Items and Units, Section 201 - Clearing And Grubbing 157
Pay Items and Units, Section 202 -- Removal Of Structures And Obstructions 164
Pay Items and Units, Section 203 --Excavation And Embankment: 186
Pay Items and Units, Section 206 --Structure Excavation For Pipes & Other Minor Struct. 192
Pay Items and Units, Section 209 -- Bedding & Backfill 199
Pay Items and Units, Section 214 -- Fine Grading 202
Pay Items and Units, Section 304 -- Aggregate Base Course 210
Pay Items and Units, Section 306 -- Reclaimed Stabilized Base 216
Pay Items and Units, Section 403 -- Hot Asphalt Pavement 259
Pay Items and Units, Section 404 --Pavement Restoration: 263
Pay Items and Units, Section 409 – Fog Seal 268
Pay Items and Units, Section 410 – Tack Coat 271
Pay Items and Units, Section 411 -- Plant Mix Surface Treatment 274
Pay Items and Units, Section 413 --Hot-Poured Crack Sealant 279
Pay Items and Units, Section 414 – Micro-Surface Surface Treatment: 289
Pay Items and Units, Section 415 – Chip Seal: 296
Pay Items and Units, Section 416 – Cape Seal Treatment 299
Pay Items and Units, Section 417 -- Cold Planing Of Asphalt Surfaces 305
Pay Items and Units, Section 418 – Bonded Wearing Course Surface Treatment 314
Pay Items and Units, Section 508– Structural Fill 318
Pay Items and Units, Section 520 -- Portland Cement Concrete 349
Pay Items and Units, Section 530 -- Waterproofing Concrete Surfaces 352
Pay Items and Units, Section 534 -- Water Repellent 354
Pay Items and Units, Section 538 -- Barrier Membrane 360
Pay Items and Units, Section 544 – Reinforcing Steel 364
Pay Items and Units, Section 570 -- Stone Masonry 370
Pay Items and Units, Section 572 -- Stone Wall 372
Pay Items and Units, Section 583 – Riprap 377

Pay Items and Units, Section 585 -- Stone Fill 380
Pay Items and Units, Section 586 -- Placing Excavated Rock 381
Pay Items and Units, Section 593 – Geotextiles 388
Pay Items and Units, Section 601 -- Sanitary Sewers 398
Pay Items and Units, Section 602 -- Sanitary Sewer Manholes 416
Pay Items and Units, Section 603 -- Storm Drains 431
Pay Items and Units, Section 604 --Catch Basins, Drop Inlets And Drain Manholes 450
Pay Items and Units, Section 605 -- Underdrains 465
Pay Items and Units, Section 606 – Guardrail 480
Pay Items and Units, Section 607 – Fences 494
Pay Items and Units, Section 608 – Sidewalks 512
Pay Items and Units, Section 609 -- Curbs 524
Pay Items and Units, Section 610 -- Driveways 533
Pay Items and Units, Section 614 -- Electrical Conduit 543
Pay Items and Units, Section 615 – Traffic Signs 552
Pay Items and Units, Section 616 -- Traffic Signals 567
Pay Items and Units, Section 618 -- Uniformed Officers And Flaggers 579
Pay Items and Units, Section 619-- Maintenance Of Traffic 585
Pay Items and Units, Section 620 -- Calcium Chloride 586
Pay Items and Units, Section 622 -- Bounds 588
Pay Items and Units, Section 628 -- Sawed Pavement 592
Pay Items and Units, Section 629 -- Testing Of Materials 596
Pay Items and Units, Section 632 -- Reflectorized Pavement Markings 605
Pay Items and Units, Section 641 -- Loam 615
Pay Items and Units, Section 642 -- Limestone 617
Pay Items and Units, Section 643 -- Fertilizer For Grasses 619
Pay Items and Units, Section 644 -- Grass Seed 626
Pay Items and Units, Section 645 – Erosion And Sedimentation Control 636
Pay Items and Units, Section 646 -- Turf Establishment 641
Pay Items and Units, Section 647 -- Humus 642
Pay Items and Units, Section 648 -- Sod 644

Pay Items and Units, Section 650 -- Planting -- General 659
Pay Items and Units, Section 651 -Evergreen Trees 660
Pay Items and Units, Section 652 - Deciduous Trees 662
Pay Items and Units, Section 654 – Evergreen Shrubs 664
Pay Items and Units, Section 655 -- Deciduous Shrubs 666
Pay Items and Units, Section 657 -- Vines And Ground Covers 668
Pay Items and Units, Section 658 --Transplanting Plant Material 670
Pay Items and Units, Section 692 -- Mobilization 672

DEFINITIONS AND TERMS

General. The titles and headings of the Sections, Subsections and Subparts herein are intended for convenience of reference and shall not be considered as having bearing on their interpretation.

When a publication is specified, it refers to the most recent date of issue, including interim publications, prior to the date of receipt of bid for the Project unless the issue as of a specific date or year is provided for**.**

Whenever the following abbreviations, terms or pronouns are used the Contract, the intent and meaning shall be interpreted as follows:

Abbreviations:

AAN	American Association of Nurserymen
AAR	Association of American Railroads
AASHTO	American Association of State Highway and Transportation Officials
ACI	American Concrete Institute
AGC	Associated General Contractors of America
AIA	American Institute of Architects
AISC	American Institute of Steel Construction
AISI	American Iron and Steel Institute
AMRL	AASHTO Materials Reference Laboratory
ANSI	American National Standards Institute
ARA	American Railway Association
AREMA	American Railway Engineering Maintenance-of-Way Association
ASCE	American Society of Civil Engineers
ASLA	American Society of Landscape Architects
ASME	American Society of Mechanical Engineers
ASTM	American Society of Testing and Materials
AWPA	American Wood Protection Association
AWWA	American Water Works Association
AWS	American Welding Society
CDBG	Community Development Block Grant Program
CFR	Code of Federal Regulations
CGP	Construction General Permit
CPM	Critical Path Method
EPA	Environmental Protection Agency
FHWA	Federal Highway Administration
FSS	Federal Specifications & Standards, General Services Administration
HUD	United States Department of Housing and Urban Development
LRFD	Load and Resistance Factor Design
MUTCD	Manual on Uniform Traffic Control Devices
NEC	National Electric Code
NEMA	National Electrical Manufacturers Association
NETTCP	North East Transportation Technician Certification Program

NTPEP	National Transportation Product Evaluation Program
NHDOT	The State of New Hampshire Department of Transportation
NHDES	The State of New Hampshire Department of Environmental Services
NIST	National Institute of Standards and Technology (formerly National Bureau of Standards)
NPDES	National Pollutant Discharge Elimination System
OSHA	Occupational Safety and Health Administration
QPL	State of New Hampshire, Department of Transportation, Qualified Products List
RSA	The New Hampshire Revised Statutes Annotated, 1955 together with all revisions amending same to date of invitation for bids
SAE	Society of Automotive Engineers
SSPC	Society for Protective Coatings (formerly Steel Structures Painting Council)
UL	Underwriter's Laboratory
USACOE	United States Army Corps of Engineers
WUC	Western Underground Committee

Acceptance. The formal written acceptance by the Director of Public Works of an entire contract or subdivision/site plan improvements which have been completed in all respects in accordance with the Plans and Specifications and any modifications previously approved.

Final Acceptance. The formal written acceptance by the Director indicating that the Contractor has complied with all requirements of the Contract and it has been completed in all respects**.**

Act of God. An unusual, sudden and unexpected manifestation of the forces of nature, the effect of which could not have been prevented by reasonable human foresight, pains and care.

Actual Cost. The cost actually incurred by the Contractor in the performance of work. Actual costs include labor, materials, actual ownership cost of equipment or invoiced rental rates, and administrative overhead.

Addenda. Contract revisions before the bid opening and before opening proposals to the contract documents, drawings and specifications by additions, deletions, clarifications or corrections.

Advertisement. See Invitation for Bids.

Allowance. Predetermined unit cost and total cost that is entered for an item on the Bid Schedule that applies to all Proposals submitted and Bidders are prohibited from altering. The amount shall be used for payment of actual Contractor costs (without markup) for material, labor, etc. incurred to perform the work required under the specific bid item.

Angle of Crossing. The right or acute angle formed by the intersection of the center line of the upper roadway with a line parallel to the face of the abutment of a bridge or with the center line of a culvert.

DEFINITIONS AND TERMS

Approved Material. Material Approved by the Engineer for use in the work.

Award. The acceptance of a proposal by the Department.

Base Course. The layer or layers specified or selected material of designed thickness placed on a properly prepared subbase or a subgrade to support a surface course.

Bidder. An individual, partnership, firm, corporation or any combination thereof, or joint venture, submitting a Proposal.

Bid Bond. See Proposal Guaranty

Bid (Item Bid). A price submitted by a Bidder for a contract pay item contained in the proposal.

Bid (Total). The total dollar amount of the proposal.

Bid Schedule. The schedule included in the Proposal, containing the estimated quantities of contract pay items for which Item Bid Prices are invited.

Board. The City of Manchester Board of Mayor and Aldermen.

Bridge. As provided by RSA 234:2, a structure having a clear span of 10 feet or more measured along the center line of the roadway at the elevation of the bridge seats, spanning a water course or other opening or obstruction.

Bicycle Lane. A portion of a roadway which is separated from traffic lanes by the use of a solid white stripe on the pavement and has been designated for preferential use by bicyclists.

Business Day. Any day excluding Saturday, Sunday, and legal holidays recognized by the City.

Calendar Day. A day shown on the calendar.

Cement. Unless otherwise designated, this term will refer to Portland Cement.

Certificate of Compliance. A document in the format prescribed in the Contract certifying that material incorporated in the Work complies with the Contract.

Change Order. A revision to the Contract issued after Award. The Change Order establishes the increase or decrease to the Contract Quantities, Contract Amount or Contract Time, if any.

City. The City of Manchester, New Hampshire.

Commissioners. The Commissioners of the Department of Highways.

Complete in Place. All work indicated to be performed as part of the contract item except as may be otherwise specified under the Method of Measurement or Basis of Payment.

Complete Streets. A transportation policy and design approach that requires streets to be planned, designed, operated, and maintained to enable safe, convenient and comfortable travel and access for users of all ages and abilities regardless of their mode of transportation.

Completion (Project). Completion of the Project occurs when the Contractor has completed all work required by the Contract and has satisfactorily executed and delivered to the Engineer all documents, certificates and proofs of compliance required by the Contract, and has received Final Acceptance from the Department.

Conduit. Unless the connotation is to the contrary, a tube intended to carry electrical or other utilities.

Construction Zone. A zone or area of work as depicted on the Contract Drawings.

Contract. The written agreement between the State and the Contractor setting forth the obligations of the parties thereunder, including, but not limited to, the performance of the work and the basis of payment.

The Contract may include and not be limited to: the Invitation for Bids, Proposal, Contract Form, Proposal Guaranty, Standard Specifications, Supplemental Specifications, Special Provisions, Prosecution of Work, Traffic Control Plan, Special Attentions, general and detailed Plans, Working Drawings submitted for approval and accepted, and Change Orders, and authorized extensions to the Contract time.

1. The **Proposal Form**. The prescribed form on which the Department requires the Bid to be submitted. See 101.12. The completed Proposal Form becomes part of the Contract upon award and execution of the Contract and includes the following:

2. **Proposal.** The Proposal Form as returned and submitted by the Contractor and containing the Contractor's Bid. The Proposal includes or states:

    a. the location and description of the project;
    b. the Bid Schedule;
    c. the **Completion Date**, the date on which specific work; or the Contract is specified to be completed ;
    d. the amount of the Bid Bond;
    e. the date, time, and place of the opening of bids;

3. **Proposal Guaranty.** The security furnished with a Proposal to guaranty that the Bidder will enter into the Contract if the Proposal is accepted. See 101.09.

4. **Agreements.** Documents of agreement between the Department and third parties that pertain to the use of land, water, materials, and other resources.

5. **Federal Contract Provisions.** Provisions required on Federal funded projects:

a. HUD Supplementary General Conditions.
b. Davis-Bacon Wage Rates

6. **Specifications.** The compilation of Standard Specifications, Supplemental Specifications, Special Provisions, Special Attentions, and other requirements for the performance of prescribed work, including:

   a. **Prosecution of Work.** Specific requirements and information unique to the Project, including the final and any intermediate completion dates.
   b. **Traffic Control Plan.** Specific requirements and procedures for controlling traffic during the course of construction. It also allows the Contractor to submit for approval variations of such plan.
   c. **Special Attentions.** Notices calling bidders‟ attention to issues applicable to an individual project.
   d. **Special Provisions.** Additions and revisions to the standard and supplementary specifications applicable to an individual project.
   e. **Supplemental Specifications.** Revisions to the Standard Specifications.
   f. **Standard Specifications.** The current edition of this book ("City of Manchester, Department of Highways, Standard Specifications for Road, Drain and Sewer Construction") approved for general application and repetitive use.

7. **Plans.** The approved drawings (or exact reproductions) showing the locations, character, dimensions, and details of the project. As appropriate, plans include:

   a. **Plan and Profile Sheets.** Sheets showing the alignment of the centerline, the profile of the existing and proposed terrain on that centerline, and other project information.
   b. **Typical Sections**. A section showing the slope criteria for the roadway cut-and-fill slopes, the crown or cross-slope of the finished roadway, the final pavement widths, and the thicknesses of base material and surfacing courses.
   c. **Summary Sheets.** Sheets indicating the general notes, materials and rates information, and quantities and locations for pay items included in the Contract.
   d. **Project Specific Detail Sheets.** Details that supplement the plan and profile sheets and provide material, earthwork, or other project specific information.

8. **Addenda.** Contract Revisions issued after advertisement and before the opening of bids.

9. **Notice to Proceed.** Written authorization from the Department to the Contractor to start work on the project.

10. **Working Drawings for Approval.** Drawings, diagrams, illustrations, schedules, calculations, or other supplemental forms of information for physical items permanently incorporated in the project that the Department requires the Contractor to submit for approval and approved in accordance with 104.02.

11. Contract Revision. A written change to the Contract in accordance with 103.02.

Contract Bond. The approved form of security in compliance with RSA 447:16 executed by the Contractor and his Surety or Sureties, guaranteeing complete execution of the contract and all supplemental agreements pertaining thereto and the payment of all legal debts pertaining to the construction of the project.

Contract Time. The time allowed for completion of the contract, including authorized time extensions. See 107.08.

Contract Pay Item. A specifically described item for which a price is provided in the Proposal.

Contractor. The individual, partnership, firm, corporation or any combination thereof, or joint venture, contracting with the Department for performance of prescribed work. Said person or persons, acting directly or indirectly through and authorized agent of employee, shall be designated as the party of the second part to the contract.

Contractor's Option. A provision where the Contractor may select certain specified materials, methods, or systems at his own option, without change in the Contract cost.

Controlled Access Highway. See Right-of-Way Terms.

Critical Path. The longest continuous sequence of work for which the combined duration of the work's individual scheduled activities produces the minimum overall project duration. Activities on the critical path that control the project's completion:

a. **Critical Activity.**Any activity on the critical path
b. **Controlling Activity.** A Critical Activity that would normally be in progress at a given moment.
c. **Milestone.** Fixed date marking the beginning or end of specific work; phases of work; or completion date(s) as specified in the Contract.

Cul-De-Sac. A local street open at one end only and with special provision for turning around.

Culvert. Any structure not classified as a bridge which provides an opening under any roadway.

Day. Unless designated as a working day, this term will mean a calendar day.

Delay. Any event, action, force, or factor that would cause the established Contract Time to be exceeded for performance of the Contract. See 107.08.

a. **Compensable Delay**. An excusable delay for which the Contractor may be entitled to compensation.

b. **Excusable Delay.** A delay beyond the Contractor's control and not caused by the Contractor's fault or negligence, which the Contractor could not have reasonably foreseen, and for which a Contract extension may be granted.

c. **Noncompensable Delay**. Excusable delay for which the Contractor may be entitled to an extension of time but no additional compensation.

d. **Nonexcusable Delay**. A delay that was reasonably foreseeable and within control of the Contractor for which no compensation or time extension will be granted.

Department. The City of Manchester, New Hampshire, Department of Public Works, designated as the party of the first part to the contract.

Differing Site Conditions. See 103.02 (B).

Director. The Public Works Director of the City of Manchester, New Hampshire Department of Public Works.

Drive and Entrance. See Right-of-Way Terms.

Easement. A right acquired by public authority to use or control property for a designated purpose.

Engineer. The Director of Public Works either acting directly or through any duly authorized representatives.

Equipment. All machinery and equipment together with the necessary supplies for upkeep and maintenance, and also all tools and apparatus necessary for the proper construction and acceptable completion of the work.

Erosion. "Wearing away of land by running water, waves, wind, ice, abrasion, and transportation." (New Hampshire Stormwater Manual (Published by NH Department of Environmental Services)).

Expression: By or to the Engineer. In order to avoid cumbersome and confusing repetition of expressions in these specifications, it is hereby provided that any and all of the following words or any form of such words, unless clearly indicated otherwise, shall be understood to be followed by the words "by the Engineer" or "to the Engineer":
Accepted, approved, authorized, condemned, considered or deemed necessary, contemplated, designated, determined, directed, disapproved, established, given, indicated, insufficient, ordered, permitted, rejected, required, reserved, satisfactory, specified, sufficient, suitable, suspended, unacceptable, unsatisfactory.

Extra Work. Work not provided for in the contract as awarded but found by the Engineer to be essential to the satisfactory completion of the contract within its intended scope. Such extra work may be performed at bid prices, agreed prices (Supplementary Agreement), or on a force account basis. See III, 103.03.

Floodplain. A nearly flat, alluvial lowland bordering a stream, that is subject to inundation by floods.

Floodway. Channel of a stream plus any adjacent flood plain areas that must be kept free of encroachment in order that the 100 year flood be carried without increases in flood heights of up to a maximum of 1.0 foot

Force Account. A basis of payment for the directed performance of work with payment based on the actual cost for labor, materials and equipment with consideration for overhead and profit.

Hazardous Material (toxic waste). Material as defined by RSA 147-A**.**

Highway, Street, or Road. A public way designated for purposes of vehicular travel or vehicular and pedestrian travel, including the entire area within the right-of-way.

Holidays. In the City of Manchester, legal holidays occur:

January 1st (New Year's Day)
Martin Luther King Jr. Civil Right's Day
The third Monday in February (President's Day)
Last Monday in May (Memorial Day)
July 4th (Independence Day)
The first Monday in September (Labor Day)
The second Monday in October (Columbus Day)
The first Tuesday in November (Election Day)
November 11th (Veteran's Day)
Thanksgiving Day
Christmas Day

If any holiday listed above falls on Sunday, the following Monday shall be considered a holiday. If any holiday listed above falls on Saturday, the preceding Friday shall be considered a holiday

Inspector. The Engineer's authorized representative assigned to make observations of the Work.

Invasive Species. An alien species whose introduction caused or is likely to cause economic or environmental harm or harm to human health (RSA 430:52 VII).

Invitation for Bids. The advertisement for Proposals for Work or Materials on which bids are requested. The advertisement will indicate the time and place of the opening of Proposals, the type and location of work to be performed, the character and quantity of the material to be furnished and provide information on how to obtain Plans, Specifications and Proposal forms.

Item Numbers and Section Numbers. In these specifications, items are numbered to correspond to sections. Each item shall be constructed in accordance with the specifications contained in the corresponding section. The section numbers are intended for convenience of reference only and shall not be considered as having any bearing on the interpretation thereof.

In case of discrepancy between what the numbers for the items would indicate and the item as written in words, the item written in words shall govern.

Laboratory. Any testing laboratory which may be designated or approved by the Engineer.

Lane. The portion of the traveled way for the movement of a single line of vehicles.

Limited Access Highway. See Right-of-Way terms.

Limits of Construction. An area with established boundaries, identified within the highway right-of-way or construction easements, where the construction is permitted.
Loam. Topsoil suitable for use in seeding and planting. See Section 641 -- Loam

Longitudinal. In general, a direction parallel to the centerline of the road

Lump Sum. A single amount basis of payment for a complete Contract item as defined in the Specifications. Such payment shall be deemed full compensation for the items of work and all work appurtenant thereto.

Major and Minor Contract Items. Major items shall be the three (3) highest total dollar bid items, excluding Item 692 – Mobilization, Lump Sum bid items and Allowance based bid items. All other Contract items are to be considered as Minor Items.

Materials. Any substances specified for use in the construction of the project and its appurtenances.

Median. That portion of a divided highway separating the traveled ways for traffic in opposite directions.

Non-Participating Item. As used on the plans for Federal Aid projects, an item in which the cost is not shared by the Federal Government.

Notice to Proceed. Written notice to the Contractor designating the official start time of the contract and directing him to proceed with the Contract work.

Operational Construction Signs. Warning signs used to advise and guide motorists through or around areas within a construction zone. Typically these signs are mounted on portable supports for short-term, short-duration, and mobile conditions.

Pavement Structure. The combination of base and surface courses placed on a subgrade to support the traffic load and distribute it to the roadbed.

Permanent Construction Signs. Warning signs used to advise motorists approaching a construction zone. Typically, these signs are mounted on posts and are in place for the duration of the project.

Plans. The contract drawings or reproductions thereof, which show the location, character, dimensions and details of the prescribed work, including all alterations thereof permissible under the contract and authorized by duly approved written orders.

Points of Access. See Right-of-Way terms.

Prequalification Statement. A completed form on which the Contractor has furnished information as to his ability to perform and finance the work. See 101.01.

Prime Contractor. The Contractor as defined above.

Project. The specific area of the work together with all appurtenances to be constructed under the contract. This shall include stockpile and staging areas.

Proposal. The offer of a Bidder on the proposal form, to perform the prescribed work at the prices quoted.

Proposal Form. The prescribed form on which the Department requires bids to be submitted. See 101.02.

Proposal Guaranty. The security furnished with a bid to guarantee that the Bidder will enter into the contract if his bid is accepted.

Qualified Products List (QPL). A list of products meeting requirements for specified materials to be incorporated into the Work. The list is maintained and updated yearly by the New Hampshire Department of Transportation, Bureau of Materials and Research.

Responsive Proposal . A Bid Proposal that meets all the requirements of the Invitation to Bid.

Responsible Bidder. A Bidder that the Department determines has the ability to perform the requirements of the Contract.

Right-of-Way. A general term denoting land, property or interest therein, usually in a strip acquired for or devoted to transportation purposes.

Right-of-Way Terms:

> **Limited Access Highway.** A highway laid out under the provisions of RSA 230:45and to which all ingress or egress from abutting tracts of land is prohibited after completion of the work.
>
> **Controlled Access Highway.** A highway laid out under the provisions of RSA 230:45 and to which ingress and egress from abutting tracts of land may be permitted.
>
> **Point of Access.** An opening in the right-of-way line through which ingress and egress from the highway to abutting tracts of land may be made. RSA 236:13.
>
> **Drive and Entrance.** The roadway over which a vehicle must operate for ingress and egress from the highway to abutting tracts of land.

Road. See Highway.

Roadbed. The graded portion of a highway prepared as a foundation for the pavement structure and shoulders.

Roadside. A general term denoting the area adjoining the outer edge of the roadway. Extensive areas between the roadways of a divided highway may also be considered roadside.

Roadside Development. Those items necessary for the preservation or replacement of landscape materials and features that may include suitable plantings and other improvement or ground cover to preserve and enhance the appearance and stability of the highway right of way or acquired easements.

Roadway. The portion of a highway within the limits of construction.

Rock. Where used in these specifications, this term shall be construed to mean igneous, metamorphic or sedimentary rock.

Sieve. U.S.A. Standard Sieve, as defined in AASHTO M 92. Measure percent passing sieve by weight.

Shoulder. The portion of the roadway contiguous with the traveled way for lateral support of base and surface courses and for accommodation of stopped vehicles, for emergency use.

Sidewalk. That portion of the roadway primarily constructed for the use of pedestrians.

Solid Waste. Shall mean material as defined by RSA 149-M

Specified Completion Date. The date on which the contract work is specified to be completed.

Standardized Plant Names. The official Code of Standardized Plant Names of the American Joint Committee on Horticultural Nomenclature.

State. The State of New Hampshire.

Street. See Highway.

Structures. Bridges, conduits, culverts, catch basins, drop inlets, retaining walls, cribbing, manholes, headwalls, end sections, buildings, sewers, service pipes, underdrains and other features which may be encountered in the work and not otherwise classed herein.

Stump. The part of a tree remaining in the earth after the stem or trunk falls or is cut off, a standard tree trunk from which the upper part and the branches have been removed.

Subbase. Layers of specified material thickness placed on a subgrade to support a base course.

Subcontractor. An individual, partnership, firm, corporation or any combination thereof, or joint venture, to whom the Contractor sublets any part of the Contract.

Subgrade. The top surface of a roadbed upon which the pavement structure and shoulders are constructed.

Subsidiary and Subsidiary Item. These terms are used to indicate work for which no direct payment will be made. Such work is considered to be incidental to items having contract prices and the bid prices submitted by the Contractor, shall be sufficient to absorb the cost of all work designated as subsidiary or as subsidiary items.

Substructure. All of that part of a bridge below the bearings of simple and continuous spans, skewbacks of arches and tops of footings of rigid frames, together with the backwalls and wingwalls.

Superintendent. The Contractor's authorized representative in responsible charge of the work.

Superstructure. The entire bridge except the substructure.

Surcharge. Temporary load placed for the purpose of consolidating the underlying soil.

Supplementary Agreement. A written agreement executed by the Contractor and the Department covering the performance of work not included in the original contract.

Surety. The corporation, partnership or individual other than the Contractor, executing a bond furnished by the Contractor.

Topsoil. The surface layer of soil and sod encountered during construction.

Traffic. The movement of vehicles, pedestrians, animals, and any other conveyance either singly or together through an area of the project or along a route.

Traffic Control Devices. As defined in the MUTCD all signs, signals, markings, and devices placed on, over or adjacent to a street or highway by authority of a public body or official having jurisdiction to regulate, warn, or guide traffic.

Traffic Control Plan. See paragraph 6b under definition for “Contract”

Traffic Lane. See Lane.

Traffic Manual. The edition of the “Manual on Uniform Traffic Control Devices for Streets and Highways” current on the date of advertisement for bids; which manual is approved by the Federal Highway Administrator as the national standard for all highways open to the public travel.

Transverse. In general, a direction perpendicular to the centerline of the road

Traveled Way. The portion of the roadway provided for the movement of vehicles, exclusive of shoulders.

Unbalanced Bid, Materially. A Bid that generates a reasonable doubt that award to the Bidder submitting a mathematically unbalanced bid will result in the lowest ultimate cost to the Department.

Unbalanced Bid, Mathematically. A Bid containing unit bid items that do not reflect reasonable costs plus a reasonable proportionate share of the bidder's anticipated profit, overhead costs, and other indirect costs.

Wear. The percent of wear of aggregate as determined by the AASHTO T 96 (Los Angeles Abrasion Test). The grading shall be Grading A, unless otherwise specified.

Weighmaster. An individual licensed by the Commissioner of Agriculture of New Hampshire as a licensed public weighmaster.

Wetland "An area that is inundated or saturated by surface or ground water at a frequency and duration sufficient to support and that under normal conditions does support, a prevalence of vegetation typically adapted for life in saturated soil conditions. Wetlands include, but are not limited to swamps, marshes, bogs, and similar areas." (NH Code of Administrative Rules, Chapter Wt 101.87, 1997)

Work. The furnishing of all labor, materials, equipment and incidentals necessary or convenient to the successful completion of the project and the carrying out of the duties and obligations imposed by the contract.

Working Day. A calendar day during which construction operations could proceed for a major part of a shift; normally excludes Saturdays, Sundays and legal holidays recognized by the City, and the period between November 15 to April 1 inclusive.

Working Drawings. Stress sheets, shop drawings, erection plans, falsework plans, framework plans, cofferdam plans, bending diagrams for reinforcing steel, or any other supplementary plans or similar data which the Contractor is required to submit for approval.

CITY OF MANCHESTER
DEPARTMENT OF PUBLIC WORKS

PART I -PUBLIC IMPROVEMENTS, EXCAVATION AND PERMITING

SECTION 1 - GENERAL REQUIREMENTS

1.1 One (1) sets of plans and specifications for all public improvement work involving roadways, sewers, drains, sidewalks, etc. shall be submitted to the Department of Public Works for review. When necessary, one (1) additional set of plans shall be furnished for submission to the Division of Water Supply & Pollution Control, State of NH Department of Environmental Services.

1.2 Plans and specifications relative to public improvements included in site development and subdivision projects shall be submitted to the Department of Public Works through the City of Manchester Planning Board. One set of plans and specifications shall also be provided to respective utility companies for their review as necessary.

1.3 Site development and subdivision plans shall conform to the requirements of the City of Manchester Subdivision and Site Plan Regulations.

1.4 A federal storm water discharge permit must be obtained for all construction activity that disturbs one or more acres of land. This includes the submission of a Notice of Intent (NOI) to the EPA before the start of construction, and preparation a Storm Water Pollution Prevention Plan (SWPPP) to be kept onsite. After the project is complete, a Notice of Termination must be filed to the EPA.

1.5 All plans, specifications and calculations shall be prepared by a professional engineer currently licensed in the State of New Hampshire and shall be appropriately stamped.

1.6 All public improvement work shall conform to the requirements of the following agencies, where applicable.

- American Association of State Highway & Transportation Officials (AASHTO)

- United States Environmental Protection Agency (EPA)

- State of New Hampshire
- Department of Transportation
- Department of Environmental Services

- City of Manchester
- Department of Public Works
- Planning Board
- Planning and Community Development
- Water Works

1.7 All public improvements shall be constructed according to the City of Manchester, Department of Public Works Standard Specifications for Road, Sewer and Drain Construction. This shall be noted on the plans.

1.8 Any change in or variation from the Department of Public Works Standard Specifications shall be submitted for review and approval.

1.9 Construction Plans.

1.9.5 Construction plans for all public improvements shall contain all horizontal and vertical data necessary for the construction of the roadway, drainage facilities and public utilities.

1.9.6 Plan sheet size shall be 34 inches by 22 inches. All plans required to be recorded at the Hillsborough County Registry of Deeds shall meet the requirements of the Registry.

1.9.7 Plan scale shall be either 1"=20' or 1"=40'.

1.9.8 The horizontal scale of profiles shall correspond to the plan scale. For twenty-scale plans, the vertical scale shall be 1"=2'. For forty-scale plans, the vertical scale shall be 1"=4'.

1.9.9 Cross section scales shall be 1"=5'.

1.10 Vertical granite curbing shall be required for all public roadways.

1.11 All public utilities within the limits of the roadway shall be laid out according to the requirements of the governing utility authority.

1.12 Upon final acceptance and approval by the City of Manchester Planning Board, two (2) complete sets of site development or subdivision plans shall be furnished to the Department of Public Works.

1.13 Upon final completion and acceptance of the public improvement work, one complete set of mylar "as-built" plans shall be submitted. Plans shall be prepared by a professional engineer or land surveyor currently licensed in the State of NH. The as-built drawings shall incorporate the following:

- Final road grades and elevations
- Drainage structures and sewers shown on the plan and profile views.
- Edges of pavements and curbing shown on the plan view.
- All drainage structures should be shown on the plans with Rim, Invert and Sump information. Rims should be reported to the nearest 0.1’ and Inverts and Sumps to the nearest 0.01’.
- All sewer structures identified by station and offset. Inverts shall be shown to the nearest 0.01’ and the Rims to the nearest 0.1’.
- The type, size and slopes of all pipes shall be shown.
- All structures shall be identified by station and offset.
- Ties to all sewer services shall be provided.
- Final location and topography of all treatment swales, detention ponds and other storm water treatment devices shall be shown.

- All easements should be clearly shown and defined.

- If possible, as-built plans should show both the original design and the final design. For example, if structure location, inverts, roadway grades, etc. have significantly deviated from the original design, the old data shall be crossed or grayed out and new data shall be shown.

1.14 A digital copy of the plans described in item 1.13 in the current release of "Autocad" (or in a format that can be readily converted to Autocad or in any other equivalent file format that is acceptable to the Department of Public Works) shall be submitted. The file shall incorporate the following:

- Digital project files shall be based on N.H. State Plane Coordinate System;

- Vertical Datum shall be N.V.D. 1988.

- Submissions shall be made via attachment to electronic mail, or other means acceptable to the Department.

SECTION 2 -- ROADWAY REQUIREMENTS

2.1 General

2.1.1 The typical cross section of new roadways shall conform to Figure 2- 1.

2.2 Horizontal Alignment

2.2.1 The alignment design shall be consistent with acceptable engineering practices and should be such that the safety of the facility is not compromised. Every effort should be made to meet the requirements for a minimum design speed of 30 m.p.h.

2.2.1.1 Street curves shall be designed with as large a radius as feasible, the minimum radius being 200 feet.

2.2.1.2 Minimum tangent length between reverse curves shall be 100 feet.

2.2.1.3 Streets shall preferably intersect at a 90 degree angle, but in no case, less than 70 degrees.

2.2.1.4 No more than two proposed streets shall intersect at any one location. Closely spaced offset intersections shall also be avoided.

2.2.1.5 Right-of-way bounds shall be required at all angle points, at the PC and PT points of all curves and at the PC and PT points of right-of-way radii at intersections. Bounds shall conform to Section 622 of the Standard Specifications.

2.2.2 At street intersections, the minimum radius of curb return where curbs are used or the outside edge of pavement where curbs are not used, shall be 25 feet.

2.2.2.1 The minimum right-of-way radii at intersections shall be 18 feet.

2.2.2.2 Calculations for all season safe sight distance may be required for intersections and changes in alignment on a case-by-case basis. Sight distance analysis shall be as outlined in "A Policy on Geometric Design of Highways and Streets 1984", as amended and published by AASHTO.

2.2.3 Cul-de-sacs shall be of the circular, all-paved type and shall have a minimum curb radius of 50 feet (See Figure 2-2).

2.2.3.1 Maximum length of cul-de-sac streets shall be 1000 feet as measured from edge of right-of-way of the intersected street to the radius point of the cul-de-sac.

2.2.3.2 Turnarounds other than the specified cul-de-sac will be allowed only as a temporary measure (See Figure 2- 3).

2.3 Vertical Alignment

2.3.1 Grades shall be no flatter than 0.75 percent. Desirable maximum grades shall be 6 percent with an absolute maximum of 9 percent.

2.3.1.1 Except for stop conditions at intersections, the minimum K values for vertical curves shall be 40 for sags and 30 for crests. The length of vertical curve and corresponding K value shall be shown on the profile.

2.3.1.2 Existing ground elevations and proposed finished centerline grades, shall be shown on the profile at increments of 50' or less.

2.3.2 The gradients of intersecting roadways shall be as flat as practical, in order to provide approach platforms for stopped vehicles.

2.3.2.1 Approach platforms shall extend back from the intersecting roadway a minimum of 100 feet. The platforms shall not exceed a grade of 3 percent unless approved by the Director of Public Works.

2.4 Cross Sections

2.4.1 Cross sections shall be required for all new construction and for improvements to existing roadways for projects 500 linear feet or greater in length. The necessity for cross sections for projects less than 500 linear feet in length shall be at the discretion of the Department of Public Works.

2.4.1.1 Cross sections shall be required at intervals no greater than 50 feet. Cross sections shall also be required for all intersecting streets and at all proposed driveways. Additional cross sections may be required at the discretion of the Public Works Director.

2.4.1.2 The roadway template shall conform to the City of Manchester, Department of Public Works typical roadway section for all subdivision and site improvement projects. (See Figure 2- 1) Any change in or variation from the typical roadway section relative to improvements of existing roadways shall be submitted for review and approval.

2.4.1.3 Sufficient cross section data shall be obtained and gutter line grades shown in those areas where the normal cross slope of the roadway changes.

2.5 Driveways

2.5.1 Driveways shall conform to the requirements of the Standard Specifications and the City of Manchester Planning and Community Development Department. Where applicable, driveways shall also conform to the State of New Hampshire Department of Transportation "Policy and Procedure for Driveways and Other Accesses."

2.5.1.1 All driveways shall have a minimum positive pitch of 2 percent FROM the gutter to the right of way line. Driveway treatment for cut and fill conditions, shall be as shown in Figure 610- 1

2.5.1.2 All driveways shall be paved to the limits of the right-of-way with a minimum of 3" of pavement.

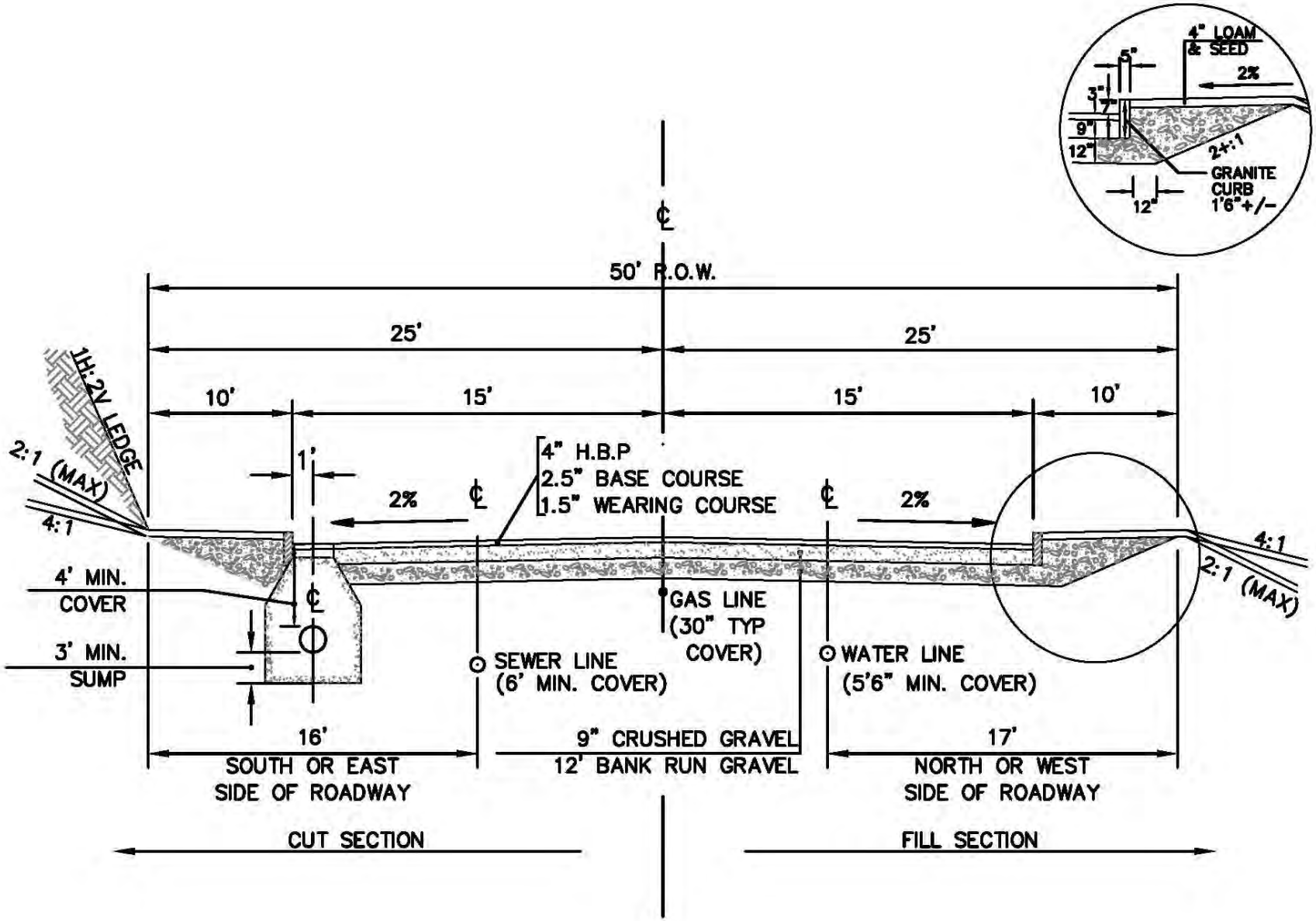

TYPICAL ROADWAY SECTION

S:\DWG\DETAILS\2-1 ROADWAY.DWG

NOT TO SCALE

FIGURE 2-1

STATIONING

SOUTH TO NORTH
WEST TO EAST

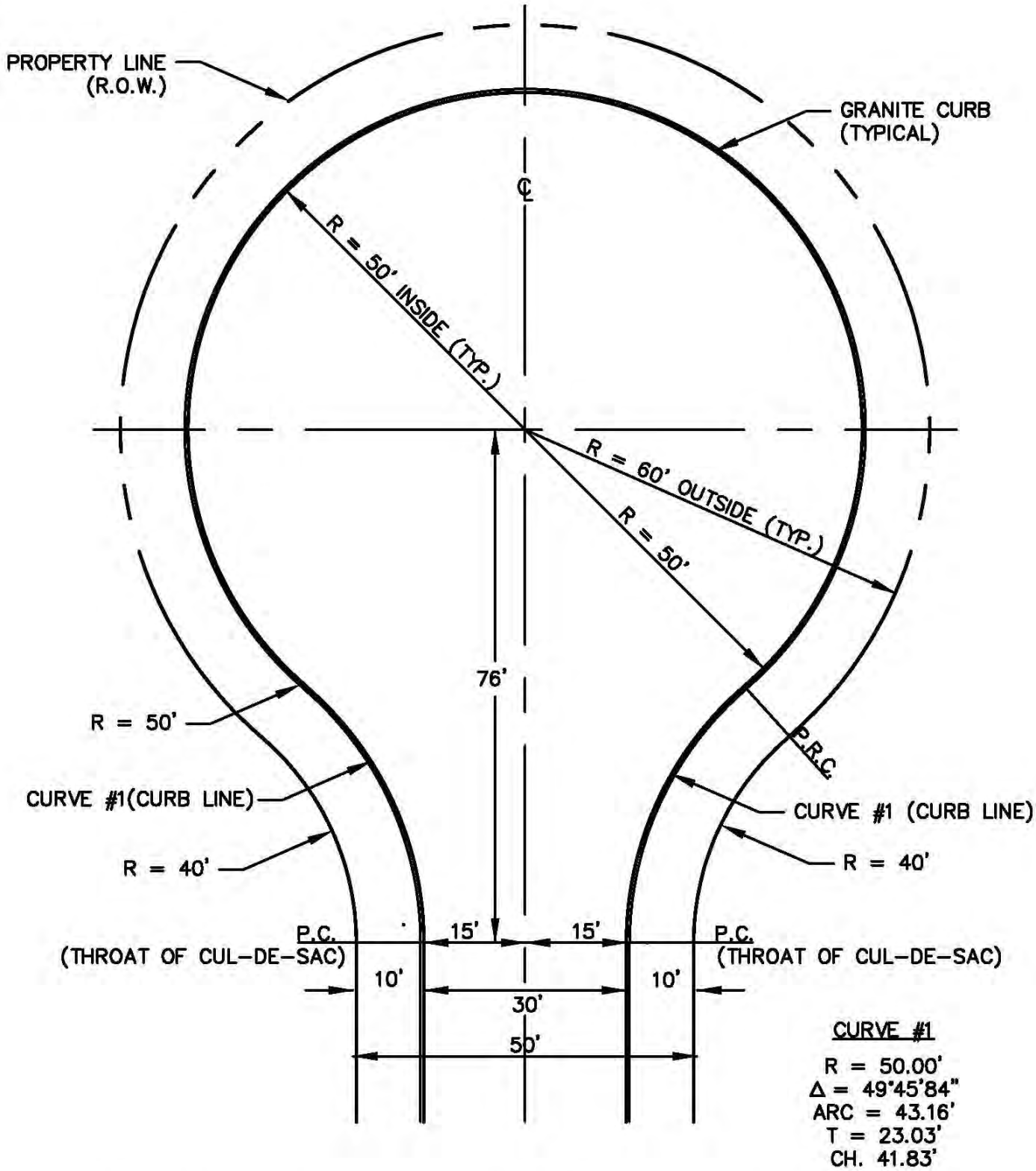

TYPICAL CUL-DE-SAC, 30' WIDE STREET

S:\DWG\DETAILS\2-2 CULDESAC.DWG

NOT TO SCALE

FIGURE, 2-2

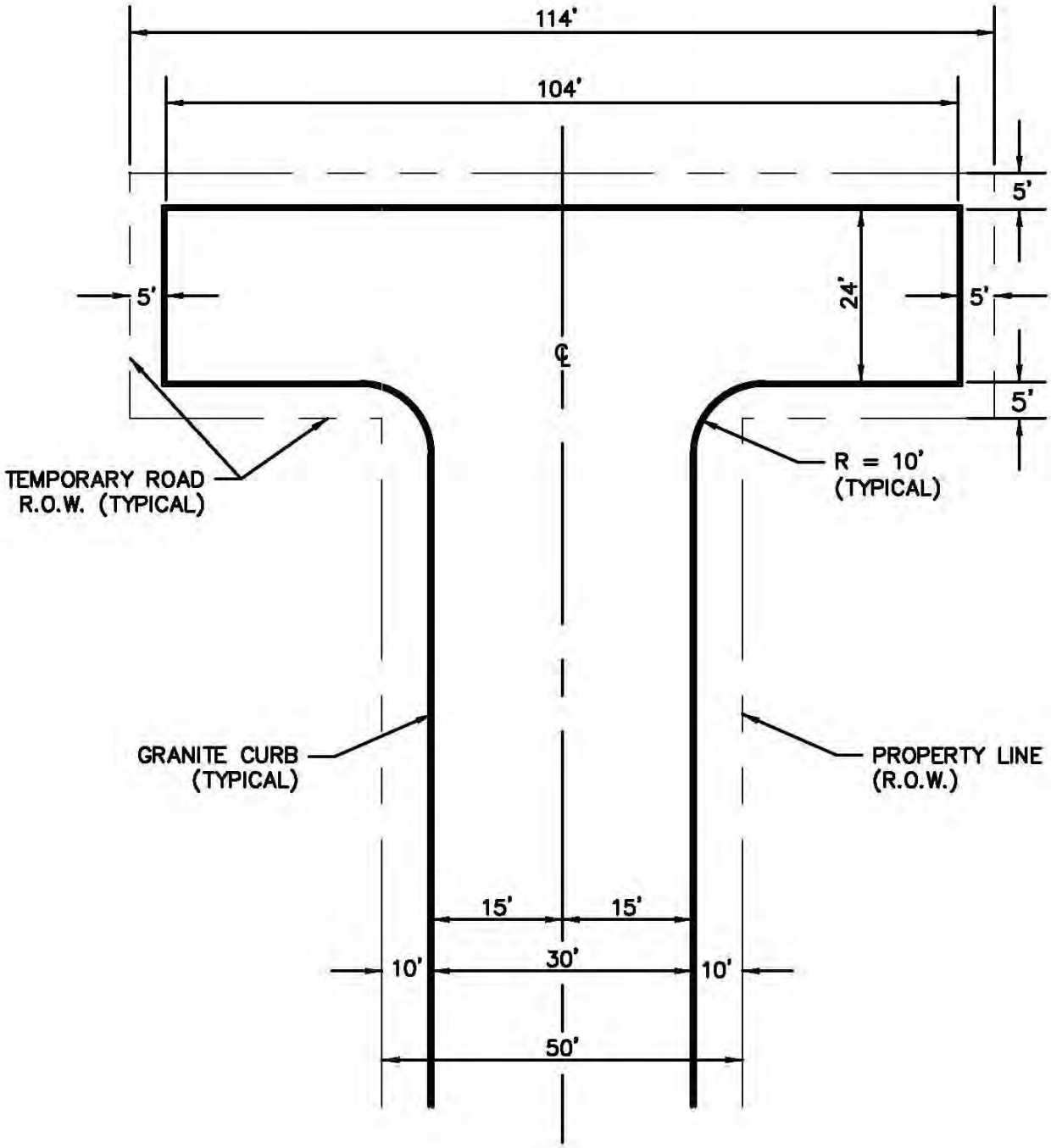

TYPICAL TEMPORARY TURNAROUND

S:\DWG\DETAILS\2-3 HMRHEAD.DWG

NOT TO SCALE
FIGURE 2-3

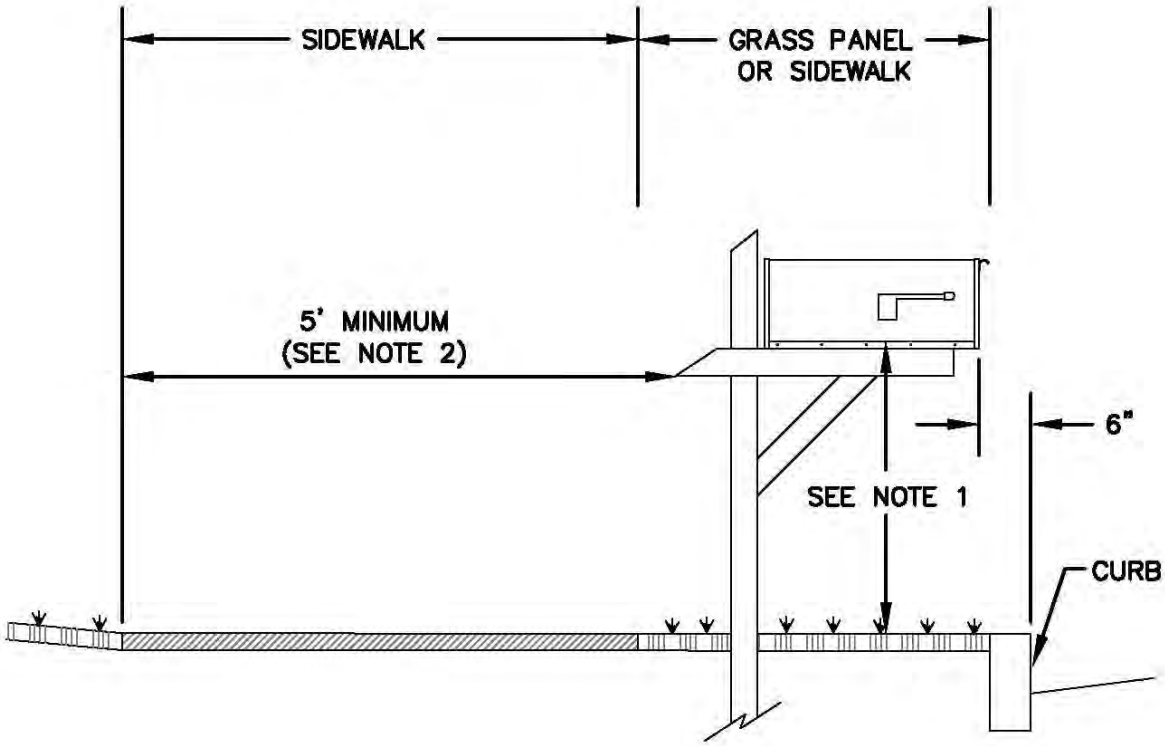

1. UNITED STATES POSTAL SERVICE REGULATIONS REGARDING THE LOCATION AND DIMENSIONS REQUIRED FOR PLACEMENT SHALL BE FOLLOWED.

2. THE DISTANCE FROM THE BACK OF ANY MAILBOX STRUCTURE TO THE BACK OF SIDEWALK SHALL NOT BE LESS THAN 5 FEET. PLACEMENT OF ALL MAILBOXES TO THE SIDE OF THE STREET WITHOUT A SIDEWALK IS ALLOWED IF REQUIRED CLEARANCES CANNOT BE ATTAINED.

MAILBOX LOCATION DETAILS

G:\DWG\DETAILS\2-4 MB PLACEMENT.DWG

NOT TO SCALE
FIGURE 2-4

SECTION 3 - SEWER REQUIREMENTS

3.1 General

3.1.1 Design sanitary flow calculations shall be prepared by a professional civil engineer currently licensed in the State of New Hampshire.

3.1.2 All calculated flows shall be in gallons per day.

3.1.3 All sewer systems and appurtenances shall be constructed in accordance with Section 601 and Section 602 of the Standard Specifications Technical Specifications.

3.2 Horizontal Alignment

3.2.1 Sanitary sewer lines shall be located on the south or east side of the roadway (See Typical Roadway Section, Figure 2- 1).

3.2.2 During design, sewer lines shall be located at least 10 feet horizontally from any existing or proposed water line. A deviation from the separation requirement will be allowed where necessary to avoid conflict with subsurface structures, utility chambers and building foundations, provided that the sewer is constructed as follows:

3.2.2.1 Sewer pipe shall be class 52 ductile iron or Polyvinyl Chloride (PVC) with a minimum Standard Dimension Ratio (SDR) of SDR35for gravity sewer and SDR 26 for pressure sewer. All piping used shall meet NHDES wastewater regulations; and

3.2.2.2 Joints shall be pressure tested in accordance with Section 601.

3.2.3 Sewers crossing streams or located within 10 feet of a stream embankment shall be protected against erosion.

3.2.4 Manholes shall be placed at the end of each sewer line, at all pipe intersections and at all changes in alignment. Desirable spacing of manholes shall be no more than 300 feet.

3.2.4.1 Manhole locations and the horizontal distance or stationing between manholes shall be shown on the plans.

3.2.5 All pipes shall be laid on a direct line between manholes.

3.2.5.1 The size, type of material and class of pipes shall be shown on the plans.

3.3 Vertical Alignment

3.3.1 Sewers shall be of sufficient depth to receive sewage from below basement floors and to preclude freezing.

3.3.1.1 The minimum depth of cover in roadways shall be 6 feet and for cross-country installations, shall be 4 feet.

3.3.1.2 Whenever sewers unavoidably must cross under water mains, the sewer shall be located at such an elevation that the top of the sewer is at least 18 inches below the bottom of the water main.. Sewer pipe joints shall be located at least 6 feet horizontally from the water main. All design and construction shall comply with NHDES wastewater regulations for the protection of potable water supplies.

3.3.2 Based on the Manning formula, all sewers shall be designed such that a minimum velocity of 2 feet per second will be maintained when flowing full. Roughness coefficients shall be .009 for PVC pipe and .013 for all other specified pipe materials.

3.3.2.1 Velocities in excess of 10 feet per second shall be avoided whenever possible. Where velocities greater than 10 feet per second may be attained, special provisions shall be made to protect against displacement by erosion and shock.

3.3.2.2 Sewers shall be uniformly graded between manholes and the size, slope, type of material and class of all pipes shall be shown on the profiles. Minimum slopes are noted on Table 2-1 as follows.

TABLE 3 - 1
MINIMUM SEWER SLOPE REQUIREMENT

Sewer Size	Min. Slope (ft/ft)
8"	0.0040
10"	0.0028
12"	0.0022
14"	0.0017
15"	0.0015
16"	0.0014
18"	0.0012
21"	0.0010
24"	0.0008
27"	0.0007
30"	0.0006
36"	0.0005

3.3.3 Manholes shall be located at all changes in grade or pipe size.

3.3.3.1 A drop entry pipe shall be provided for any sewer entering a manhole at an elevation of 24 inches or more above the manhole invert. Where the difference in elevation will be less than 24 inches, the slope of the incoming pipe sewer shall be adjusted to meet the manhole invert elevation (See Figure 601- 4and Figure 601- 5).

3.3.3.2 A drop of at least 0.1 feet shall be provided between incoming and outgoing pipes in all manholes.

3.3.3.3 The minimum diameter of manholes shall be 48 inches. For pipes larger than 24 inches in diameter, manhole diameters shall be increased accordingly in order to provide at least a 12 inch shelf on both sides of the invert.

3.3.3.4 Where the pipe size is increased, the invert of the larger pipe shall be sufficiently lowered to maintain the same hydraulic gradient.

3.3.3.5 Profiles shall indicate all manholes. All pipe invert and rim elevations shall be shown.

3.3.3.6 The locations and depth of other existing or proposed underground utilities shall be shown on the plans and profiles in order to avoid conflicts during construction.

3.4 Pump Stations

3.4.1 City owned sewage pump stations are not encouraged by the Department of Public Works.

3.4.2 Private Pump Stations shall conform to the requirements of the State of New Hampshire Water Supply and Pollution Control Division, the City of Manchester Code of Ordinances, Chapter 52 – Sewers, the City of Manchester Standard Specifications, and the following guidelines. Detailed shop drawings, catalog cuts and design calculations shall be submitted and approved by the City. All private pump stations shall be inspected by the Highway Department prior to being placed into operation. A complete set of operation and maintenance manuals will be included with every pump station.

3.4.2.1 Industrial or Commercial Sites:

3.4.2.1.1 Any type of sewage pump station conforming to the requirements of section 3.4.2, shall be permitted for use in order to provide service for one building.

3.4.2.1.2 A site with the potential of being subdivided:

3.4.2.1.2.1 The site and service area must be defined and approved.

3.4.2.1.2.2 Design sanitary flows must be approved.

3.4.2.1.2.3 Submersible pumps will not be permitted unless approved in advance by the Public Works Director.

3.4.2.1.2.4 A private service agreement must be set up by the Developer of the project and shall define operation, maintenance, cost and cost sharing responsibilities. This agreement must be reviewed and approved by the City.

3.4.2.1.2.5 No site outside the original service area may be added without approval of the Public Works Director.

3.4.2.2 Residential Apartments and Condominiums:

3.4.2.2.1 The sewage pump station will be designed to provide service for only the apartment or condominium site.

3.4.2.2.2 Design sanitary flows must be approved.

3.4.2.2.3 Submersible pumps will not be permitted unless approved in advance by the Public Works Director.

3.4.2.2.4 Standby power and an alarm system must be provided.

3.4.2.2.5 In the case of condominium developments, the Developer may be required to set up and/or participate in a mechanism to fund the cost of operation, maintenance and equipment replacement to assist the Homeowners Association.

3.4.2.3 Single Family Residential Developments:

3.4.2.3.1 Private sewage pump stations proposed in single family residential developments having public roadways and other public utilities will be discouraged.

3.4.2.3.2 Submersible pumps will not be permitted unless approved in advance by the Public Works Director.

3.4.2.3.3 The sewage pump station shall be of wet well/dry well construction, having approved ventilation and provisions for emergency power as a minimum.

3.4.2.3.4 The Developer will be required to set up and participate in a mechanism to fund the cost of operation, maintenance and equipment replacement for the pump station to assist the Homeowners Association. A copy of the pump station maintenance contract for the Homeowners Association will be placed on file at the Highway Department prior to the pump station being placed into service.

3.4.2.3.5 Suction lift pump stations with emergency power may be permitted, depending on the size of the project.

3.4.2.4 Pumped Building Connection:

3.4.2.4.1 Pumped building connections to the public sewers will only be permitted if they conform to this regulation, the City's Sewer Use Ordinance or approved in advance by the Public Works Director.

3.4.2.4.2 A building connection from an individual sewage lift system for an existing structure will be permitted, if the connection to the public sewer is within 200 feet of the property line.

3.4.2.4.3 A sewage lift building connection for new construction will only be considered if the requesting party can demonstrate that all gravity sewer options have been exhausted and the connection is within 100 feet of their property line.

3.4.2.4.3.1 Multi-lot sewage lift building connections are discouraged. Use may be approved at the sole discretion of the Public Works Director.

3.4.2.4.4 Individual sewage lift systems that are approved must have separate effluent lines (force mains).

3.5 Force mains

3.5.1 Force mains shall be sized to yield a cleansing velocity of 3 feet per second or greater at design flow

3.5.2 Force mains shall be provided with automatic air relief valve(s) at high points to prevent air locking.

3.5.3 Force mains shall enter the gravity sewer system at a point not more than 2 feet above the flow line on the receiving manhole.

3.5.4 Force mains shall be provided with drainage blow-offs, properly valved, at low points. Space shall be available at such locations for handling the displaced waste without danger of pollution or health hazard.

3.5.5 Force mains shall be constructed of ductile iron, polyethylene or PVC material.

3.5.6 Thrust blocks shall be placed at all bends, elbows, tees, and junctions.

3.5.7 Force mains shall be treated as gravity sewers for purposes of foundations bedding and backfill requirements.

SECTION 4 - STORM DRAINAGE REQUIREMENTS

4.1 Calculations. Design storm runoff calculations shall be prepared by a professional civil engineer currently licensed in the State of New Hampshire and shall be submitted to the Department for review. The calculations shall include:

4.1.2 A topographic plan with contours sufficient to show storm runoff areas tributary to and including the site shall be prepared and submitted to the Department of Public Works for review.

4.1.3 A storm drain design shall be based on a 25-year storm.

4.1.4 Plans that include areas tributary to the site as well as for the site itself.

4.1.5 Design calculations for the proposed systems to control runoff from the site.

4.1.6 The design of the drainage system shall include an analysis of any adverse effects on upstream and downstream public and private lands or facilities including, but not necessarily limited to the following:

4.1.1.1 Contamination of public and private water supplies, ponds or pools and wells;

4.1.1.2 Increased flows in existing drainage channels;

4.1.1.3 New drainage outlets on public or private property;

4.1.1.4 Disruption of existing public or private surface or subsurface drainage systems;

4.1.1.5 Temporary or permanent flooding of public or private property, and

4.1.1.6 Erosion of or deposition on public or private property.

4.1.7 Drainage systems for proposed site developments and subdivisions involving the construction of new roadways shall meet the requirements of Section 6.5 of the Subdivision and Site Plan Regulations of the City of Manchester, dated January 13, 2000 and as amended.

4.1.8 Temporary and permanent erosion and sediment control measures shall be implemented in accordance with the Stormwater Management and Erosion and Sediment Control Handbook for Urban and Developing Areas in New Hampshire, dated August, 1992 prepared for the New Hampshire Department of Environmental Services and The NH Stormwater Manual, dated December 2008 and as amended, prepared by New Hampshire Department of Environmental Services.

4.2 Drainage Pipe

4.2.1 All drainage pipe shall be reinforced concrete pipe (RCP) or high density polyethylene (HDP) pipe.

4.2.2 Under roadways, when the cover over the pipe is less than 15 feet, HDP or Class IV RCP pipe may be used. Class III reinforced concrete pipe or HDP pipe shall be allowed for all other locations. When the cover over the pipe is 15 feet or greater, reinforced concrete pipe shall be used.

4.2.2.1 Minimum cover for all drain pipes shall be 4 feet. Where the minimum cover requirement cannot be met, the strength of the pipe should be checked. In no case will HDP pipe be allowed with less than 4 feet of cover.

4.2.2.2 Minimum size for drain pipes shall be 12 inches.

4.2.2.3 The maximum size for HDP pipe shall be 24 inches

4.2.2.4 All storm drain lines shall be designed such that a minimum velocity of 2.5 feet per second will be maintained when flowing 1/3 full. A Manning roughness coefficient of 0.015 shall be used for reinforced concrete pipe and 0.009 shall be used for HDP pipe. For open ditches, a minimum desirable grade of 0.5 percent shall be employed where possible in order to keep the ditch self-cleaning.

4.2.2.5 Approved headwalls shall be constructed at all pipe outlets and flows directed through stabilized channels. The velocity at all pipe outlets shall be determined and proper precautions taken against predictable downstream erosion and deposition. Protection grates shall be installed on all headwall openings or outlets of 12" diameter or greater. (See Section 603 -- Storm Drains)

4.2.2.6 Pipe culverts shall be designed as open flow channels. They shall either be under inlet or outlet control. It is preferred that culverts be located to fit natural channels in line and grade.

4.2.2.7 Where velocities in excess of 10 feet per second may be attained, special provision shall be made to protect against erosion and displacement by shock.

4.3 Drainage Structures

4.3.1 Drainage Structures shall be placed at all pipe intersections and at all changes in alignment, grade and pipe size but, in any case, a storm drain shall not have a manhole or catch basin more than 300 feet apart. The maximum desirable length for open ditches out-letting at culverts or catch basins shall be 400 feet.

4.3.2 Catch basins shall have Type "B" grates and shall have sumps a minimum of 36 inches deep. Granite curb inlets (where vertical granite curb is being used) may be required where additional inlet capacity is needed.

4.3.3 At least one catch basin will be located at the bottom of a sag. On a crowned roadway two will be required (one on each side of the roadway). Depending on roadway design grades within the sag, an additional catch basin on either side of the low point basin(s) could be necessary. The spacing between all the catch basins will be such as to prevent ponding in the roadway.

4.3.4 Surface runoff shall be intercepted upgrade from all roadway intersections. Catch basins shall be located on the tangents preceding the curb returns. Location of these basins and the nearby grading of the roadway gutter line shall be taken into account to prevent possible ponding of runoff at the base of proposed or future sidewalk access ramps.

4.3.5 Drainage structure outlet pipes should be at least 3 inches lower than the lowest inlet pipe. Increases in pipe size through a drainage structure shall be accomplished by keeping the crowns of the pipes at an equal elevation.

4.3.6 All pipes shall be laid on a direct line and shall be uniformly graded between drainage structures.

4.4 Detention Basins

4.4.1 City owned detention and retention basins for public improvements are not encouraged. They may be allowed only after it has been demonstrated that no other alternative exists and as approved by the Department of Highways.

4.4.2 Detention basins shall have a buffer of dense vegetation or fencing to limit access. Vehicular access for maintenance shall be maintained.

4.4.3 Outlet structures from detention basins shall have a minimum pipe size of 12” diameter.

SECTION 5 - STREET EXCAVATION REQUIREMENTS

5.1 Excavation Permit - General Instructions

5.1.1 Street Excavation permits shall be issued by the Department of Public Works of the City of Manchester.

5.1.2 Anyone wishing to open or excavate on City property or within the City's right of way must obtain a permit from the Department of Public Works.

5.1.3 All fees listed are subject to change without notice.

5.1.4 An Application and Permit form, prepared in accordance with Department procedures, is required for every excavation and must be accompanied by the required permit fee.

5.1.5 A set of plans showing the work to be performed must accompany each request for a permit.

5.1.6 The original copy of the approved Application and Permit form and an approved set of work and plans (marked "approved") must be kept on the job at all times.

5.1.7 If work for which any Department of Public Works permit has been issued does not commence within five (5) days from the date of the permit or the proposed construction start date if given, the Permit becomes "void". The permit may be extended by the Department of Public Works if a request for an extension is made prior to the permit becoming void. Once a permit has become void, it will be considered as if the permit was never issued, but the fee will not be refunded.

5.1.8 Each applicant shall be familiar with these regulations governing street excavations within Standard Specifications. The Standard Specifications are available on the Department of Public Works website.

5.1.9 The Public Works Director is authorized to revoke any permit if he finds that the City of Manchester Street Excavation Ordinance or the Regulations and Specifications are being violated.

5.1.10 Construction plans for major and minor underground installations submitted to the Department of Public Works for permits shall contain the following:

5.1.10.1 Major Underground Installations - These projects are defined as follows:

- Those involving more than one conduit.
- Those electric conduits four (4) inches and larger.
- Electrical cable system of 34 KV or higher.
- Gas main two (2) inches in diameter or larger.
- Water mains six (6) inches in diameter or larger.

- Sewer mains eight (8) inches in diameter or larger.

a) **Plans and Profile Requirements:** Drawing should be 22" x 34" with horizontal scale of one (1) inch = 20 feet and vertical scale of one (1) inch = four (4) feet or two (2) feet, (whichever is best) and provide the following:

- Locations of proposed construction.
- All existing facilities, right-of-ways and property lines.
- All construction details.
- Elevations for the entire length of the profile including:

  1. Existing roadway;
  2. Proposed installations;
  3. Existing facilities.

5.1.10.2 Minor Underground Installations. All proposed underground installations not described above as major installations.

a) **Plan Requirements:** Complete set of drawing shall be provided showing:

- Locations of proposed construction.
- All existing facilities that the proposed construction would cross or parallel in public right-of-way.
- Dimensional ties to monument lines in streets and to property lines.
- A scale of one (1) inch = 20 feet is desired.
- Depth of proposed installations by notes on the permit drawings.

5.1.10.3 "As-Built" Drawings: "As-Built" drawing shall be provided on all major and minor underground installations per Part I, Section 1-General Requirements, paragraph 1.13.

a) Horizontal and vertical datum of plans shall be as described in Part I, Section 1-General Requirements, paragraph 1.14.

5.2 Permit Fees and Requirements.

5.2.1 All applications for a permit to excavate in, or open a public right-of-way or public property, shall include a fee for each permit applied for. The fee for an excavation permit, payable in advance, is as follows:

5.2.2 An administrative and inspection charge of $200.00 per permit for all excavations within the public right-of-way or on City property.

5.2.3 Street excavation permit fees may be annually adjusted by Board of Mayor and Aldermen resolution on July 1st (start of fiscal year).

5.2.4 The fees for the administrative and inspection charge of the permit may be increased if the work results in additional administrative and inspection time required to complete the work. The base administrative and inspection charge includes 2 hours of on-site inspection. Additional charges will be billed and due upon presentation.

5.2.5 A Late Permit fee of two hundred dollars ($200.00) will be charged if any excavation is begun without a Street Excavation Permit (other than those approved as an Emergency Excavation) which is in effect at the time to the excavation.

5.2.6 Work authorized by a permit shall be performed between 7:00 a.m. and 9:00 p.m., Monday through Friday from April 1st through November 15th, unless the permittee obtains written consent from the Public Works Director to do the work during another time. In case of an emergency, the "Emergency Provisions" section of the regulation shall apply.

5.2.7 The permittee shall notify the Department of Public Works inspection division 2 working days before construction has begun.

5.2.8 If the construction is delayed or ceases for more than a day, the Contractor must notify the Department of Public Works inspection division in advance, when the work will resume. Failure to do so may cause work to be redone so inspections can be performed.

5.2.9 The location of all utility facilities shall be determined sufficiently ahead of excavation work to avoid damage to those facilities and permit their relocation if necessary. The permittee shall, as specified by New Hampshire Law, RSA 374:51 and 374:55, call DIG SAFE at (1-888-344-7233) at least 72 hours prior to any excavation. The permittee shall also notify the Manchester Police and Manchester Fire Department, Manchester Transit Authority and Ambulance Services.

5.2.10 The permit shall be kept with the foreman at the place where the work is being performed and shall be produced for examination upon request of any member or officer of the Department of Public Works or any police officer of the City of Manchester.

5.2.11 The permittee agrees to meet all insurance requirements, terms and conditions of Section 106.13 of the current Standard Specifications.

5.2.12 The Public Works Director, as a condition of the permit, reserves the right to restore the highway or cause the same to be restored under his directions and the permittee shall reimburse the City for any or all liability and expense suffered by reason of such work. If the final restoration is not completed in a prompt manner, department forces will, after notice has been given to the permittee, make final restoration which may be done after their normal working hours (overtime rate). The permittee shall reimburse the City for any liability and expense suffered by reason of such work.

5.2.13 Insurance Requirements

5.2.13.1 Liability insurance of $1,000,000.00 general liability, $1,000,000.00 automotive and $500,000.00 workman's compensation is required.

5.2.13.2 The City of Manchester, Department of Public Works must be listed as additionally insured.

5.2.13.3 The certificate holder must be listed as:

The City of Manchester – DPW
475 Valley Street
Manchester, NH 03103

5.2.14 Bond Requirements

5.2.14.1 A $5000.00 surety bond shall be furnished and shall run for 30 months to cover any possibility of faulty work not repaired by the Contractor.

5.2.13.1.1 The Director of Public Works may require an increase in the surety amount depending upon the volume of work being performed by the permittee.

5.2.14.2 A $10,000.00 payment bond is required to assure the prompt payment of street degradation fees billed to the Contractor after the work is completed. This bond must be renewed annually.

5.2.15 Degradation Charges

5.2.15.1 A street degradation charge of $5.00 per square foot of excavation occurring within the paved portions of the public right-of-way or on City property.

5.2.15.2 An infrastructure degradation charge of $1.50 per square foot of excavation occurring within the greenbelt or unpaved sidewalk areas of the public right-of-way or on unpaved portions of City Property.

5.2.15.3 All street degradation and infrastructure degradation charges shall be based upon final measurements of patches or disturbances subject to verification of actual excavation impacts by the City's inspection representatives.

5.2.15.4 If a contractor disputes a final measurement provided by the City he may request to meet with the inspector on site to re-measure the patch. If the City and the Contractor still cannot agree on the patch size, the Contractor may elect to hire at his own cost, a Licensed Land Surveyor to provide the patch size measurement. The City may elect to agree with the survey provided or conduct it's own.

5.2.15.5 If work is done on a street that is currently under moratorium as described in the Street Restoration and Patching Guidelines, the Permittee will be responsible for paying an additional street degradation and/or infrastructure degradation charges, to be billed and due upon presentation. This factor shall be assessed as follows:

- Street pavement overlay less than 3 years old – two times the street damage charge.
- Street pavement of a reconstructed street less than 5 years old – two times the street damage charge.

5.2.15.6 The Public Works Director reserves the right to allow alternative means of repair or restoration or other roadway improvements in lieu of the required degradation charge.

5.3 Winter Excavation Permits

5.3.1 Application Procedure

5.3.1.1 Between November 15th and April 1st - Permits will be issued on a case by case basis for any Street Excavation with the exception of emergencies. Emergency requests must conform to the following:

1. The permit must be signed by the Public Works Director and there must be a plan with each permit request. New work must also be signed by the Public Works Director.

2. The request must be in a letter form, stating:

   a) Date of request.
   b) Name of Contractor.
   c) Name of customer/homeowner, business, and/or other interested parties.
   d) Detailed description of project.
   e) Reason why it has to be done now.
   f) Method of temporary restoration.
   g) Who will maintain patch until permanently restored with a 24 hour contact number.
   h) When will excavation be permanently restored.
   i) Company that will effect restoration.

5.3.1.2 Winter Construction Procedures. The procedure outlined in the Department's Street Excavation General Instructions, shall be followed **except** for the placing of asphaltic pavement.

5.3.1.3 If hot bituminous concrete asphalt is available, three (3) inches of **temporary** hot bituminous pavement (12.5mm aggregate mix) shall be used. If hot bituminous concrete asphalt is not available, then, QPR 2,000 high performance cold patch shall be placed over a prepared crushed gravel base, OR;

5.3.1.4 Three (3) inches of Class A (3000 PSI) concrete shall be placed over a prepared crushed gravel base.

a) The concrete shall have a one percent (1%) calcium chloride added to accelerate curing.
b) The concrete placed shall be brought up even with the elevation of the existing asphalt pavement.
c) The surface of the pavement will have a rough broom-type finish placed perpendicular to the flow of traffic.
d) The concrete pavement shall be protected from freezing for a minimum of two (2) days by covering it with polyethylene plastic or hay and polyethylene plastic. The length of protection and curing, may be increased or decreased by the Department of Public Works depending on the daily temperature.

5.3.1.5 The following spring when hot bituminous pavement becomes available, the temporary patch shall be removed and replaced with pavement as required in the Department of Public Works Street Excavation General Instructions.

5.3.1.6 The permittee must maintain the temporary patch until permanent restorations can be performed.

5.4 Emergency Excavations.

5.4.1 In the event of an emergency, excavations or closing of City streets due to a utility leak or like situation, the Police Department, Fire Department and Department of Public Works Dispatcher shall be notified immediately by telephone. **At the earliest opportunity available**, a representative of the Permitee shall obtain a regular permit at the office of the Department of Public Works.

5.4.2 The Public Works Director reserves the right to waive any of the provisions of this regulation in case of an emergency, and to impose such conditions as he may require as part of an emergency permit.

5.4.3 After an excavation is commenced, the work shall proceed in a continuous manner with diligence and expedition and shall be completed and the street restored, as nearly as possible to its original condition so as not to obstruct the public places or travel thereon more than is reasonable necessary. The surface of the street shall be permanently restored within a period of time not to exceed five (5) days from the date of completion of the project for main streets, and ten (10) days form the date of completion of the project for side streets. In any event, the permittee shall place and maintain temporary pavement immediately upon backfilling and shall be maintain the pavement on a daily basis (See Figure 5- 5). Department of Public Works inspectors will require temporary “Hot-Patch” or “Cold-Patch” dependent upon the location of the opening.

5.4.4 Upon completion of the pavement restoration, the Department of Public Works shall be immediately notified as to the location and time of completion

5.5 Inspection Agreement.

5.5.1 The Contractor may be required to obtain an inspection agreement per the requirements of the General Provisions for Construction of Public Improvements, Section 6.2.9, of the Standard Specifications for Road, Drain and Sewer Construction.

5.5.2 **Surety Requirements.** As part of the Inspection Agreement the Contractor shall furnish $5000.00 to insure payment of inspection fees. Acceptable methods of the surety shall be one of the following:

a) payment bond
b) letter of credit
c) bank check (certified funds)

5.6 Encumbrances and Traffic Control

5.6.1 No more than 200 feet longitudinally shall be opened in any street at one time, except by special permission of the Department of Public Works. No opening or excavation in any street shall extend beyond the centerline of the street before being backfilled and the surface of the street made passable to traffic.

5.6.2 A Street Excavation permit gives the right to encumber a roadway with proper traffic control, as long as a minimum of one lane of traffic (11 feet wide) is provided on the street at all times. Access shall be provided to all properties at night and on weekends and to all places of business at all times.

5.6.3 Any street excavation restricting complete traffic movement must have an encumbrance permit in addition to the Street Excavation permit. This Encumbrance Permit will only be issued with an approved traffic control plan. If a complete street closure is necessary, at least seven (7) working days advance notice is required with confirmation of the proposed closure three (3) working days in advance of the actual street closure. The Public Works Director will review and approve any detours required.

5.6.4 If an emergency necessitates the complete closing of a street, the closing will be governed by the **"**Emergency Provisions**"** section of this regulation.

5.6.5 Every permittee will be required to place around openings, excavations, encumbrances or obstructions, such barriers, barricades, lights, warning flags, danger signs and traffic control personnel as may be required by the Department of Public Works or the Manchester Police Department to protect the safety of the general public. Adequate artificial lighting devices are required to call attention to and indicate the actual location of obstructions and hazards.

5.6.6 All barricades, warning signs, lights, temporary signals and other protective devices shall conform with the current edition of the "Manual on Uniform Traffic Control Devices for

Street and Highways" which is approved by the Federal Highway Administrator as the national standard for all highways open to public travel.

5.6.7 Traffic control devices shall be set up prior to the start of construction or maintenance operations and shall remain in place only as long as needed, or required by the Department of Public Works. Advertisements, notices and signs other than for traffic control shall not be displayed on or attached to any barricade or fence in any highway.

5.6.8 When the work area encroaches upon a sidewalk, walkway or crosswalk area, protective barriers, together with appropriate warning and guidance devices and signs must be utilized so that the passageway for pedestrians is safe and well defined.

5.7 Protection of Work Area

5.7.1 Street line monuments, survey reference points and permanent survey bench marks, shall not be removed or disturbed, unless specifically permitted in writing by the Department of Public Works.

5.7.2 Provisions shall be made to provide for proper drainage during construction and the permittee shall be responsible for all claims for damage or injury that may arise from the obstruction or use of any public sewer or drain in connection with the work conducted under the permit.

5.7.3 Shade trees shall not be cut down, trimmed or otherwise injured. Where it is necessary to cut and remove pavement, curb, sidewalk and/or other surface improvement, the material shall be cut and removed by means of equipment suitable to the type of material to be removed and in a manner which results in a minimum amount of damage to adjacent improvements.

5.7.4 As the work progresses, all streets shall be thoroughly cleaned of all rubbish, excess earth, rock and other debris resulting from such work.

5.7.5 Dust control shall be provided as necessary to prevent a nuisance to abutters and surrounding areas. Dust control shall be by wetting or use of calcium chloride or other approved methods.

5.8 Proof of Compliance

5.8.1 In general, where compliance to the requirements of these regulations and their intent is in question, the permittee, at his expense, shall provide any and all proof of compliance to the Department of Public Works. Acceptable proof shall be by, but not limited to, approved independent laboratory tests, approved independent field tests, shop drawings and certificates of compliance from manufacturers. Specific tests as required by regulations and specifications shall be performed as ordered.

5.9 Responsibility of Street Restoration and Patching

5.9.1 The person, partnership, firm, corporation, etc. who obtains the permit to excavate, shall be responsible for said excavation for thirty (30) months after all work conducted under the permit has been completed, and may be ordered by the Department of Public Works at any time during the thirty (30) month period to improve or replace the work.

5.10 Number of Permits Issued.

5.10.1 The Department of Public Works will deny permits to those Contractors or utilities with an excessive numbers of unfinished patches. The number of permits issued shall be limited as follows:

5.10.2 Spring Start-Up. When paving plants open, permits will be issued a the following rates:

Table 5-1- Outstanding Patches, Spring Start-up

No. of Outstanding Patches	No. of Permits Issued/Week
Greater than 25	0 (Including Emergencies)
25 or Less	10 (Including Emergencies)
10 or Less	Unlimited

5.10.3 End of Year. The following paving milestones must be met or additional permits will be denied.

Table 5-2- Outstanding Patches, End of Year

Date	No. of Outstanding Patches
1st Monday in October	50
3rd Monday in October	40
1st Monday in November	20
November 15th	0
After November 15th	Issued on a “day to day” basis

5.10.4 The Department of Public Works will determine whether or not these milestones are met. Decisions on issuing permits **after** Nov. 15th will be on a “day-to-day basis” as weather permits.

5.11 Moratorium.

5.11.1 After a City street had been overlaid, no excavation permits will be issued for a period of three years unless approval is given by the Director of Public Works or his designee.

5.11.2 After a City street has been newly constructed or reconstructed, no excavation permits will be issued for a period of five years unless approval is given by the Director of Public Works or his designee.

5.11.3 Protection of Streets – In an effort to protect the City's investment in its infrastructure, excavations in areas under moratorium within the public right-of-way or on City property, are prohibited except as follows:

a. Excavations to remedy a public emergency or a situation that creates an imminent threat to the public safety, health or welfare.
b. Repair or modification to prevent interruption of essential utility services where no reasonable alternatives are available to avoid excavation in new pavements.
c. Relocation work that is mandated by State or Federal legislation.
d. Utility services for new buildings or parcels without existing utility services where no other reasonable means of providing service exists, as determined by the City Engineer.
e. Excavations within protected streets where the City has scheduled the reconstruction within one year due to the failure of the original pavement.
f. Other situations deemed by the Public Works Director to be in the best interest of the general public.

5.11.4 The Department of Public Works will notify utilities of the schedule for overlay and reconstruction activities. This notification will allow time for utilities to perform work as needed prior to the Department's work. If the Department does not notify the utility of their intent to overlay/reconstruct prior to 60 days of work, then excavations may be granted at the discretion of the Public Works Director or his designee.

5.11.5 When excavations are made in streets closed by moratorium due to emergency or the decision of the Department of Public Works, street restoration will be made utilizing methods dictated by the Department. The methods may include but are not limited to special patching procedures, coldplaning and overlay and/or full width overlay.

5.12 Street Patching and Restoration Requirements

5.12.1 General Requirements

5.12.1.1 Restoration of roadway shoulders shall follow Figure 5-1.

5.12.1.2 Restoration of sidewalks shall follow to Figure 5-1 and conform to the requirements outlined in Section 608 of the Standard Specifications.

5.12.1.3 Roadway pavement shall follow the patching procedures in Figure 5- 4. Roadways under Moratorium as described in 5.11 of this section shall follow patching procedures in Figure 5- 2, unless otherwise directed by the Department.

5.12.1.4 5.12.1.3.1 An alternate restoration method of mill & inlay will be considered upon request by the contractor. Provided that the base course is paved to existing grade and has been through a full winter cycle from November 15th to April 1st. Mill & Inlay shall adhere to the requirements of Section 404 of the Standard Specifications. Areas where cobblestones or concrete slabs are present under the existing roadway surface shall require special restorationas shown in Figure 5- 3. See 5.12.4.3 below.

5.12.1.5 All materials and methods used in the patching and restoration of street excavations shall comply with the Standard Specifications.

5.12.1.6 The work shall proceed in a continuous manner with diligence and expedition. Work shall not obstruct public places of travel more than is reasonably necessary. Upon completion of final pavement restoration, any pavement markings or traffic signal detector loops disturbed during excavation or construction activities associated with the Excavation Permit shall be replaced at no cost to the City.

5.12.1.7 In cases where multiple excavations are made in a street which would result in the edge of patches being closer than 20 feet, the Department of Public Works inspectors may require both to be incorporated into one single patch. .

5.12.1.8 To assure adequate compaction of trench materials, no excavation less than 20 inches in width shall be allowed.

5.12.1.9 If patch overlaps an existing patch and encompasses 50% or more of the existing patch, the entire existing patch area shall be incorporated in to the work.

5.12.1.10 New patch edges less than 4 feet from an existing patch edge shall be extended to meet the existing patch edge and eliminate the 4 foot gap. This shall also apply for patch edges within 4 feet of a longitudinal paving joint, and a curb or edge of pavement line.

5.12.1.11 Only saw cutting and approved milling equipment will be allowed. Only cuts parallel (longitudinal) and perpendicular (transverse) to direction of vehicular travel will be allowed. Jagged, broken or rolled undermined edges are prohibited.

5.12.1.12 Pavement saw cuts parallel (longitudinal) with the direction of vehicular travel shall be adjusted so they do not fall within the wheel path of that lane.

5.12.1.13 Pavement overcuts at corners from sawcutting operations are not allowed. Asphalt remaining in corners shall be chiseled out.

5.12.2 Aggregate Base Layers

5.12.2.1 The gravel sub-base material shall be 12 inches thick and compacted in two six inch layers, to achieve 95% density. Following the gravel base, nine inches of

crushed gravel base shall be placed and compacted to achieve 95% density using pneumatic tampers, vibratory compactors or other approved means. The 12 inch gravel layer may be substituted with a nine (9) inch crushed gravel layer. This will provide a total of 18 inches of crushed gravel road base. However, if existing road base is constructed to current city standard (9 inches of crushed gravel and 12 inches of gravel), it shall be replaced with the same. Both crushed gravel and gravel shall conform to Department of Public Works Standard Specifications. Puddling on the aggregate base materials will not be allowed.

5.12.2.2 In sidewalk and driveway areas, six inches of crushed gravel base shall be placed and compacted to achieve 95% density

5.12.2.3 The material compacted shall be determined by the standard proctor method in accordance with standard specifications.

5.12.2.4 If unsuitable for backfill, excavated material shall be replaced with granular backfill gravel as specified in section 209 of Standard Specifications.

5.12.2.5 The minimum depth to any substructure, except manholes, vault entrance tubes, valve casings and catch basins, shall be 24 inches (30 inches desirable) below the surface of the nearest edge of the traveled portion of the street.

5.12.2.6 When in areas where compaction is not attainable due to the width of the trench or crossing under another utility the DPW may require the use of flowable fill.

5.12.3 Temporary Asphalt Patch

5.12.3.1 In the event the permittee cannot place permeant pavement patch , the permittee shall place and maintain temporary pavement immediately upon backfilling which shall be maintained on a daily basis (See Figure 5- 5). Department of Public Works inspectors will require temporary “Hot-Patch” or “Cold-Patch” dependent upon the location of the opening. All temporary pavement patches shall be painted with 10” (minimum) lettering template that legibly states the name of the Contractor doing the work

5.12.3.2 The permittee shall place and maintain temporary pavement immediately upon backfilling and shall maintain the pavement on a daily basis.

5.12.4 Permanent Asphalt Patch

5.12.4.1 Unless otherwise directed by the Department, permanent base pavement shall be installed within five (5) days from the date of completion of the work. The final wearing course of the street shall be permanently restored within a period of time not to exceed five (5) days from the date of completion of the project for main streets, and ten (10) days form the date of completion of the project for side streets. On large projects, all trench excavations must be based flush by the end of the work

week. It will be the responsibility of the Contractor to take into consideration weather forecasts in planning the work. In the event that these timetables are not met, after notification to the utility, the Department will withhold all permits beginning 24 hours after issuing the "late notice".

5.12.4.2 Completed asphalt surface courses shall be smooth and uniform in texture and free from defects. The crown and grade of patch shall be uniform. Completed surface course shall not vary more than ¼ inch from the lower edge of a 10 foot straight edge placed parallel to the centerline. The Engineer will consider adjacent existing pavement conditions for this requirement.

5.12.4.3 Within areas of cement concrete or stone base (cobbles) overlaid with asphalt, the Department of Public Works will require the replacement of the cement concrete or stone base with Class A Portland Cement Concrete, reinforced or non-reinforced, as specified in Section 520 of the Standard Specifications to a depth equal to that removed (see Figure 5- 3). The concrete can then be overlaid with hot bituminous pavement as required.

5.12.4.4 Any asphalt or concrete sidewalk surface shall be restored to depth equal to existing with three inches minimum. In case of longitudinal trenches in a sidewalk area, full width restoration may be required (See Figure 5- 1).

5.12.4.5 In other areas, the excavation shall be restored to the condition that existed before the excavation or as directed by the Department of Public Works inspectors. Any existing grassland shall be restored with four (4) inches of sifted loam which shall be fertilized and seeded.

5.12.5 Special Patch Conditions

5.12.5.1 Dual Excavations in the Same Street.

- When main replacements or extensions are made by one or more utilities, the Highway Department may require an overlay of the street. Utilities must submit plans of proposed main extensions to the Department for review, after which a decision will be made. Determination will be made by the Department and will be based upon the number of excavations in the street and/or the percent of the street disturbed.

- If the utilities can coordinate their work and be in the same street within 3 calendar days, no temporary pavement will be required. If the 3 calendar days are not attainable, the first utility to disturb the pavement must place temporary hot mix by the end of the third day. Trenches will be based flush with all structures adjusted to the new grade. The entire street shall then be overlaid.

- When an existing patch (either temporary or permanent) is excavated by another permitted party, that second party shall become responsible for completion and maintenance of the patch.

5.12.5.2 Potholing to find utilities shall be allowed and patching shall follow the Standard Policy regardless of the tier that the condition would normally fall within, with the following exceptions: final patch size shall be a minimum of 2 feet square with no longitudinal joints within the wheel path, backfill shall be controlled density fill or other approved material to the bottom of the asphalt layer, round versus square cuts are preferred.

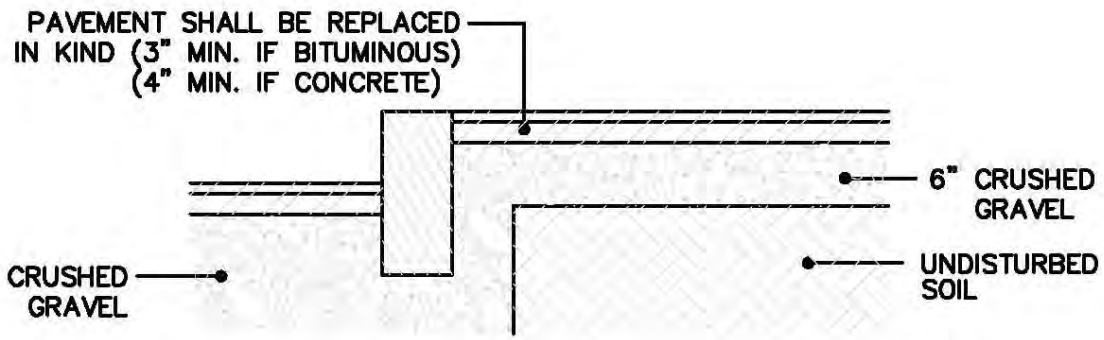

SIDEWALK REPAIR

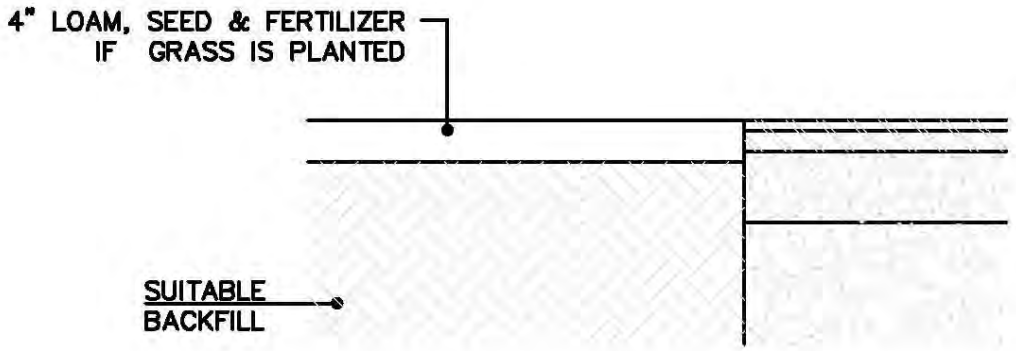

SHOULDER REPAIR

---

1. MATERIALS SHOULD BE REPLACED IN-KIND, WITH MINIMUM THICKNESS AS SHOWN.
2. PAVEMENT REPAIR IN EXISTING ROADWAYS SHALL CONFORM TO STREET OPENING REQUIREMENTS.
3. ROADWAY CONSTRUCTION SHALL CONFORM TO CITY OF MANCHESTER STANDARD SPECIFICATIONS.
4. ALL SIDEWALK CONSTRUCTION SHALL CONFORM TO THE REQUIREMENTS OF SECTION 608

SIDEWALK/SHOULDER RESTORATION

S:\DWG\DETAILS\5-5 SWLK-SHLDR-REP.DWG

NOT TO SCALE

FIGURE 5-1

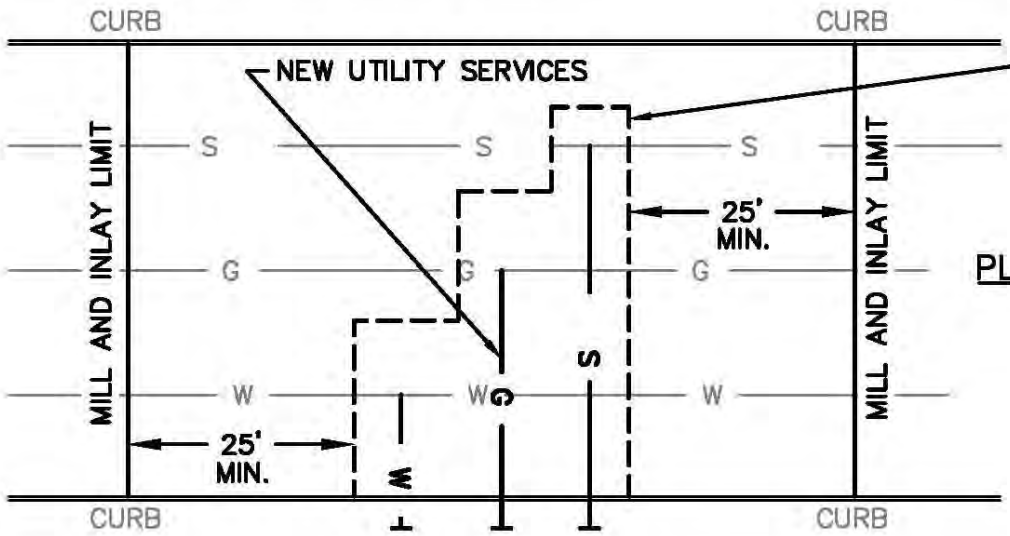

LIMIT OF BASE COURSE PATCH PLACED FLUSH. SAW CUT PAVEMENT TO CREATE CLEAN FACE. DO NOT OVERCUT CORNERS. APPLY TACK COAT TO FACE PRIOR TO PAVING.

PLAN VIEW

NOTES

1. MATERIAL THICKNESS SHOWN ARE MINIMUM.
2. PAVEMENT AND MILLING LIMITS MAY BE EXTENDED BY THE ENGINEER.
3. BASE PAVEMENT PATCH SHALL BE FLUSH WITH EXISTING SURFACE AND SIT 30 DAYS PRIOR TO MILL AND INLAY OF WEARING COURSE.
4. ALL WORK SHALL CONFORM TO CONFORM TO CITY OF MANCHESTER STANDARD SPECIFICATIONS AND THE STREET OPENING REGULATIONS.
5. TRENCH WIDTH SHALL BE 3 FEET OR UTILITY PIPE DIAMETER PLUS 2 FEET WHICHEVER IS GREATER.

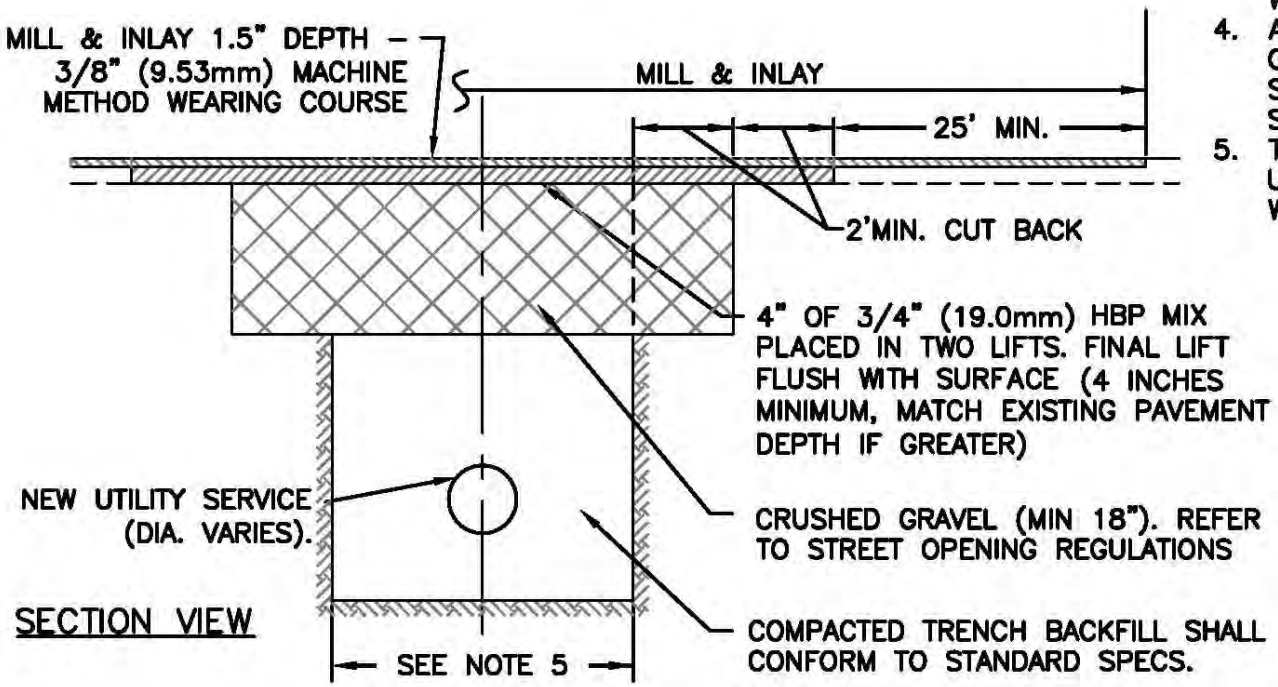

SECTION VIEW

PAVEMENT RESTORATION – MORATORIUM STREETS

NOT TO SCALE
FIGURE 5–2

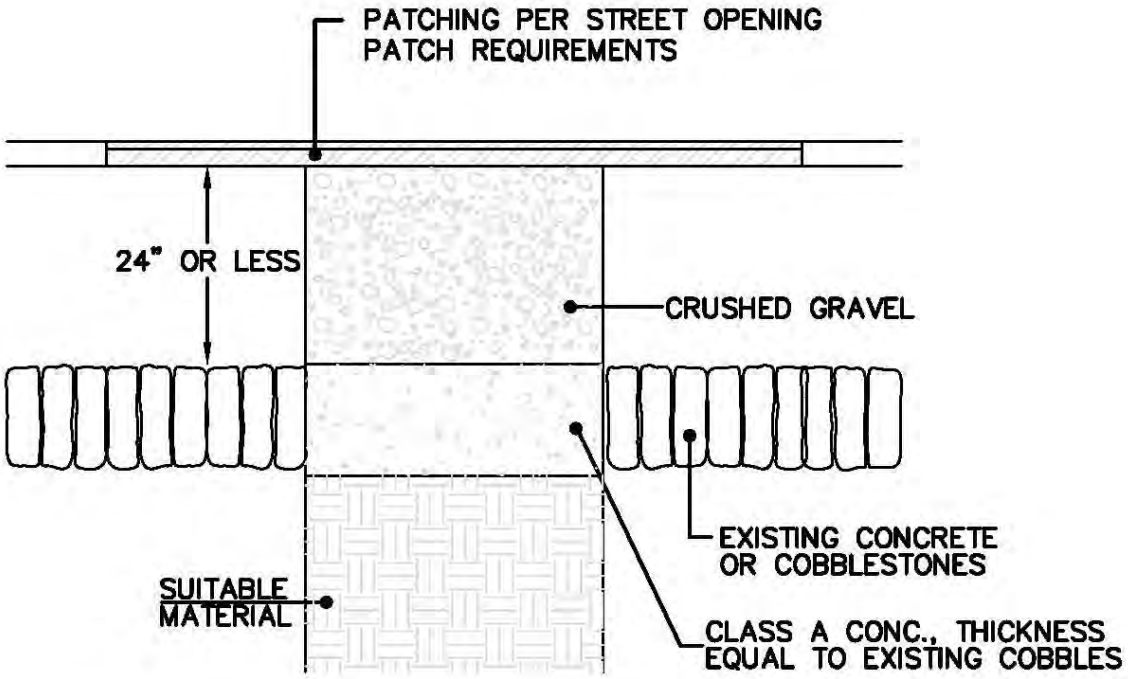

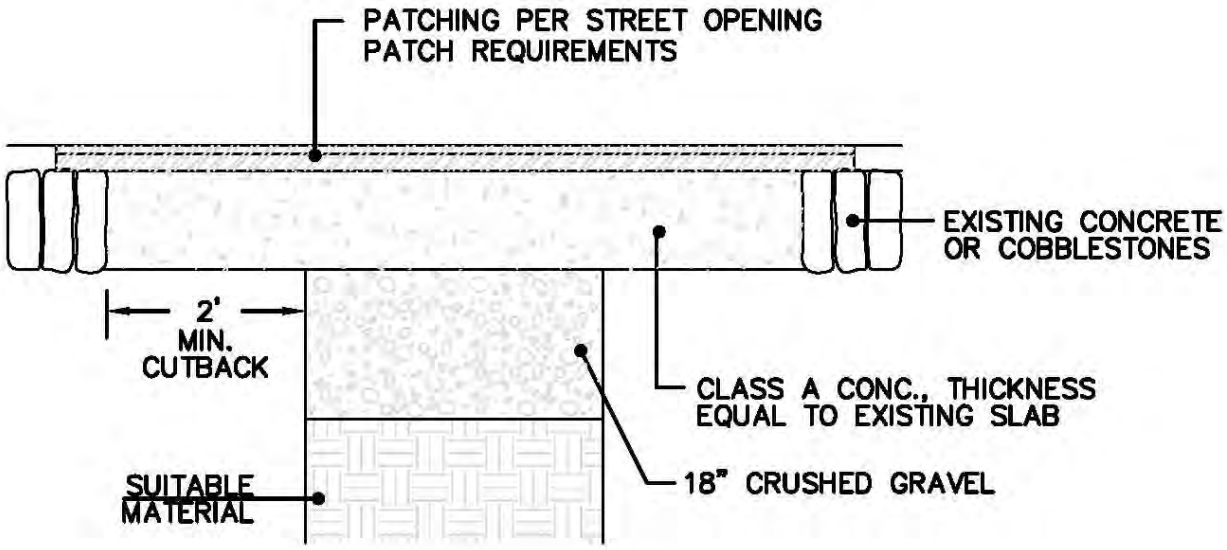

1) MATERIALS SHOULD BE REPLACED IN-KIND, WITH MINIMUM THICKNESS AS SHOWN.
2) PAVEMENT REPAIR IN EXISTING ROADWAYS SHALL CONFORM TO STREET OPENING REQUIREMENTS.
3) ROADWAY CONSTRUCTION SHALL CONFORM TO CITY OF MANCHESTER STANDARD SPECIFICATIONS.

PAVEMENT RESTORATION
CONCRETE/COBBLESTONES

S:\DWG\DETAILS\5-3 PVMT-REP.DWG

NOT TO SCALE

FIGURE 5-3

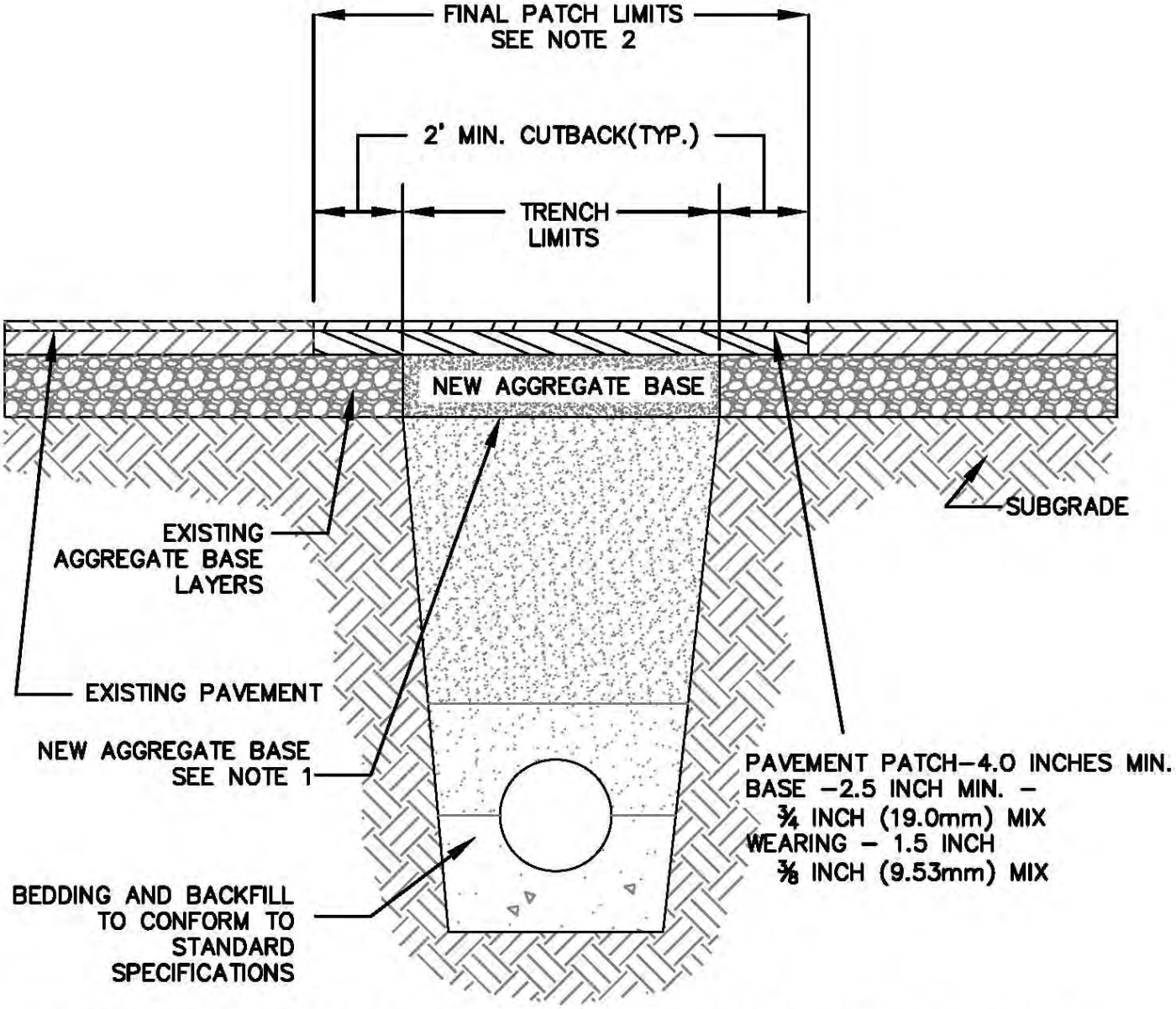

1. AGGREGATE BASE LAYER SHALL BE 12 INCHES GRAVEL TOPPED WITH 9 INCHES CRUSHED GRAVEL. IN LIEU OF THE 21 INCHES OF "GRAVEL" MATERIAL, 18 INCHES OF CRUSHED GRAVEL MAY BE ALLOWED.
2. UNLESS DIRECTED BY THE ENGINEER, FINAL PATCH DIMENSIONS SHALL BE OF SUFFICIENT WIDTH TO ALLOW PLACEMENT OF ASPHALT BY MACHINE METHOD.
3. TRENCH WIDTH SHALL BE A NO LESS THAN 20 INCHES WIDE TO ALLOW ADEQUATE COMPACTION OF TRENCH BACKFILL BY MECHANICAL MEANS.
4. CUTBACK SHALL BE A MINIMUM OF 2 FEET AT TRENCH WALL OVER UNDISTURBED SUBGRADE MATERIAL.

STANDARD TRENCH PATCH

S:\DWG\DETAILS\5-4 TRENCH PATCH.DWG

NOT TO SCALE
FIGURE 5–4

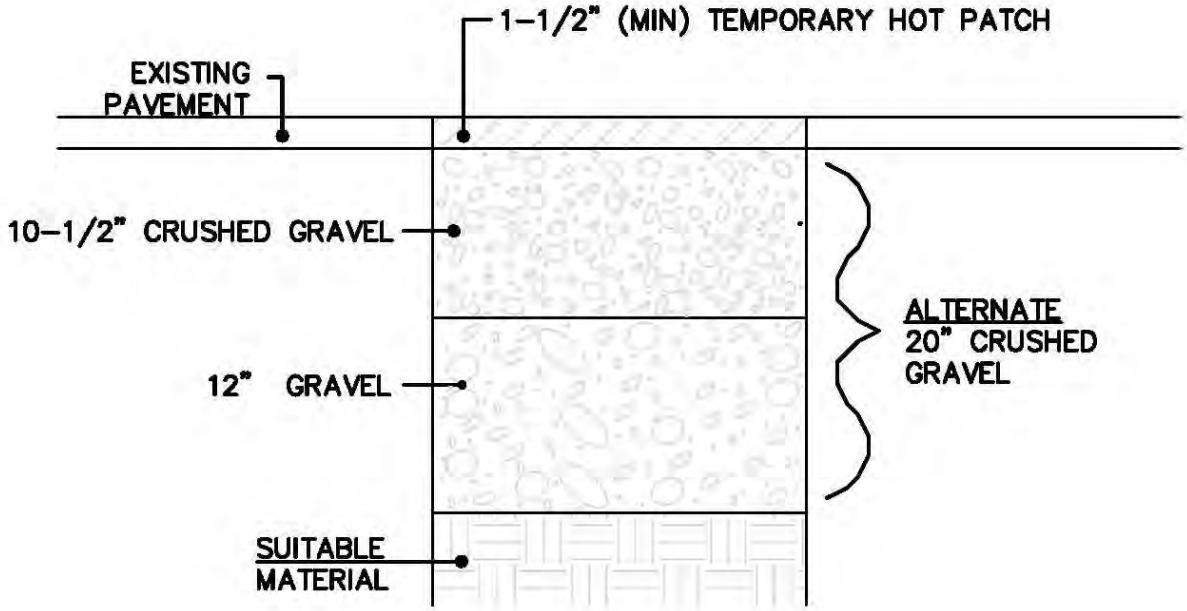

(NOT FOR WINTER CONSTRUCTION)

1) MATERIALS SHALL BE REPLACED WITH MINIMUM THICKNESS AS SHOWN.
2) PAVEMENT REPAIR IN EXISTING ROADWAYS SHALL CONFORM TO STREET OPENING REQUIREMENTS.
3) ROADWAY CONSTRUCTION SHALL CONFORM TO CITY OF MANCHESTER STANDARD SPECIFICATIONS.

TEMPORARY PAVEMENT PATCH

S:\DWG\DETAILS\5-5 TEMP PATCH.DWG

NOT TO SCALE

FIGURE 5-5

SECTION 6 - GENERAL PROVISIONS FOR CONSTRUCTION OF PUBLIC IMPROVEMENTS

6.1 Scope of Work

6.1.1 It shall be the Contractor's responsibility to provide for the construction and completion in every detail of the work described on the plans and in the specifications. The Contractor shall arrange for all underground utility installations and insure that such work conforms with the requirements and specifications of the governing utility authority. All trenching and backfilling relative to these facilities shall conform to the Standard Specification of the City of Manchester, Department of Public Works.

6.1.2 Minor alterations to the work presented on the approved plans may be made in the field during construction as specifically approved by the Engineer.

6.1.2.1 Where a major alteration to the proposed work may be necessary, either before or during construction, the Developer shall re-submit plans reflecting these changes to the City of Manchester Planning Board and/or the Department of Public Works as described in the General Requirements.

6.1.3 Before acceptance of the work, the Contractor shall remove from within the limits of the right-of-way, all machinery, equipment, surplus materials, falsework, stumps, rubbish, temporary buildings, barricades and signs. All parts of the work shall be left in a neat and presentable condition.

6.2 Control of the Work

6.2.1 Authority of the Engineer.

All work shall be done under the supervision of the Engineer and to his satisfaction. The Engineer will decide all questions which may arise as to the quality and acceptability of materials furnished and work performed and as to the rate of progress of the Work; all questions which may arise as to the interpretation of the plans and specifications; and all questions as to the acceptable fulfillment of the work on the part of the Contractor. The Engineer will have the authority to suspend the work wholly or in part for such periods as he may deem necessary due to the failure of the Contractor to correct conditions unsafe for the general public, for failure to carry out provisions of the work, for failure to carry out orders, for conditions considered unsuitable for the prosecution of the work, such as extremes of wind, temperatures or precipitation, either existing or forecasted with reasonable certainty to occur and which could be harmful to the scheduled operation; in order to comply with directives of the Division of Air Resources, State of New Hampshire, Department of Environmental Services implementing the emergency episode procedure; or for any other condition or reason deemed to be in the public interest.

6.2.2 Plans and Working Drawings.

The approved plans on file in the office of the Department of Public Works will show the location, detail and dimensions of the Work. These plans shall be supplemented by the Contractor with such additional working and detail drawings as may be found necessary to adequately control the work and its prosecution. The Contractor's drawings shall be furnished well in advance of the work to allow the Engineer time to review the drawings. When requested, the Contractor shall furnish his basic calculations. Working drawings for steel structures shall consist of shop detail, erection and other working plans showing dimensions, sizes of materials, details and other information necessary for the complete fabrication and erection of the metal work. Working drawings for concrete structures shall consist of such detailed plans as may reasonably be required for the successful prosecution of the work and which are not included in the plans on file in the office of the Department of Public Works. These may include plans for falsework, bracing, centering and form work; masonry layout diagrams and diagrams for bent reinforcement. Manufacturer's engineering data for prefabricated material including that for falsework and forms, shall be furnished with each set of drawings. The Contractor shall submit to the Engineer for approval 3 sets of any required preliminary detailed working drawings. Prior to the approval of the drawings, any work done or materials ordered for the structures involved shall be at the Contractor's risk. One set of the drawings will be returned to the Contractor approved or marked with corrections to be made. After approval has been given, the Contractor shall supply the Engineer with 3 sets of the revised detailed working drawings. The Contractor may propose detours not shown on the plans. Should he desire written approval of major detours, he shall submit plans in triplicate which shall show the proposed location, layout and signing.

The Engineer's approval of the Contractor's working drawings will not relieve the Contractor from responsibility for errors in dimensions or for incorrect fabrication processes or from responsibility to complete the work.

6.2.3 Conformity with Plans and Specifications.

All work performed and all materials furnished shall be in reasonably close conformity with the lines, grades, cross sections, dimensions and material requirements shown on the plans or indicated in the specifications. If tolerances are specified, deviations beyond the specified limits will be unacceptable. When tolerance limits are not specified and only single dimensions are indicated, such dimensions are to be regarded as nominal dimensions. In the event the Engineer finds that the materials or the finished product in which the materials are used are not within reasonably close conformity with the plans and specifications but that reasonably acceptable work has been produced, he shall then make a determination if the work shall be accepted and remain in place. In this event, the Engineer will document the basis of acceptance as he deems necessary to conform to his determination based on engineering judgement. In the event the Engineer finds that the work performed or that the materials or the finished product in which the materials are used are not in reasonably close conformity with the plans and specifications and have resulted in an inferior or unsatisfactory product, the work or materials shall be removed and replaced or otherwise corrected by the Contractor.

6.2.4 Coordination of Specifications, Supplemental Specifications, Plans and Special Provisions.

The specifications, the supplemental specifications, the plans, special provisions and all supplementary documents are essential parts of the proposed work and a requirement occurring in one is as binding as though occurring in all. They are intended to be complementary and to describe and provide for a complete work. In case of discrepancy, calculated dimensions unless obviously incorrect, will govern over scaled dimensions; supplemental specifications will govern over standard specifications; plans will govern over supplemental specifications and standard specifications; and special provisions will govern over plans, supplemental specifications and standard specifications. The Contractor shall take no advantage of any apparent error or omission in the plans or specifications. In the event the Contractor discovers such an error or omission, he shall immediately notify the Engineer. The Engineer will then make such corrections and interpretations as may be deemed necessary for fulfilling the intent of the plans and specifications.

6.2.5 Cooperation by Contractor.

The Contractor shall give the work the constant attention necessary to facilitate the progress thereof and shall cooperate with the Engineer, his inspectors and other Contractors in every way possible. Except as permitted, the Contractor shall have on the work as his agent, a competent English-speaking Superintendent capable of reading and thoroughly understanding the plans and specifications and thoroughly experienced in the type of work being performed. The Superintendent shall have full authority to receive and execute orders or directions of the engineer without delay and to promptly supply such materials, equipment, tools, labor and incidentals as may be required. Such superintendence shall be furnished irrespective of the amount of work sublet.

6.2.6 Cooperation with Utilities.

The Contractor shall notify all utility companies, all pipe line owners or other parties affected and endeavor to have all necessary adjustments of the public or private utility fixtures, pipe lines and other appurtenances within or adjacent to the limits of construction made as soon as practicable. Attention is directed to the possible existence of underground facilities not known to the City or in a location different from that which is shown on the plans or in the special provisions. The Contractor shall take steps to ascertain the exact location of all underground facilities prior to doing work that may damage such facilities or interfere with their service. "DIG SAFE" shall be notified at least 72 hours prior to the start of construction.

6.2.7 Construction Stakes, Lines and Grades.

The layout of the work shall be done by a competent land surveyor licensed in the State of New Hampshire. The Contractor shall be responsible for furnishing and setting stakes and furnishing data necessary to establish the line and grade of the finished surface, the lines and

grades of all waterways, drains, sewers and utilities, and such other points and benchmarks as are necessary to layout the work correctly. The Contractor shall also be held responsible for the preservation of all stakes and marks and establishing such other controls as may be required by the Engineer. All bounds as specified or shown on the plans shall be set by a competent land surveyor licensed in the State of New Hampshire. All required bounds shall be properly set prior to final acceptance of the work.

6.2.8 Authority and Duties of Representatives of the Engineer.

The Engineer may appoint such assistants and representatives as he desires and they shall be granted full access to the work or to mills and plants in which work is being done for use by the Contractor. They have authority to give directions pertaining to the work or to the safety and convenience of the public, to approve or reject materials, to suspend any work that is being improperly performed, and otherwise represent the Engineer. The Contractor may however, appeal their decision to the Engineer himself, but any work done pending settlement is at the Contractor's own risk. The assistants and representatives are not authorized to act as superintendents or foremen for the Contractor, or to interfere with the management of the work by the Contractor. Any advice which the assistants or representatives of the Engineer may give the Contractor, shall not be construed as binding the Engineer or the Department in any way, nor releasing the Contractor from his responsibility for the work. All transactions between the Contractor and the representatives of the Engineer which are liable to protest, shall be made in writing.

6.2.9 Inspection Agreement.

All work involving public improvements shall be inspected by the Department of Public Works and the Contractor shall execute an inspection agreement to that effect. The Contractor will be assessed the current hourly rate for inspectors, including time and one-half for overtime. To guarantee payment of the cost involved, the Contractor agrees to provide a payment bond, letter of credit or certified check (payable to the City of Manchester, Department of Public Works) in the sum of $5,000.The Contractor shall inform the inspector assigned to the project of his proposed work schedule and shall notify the Engineer at least 2 working days in advance of all work requiring inspection. If an inspector has been requested and his services have been found not to be necessary, the Engineer shall be notified at least 1 full working day prior to the scheduled time of inspection. In those cases where inspection services have been requested and the Engineer has not been notified of a cancellation at least 1 day in advance, a minimum charge of 3 hours shall be assessed. Inspection services will be provided only after all necessary permits have been obtained. Approval of work inspected by the Department of Public Works relative to site development and subdivision projects shall not be construed as partial or final acceptance of the projects. Final acceptance will be made by the City of Manchester Planning Board when all the work is satisfactorily completed per the approved plans and specifications.

6.2.10 Inspection of Work.

All materials and each part or detail of the work shall be subject to inspection by the Engineer. The Engineer shall be allowed access to all parts of the work and shall be furnished with such information and assistance by the Contractor as is required to make a complete and detailed inspection. No work shall be done at night contrary to local ordinances. No work shall be backfilled or covered without inspection by an authorized Department representative. Any work done or materials used without inspection by an authorized Department representative may be ordered removed and replaced at the Contractor's expense, unless the Department representative failed to inspect after having been given the required notice that the work was to be performed. When any unit of government or political subdivision or any railroad corporation has an interest in the work, its respective representatives shall have the right to inspect the work.

6.2.11 Removal of Unacceptable & Unauthorized Work.

All work which does not conform to the requirements of the approved plans and specifications will be considered unacceptable unless otherwise determined acceptable under the provisions in 6.2.3. Unacceptable work, whether the result of poor workmanship, use of defective materials, damage through carelessness, or any other cause found to exist prior to the final acceptance of the work, shall be removed immediately and replaced in an acceptable manner. Work done contrary to the instruction of the Engineer and work done beyond that shown on the approved plans or as given will be considered as unauthorized. Work so done may be ordered removed or replaced at the Contractor's expense.

6.2.12 Maintenance During Construction.

The Contractor shall maintain the Work during construction and until the Project is accepted. This maintenance shall constitute continuous and effective work prosecuted day by day with adequate equipment and forces, to the end that the required work and work area is kept in satisfactory condition at all times. Debris shall not be permitted to accumulate. Dust shall be controlled at all times by wetting, the use of calcium chloride or by other means acceptable to the Engineer in order to prevent a nuisance to abutters. The Contractor shall take every reasonable precaution against spillage of construction materials on existing roadways and bridges. If spillage does occur, the Contractor shall remove such spillage immediately after its occurrence and continue such removal as long as such spillage takes place. Where damage would be caused, the Contractor shall not operate equipment of such weight or so loaded as to cause damage to structures, to the roadways or to any other work. The Contractor shall be responsible for all damage done by his hauling equipment. A special permit will not relieve the Contractor of liability for damage which may result from the moving of material or equipment. During the use of existing streets and roadways, the Contractor shall maintain them in a condition satisfactory to the Engineer and safe for the travelling public. After the hauling operations are completed, he shall repair to the satisfaction of the Engineer all damage incurred by his use of these streets and roadways.

6.2.13 Failure to Maintain the Work.

If the Contractor at any time fails to comply with the provisions of 6.2.12, the Engineer may direct the Contractor to comply with the required maintenance provisions. If the Contractor fails to remedy unsatisfactory maintenance within the time specified in any order, the Engineer may immediately proceed to maintain the Work and the entire cost of this maintenance will be charged to the Contractor.

6.2.14 Acceptance.

Acceptance of the Work inspected by the Department of Public Works involved in site development and subdivision projects, shall only be in regard to conformance with the specifications and shall not be construed as partial or final acceptance of the projects. It shall be understood that although the Department of Public Works may accept the public improvement work as specified, the Contractor shall be responsible for maintaining such Work until final acceptance of the entire project by the City of Manchester Planning Board. Upon due notice from the Contractor of presumptive completion of the Work, the Engineer will make an inspection. If all construction provided for and contemplated is found complete to his satisfaction, this inspection shall constitute the final inspection and the Engineer will make the final acceptance and notify the Contractor and the Planning Board in writing of this acceptance as of the date of the final inspection. If the inspection discloses any unsatisfactory work the Engineer will give the Contractor the necessary instructions for correction of such Work, and the Contractor shall immediately comply with and execute such instructions. Upon correction of the Work, another inspection will be made which shall constitute the final inspection provided the work has been satisfactorily completed. In such event, the Engineer will make the final acceptance and notify the Contractor and the Planning Board in writing of this acceptance as of the date of final inspection.

6.3 Control of Material

6.3.1 Source of Supply and Quantity Requirements.

The materials used on the work shall meet all quality requirements of the specifications. In order to expedite the inspection and testing of materials, the Contractor shall notify the Engineer of his proposed source of materials prior to delivery. At the option of the Engineer, materials may be approved at the source before delivery is started. If it is found after trial that sources of supply for previously approved materials do not produce specified products, the Contractor shall furnish materials from other sources. No material which, after approval, has any way become unfit for use, shall be used in the work.

6.3.2 Samples, Tests, Cited Specifications.

All materials and products proposed to be used in the work shall be inspected, sampled and tested or accepted by a Certificate of Compliance letter from the Contractor as specified below. No material or product shall be incorporated in the work, unless it has been tested and approved or unless provisions have been made to accept the material by certification. Any

work in which materials are used without approval, shall be performed at the Contractor's risk and may be considered unacceptable and unauthorized.

Unless otherwise specified, all tests will be made by and at the expense of the Contractor. All samples and all testing and laboratory methods shall be in accordance with the methods prescribed by the available pertinent publications of the AASHTO, ASTM or FSS, unless other standard methods are designated except that the Engineer reserves the right to make use of any information or method of testing, to determine the quality of material or of the work. With respect to all the above specifications, whenever specifications and serial numbers are stipulated, unless specific dates are indicated, the references shall be construed to be the standard, interim or tentative specifications and serial numbers of the pertinent body as amended to date of beginning the work. Samples for testing purposes shall be furnished, at no cost, by the Contractor. All materials being used are subject to inspection, test or rejection at any time.

Random samples of materials or completed work may be taken as checks on the control sampling and testing to determine reasonable compliance with the specifications at any time prior to final acceptance of the work, either while any phase of the work is in progress or after it has been completed. The extent and locations of such random sampling will be as designated by the Engineer. Copies of all tests will be furnished to the Engineer at his request.

In all AASHTO or ASTM specifications, the section entitled: "Inspection" shall be amended to provide that tests of materials may be made in any recognized laboratory.

All sieves shall conform to the requirements of the AASHTO M 92, and shall be square hole wire cloth sieves.

When sampling and testing of seeds is required, sampling and testing methods shall be as prescribed in the Rules and Regulations established in accordance with RSA 433.

6.3.3 Certificates of Compliance.

Prior to, or at the time of field delivery, if materials are to be used in the work for which there is no prescribed schedule of testing, the Contractor shall submit 3 copies of a Certificate of Compliance for all such manufactured material. (See Appendix B) The certificate shall show the following:

a) Date of Certification
b) Description of material supplied.
c) Name of the Contractor to whom the material is supplied.
d) Project name and numbers to which the material is consigned.
e) Item number and item name.
f) Name of manufacturer and/or supplier.
g) The material meets the requirements of the pertinent specification required.
h) That records will be maintained for the defined three-year period.

i) Signature of a person having legal authority to bind the originator of the certificate.

Certificates of compliance submitted from either the manufacturer, the supplier or the Contractor in the format prescribed will be accepted. All documentation for said certificates must be maintained by the originator of the certificate for a period of not less than three years from the date the work is accepted.

Certificates of compliance covering more than one type of material or item will be acceptable if a listing is made of the item number, name of item, manufacturer and/or supplier for each material covered.

Materials listed in the above certificates may be subject to random sampling and testing by the Engineer. Certified materials which fail to meet the specification requirement will not be accepted.

Supplementing the above certificates upon request, the Engineer shall be furnished with a copy of the manufacturer's certificate of materials showing the physical properties, chemical composition, methods of testing and other relevant data.

6.3.4 Plant Inspection.

The Engineer may undertake inspection of materials at the source. In the event plant inspection is undertaken, the following conditions shall be met:

a) The Engineer shall have cooperation and assistance of the Contractor and the producer with whom he has contracted for materials.

b) The Engineer shall have full entry at all times to such parts of the plant as may concern the manufacture or production of the materials being furnished.

c) If specified, the Contractor shall arrange for an approved building for the use of the Inspector; such building to be located conveniently near the plant, independent of any building being used by the material producer, in which to house and use the equipment necessary to carry on the required tests.

d) Adequate safety measures shall be provided and maintained.

6.3.5 Storage of Materials.

Materials shall be so stored as to assure the preservation of their quality and fitness for the Work. Stored materials even though approved before storage, may again be inspected prior to their use in the Work. Stored materials shall be located so as to facilitate their prompt inspection. Approved portions of the right-of- way may be used for storage purposes and for the placing of the Contractor's plant and equipment, but any additional space required therefore, must be provided by the Contractor at his expense. Private property shall not be used for storage purposes without written permission of the owner or lessee, and if requested,

copies of such written permission shall be furnished to the Engineer. All storage sites shall be restored to their original condition by the Contractor at his expense. This shall not apply to the stripping and storing of topsoil, nor to other materials salvaged from the Work.

6.3.6 Handling Materials.

All materials shall be handled in such a manner as to preserve their quality and fitness for the Work.

6.3.7 Unacceptable Materials.

All materials not conforming to the requirements of the specifications shall be considered as unacceptable and all such materials will be rejected. They shall be removed immediately from the site of the Work as ordered by the Engineer in writing. No rejected material, the defects of which have been allowed to be corrected, shall be used until approval has been given. Should the Contractor fail to remove defective materials within the time indicated in writing, the Engineer shall have authority to cause the materials to be removed at the Contractor's expense.

6.3.8 Disposal of Surplus and Waste Materials.

Surplus and waste material shall be disposed of as directed or permitted. It shall be the Contractor's responsibility to secure disposal areas for surplus and waste materials.

6.4 Legal Relations and Responsibility to Public

6.4.1 Laws to be Observed.

The Contractor shall keep fully informed of all Federal and State laws, all local laws, ordinances and regulations, and all orders and decrees of bodies or tribunals having any jurisdiction or authority, which in any manner affect those engaged or employed on the Work or which in any way affect the conduct of the Work. He shall, at all times, observe and comply with all such laws, ordinances, regulations, orders and decrees and shall protect and indemnify the City and its representatives against any claim or liability arising from or based on the violation of any such law, ordinance, regulation, order or decree, whether by himself or his employees.

6.4.2 Permits, Licenses and Taxes.

The Contractor shall procure all permits and licenses, pay all charges, fees and taxes and give all notices necessary and incidental to the due and lawful prosecution of the Work.

6.4.3 Restoration of Surfaces Opened by Permit.

Any individual, firm or corporation wishing to make an opening in any street or roadway, must secure a permit from the Department of Public Works. The Contractor shall allow

parties bearing such permits and only those parties, to make openings in streets and roadways. The Contractor shall make in an acceptable manner all necessary repairs due such openings as directed by the Engineer.

Excavation in existing streets and roadways shall conform to the requirements of the City of Manchester, New Hampshire Street Excavation Regulations. The Contractor shall obtain street opening and/or encumbrance permits as necessary prior to excavating in City streets, rights-of-way or on City property.

6.4.4 Sanitary, Health and Safety Provision.

The Contractor shall provide and maintain in a neat, sanitary condition such accommodations for the use of its employees and Department representatives as may be necessary to comply with the requirements of the State and local Boards of health, or of other bodies or tribunals having jurisdiction.

Attention is directed to Federal, State and local laws, rules and regulations concerning safety and health standards. The Contractor's attention is directed to the following safety and health standards which apply to all contracts:

"It is a condition of this contract and shall be made a condition of each subcontract entered into pursuant to this contract, that the Contractor and any Subcontractor shall not require any laborers or mechanics employed in performance of the contract to work in surroundings or under working conditions which are unsanitary, hazardous or dangerous to their health or safety, as determine by the occupational safety and health standards, of the Occupational Safety and Health Administration, United States Department of Labor, which standards include by reference the established Federal Safety and Health Regulations for construction.

"The standards and regulations comprise Part 1910 and Part 1926 respectively of Title 24 of the Code of Federal Regulations and are set forth in the Federal Register. Subsequent to the date of this specification, in case any revisions in the Code of Federal Regulations are published, such revisions will be deemed to supersede the appropriate Part 1910 and Part 1926 and be effective as of the date set forth in the revised regulation."

6.4.5 Public Convenience and Safety.

The Contractor shall, at all times, conduct his work as to assure the least possible obstruction to traffic. A minimum of one lane of traffic shall be provided for at all times, except as may be approved by the Engineer. Uniformed officers shall be employed for traffic control as necessary or as directed by the Engineer.

The safety and convenience of the general public and the protection of persons and property shall be provided for by the Contractor. The Contractor shall be responsible for proper and timely notification to local residents prior to any interruptions of their access or services.

Fire hydrants and waterholes for fire protection on or adjacent to the Project, shall be kept accessible to the fire apparatus at all times and no obstructions shall be placed within 10 feet of any such facility. No footways, gutters, sewer inlets or portions of roadways adjoining the project under construction shall be obstructed more than is necessary. Existing road surfaces shall be maintained satisfactorily with suitable patching material when ordered.

An encumbrance permit must be obtained prior to closing all or part of a roadway to traffic. In the event that all or part of a roadway is officially closed to traffic during construction, the Contractor shall provide and maintain safe and adequate traffic accommodations for residences and businesses along and adjacent to the roadway so closed.

The Contractor shall provide all safeguards, safety devices and protective equipment and take any other actions necessary to insure the protection of the life and health of the public.

Outside the limits of the project on City streets and State highways, no vehicle used in the construction of the work shall be driven or moved unless such vehicle, when loaded with sand, gravel, rock, borrow, or other particulate substance, is so covered and secured by a close fitting tarpaulin as to prevent any of its load from dropping, sifting, leaking or otherwise escaping. The covering shall be substantial enough and fastened securely enough so that it will not become loose, detached, or in any way, a hazard to other users of the highway.

6.4.6 Railway-Highway Provisions.

All work to be performed by the Contractor in construction on the railroad right-of-way shall be performed at such times and in such manner as not to unnecessarily interfere with the movement of trains or traffic upon the track of the railway company. The Contractor shall use all care and precaution in order to avoid accidents, damage or unnecessary delay or interference with the railway company's trains or other property.

The Contractor shall secure from the Railroad, flagging service for the protection of railroad traffic during the progress of work by the Contractor on, over, under or adjacent to the tracks of the Railroad. The Contractor shall reimburse the Railroad for the expense of such service.

If the Railroad grants the Contractor's request for any temporary crossing or any temporary crossing is ordered by the New Hampshire Public Utilities Commission, the Contractor shall assume the cost of installing, maintaining, removing and protecting such temporary crossing. The type and method of protection of the crossing and the insurance required shall be as determined by the Railroad.

6.4.7 Construction Over or Adjacent to Navigable Waters.

All work over, on or adjacent to navigable waters shall be so conducted that free navigation of the waterways will not be interfered with and that the existing navigable depths will not be impaired except as allowed by the Federal agency having jurisdiction.

6.4.8 Barricades and Warning Signs.

The Contractor shall provide, erect and maintain all necessary barricades, suitable and sufficient lights, danger signals, signs and other traffic control devices and shall take all necessary precautions for the protection of the work and safety of the public. Roadways closed to traffic, shall be protected by effective barricades. Obstructions shall be illuminated during hours of darkness. Suitable warning signs shall be provided to control and direct traffic in a proper manner.

The Contractor shall erect warning signs in advance of any place on the project where his operation may interfere with traffic and at all intermediate points where the new work crosses or coincides with an existing road.

The Contractor will be held responsible for all damage to the work from traffic, pedestrians, animals or any other cause due to lack of adequate signs or barricades. All barricades, warning signs, lights, temporary signals and other protective devices shall conform with the MUTCD.

6.4.9 Protection and Restoration of Property and Landscape.

The Contractor shall use every precaution to prevent injury or damage to wires, poles or other property of public utilities; trees, shrubbery, crops and fences along and adjacent to the right-of-way, all underground structures such as pipes and conduits within or without the right-of- way; all pavement markings which may be placed upon the new pavement constructed by him; and all signs authorized or erected by the City or State; and he shall protect and carefully preserve all property marks until an authorized agent has witnessed or otherwise referenced their location.

The Contractor shall be responsible for all damage or injury to property of any nature during the prosecution of the work resulting from any act, omission, neglect or misconduct in his manner or method of executing the work or at any time due to defective work or materials and said responsibility will not be released until the project shall have been completed and accepted.

When or where any direct or indirect damage or injury is done to public or private property by or on account of any act, omission, neglect or misconduct in the execution of the work or in consequence of the nonexecution thereof by the Contractor, he shall restore at his own expense, such property to a condition similar or equal to that existing before such damage or injury was done by repairing, rebuilding or otherwise restoring as may be directed, or he shall make good such damage or injury in an acceptable manner.

The Contractor shall utilize proper tree pruning techniques to repair, all scars made on fruit or ornamental trees by equipment, construction operations or the removal of limbs larger than 1 inch in diameter. The work shall be performed as outlined in the current edition of the

American National Standard for Tree Care Operations – Tree, Shrub and Other Woody Plant Maintenance – Standard Practices: ANSI.

If the Contractor fails to repair, rebuild or otherwise restore such property as may be deemed necessary, the Engineer, after 48 hours notice, may proceed to do so and the cost thereof will be charged to the Contractor.

When the Contractor's operations encounter remains of prehistoric man's dwelling sites, artifacts or other archaeological resources, such operations shall be discontinued until a proper investigation can be made.

6.4.10 Contractor's Responsibility for Work.

Until final written acceptance of the work by the Engineer, the Contractor shall have the charge and care thereof and shall take every precaution against injury or damage to any part thereof by the action of the elements or from any other cause, whether arising from the execution or from the nonexecution of the work. The Contractor shall rebuild, repair, restore and make good all injuries or damages to any portion of the work occasioned by any of the above causes before final acceptance and shall bear the expense thereof.

Where practicable, spray applications of materials containing fertilizer, asphalt and other injurious substances which cause pitting or which impair the reflective and brightness values of metal, shall precede the installation of susceptible roadside structures such as signs, sign supports and guard rail; otherwise coverings shall be used to protect such structures installed prior to the spray applications.

In case of suspension of the Work, the Contractor shall be responsible for the Work and shall take such precautions as may be necessary to prevent damage to the Work, provide for normal drainage and shall erect any necessary temporary structures, signs or other facilities at his expense. During such period of suspension of Work, the Contractor shall properly and continuously maintain, in an acceptable growing condition, all living material in newly established plantings, seeding and sodding’s and shall take adequate precautions to protect new tree growth and other important vegetative growth against injury.

6.4.11 Contractor's Responsibility for Utility Property and Services.

It shall be the Contractor's responsibility to ascertain the existence of any underground improvements or facilities which may be subject to damage by reason of his operations. The fact that any underground facility is not shown upon the plans, shall not relieve the Contractor of his responsibility under this section.

At points where the Contractor's operations are adjacent to properties of railway, telegraph, telephone and power companies or adjacent to other property, damage to which might result in considerable expense, loss or inconvenience, work shall not be commenced until all arrangements necessary for the protection thereof have been made.

Prior to doing work that might damage underground facilities or interfere with their service, the Contractor shall take steps to have the owners verify the locations shown on the plans and identify such facilities in the field.

He shall cooperate with the owners to arrange that stakes or other markings set by the owners will be set so that maintenance of such points may be possible as long as necessary. The Contractor shall maintain such references and will be responsible for damage to any underground facility, if the owner has properly located it. The Contractor shall maintain access to the installation in order to permit maintenance of services or permit repairs in case of interruptions of service.

The Contractor shall cooperate with the owners of any underground or overhead utility lines in their removal and rearrangement operations in order that these operations may progress in a reasonable manner, that duplication of rearrangement work may be reduced to a minimum and that services rendered by those parties will not be unnecessarily interrupted.

In the event of interruption to utility services as a result of accidental breakage or as a result of being exposed or unsupported, the Contractor shall promptly notify the proper authority and shall cooperate with the said authority in the restoration of service until the service is restored. No work shall be undertaken around fire hydrants until provisions for continued service have been approved by the local fire authority.

Should the Contractor desire to have any rearrangement made in any utility facility or other improvement for his convenience in order to facilitate his construction operations, which rearrangement is in addition to or different from the rearrangements indicated on the plans or in the special provisions, he shall make whatever arrangements are necessary with the owners of such utility or other facility for such rearrangement and bear all expenses in connection therewith.

6.4.12 Personal Liability of Public Officials.

In carrying out any of the provisions of these specifications or in exercising any power or authority granted to them by or within the scope of the inspection agreement, there shall be no liability upon the Director, Engineer or their authorized representatives, either personally or as officials of the City, it being understood that in all such matters, they act solely as agents and representatives of the City.

6.4.13 Environmental Protection.

The Contractor shall comply with all Federal, State and local laws and regulations, controlling pollution of the environment. He shall take necessary precautions to prevent pollution of streams, lakes, ponds and reservoirs with fuels, oils, bitumens, chemicals or other harmful materials and to prevent pollution of the atmosphere from particulate and gaseous matter.

6.5 Prosecution and Progress

6.5.1 Subletting of Work.

No subcontracts shall, in any case, release the Contractor of his liability under the provisions of the inspection agreement.

6.5.2 Prosecution and Progress.

Prior to initiating operations on the Project, the Contractor shall furnish the Engineer with a "Schedule of Operations" for his approval. The progress schedule may be used to establish major construction operations and to check on the progress of the Work. A schedule of Erosion Control Methods may also be required for approval. The Contractor shall provide sufficient materials, equipment and labor to guarantee the completion of the project in accordance with the plans and specifications.

If the Contractor falls significantly behind the submitted schedule, the Contractor shall submit an amended schedule for approval before resuming operations.

6.5.3 Limitation of Operations.

The Contractor shall conduct the Work at all times in such a manner and in such sequence as will assume the least interference with traffic. He shall have due regard to the location of detours and to the provisions for handling traffic. The Engineer may require the Contractor to finish a section on which work is in progress before work is started on any additional sections if the opening of such section is essential to public convenience.

No work shall be performed at night and on Sundays or legal holidays except in cases of emergency and upon permission of the Engineer. Whenever a holiday is observed on a Friday or a Monday, the Contractor may be required to suspend work for 3 calendar days. Prior to the close of work, the Project shall be placed in the best condition possible for the comfort and safety of the travelling public and sound arrangements shall be made for responsible personnel to maintain the project in the above condition throughout the period of suspension.

6.5.4 Character of Workmen.

All the Contractor's personnel shall have sufficient skill and experience to perform properly the work assigned to them. Workmen engaged in special work or skilled work shall have sufficient experience in such work and in the operation of the equipment required to perform the work satisfactorily.

Any person employed by the Contractor or by any Subcontractor who, in the opinion of the Engineer, does not perform his work in a proper and skillful manner or is disorderly, shall be removed forthwith by the Contractor or Subcontractor employing such person and shall not be employed again in any portion of the Work without approval.

Should the Contractor fail to remove such person or persons as required above or fail to furnish suitable and sufficient personnel for the proper prosecution of the Work, the Engineer may suspend the Work by written notice until such orders are complied with.

6.5.5 Methods and Equipment.

All equipment which is proposed to be used on the work shall be of sufficient size and in such mechanical condition as to meet requirements of the work and to produce a satisfactory quality of work. Equipment used on any portion of the project shall be such as to cause no injury to adjacent property, other roadways or to any stage of the partially completed work.

If any equipment is not maintained in full working order or, as used by Contractor, proves inadequate to obtain results prescribed, the Engineer may order said equipment to be improved or other equipment substituted or added.

When the methods and equipment to be used by the Contractor in accomplishing the construction are not prescribed, the Contractor is free to use any methods or equipment that will accomplish the work in conformity with the requirements of the specifications.

When the specifications call for the use of certain methods and equipment, such methods and equipment shall be used unless others are authorized. If the Contractor desires to use a method or type of equipment other than those specified, he may request authorization from the Engineer to do so. The request shall be in writing and shall include a full description of the methods and equipment proposed to be used and the reasons for making the change. If approval is given, it will be on the condition that the Contractor will be fully responsible for producing construction work in conformity with the plans and specifications. If after trial use of the substituted methods or equipment, the Engineer determines that the work produced does not meet the requirements, the Contractor shall discontinue the use of the substitute method or equipment and shall complete the remaining work with the specified methods and equipment. The Contractor shall remove the deficient work and replace it with work of specified quality or take such corrective action as directed.

Failure on the part of the Contractor to observe the necessary precautions to prevent damage to property or injury to persons shall be sufficient grounds for suspension of the Work.

CITY OF MANCHESTER
DEPARTMENT OF PUBLIC WORKS

PART II - CONTRACT GENERAL PROVISIONS

SECTION 101 - BIDDING REQUIREMENTS AND CONDITIONS

101.01 Prequalification of Bidders.

In order that the Director may establish the competency of those who propose to become Bidders, all intended Bidders must submit to the Department, pursuant to the Code of Ordinances of the City of Manchester, Chapter 20-1/2-6, on a form prescribed by the Department, a statement containing a complete report of the organizational structure, past record, current and recent projects, equipment owned, leased and/or available to such Bidder. In the event that any intended Bidder fails to submit a prequalification statement as prescribed above, the Director may refuse to supply such intended Bidder with plans and Proposal Form for any projects. Prequalification regulations may be obtained by prospective Bidders on application to the Director.

The Director may make such investigations as he deems necessary to determine the ability of the Bidder to perform the work and the Bidder shall furnish to the Director all such information and data for this purpose as the Director may request. The Director reserves the right to reject any bid if the evidence submitted by or investigation of such Bidder fails to satisfy the Director that such Bidder is properly qualified to carry out the obligations of the contract and to complete the work contemplated therein. Conditional bids will not be accepted.

101.02 Contents of Proposals.

Proposals will state the location and description of the contemplated constructions, will show the approximate estimate of the various quantities and kinds of work to be performed or materials to be furnished, and will have a schedule of items for which unit bid prices are invited. The Proposal will state the contract time, the amount of the bid guaranty and the date, time and place of the opening of bids. The Proposal will include a statement regarding anti-trust activities, collusion and restraint of free competitive bidding. The Proposal will also include supplemental specifications, special provisions, and other requirements which are not contained in the standard specifications.

All papers bound with or attached to the Proposal are considered a part thereof and must not be detached or altered when the bid is submitted, except for changes authorized in writing by the Department.

The plans, specifications and other documents designated in the Proposal will be considered a part of the Proposal, whether attached or not.

The prospective Bidder will be required to pay the Department the sum stated in the invitation for bids for each set of the Proposal and plans.

101.03 Issuance of Proposals.

The Director reserves the right to deny a Proposal to a prospective Bidder or disqualify a bidder for any of the following reasons:

a) Unsatisfactory progress, or doing unsatisfactory work on projects already under contract at the time of requesting Proposals, or contracts completed within the past five (5) years.
b) Failure to pay all bills for labor and materials and damages to private property on former contracts, or to satisfactorily settle contracts in force at the time of Request for Proposal.
c) Deceptive or fraudulent statements either on the prequalification form or at any hearing before the Prequalification Committee, or on any Bid Proposal request form.
d) Failure to satisfy judgement relating to any contract.
e) Failure to provide a response to any of the information required by the Prequalification Rules and Regulations.
f) Unsatisfactory evidence that the applicant has the ability and/or capacity and/or skill to perform the contract or provide the service required.
g) Unsatisfactory evidence, based upon either past performance and/or present capability of the applicant, that the applicant can perform the work or provide the service promptly, or within the time specified, without delay or interference.
h) Unsatisfactory assurances of the character, integrity, reputation, judgement, experience or efficiency of the Bidder.
i) Unsatisfactory quality of performance of previous contracts or services.
j) Previous and/or existing non-compliance by the bidder with laws and ordinances relating to the contract or service.
k) Unsatisfactory evidence of the sufficiency of the financial resources and ability of the Bidder to perform the work or provide the service.
l) Unsatisfactory assurances of the quality, availability and adaptability of the supplies or contractual services to the particular use required.
m) Unsatisfactory assurances of the ability of the Bidder to provide future maintenance and service for the use of the contract.

Prospective Bidders who have not been prequalified may be furnished a Proposal marked as "Sample Proposal, Not for Bidding Purposes". Such sample Proposals will not be accepted by the Director as a valid bid.

101.04 Interpretation of Quantities in the Bid Schedule.

The quantities appearing in the bid schedule are approximate only and are prepared for the comparison of bids. Payment to the Contractor will be made only for the actual quantities of work performed and accepted or materials furnished in accordance with the contract. The scheduled quantities of work to be done and materials to be furnished may each be increased, decreased or eliminated as hereinafter provided and no claim for loss of anticipated profits will be allowed due to such increase or decrease. The Director specifically reserves the right to delete any portion of the work if desirable to keep expenditures within available funds.

101.05 Examination of Plans, Specifications, Proposal and Site of Work.

The Bidder is expected to examine carefully the plans, standard specifications, Proposal and site of the proposed work before submitting a bid. The bidder is responsible for all site conditions that should have been discovered had a reasonable site investigation been performed. The submission of a bid shall be considered prima facie evidence that the Bidder has made such examination and is satisfied as to the conditions to be encountered in performing the work and as to the requirements of the Proposal. It will be assumed that the Bidder has also investigated and is satisfied with the sources of supply for all materials.

Whenever subsurface borings or other subsurface information obtained by the Department is available for a Bidder's inspection, it is understood that it has been obtained with reasonable care and recorded in good faith with reasonable interpretations placed on the data in determining the character of materials and conditions to be expected. The information is made available to the Bidder only in order that the Bidder may have access to the identical information available to the Department and is not intended as a substitute for personal investigations, interpretation and judgement of the Bidders.

There is no warranty or guarantee, either expressed or implied, that the conditions indicated by such investigations or records are representative of those conditions existing throughout such areas, or any part thereof, or that unforeseen conditions will not occur, or that materials other than, or in proportions different from those indicated, will not be encountered.

The word "rock" or the word "ledge" or the symbol for rock or ledge wherever used on the plans shall be interpreted to mean only that rock may exist at the indicated elevations.

The information shown on the plans concerning type and location of underground utilities is not guaranteed to be accurate or all inclusive. The Bidder is responsible for making his own determinations as to the type and location of underground utilities as may be necessary to avoid damage thereto.

It is expressly understood and agreed that the Department assumes no responsibility whatsoever in respect to the sufficiency or accuracy of the investigation thus made, the records thereof or of the interpretations set forth therein or made by the Department in its use thereof. There is no warranty or guarantee, either expressed or implied, that the conditions indicated by such investigations or records thereof are representative of those conditions existing throughout such areas or any part thereof or that unlooked for developments may not occur or that materials other than or in proportions different from those indicated, may not be encountered.

No information derived from an inspection of records of investigations or compilation thereof made by the Department will in any way relieve the Bidder from any risk or from properly fulfilling the terms of the Proposal.

The Department will not be bound by any statement or representation concerning conditions or description of work unless they are in writing. Oral explanations or instructions given before the award of the Contract by Department employees or agents will not be binding. Every request for

interpretation shall be addressed to the contact person as listed on the Invitation for Bid. Consideration must be received at least six (6) days prior to the date fixed for opening bids. Any and all such interpretations and any supplemental instructions will be in the form of written Addenda to the specifications which, if issued, will be posted on line at City of Manchester Purchasing Department website under “Bids – Current Opportunities” section, or mailed by certified mail with "return receipt requested", or by telefacsimilie, or electronic mail with a request for acknowledgment of receipt to all prospective bidders (at the respective addresses furnished for such purposes). Adequate notice shall be given to allow contractor sufficient time to adjust his bid (if necessary) before the opening of bids. Failure of any bidder to receive any such addendum or interpretation shall not relieve any bidder from any obligation under his bid as submitted. All addenda so issued shall become part of the contract documents.

101.06 Familiarity with Laws.

The Bidder is assumed to have made himself familiar with all Federal and State laws and all local by-laws, ordinances and regulations which in any manner affect those engaged or employed on the work or affect the materials or equipment used in the work or affect the conduct of the work and no plea of misunderstanding will be considered on account of ignorance thereof. If the Bidder shall discover any provision in the plans or specifications which are in conflict with any such law, by-law, ordinance or regulation, he shall forthwith report it to the Engineer in writing.

101.07 Preparation of Bids.

The Bidder shall submit his bid upon the forms furnished by the Department. The Bidder shall specify a unit price, both in words and figures, for each pay item for which a quantity is given and shall also show the products of the respective unit prices and quantities in the column provide for that purpose. The total amount of the Proposal shall be obtained by adding the amounts of the several items. All the words and figures shall be in ink or typed. If a unit price or a lump sum bid already entered by the Bidder on the bid schedule is to be altered, it should be crossed out in ink, the new unit price or lump sum bid entered above or below it and initiated by the Bidder, also in ink. In case of discrepancy between the prices written in words and those written in figures, the prices written in words shall govern.

Bidders are expected to submit unit prices in dollars and cents. Unit prices extending more than 2 digits after the decimal will be used in computations and shown in the contract as converted to not more than 2 decimal digits, rounded as necessary, with $0.005 or more shown as the next higher cent.

All Department Addenda to the Proposal must be acknowledged by the Bidder on the appropriately noted Proposal page noted on the Addenda.

When an item in the Proposal contains a choice to be made by the Bidder, the Bidder shall indicate his choice in accordance with the specifications for that particular item.

The Bidder's bid must be signed in ink by the individual, by one or more members of the partnership, by one or more members or officers of each firm representing a joint venture, by one

or more officers of a corporation or by an agent of the Contractor legally qualified and acceptable to the Department. If the bid is made by an individual, his name and post office address must be shown; by a partnership, the name and post office address of each partnership member must be shown; as a joint venture, the name and post office address of each member or officer of the firms represented by the joint venture must be shown; by a corporation, the name of the corporation and its business address must be shown, together with the name of the state in which it is incorporated and the names, titles and business address of the president, secretary and treasurer.

101.08 Irregular Bids.

Bids will be considered irregular and shall be rejected for, but not necessarily limited to, any of the following reasons:

a) If the bid is on a form other than that furnished by the Department, or if the form is altered or any part thereof is detached or incomplete.

b) If there are unauthorized additions, conditional or alternate bids, or irregularities of any kind which may tend to make the bid incomplete, indefinite or ambiguous as to its meaning.

c) If the Bidder adds any provisions reserving the right to accept or reject an award or to enter into a contract pursuant to an award. This does not exclude a bid limiting the maximum gross amount of awards acceptable to any one Bidder at one bid letting, provided that any selection of awards will be made by the Department.

d) If the bid does not contain a unit price for each pay item listed except in the case of authorized optional pay items.

e) If the Department determines that any of the unit bid prices are Unbalanced Materially or Mathematically.

f) If the bid is not properly signed.

g) If the bid is not in ink or typed.

h) The Proposal does not include the bid documentation in a sealed container.

i) The Contractor fails to provide a properly executed Proposal guaranty.

j) The Proposal fails to comply with any other material requirement of the Invitation for Bids.

k) Mathematical errors.

101.09 Proposal Guaranty.

No bid will be considered unless accompanied by a bid guaranty in an amount not less than the amount indicated in the Proposal made payable to the "City of Manchester, New Hampshire". If a bond is used by the Bidder, it shall be prepared as follows:

a) The bond shall be completed in a form acceptable to the Director, and

b) The bonding company issuing the bond shall be licensed to transact business in the State of New Hampshire.

c) In the event that any irregularities are contained in the bid guaranty, the Bidder will have seven (7) calendar days from the time the bids are opened to correct the irregularities. If such irregularities are not corrected to the satisfaction of the Director, the bid will be rejected.

101.10 Delivery of Bids.

All bids must be submitted in sealed envelopes bearing on the outside the name of the Bidder, his address and the name of the project for which the bid is submitted. When sent by mail, the sealed envelope containing the Proposal must be enclosed in another envelope and addressed to the Department at the address shown on the Invitation for Bids. All bids shall be received prior to the time and at the place specified in the invitation for bids. Bids received after the time for opening of bids will be returned to the Bidder unopened.

101.11 Withdrawal of Bids.

A Bidder will be permitted to withdraw his bid unopened after it has been submitted if such a request is received in writing prior to the time specified for opening bids.

101.12 Combination of Proposals.

If the Departments so elects, Proposals may be issued for projects in combination or separately so that bids may be submitted either on the combination or on separate units of the combination. The Director reserves the right to make awards on combination bids or separate bids to the best advantage of the City. No combination bids other than those specifically set up in the Proposals by the Department, will be considered separate contracts and will be written for each individual project included in the combination.

101.13 Public Opening of Bids.

Bids will be opened and read publicly at the time and place indicated in the invitation for bids. Bidders, their authorized agents, and other interested parties are invited to be present.

101.14 Disqualification of Bidders.

The Bidder shall be disqualified and his bid or bids rejected for, but not necessarily limited to, either of the following reasons:

a) More than one bid for the same work from an individual, firm or corporation under the same or different name.

b) Collusion among Bidders. Participants in collusion will be disqualified as Bidders for any future work of the Department until any such participant shall have been reinstated as a qualified Bidder.

101.15 Materials Statement.

The successful bidder shall, when requested, furnish a complete statement of the origin or supplier of materials to be used in the construction of the work, together with samples to be tested for conformance with the Contract provisions.

SECTION 102 -- AWARD AND EXECUTION OF CONTRACT

102.01 Consideration of Proposals.

After the Proposals are opened and read, they will be computed on the basis of summation of the products of the quantities shown in the bid schedule by the unit bid prices. The results of such comparisons will be available to the public. In case of a discrepancy between the prices written in words and those written in figures, the prices written in words shall govern. In case of discrepancy between the total shown in the Proposal and that obtained by adding the products of the quantities of items and the unit bid prices, the latter shall govern. The right is reserved to reject any or all Proposals if, in the judgement of the Director, the best interests of the City will be promoted thereby.

102.02 Award of Contract.

Within 60 calendar days after the opening of Proposals, if a contract is to be awarded, the award will be made to the prequalified bidder with the lowest price responsive Proposal that complies with the requirements prescribed. The successful Bidder will be notified, by letter mailed to the address shown on his submitted Proposal, that his Proposal has been accepted and that he has been awarded the contract.

102.03 Cancellation of Award.

The Director reserves the right to cancel the award of any contract before the execution of such contract without any liability against the Department.

102.04 Return of Proposal Guaranty.

All Proposal Guaranties, except those of the three lowest Bidders, will be returned within 15 calendar days following the opening of Proposals.

The retained Proposal Guaranties of the three lowest Bidders will be returned within 10 calendar days following the execution of a contract. A Contractor will not be released from its bidding obligations because of errors in the preparation of the Proposal without forfeiting the Proposal Guaranty.

102.05 Requirement of Contract Bonds.

At the time of the execution of the contract, the successful Bidder shall furnish a performance bond guaranteeing the execution, faithful performance and completion of the work to be done under the Contract, and a payment bond guaranteeing payment in full of all bills and accounts for materials and labor used in the work. Each of the bonds shall be in a sum equal to the full amount of the contract and shall meet the following requirements:

a) The form of the bonds shall be as prescribed by the Director, and

b) The bonding company issuing the bonds shall be licensed to transact business in the State of New Hampshire.

In the event the bonding company fails or becomes financially insolvent, the Contractor shall, within 30 calendar days of such failure, or insolvency, file a new and sufficient bond in the amount designated by the Director.

102.06 Execution and Approval of Contract.

The successful Bidder shall furnish the required contract bonds, insurance certificates and, if a corporation, certificates of acknowledgment along with a resolution of the directors evidencing authority of the officer signing the contract to do so (Certificate of Vote, See Appendix B)and sign the contract within 10 calendar days after the date of notice that the contract has been awarded. No contract shall be considered as effective until it has been fully executed by all of the parties to the contract.

102.07 Failure to Execute Contract.

Failure on the part of the Contractor to execute the contract and file acceptable bonds within 10 calendar days after the date of notice that the contract has been awarded shall be just cause for the cancellation of the award and the forfeiture of the Proposal Guaranty which shall become the property of the City, not as a penalty, but in liquidation of damages sustained. The Director may then decide to award the contract to the next lowest responsible Bidder or the Work may be re-advertised

SECTION 103 -- SCOPE OF WORK

103.01 Intent of Contract. The intent of the Contract is to provide for the construction and completion in every detail of the work described. The Contractor shall furnish labor, materials, equipment, tools, transportation and supplies required to complete the work in accordance with the terms of the contract.

103.02 Revisions to the Contract

(A) **General**. The Department reserves the right to revise the Contract at any time. Revisions to the Contract neither invalidate the Contract nor release the surety, and the Contractor agrees to perform the Work as revised. The Contractor shall not proceed with the revised Work until directed to do so by the Engineer, but shall continue with all work unaffected by the revision.

If the Contractor believes that it has encountered circumstances that necessitate a revision to the Contract, the Contractor shall immediately notify the Engineer in accordance with subsection 103.02.(G). If the Contractor believes it has encountered a Differing Site Condition as set forth in 103.02.(B), Significant Changes in the Character of Work as set forth in 103.02.(D), or Suspensions of Work Ordered by the Engineer as set forth in 103.02.(C), the Contractor shall provide notice as required by these clauses and as required by 103.02.(G). Failure to provide notice as specified in 103.02.(G) constitutes a waiver of the Contractor's entitlement to compensation or a time extension and releases the City from responsibility for providing compensation or a time extension for any related claims filed under 104.16.

If the Engineer concludes that the Contract should be revised, as provided in 103.02.G.4, compensation will be provided in accordance with 108.04, and time extensions will be granted in accordance with 107.08. In addition, the term "adjustment" as used in 103.02.(B), (C), and (D) is defined as a time extension in accordance with 107.08 and compensation in accordance with 108.04. In 103.02.(D), the phrase, "as provided elsewhere in the Contract," means as provided in 107.08 with regard to time extensions and in 108.04 with regard to compensation.

With regard to 103.02.(C), Suspensions of Work, an adjustment is provided for suspensions or delays "caused by conditions beyond the control of and not the fault of the Contractor, its suppliers, or Subcontractors at any approved tier, and not caused by weather." The Contractor is also not entitled to an adjustment for suspensions or delays caused by the reasons set forth in 107.08.B, Excusable, Non-Compensable Delays.

The Department may revise the Contract for any of the reasons specified in 103.02.(B). Differing Site Conditions; (C). Suspension of Work; (D). Significant Changes in the Character of Work; (E). Extra Work, or (F). Elimination of Work.

(B) **Differing Site Conditions.**

During the progress of work, if subsurface or latent physical conditions are encountered at the site differing materially from those indicated in the contract or if unknown physical conditions of an unusual nature, differing materially from those ordinarily encountered and generally recognized as inherent in the work provided for in the Contract, are encountered at the site, the party discovering such conditions shall promptly notify the other party in writing of the specific differing conditions before they are disturbed and before the affected work is performed.

Upon written notification, the Engineer will investigate the conditions and if he/she determines that the conditions materially differ and cause an increase or decrease in the cost or time required for the performance of any work under the contract, an adjustment, excluding loss of anticipated profits, will be made and the contract modified in writing accordingly. The Engineer will notify the Contractor of his/her determination whether or not an adjustment in the contract is warranted.

No contract adjustment which results in a benefit to the Contractor will be allowed unless the Contractor has provided the required written notice.

No contract adjustment will be allowed under this clause for any effects caused on unchanged work.

(C) **Suspensions of Work.**

If the performance of all or any portion of the work is suspended or delayed by the Engineer in writing for an unreasonable period of time (not originally anticipated, customary, or inherent to the construction industry) and the Contractor believes that additional compensation and/or contract time is due as a result of such suspension or delay, the Contractor shall submit to the Engineer in writing a request for adjustment within 7 calendar days of receipt of the notice to resume work. The request shall set forth the reasons and support for such adjustment.

Upon receipt, the Engineer will evaluate the Contractor's request. If the Engineer agrees that the cost and/or time required for the performance of the contract has increased as a result of such suspension and the suspension was caused by conditions beyond the control of and not the fault of the Contractor, its suppliers or subcontractors at any approved tier and not caused by weather, the Engineer will make an adjustment (excluding profit) and modify the contract in writing accordingly. The Engineer will notify the Contractor of his/her determination whether or not an adjustment of the contract is warranted.

No contract adjustment will be allowed unless the Contractor has submitted a request for adjustment within the time prescribed.

No contract adjustment will be allowed under this clause to the extent that performance would have been suspended or delayed by any other cause, or for which an adjustment is provided for or excluded under any other term or condition of the contract.

The City may delay the beginning of the work, or any part thereof, if the necessary lands or rights-of-way for such work shall not have been obtained or if materials or equipment to be furnished by the City are not delivered. The Contractor shall have no claims for damages on account of such delay, but shall be entitled to so much additional time wherein to perform and complete the work as determined by the Engineer in writing.

Should the City be prevented or enjoined from proceeding with work or from authorizing its prosecution either before or after its prosecution, by reason of any litigation, the Contractor shall not be entitled to make or assert claim for damage by reason of said delay, but time for completion of the work will be extended to such reasonable time as the City may determine will compensate for time lost by such delay with such determination to be set forth in writing.

Delays in the work due to the absence of the Contractor or his duly authorized superintendent or foreman shall not constitute a reason for extension of time for completion.

(D) **Significant Changes in Character of Work.**

The Engineer reserves the right to make, in writing, at any time during the work, such changes in quantities and such alterations in the work as are necessary to satisfactorily complete the project. Such changes in quantities and alterations shall not invalidate the contract nor release the Surety, and the Contractor agrees to perform the work as altered.

If the alterations or changes in quantities significantly change the character of the work under the contract, whether or not changed by any such different quantities or alterations, an adjustment, excluding loss of anticipated profits, will be made to the contract. The basis for the adjustment shall be agreed upon prior to the performance of the work. If a basis cannot be agreed upon, then an adjustment will be made either for or against the Contractor in such amount as the Engineer may determine to be fair and equitable.

If the alterations or changes in quantities do not significantly change the character of the work to be performed under the Contract, the altered work will be paid for as provided elsewhere in the Contract.

The term "significant change" shall be construed to apply only to the following circumstances:

a) When the character of the work as altered differs materially in kind or nature from that involved or included in the original proposed construction or

b) When a Major Item of work is increased in excess of 125 percent or decreased below 75 percent of the original Contract quantity. Any allowance for an increase in quantity shall apply only to that portion in excess of 125 percent of original Contract item quantity, or in case of a decrease below 75 percent, to the actual amount of work performed.

(E) **Extra Work.** If the Contractor believes that it has been required to perform work not originally in the Contract but found to be essential for the completion of the Contract, the Contractor shall notify the Engineer in accordance with 103.02.(G). Failure to provide notice as specified in 103.02.(G) constitutes a waiver of the Contractor's entitlement to compensation or a time extension and releases the Department responsibility for providing compensation or a time extension for any related claims filed under 104.16. If the Engineer determines that Extra Work is required, the Engineer will compensate the Contractor for the Extra Work in accordance with 108.04. Time extensions, if warranted, will be determined in accordance with 107.08.

(F) **Eliminated Items.** The Department may partially or completely eliminate Contract Pay Items. When notified of the elimination of a Contract Pay Item, if the Contractor believes that such elimination will necessitate a revision to the Contract Amount, the Contractor shall provide notice in accordance with 103.02.(G). Failure to provide notice as specified in 103.02.(G) constitutes a waiver of the Contractor's entitlement to compensation or a time extension releases the Department from responsibility for providing compensation or a time extension for any related claims filed under 104.16. The Department will reimburse the Contractor for the actual Work completed in accordance with 108.04.

(G) **Contractor Notification.**

1. **Contractor Initial Notification**. The Contractor shall provide immediate oral or written notification to the Engineer upon discovering a circumstance that the Contractor believes will require a revision to the Contract. Upon notification, the Engineer will attempt to resolve the identified issue as quickly as possible. No further work is to be performed or expense incurred related to the alleged revision unless directed otherwise in writing by the Engineer.

2. **Contractor Notice.** If the Engineer has not resolved the identified issue within 2 working days the initial notification was given by the Contractor, then the Contractor shall provide written notice to the Engineer of any circumstance that may require a revision to the Contract and shall contain the following information:

A. No further work is to be performed or expense incurred related to the alleged revision unless directed otherwise in writing by the Engineer.

B. Immediately notify the Engineer in writing of the alleged revision occasioned by the site conditions or actions by the Department and, within five days of the date that the

alleged revision or action was noted, provide the following information to the Engineer in writing:

1. The date of occurrence and the nature and circumstances of the occurrence that constitute a revision.
2. Name, title, and activity of each Department representative knowledgeable of the alleged revision
3. Identify any documents and the substance of any oral communication involved in the alleged revision.
4. Basis for belief that a delay occurred and a time extension is due. Also, provide the basis for any contention that accelerated performance was necessary and compensation due.
5. Basis for belief that the work is not required by the Contract.
6. Particular elements of Contract performance for which additional compensation may be sought under this Section including:

    a. Pay item(s) that has been or may be affected by the alleged revision.
    b. Labor or materials, or both, that will be added, deleted, or wasted by the alleged revision and what equipment will be idled or required.
    c. Delay and disruption in the manner and sequence of performance that has been or will be caused.
    d. Increases to Contract Amount(s), delivery schedule(s), staging, and Contract Time estimated due to the alleged revision.
    e. Estimate of the time within which the Department must respond to the notice to minimize cost, delay, or disruption of performance.

The Engineer and Contractor shall maintain records of labor, equipment, and materials used or made necessary by the circumstance. Such record keeping shall start when notice is received by the Engineer.

3. **Written Acknowledgement, by Engineer.** The Engineer will acknowledge in writing the receipt of the Contractor's written notice.

4. **Final Written Response, by Engineer.** Within 5 working days of receiving the Contractor's written notice, unless the Contractor agrees to a longer time period, the Engineer will provide a written response that includes one of the following:

a. Confirmation of the need for a revision to the Contract. A time extension, if one is necessary, will be determined in accordance with 107.08. Compensation for the revision, if any is necessary, will be determined in accordance with 108.04. The Engineer will give direction to the Contractor regarding how to proceed with Work affected by the revision.

b. Denial of the request for a revision to the Contract, in which case the Engineer will explain why the issue does not represent a revision to the Contract. Upon receipt of

such a denial, the Contractor shall immediately proceed with all Work that may have been halted due to the circumstances for which the Contractor provided notice.

c. A request for additional information or time for review, in which case the Engineer will identify what is needed and by when; the Engineer will issue a response within 5 working days of receiving the additional requested information.

5. **Contract Revisions Without Notification.** The Department will not make revisions to the Contract Amount or Contract Time allowed by 103.02.(B), 103.02.(C), 103.02.(D), 103.02.(E), 103.02.(F), 103.04, 103.06, 104.06 and 104.08 if the Contractor did not give notice as specified in 103.02.(G).

6. **Contractor's Recourse.** If the Contractor disagrees with the Engineer's final response or the Engineer's response is untimely, the Contractor may pursue a claim in accordance with 104.16.

103.03 Maintenance of Traffic.

The Contractor shall keep all roads open to all traffic during construction. Where provided in the Contract, or approved by the Engineer, traffic may be bypassed over an approved detour route. The Contractor may propose to construct detours not shown on the Plans. The Contractor shall submit proposed detour plans for documentation in accordance with 104.02, which shall show the proposed location of protective fixtures and signing. The section of the project being used by public traffic shall be kept in a condition that safely and adequately accommodates traffic. The Contractor shall furnish, erect, and maintain barricades, warning signs, delineators, striping, flaggers in accordance with the MUTCD and Section 618,Section 619 and Section 632. The Contractor shall bear all expense of maintaining the section of road undergoing improvement including all intersections with trails, roads, streets, parking lots, vehicular or pedestrian access points to residences or businesses, and other features as may be necessary. Payment for the furnishing, installation, and maintenance of traffic control will be as provided in Section 619. No other compensation for maintenance will be made except as when special maintenance for the benefit of the traveling public not otherwise included in the Contract, is directed by the Engineer. Payment will be on the basis of Contract unit prices or under Subsection 103.02.(D) Significant Changes in the Character of Work. The Engineer will determine the work to be classed as special maintenance

When the maintenance of traffic is considered by the Department to be of minor significance, certain Contracts may not show this work as a pay item. In such cases, the Contractor shall bear all expense of maintaining traffic as described in this section, without direct compensation.

103.04 Rights In and Use of Materials Found on the Project.

Upon approval, the Contractor may use on the project such stone, gravel, sand or other material as may be found in the limits of excavation and which is not otherwise specifically reserved by the plans or specifications and payment will be made at the corresponding contract unit prices, both for the excavation of such materials and for the item for which the excavated material is used. No charge will be made against the Contractor for the materials found in the limits of

excavation and so used. However, he shall replace at his own expense with other acceptable material all of that portion of the excavated material so removed and used which was intended for use in embankments, backfills, approaches or the like.

Without written authorization, the Contractor shall not excavate or remove any material from within the project location which is not within the grading limits indicated by the slope and grade lines. Material authorized to be removed outside the grading limits may be subject to compensation from the Contractor at the stipulated price in the contract or at an agreed price at the time of authorization.

It is expressly understood that the Contractor cannot make claim for damages or for anticipated profits on account of the expected use of any materials shown on the plans as existing and later found to be nonexistent or unfit for use.

Unless otherwise provided, the material from any existing old structures scheduled for demolition or removal may be used temporarily by the Contractor in the erection of the new structure. Such material shall not be modified or otherwise damaged without approval.

Unless otherwise specified or permitted, title to all structures found on the project shall remain vested in the City or other owner. All catch basin frames and grates, drop inlet frames and grates and manhole frames and covers, curbing, beam guardrail, guardrail fittings and pipe, traffic control devices, and all other materials designated to be salvaged, unless otherwise specified or directed, shall be carefully salvaged and stored within the limits of the project area. Unless specifically provided for in the contract, this work will not be paid for separately but shall be considered subsidiary.

103.05 Final Cleaning Up.

Before acceptance of the work, the Contractor shall remove from within the limits of the project all machinery, equipment, surplus materials, falsework, stumps, rubbish, temporary buildings, barricades and signs. All parts of the work shall be left in a neat and presentable condition. The Contractor shall clean up all plant and storage sites and all other areas used regardless of the project limits. The work prescribed herein will not be paid for separately but shall be considered as subsidiary.

103.06 Contractor's Responsibility for Work. Until Final Acceptance of the project by the Engineer, the Contractor is responsible for and shall protect the Work against injury or damage from all causes whether arising from the execution or the non-execution of the Work.
The Contractor, at their expense, shall rebuild, repair, restore, and make good all losses, injuries, or damage to any portion of the Work from any cause before Acceptance, except for loss, injury, or damage due to causes not under the control and without the fault or negligence of the Contractor. Causes not under the control of the Contractor include, but are not restricted to the following:

A. **Damage by Occurrence.** This includes damage to the work in progress that is caused by natural disasters such as earthquake, tidal wave, tornado, hurricane, or

other cataclysmic phenomenon of nature; acts of a public enemy; and acts of governmental authorities.

B. **Damage by Public Traffic.** This includes damage to any permanent element which is completed to the stage of serving its intended function and is subsequently damaged by public traffic.

The Contractor shall repair damage due to such excepted causes and shall be paid at the Contract prices or as provided for in 103.02 as determined and ordered by the Engineer. The Contractor will be reimbursed for damage caused by public traffic (not by vandalism or the Contractor's equipment) if unsuccessful in collecting the cost of repair from the responsible party. In order to be reimbursed, the Contractor must have made every reasonable effort to collect the costs from the person or persons responsible for the damage. A reasonable effort will be considered to have been made if the Contractor certifies that the Manchester Police Department has been contacted in order to obtain the identity of the responsible person or persons, has corresponded in writing via certified mail with the responsible party and or his/her insurance company, if this information is available, and has failed to recover the cost of damages in spite of these efforts.
In case of suspension of the Work from any cause, the Contractor is responsible for the Work under the Contract and shall prevent damage to the project, provide for normal drainage, and erect necessary temporary structures, signs, or other facilities. The Contractor shall also maintain in an acceptable growing condition all living material in newly established plantings, seeding, and sodding furnished under the Contract, and protect new tree growth and other designated vegetative growth against injury.

103.07 Environmental Protection. The Contractor shall comply with all Federal, State, local laws, and regulations controlling pollution of the environment; and preventing the spread of prohibited invasive plants as listed by the New Hampshire Department of Agriculture. Pollution of streams, lakes, ponds, and reservoirs with fuels, oils, bitumens, chemicals, suspended silt, or other harmful materials and pollution of the atmosphere from particulate and gaseous matter shall be avoided to the extent practicable. Detailed requirements implementing this policy are outlined in Section 106 and Contract documents.

103.08 Value Engineering Proposals by Contractor.

The intent of this specification is to share with the Contractor any cost savings generated on this contract as a result of a proposal or proposals offered by the Contractor and approved by the Department. The purpose is to encourage the use of the Contractor's ingenuity and experience in arriving at alternative, lower cost construction methods than those reflected in the contract documents by the sharing of savings resulting therefrom.

The value engineering proposals contemplated are those that could produce a savings to the Department without, in the sole judgement of the Department, impairing essential functions and characteristics of the facility including but not limited to, service life, economy of operation, ease of maintenance, desired appearance and safety.

As a minimum, the following materials and information shall be submitted with each proposal, plus any additional information requested by the Department:

a) A statement that the proposal is submitted as a Value Engineering Proposal.

b) A description of the difference between the existing contract requirements and the proposed change and the comparative advantages and disadvantages of each including considerations of service life, economy of operations, ease of maintenance, desired appearance and safety.

c) A complete set of plans and specifications showing the proposed revisions relative to the original contract features and requirements.

d) A complete cost analysis indicating the final estimate costs and quantities to be replaced by the proposal, the new costs and quantities generated by the proposal and the cost effects of the proposed changes on operational, maintenance and other considerations.

e) A statement of the time by which a change order adopting the proposal must be executed so as to obtain the maximum cost reduction during the remainder of the contract. This date must be selected to allow the Department ample time for review and processing a change order without affecting the Contractor's schedule. Should the Department find that insufficient time is available for review and processing, it may reject the proposal solely on such basis. If the Department fails to respond to the proposal by the date specified, the Contractor shall consider the proposal rejected and shall have no claim against the Department as a result thereof.

f) A statement as to the effect the proposal will have on the time for completion of the contract.

g) A description of any previous use or testing of the proposal on another Department project or elsewhere and the conditions and results therewith. If the proposal was previously submitted on another Department project, indicate the date, contract number and the action taken by the Department.

Value Engineering Proposals will be considered only when all of the following conditions are met:

a) The Contractor is cautioned not to base any bid prices on the anticipated approval of a Value Engineering Proposal and to recognize that such proposal may be rejected. In the event of rejection, the Contractor will be required to complete the contract in accordance with the plans and specifications at the prices bid. Proposals shall only be considered by the Department after the Contract has been awarded to the Contractor.

b) All proposals, approved or not approved by the Department for use in the contract, become the property of the Department and shall contain no restrictions imposed by the Contractor on their use or disclosure. The Department shall have the right to use,

duplicate and disclose in whole or in part any data necessary for the utilization of the proposal. The Department retains the right to utilize any accepted proposal or part thereof on any other or subsequent projects without any obligation to the Contractor. This provision is not intended to deny rights provided by law with respect to patented materials or processes.

c) If the Department already has under consideration certain revisions to the contract or has approved certain changes in specifications or standards for general use which are subsequently incorporated in a Value Engineering Proposal, the Department shall reject the Contractor's proposal and may proceed with such revisions without any obligation to the Contractor.

d) The Contractor shall have no claim against the Department for any costs or delays due to the Department's rejection of a Value Engineering Proposal, including but not limited to, development costs, anticipated profits or increased material or labor costs resulting from delays in the review of such proposal.

e) The Department shall be the sole judge as to whether a proposal qualifies for consideration and evaluation. It may reject any proposal that requires excessive time or costs for review, evaluation and/or investigations or which is not consistent with the Department's design policies and basic design criteria for the project.

f) The Engineer may reject all or any portion of work performed pursuant to an approved Value Engineering Proposal if he determines that unsatisfactory results are being obtained. The Engineer may direct the removal of such rejected work and require the Contractor to proceed in accordance with the original contract requirements without reimbursement for any work performed under the proposal, or for its removal. Where modifications to the Value Engineering Proposal are approved in order to adjust to field or other conditions, reimbursement will be limited to the total amount payable for the work at the contract bid prices as if it were constructed in accordance with the original contract requirements. Such rejection or limitation of reimbursement shall not constitute the basis of any claim against the Department for delay of for any other costs.

g) The proposal shall not be experimental in nature but shall have been proven to the Department's satisfaction under similar or acceptable conditions on another Department project or at another location acceptable to the Department.

h) Proposals shall be considered only if equivalent options are not already provided in the contract documents.

i) The savings generated by the proposal must be of sufficient significance, in the sole judgement of the Department, to warrant review and processing.

j) A proposal changing the types and/or thickness of the pavement structure will not be considered.

k) If additional information is needed to evaluate proposals, this information must be provided in a timely manner. Failure to do so will result in rejection of the proposal. Such additional information could include, where design changes are proposed, results of field investigations and surveys, design computations and field change sheets.

l) Approval or disapproval of a Value Engineering Proposal on one Contract does not guarantee approval or disapproval on another Contract.

m) Approval of a Value Engineering Proposal in concept in no way obligates the Department to approve the fully designed Value Engineering Proposal.

n) Value Engineering Proposals that only reduce or eliminate Contract pay items will not be considered.

o) If a Value Engineering Proposal creates a significant change as defined in 103.02 that would not have otherwise resulted, the Contractor has no entitlement for additional compensation as provided for in 103.02.

If the Value Engineering Proposal is accepted by the Department, the changes and payment thereof will be authorized via a change order. Reimbursement to the Contractor will be made as follows:

a) The changes will be incorporated into the contract via changes in the quantities of unit bid items or by supplementary agreement as appropriate, in accordance with the specifications.

b) The costs of the revised work as determined from the aforementioned changes in quantities and any new items will be paid directly. In addition to such payment, the Department will pay to the Contractor, via a separate item, 50 percent of the savings to the Department as reflected by the difference between the above payment and the cost of the related construction required by the original contract plans and specifications computed at contract bid prices.

c) The Contractor's costs for development, design and implementation of the Value Engineering Proposal are not eligible for reimbursement.

d) The Contractor may submit Value Engineering Proposals for an approved subcontractor, provided that reimbursement is made by the Department to the Contractor. Subcontractors may not submit a proposal except through the Contractor.

e) Payments for Value Engineering Proposals are for direct savings or costs. Indirect saving or costs (time, user costs, etc.) will not be included in payment calculations.

SECTION 104 -- CONTROL OF THE WORK

104.01 Authority of Engineer.

All work shall be done under the supervision of the Engineer and to their satisfaction. The Engineer will decide all questions which may arise as to the quality and acceptability of materials furnished and work performed and as to the rate of progress of the work; all questions which may arise as to the interpretation of the Contract documents; and all questions as to the acceptable fulfillment of the Contract on the part of the Contractor

The Engineer will have the authority to suspend the work wholly or in part for such periods as he may deem necessary due to failure of the Contractor to correct conditions unsafe for the general public; for failure to carry out provisions of the contract; for failure to carry out orders; for conditions considered unsuitable for the prosecution of the work; such as hazardous materials, extremes of wind, temperatures, or precipitation, either existing or forecasted with reasonable certainty to occur and which could be harmful to the scheduled operation; in order to comply with directives of the New Hampshire Department of Environmental Services, Division of Air Resources implementing the emergency episode procedure; or for any other condition or reason deemed to be in the public interest. For suspensions due to these causes, refer to 103.02(C), Suspensions of Work.

104.02 Plans and Working Drawings.

The approved plans on file in the office of the Department will show the location, detail and dimensions of the work.

These plans shall be supplemented by the Contractor with such additional working and detail drawings as may be found necessary to control adequately the work and its prosecution. The Contractor's drawings shall be furnished well in advance of the work to allow the Engineer time to review the drawings and will be prepared by a Professional Engineer if so noted in the contract or on the plans. When requested, the Contractor shall furnish his basic calculations.

Working drawings for steel structures shall consist of shop detail, erection and other working plans showing dimensions, sizes of material, details and other information necessary for the complete fabrication and erection of the metal work. Working drawings for concrete structures shall consist of such detailed plans as may reasonably be required for the successful prosecution of the work, and which are not included in the plans furnished by the Engineer. These may include plans for falsework, bracing, centering and form work; masonry layout diagrams; and diagrams for bent reinforcement. Manufacturer's engineering data for prefabricated material, including that for falsework and forms shall be furnished with each set of drawings.

The Contractor shall submit to the Engineer for approval 3 sets of any required preliminary detailed working drawings. Prior to the approval of the drawings, any work done or materials ordered for the structures involved shall be at the Contractor's risk. One set of the drawings will be returned to the Contractor approved or marked with corrections to be made. After approval

has been given, the Contractor shall supply the Engineer with 5 sets of the revised detailed working drawings.

The Contractor may propose detours not shown on the plans. Should he desire written approval of major detours, he shall submit plans in triplicate which shall show the proposed location, layout and signing.

The contract price will include the cost of furnishing all working drawings.

The Engineer's approval of the Contractor's working drawings will not relieve the Contractor from responsibility for errors in dimensions or for incorrect fabrication and erection processes, or from responsibility to complete the contract work.

104.03 Conformity with Plans and Specifications.

All work performed and all materials furnished shall be in reasonably close conformity with the lines, grades, cross sections, dimensions and material requirements shown on the plans or indicated in the specifications. If tolerances are specified, deviations beyond the specified limits will be unacceptable. When tolerance limits are not specified, and only single dimensions are indicated, such dimensions are to be regarded as nominal dimensions.

In the event the Engineer finds that the materials or the finished product in which the materials are used are not within reasonably close conformity with the plans and specifications but that reasonably acceptable work has been produced, he shall then make a determination if the work shall be accepted and remain in place. In this event, the Engineer will document the basis of acceptance by contract modification which will provide for an appropriate adjustment in the contract price for such work or materials as he deems necessary to conform to his determination based on engineering judgement.

In the event the Engineer finds that the work performed or that the materials or the finished product in which the materials are used are not in reasonably close conformity with the plans and specifications and have resulted in and inferior or unsatisfactory product, the work or materials shall be removed and replaced or otherwise corrected by and at the expense of the Contractor.

104.04 Coordination of Specifications.

The specifications, supplemental specifications, plans, special provisions and other special requirements and documents are essential parts of the contract and a requirement occurring in one is as binding as though occurring in all. They are intended to be complementary and to describe and provide for a complete work. In case of discrepancy, calculated dimensions, unless obviously incorrect, will govern over scaled dimensions and the parts of the contract will prevail in the following descending order:

Special Contract Requirements *
Special Provisions
Plans

Supplemental Specifications
Standard Specifications

* Includes Prosecution of Work, Traffic
Control Plan and Special Attentions.

The Contractor shall take no advantage of any apparent error or omission in the plans or specifications. In the event the Contractor discovers such an error or omission, he shall immediately notify the Engineer in accordance to Section 103.02. The Engineer will then make such corrections and interpretations as may be deemed necessary for fulfilling the intent of the plans and specifications. Where said correction of errors or omissions, except as provided below, adds to the amount of work to be done by the Contractor, compensation for such additional work shall be as determined in Section 107.08
The fact that specific mention of a fixture or of any part of the work is omitted in the specifications, whether intentionally or otherwise, when the same is clearly shown or indicated on the plans, or is usually and customarily required to complete fully such work as specified, will not entitle the Contractor to consideration in the matter of any claim for extra compensation, but said fixtures or work or both, shall be installed or done the same as if called for both by the plans and by the specifications.

All work indicated on the plans and not mentioned in the specifications or vice versa, and all work and materials usual and necessary to make the work complete in all its parts, whether or not they are indicated on the plans or mentioned in the specifications, shall be furnished and executed the same as if they were called for by both the plans and specifications.

104.05 Cooperation by Contractor.

The Contractor will be supplied with a minimum of two sets of the contract, including plans and special provisions, one complete set of which the Contractor shall keep available on the work site at all times.

The Contractor shall give the work the constant attention necessary to facilitate the progress thereof, and shall cooperate with the Engineer, his inspectors and other Contractors in every way possible.

Except as permitted, the Contractor shall have on the project site, while the Work is being performed, a competent English-speaking Superintendent capable of reading and thoroughly experienced in the type of work being performed. The Superintendent shall have full authority to receive and execute orders or directions of the Engineer without delay and to promptly supply such materials, equipment, tools, labor and incidentals as may be required. Such superintendence shall be furnished irrespective of the amount of work sublet. The Superintendent shall be an owner of, or employee of the Contractor; and shall not be an owner, employee or have any affiliation with any firm which is acting as a subcontractor on the project.

The Contractor shall promptly supply, irrespective of the amount of work sublet, the necessary Materials, equipment, tools, labor, and incidental items to complete the Contract.

Should the Contractor or any of his duly authorized representatives fail to cooperate to the extent that the integrity of the work is compromised, or the safe prosecution of the work is jeopardized, the Engineer may immediately suspend all work.

Any unsafe conditions will be corrected by the Contractor and the uncooperative person or persons shall be removed from the project before resumption of the work. The inability to rectify the situation may result in the termination of the contract in accordance with the provisions of 107.11.

The Contractor shall not sell and shall neither permit nor suffer the introduction or use of intoxicating liquors or other materials upon or about the work embraced in this contract.

104.06 Cooperation with Utilities.

The Contractor will notify all utility companies, pipe line owners or other parties affected and have all necessary adjustments of the public or private utility fixtures, pipe lines and other appurtenances within or adjacent to the limits of construction made as soon as practicable.

Water lines, gas lines, sewer lines, wire lines, service connections, water and gas meter boxes, water and gas valve boxes, light standards, cableways, signals and all other utility appurtenances within the limits of the proposed construction which are to be relocated or adjusted are to be moved by the owners at their expense, except as otherwise provided for in the special provisions or as noted on the plans.

Attention is directed to the possible existence of underground facilities not known to the Department or in a location different from that which is shown on the plans or in the special provisions.

New Hampshire State Law, RSA 374:48-56, requires that anyone who excavates on public property or utility easement must notify the Damage Preventions System referred to in the RSA at least 72 hours prior to starting work.

The Contractor shall be responsible to notify the DIG- SAFE Call Center (Tel. No. 1-888-DIG-SAFE) at least 72 hours in advance of starting any excavation or erecting permanent construction signing. Saturdays, Sundays and legal holidays are not to be included in the computation of the required 72 hour notice.

The Contractor shall provide the Engineer's representative on the project with the date, time, numbers assigned and the name of the person answering the call at the DIG-SAFE Center which will be recorded on the project daily report.

Notice of intent to excavate cannot be made more than 30 calendar days prior to actual work. All utility facilities within the proposed work, including advance construction sign locations, should be identified and marked prior to construction. Suspension of the work for more than 30 calendar

days at any time will require re-notification of the DIG-SAFE Center to ensure validity of markings and to protect interim utility construction.

The Contractor shall provide the Engineer's representative with sufficient lead time to allow the layout of advance permanent construction signs and excavation areas prior to the start of the 72 hour period required by DIG- SAFE.

The Contractor shall additionally notify municipal and privately owned utilities to identify, locate and mark their facilities separately from those to be located through the DIG-SAFE system.

Once located and marked, the Contractor shall maintain all utility markings and provide access to any and all installations to permit repairs and maintenance of service as needed.

The Contractor shall cooperate with utility owners in the removal and rearrangement of underground or overhead utility facilities to minimize interruption to utility services and duplication of work by the utility owners.

Facilities or appurtenances that are to remain in place during construction shall be accounted for and protected by the Contractor’s work procedures. The fact that an underground facility is not shown on the plans shall not relieve the Contractor of its responsibility under this Section. At points where the Contractor’s operations are adjacent to properties of railway, telecommunications, gas, and electric power companies, and other utilities, or are adjacent to other property where damage might result in considerable expense, loss, or inconvenience, Work shall not commence until all arrangements necessary for the protection thereof have been made.

In the event utility services are interrupted as a result of damage within the Limits of Construction, the Contractor shall notify the appropriate utility authorities and cooperate with them until service has been restored. Work shall not commence around fire hydrants until the Manchester Fire Department has been adequately notified

Repairs to damaged utilities caused by carelessness or omissions on the part of the Contractor shall be corrected at the Contractor’s expense. The damaged facilities shall be restored to a condition similar or equal to that existing before the damage occurred.

It is understood and agreed that the Contractor has considered in the bid all of the permanent and temporary utility facilities in their present or relocated positions as shown on the plans and as evident on the site, and that no additional compensation will be allowed for any delays, inconvenience or damage sustained due to any interference from such utility facilities or the operation of moving them. Full compensation for furnishing all labor, materials, tools, equipment, and incidentals, and for doing all the work involved in protecting or repairing property as specified above shall be considered as included in the prices paid for the various Contract items of work and no compensation beyond the amounts provided for in the Contract will be allowed therefore.

Should the Contractor desire to have any rearrangement made of any utility facility, or other improvement, for the Contractor's convenience in order to facilitate construction operations, which rearrangement is in addition to or different from, the rearrangements indicated in the Contract, the Contractor shall make whatever arrangements are necessary with the owners of such utility or other non-highway facility for such rearrangement and bear all related expenses.

If utility facilities or appurtenances are found that are not noted in the Contract, the Engineer will determine whether adjustment or relocation of the utility is necessary to accommodate construction and proceed to make necessary arrangements with the utility owner or the Contractor if the work necessary is not otherwise specified. If the Contractor believes that it is entitled to compensation or a time extension based on the Engineer's determination or arrangements, then the Contractor shall proceed in accordance with Section 103.02, including providing notice as required by 103.02.(G)

104.07 Cooperation Between Contractors.

The Department reserves the right at any time to Contract for and perform other or additional work on or near the Work covered by the Contract.

When separate Contracts are let within the limits of any one project or on adjacent projects, each Contractor shall conduct his work so as not to interfere with or hinder the progress or completion of the work being performed by other Contractors. Contractors working on the same project or adjacent projects shall cooperate with each other in a manner to serve the best interest of the City. In case of any unavoidable interference, the Engineer will determine priorities.

Each Contractor involved shall assume all liability, financial and otherwise, in connection with his contract and shall protect and save harmless the City from any and all damages or claims that may arise because of inconvenience, delay, or loss experienced by him because of the presence and operations of other Contractors working within the limits of the same project.

The Contractor shall arrange his work and shall place and dispose of the materials being used so as not to interfere with the operations of the other Contractors within the limits of the same project or on adjacent projects. He shall join his work with that of the others in an acceptable manner and shall perform it in proper sequence to that of the others.

104.08 Construction Stakes, Lines and Grades.

The Contractor shall furnish stakes and do all survey and engineering required for establishing grades, lines, levels, dimensions and reference points for all trades. All lines and grade work not presently established at the site shall also be laid out by the Contractor in accordance with the plans and specifications, as directed by the Engineer.

The Contractor will be held responsible for the preservation of all stakes and marks, and if any of the construction stakes or marks have been carelessly or willfully destroyed or disturbed by the Contractor, they shall promptly be replaced by him at the Contractor's sole expense, as directed by the Engineer.

The Contractor shall compare all grades, lines, levels and dimensions as shown on the plans with actual site conditions and shall promptly report to the Engineer, before commencing work, any inconsistencies he may discover.

No separate payment will be made for the work described in this section.

104.09 Authority and Duties of Representatives of the Engineer.

The Engineer may appoint such assistants and representatives as he desires and they shall be granted full access to the work or to mills and plants in which work is being done for use under the contract. They have authority to give directions pertaining to the work or to the safety and convenience of the public, to approve or reject materials, to suspend any work that is being improperly or unsafely performed, to make measurements of quantities, to keep records of costs and otherwise represent the Engineer. The Contractor may, however, appeal their decision to the Engineer himself, but any work done pending settlement is at the Contractor's own risk.

Except as permitted and instructed by the Engineer, the assistants and representatives are not authorized to revoke, alter, enlarge, relax or release any requirements of the contract, nor to issue instructions contrary to the contract. They are not authorized to act as superintendents or foremen for the Contractor or to interfere with the management of the work by the Contractor. Any advice which the assistants or representatives of the Engineer may give the Contractor shall not be construed as binding the Engineer or the Department in any way, nor releasing the Contractor from the fulfillment of the terms of the contract.

All transactions between the Contractor and the representatives of the Engineer which are liable to protest or where payments are involved shall be made in writing.

104.10 Inspection of Work.

All materials and each part or detail of the work shall be subject to inspection by the Engineer. The Engineer shall be allowed access to all parts of the work and shall be furnished with such information and assistance by the Contractor as is required to make a complete and detailed inspection.

The Contractor, at any time before acceptance of the work, shall remove or uncover such portions of the finished work as may be directed by the Engineer. After examination, the Contractor shall restore such portions of the work to the standard required by the specifications. Should the work thus exposed or examined prove acceptable, the uncovering or removing and the replacing of the covering or making good of the parts removed will be paid for as extra work. Should the work so exposed or examined prove unacceptable, the uncovering or removing and the replacing of the covering or making good of the parts removed will be at the Contractor's expense.

Any work done or materials used without supervision or inspection by an authorized Department representative may be ordered removed and replaced at the Contractor's expense unless the

Department representative failed to inspect after having been given reasonable notice that the work was to be performed.

When any unit of government or political subdivision, utility or any corporation is to accept or pay a portion of the cost of the work covered by the contract or has an interest in the work for other reasons, its respective representatives shall have the right to inspect the work. Such inspection shall in no sense make any unit of government or political subdivision, utility or any corporation a party to the Contract and shall in no way interfere with the rights of either party hereunder.

The inspection of the work shall not constitute acceptance of same and shall not relieve the Contractor of any of his obligations to fulfill his contract.

104.11 Removal of Unacceptable and Unauthorized Work.

All work which does not conform to the requirements of the Contract will be considered unacceptable unless otherwise determined acceptable under the provisions in 104.03.

Unacceptable work, whether the result of poor workmanship, use of defective materials, damage through carelessness or any other cause, found to exist prior to the final acceptance of the work, shall be removed immediately and replaced in an acceptable manner by and at the Contractor's expense, notwithstanding that such work and materials have been previously overlooked by the Engineer and accepted and estimated for payment.

Work done contrary to the instructions of the Engineer, work done beyond the lines shown on the plans or as given, except as herein specified, or any extra work done without authority will be considered as unauthorized and will not be paid for under the provisions of the contract. Work so done may be ordered removed or replaced at the Contractor's expense.

Upon failure on the part of the Contractor to comply forthwith with any order made under the provisions of this subsection, the Engineer will have authority to cause unacceptable work to be remedied or removed and replaced and unauthorized work to be removed and to deduct the cost from any moneys due or to become due the Contractor.

104.12 Load and Speed Restrictions.

Gross loads shall not exceed the legal gross loads on any highway nor exceed the gross load limits posted on any bridge.

Where damage would be caused, the Contractor shall not operate equipment of such type, weight or so loaded as to cause damage to structures, to the roadway or to any other work. Hauling of materials over a base course or surface course under construction shall be limited as directed. The Contractor shall be responsible for all damage done by his equipment. A special permit will not relieve the Contractor of liability for damage which may result from the moving of material or equipment.

It is specifically called to the Contractor's attention that streets not on the State system are the property of the City and they are maintained and regulated by the authorities of the City. Since many of these streets are not constructed for the continuous passage of heavy construction loads and equipment, the Contractor shall, prior to subjecting such streets to such loads, secure the consent of the proper municipal authorities. During the use of these streets, he shall maintain them in a condition satisfactory to the Engineer and safer for the travelling public. After hauling operations are completed, he shall repair, to the satisfaction of the Engineer, all damage incurred by his use of these streets.

104.13 Maintenance During Construction.

The Contractor shall maintain the work during construction and until the project is accepted. This maintenance shall constitute continuous and effective work prosecuted day by day, with adequate equipment and forces, to the end that the work and the work area are kept in satisfactory condition at all times.

The Contractor shall take every reasonable precaution against spillage of construction materials on existing highways, streets and bridges. The Contractor's attention is called to "Spillage of Material" under 106.01. If spillage does occur, the Contractor shall remove such spillage immediately after its occurrence.

Maintenance shall generally include but not be limited to cleaning and maintenance of erosion control, drainage and sewer structures and limiting the accumulation of debris on the work site.

The Contractor shall provide adequate measures to prevent dust from constituting a nuisance to abutters by wetting disturbed earth surfaces or by use of calcium chloride or other approved palliatives.

All cost of maintenance work during construction and before the project is accepted shall be included in the unit prices bid on the various pay items and the Contractor will not be paid an additional amount for such work.

104.14 Failure to Maintain the Work.

If the Contractor, at any time, fails to comply with the provisions of 104.13, the Engineer may direct the Contractor to comply with the required maintenance provisions. If the Contractor fails to remedy unsatisfactory maintenance within the time specified in any order, the Engineer may immediately proceed to maintain the project, and the entire cost of this maintenance will be deducted from money due or to become due the Contractor on his contract.

104.15 Acceptance.

Upon due notice from the Contractor of presumptive completion of the entire project, the Engineer will make an inspection. If all construction provided for and contemplated by the contract is found completed to his satisfaction, this inspection shall constitute the final inspection and the Engineer will make the final acceptance and notify the Contractor and his surety in

writing of this acceptance as of the date of the final inspection. Such final acceptance shall be conditional upon the subsequent remedying of defects which may manifest within a period of twelve (12) months from date of acceptance.

If the inspection discloses any unsatisfactory work the Engineer will give the Contractor the necessary instructions for correction of such work and the Contractor shall immediately comply with and execute such instructions. Upon correction of the work, another inspection will be made which shall constitute the final inspection provided the work has been satisfactorily completed. In such event, the Engineer will make final acceptance and notify the Contractor and his surety in writing of his acceptance as of the date of final inspection. Such final acceptance shall also be conditional upon the subsequent remedying of defects which may manifest within a period of twelve (12) months from date of acceptance.

Twelve months after the date of the certification of acceptance or as soon thereafter as practicable, the Engineer shall make a re-inspection of the work or cause the same to be made. If said work shall be found satisfactory and the work not to have deteriorated through defects of workmanship or material, then the Engineer shall certify the release of the guarantee. Such certification shall be a pre-requisite to the release of the surety on the Contract Bond. If, however, the re-inspection discloses defects due to the non-fulfillment of this contract or non-compliance with its requirements, the Engineer shall so notify the Contractor in writing. There-upon, the Contractor shall, at his own expense, make good all defects of workmanship and materials which shall be a pre- requisite to the release of the guarantee and to the release of the surety on the Contract Bond. If, however, the Contractor shall, after due notice, refuse or neglect to make good the defects to the satisfaction of the Engineer, the Director may proceed in the manner prescribed in 107.10.

104.16 Claims for Adjustment.

If the Contractor deems that additional compensation is due him for work or material not clearly specified in the contract, or not ordered as extra work, the Contractor shall notify the Engineer, in writing as outlined in Section 103.02(G), of his intention to make claim for such additional compensation before he begins the work on which he bases the claim.

If such notification is not given and the Engineer is not afforded proper facilities by the Contractor for keeping strict account of actual cost as required, then the Contractor hereby agrees to waive any claim for such additional compensation. Such notice by the Contractor and the fact the Engineer has kept account of the cost as aforesaid, shall not, in any way, be construed as proving or substantiating the validity of the claim. If the claim, after consideration by the Engineer, is found to be just, it will be paid as extra work.. Nothing in this section shall be construed as establishing any claim contrary to the terms of 104.02.

A. Claim Submittals

Claim submittals shall be in sufficient detail to enable the Engineer to determine the basis for entitlement and the compensation and time extension due, if any. At a minimum, the Contractor's claim shall include the following pertinent data arranged in a logical sequence:

1. Detailed factual statement of the claim providing all dates, locations, and work affected by the claim.
2. The date or dates that conditions resulting in the claim became evident and events resulting in the claim occurred.
3. Department and Contractor employees knowledgeable of the facts that gave rise to such claim.
4. The specific provisions of the Contract that support the claim, and a statement as to why the provisions support the claim.
5. Schedules and updates prepared in accordance with 107.03, Schedule, if delays or a request for a time extension are relevant to the disputed issue;
6. The identification of any relevant documents, and the substance of any significant oral communications relating to the claim.
7. A statement as to whether the compensation or extension of time being claimed is based on the provisions of the Contract or an alleged breach of Contract.
8. If extension of time is also sought, the specific amount of time which it is sought, and the basis for such claim as determined by an analysis of the construction schedules noted in item 5 above.
9. The amount of compensation sought with supporting documentation of the amount in accordance with 108.04 of that amount.

The Contractor's failure to provide this information will constitute a waiver of the Contractor's entitlement to compensation or a time extension for the claim.

B. Required Certification of Claims

In addition to the information required in 104.16.A, the Contractor's Claim must be accompanied by the following signed certification. The Contractor's failure to provide this certification will constitute a waiver of the Contractor's entitlement to compensation or a time extension for the claim:

CERTIFICATE OF CLAIM

The undersigned is duly authorized to certify the enclosed documentation on behalf of (the Contractor).

(The Contractor) *certifies that the documentation is submitted in good faith, that the information provided is accurate and complete to the best of* (the Contractor's) *knowledge and belief, and that the compensation and time extension requested accurately reflects the Contract Revision for which* (the Contractor) *believes the department is responsible.*

_____
Name and Title

_____
Company

_____
Date Signature

Notarized:_____

C. Review of Claims

Upon request of the Engineer's review of the claim the Contractor shall provide reasonable access to or copies of the Contractor' s documents including, but not limited to, payroll registers, material invoices, purchase orders, equipment records, documents related to preparation of the bid and any other worksheets used to prepare the claim, establishing the cost components for items of the claim including, labor, benefits and insurance, materials, equipment, Subcontractors, and all documents that establish the time periods, individuals involved, the hours and the rates for the individuals. The Contractor's failure to provide access or copies as requested may constitute a waiver of the Contractor's entitlement to compensation or a time extension for the claim:

104.17 Resolution of Claims and Disputes

A. Upon review of the claim, if the Engineer concludes that the Contractor has established entitlement to compensation or a time extension, the Engineer will determine compensation in accordance with 108.04, and time extensions in accordance with 107.08.

B. Within 30 calendar days date of the Engineer's decision, if the Contractor does not agree with the Engineer's decision, the Contractor may appeal the matter to the Director of Public Works. Nothing in this subsection shall be construed as establishing any claim contrary to the terms of 103.02. Compensation shall be in accordance with 108.04 with time extensions as provided for in 107.08 will be made to the Contract if the claim is found by the Director of Public Works to have merit.

SECTION 105 -- CONTROL OF MATERIAL

105.01 Source of Supply and Quality Requirements.

All materials used shall meet all quality requirements of the contract. In order to expedite the inspection and testing of materials, the Contractor shall notify the Engineer of the proposed sources of materials prior to delivery. At the option of the Engineer, material may be approved at the source of supply before delivery is started. If it is found after trial that sources of supply for previously approved materials do not produce specified products, the Contractor shall furnish materials from other sources. No material which, after approval, has in any way become unfit for use shall be used in the work. All materials shall be new unless otherwise specifically prescribed in the contract documents.

Nothing in the contract shall be construed as vesting in the Contractor any right of property in the materials used after they have been attached or affixed to the work or the soil but all such materials shall, upon being so attached or affixed, become the property of the City.

105.02 Samples, Tests, Cited Specifications.

All materials and products proposed to be used in the construction shall be inspected, sampled, tested and approved by the Engineer or accepted by a Certificate of Compliance from the Contractor as specified in 105.03. The testing laboratory will be selected by the Engineer. Materials found to be unacceptable and unauthorized will not be paid for and, if directed by the Engineer, shall be removed at the Contractor's expense.

Unless otherwise specified, all testing of materials shall be paid for by the Contractor who will be reimbursed based on paid invoices. When work already in place is disturbed for the purpose of testing and the tests show materials or workmanship to be defective, all costs for testing and repair of the work shall be borne by the Contractor.

All samples and all testing and laboratory methods shall be in accordance with the methods prescribed by the availability pertinent publications of the AASHTO, ASTM or FSS, unless other standard methods are designated, except that the Engineer reserves the right to make use of any information or method of testing to determine the quality of material. With respect to all the above specifications, whenever specifications and serial numbers are stipulated, unless specified dates are indicated, the references shall be construed to be the standard, interim or tentative specifications and serial numbers of the pertinent body as amended to date of Invitation for Bids. Samples for testing purposes shall be furnished by the Contractor at no cost to the Department. If there is a difference in the test methods the order of precedence for the test procedures used will be as follows:

1. AASHTO
2. ASTM
3. FSS

Samples for testing purposes shall be furnished by the Contractor at no cost to the Department. The sampling and sample splitting of materials tested by the Department will be performed or observed by a qualified representative of the Department.

Testing will only be done when ordered by the Engineer.

The Department may retest and reject unacceptable materials previously tested and conditionally accepted at the source of supply. Materials to be used are subject to inspection, testing, or rejection prior to Acceptance. Copies of any tests will be furnished to the Contractor's representative upon request.

Random samples of materials or completed work may be taken as checks on the control sampling and testing to determine reasonable compliance with the Specifications. Such sampling will be at any time prior to Acceptance of the Work, either while any phase of the Work is in progress or after it has been completed. The extent and locations of such random sampling will be as designated by the Engineer.

In all AASHTO or ASTM specifications, the sections entitled "Inspection" shall be amended to provide that test of materials may be made in any Laboratory as defined under Terms and Definitions.

All sieves shall conform to the requirements of the AASHTO M 92 and shall be square hole wire cloth sieves.

When sampling and testing of seeds is required, sampling and testing methods shall be as prescribed in the Rules and Regulations established in accordance with RSA 433.

105.03 Certificates of Compliance.

The Contractor shall provide a Certificate of Compliance for all materials that are to be permanently incorporated into the Work for which there is no prescribed schedule of acceptance testing by the Engineer. If more than one product is used for the same purpose, a Certificate of Compliance shall be submitted for each product. Certificates of Compliance shall be submitted on the form shown in Appendix B. Certificates will also be required for temporary, safety-related items, such as guardrail, impact attenuators, traffic control devices, and pavement markings. No payment will be made for any item until the required certificates have been received. The certificate shall show the following:

a) Date of certification.
b) Description of material supplied.
c) Product trade name
d) Name of the Contractor to whom the material is supplied.
e) Project name and numbers to which the material is consigned.
f) Contract item number and contract item name.
g) Name of Manufacturer and/or Supplier.

h) The material meets the requirements of the pertinent specification required by the contract.
i) That records will be maintained for the defined 3 year period stated below.
j) Signature of a person having legal authority to bind the originator of the certificate.

Certificates of compliance submitted from either the manufacturer, the supplier or the Contractor, in the format as prescribed (see sample that follows), will be accepted. All documentation for said certificates must be maintained by the originator of the certificate for a period of not less than three years from the date of acceptance of the project.

Certificates of compliance covering more than one type of material or item will be acceptable if a listing is made of the item number, name of item, manufacturer and/or supplier for each material covered.

Materials listed in the above certificates may be subject to random sampling and testing by the Engineer. Certified materials which fail to meet the specification requirement will not be accepted.

The following is a list of materials which require certificates of compliance. This list is not all-inclusive. Certain special materials not commonly used on all projects will also require certificates.

Bearing Pads
Bearing Assemblies
Bounds (Concrete and Granite)
Bridge Elastomeric Expansion Devices
Bridge Railing and Hardware
Bituminous Materials
Castings: Grates, Frames and Covers
Concrete: Curing, Waterproofing, Sealing Agents and Admixtures
Conduit and Pullboxes
Concrete Blocks, Precast Sections, Clay Brick for Sewer/Drain
Culverts, Underdrains, Structural Plate Pipe and Structural Plate Arches
Delineators
Drainage/Sewer Structures
Fence Materials: Posts, Fabric and Hardware
Geotextiles
Guardrail: Beam Rail, Cable, Posts and Fittings
Impact Attenuators
Joint Materials: Cork, Sealants, etc.
Light Pole Bases
Liquid Asphalt Materials
Luminaires and Supports
Matting for Erosion Control
Membrane Waterproofing
Paint

Pavement Markings: Tapes, Thermoplastics, Markers and Paint
Permanent and Temporary Lighting Systems
Piles: Steel, Bearing, Timber, Treated Timber and Permanent Steel Sheeting
Pipe: Water, Sewer, Drainage and Accessories
Shear Connectors
Sign Materials: Posts, Trusses, Fasteners, Sheeting and Panels
Steel: Reinforcing Bars and Mesh, Minor Structural and Structural Steel
Traffic Signals and Equipment
Waterstops: Rubber, Polyvinyl Chloride, Copper
Witness Markers

Supplementing the above certificates, upon request, the Engineer shall be furnished with a copy of the manufacturer's certificate of materials showing the physical properties, chemical composition, methods of testing and other relevant data.

105.04 Plant Inspection.

The Engineer may undertake the inspection of materials at the source. Manufacturing plants may be inspected periodically for compliance with specified manufacturing methods and materials samples will be obtained for laboratory testing for compliance with materials quality requirements. This may be the basis for acceptance of manufactured lots as to quality.

In the event plant inspection is undertaken, the following conditions shall be met:

a) The Engineer shall have cooperation and assistance of the Contractor and the producer of the materials.

b) The Engineer shall have full entry at all times to such parts of the plant as may concern the manufacture or production of the materials being furnished.

c) If required, the Contractor shall arrange for an approved building for the use of the Engineer; such building to be located conveniently near the plant, independent of any building being used by the material producer, in which to house and use the equipment necessary to carry on the required tests.

d) Adequate safety measures shall be provided and maintained.

105.05 Acceptance of Manufactured Materials.

It is understood that the Department reserves the right to retest all materials that have been tested and approved at the source of supply prior to incorporation into the work and to reject all materials which, when retested, do not meet the requirements of these specifications or those established for the specific project.

105.06 Storage and Handling of Materials.

Materials shall be so stored, handled, and transported as to assure the preservation of their quality and fitness for the Work. Stored materials, even though approved before storage, may again be inspected prior to their use in the work. Stored materials shall be located so as to facilitate their prompt inspection. Approved portions of the project area may be used for storage purposes and for the placing of the Contractor's plant and equipment but any additional space required therefore must be provided by the Contractor at his expense. Private property shall not be used for storage purposes without written permission of the owner or lessee and if requested, copies of such written permission shall be furnished to the Engineer. All storage sites shall be restored to their original condition by the Contractor at his expense.

105.07 Unacceptable Materials.

All materials not conforming to the requirements of the specifications shall be considered as unacceptable and all such materials will be rejected and shall be removed immediately from the project unless otherwise instructed by the Engineer. Rejected material shall not be used until the defects have been corrected and the material is approved by the Engineer. Should the Contractor fail to remove defective materials within the time indicated in writing, the Engineer shall have authority to cause the materials to be removed at the Contractor's expense.

105.08 Alternates, Substitutions and Contractor's Options.

Whenever the Plans and Specifications, any item of equipment or material is designated by reference to a particular brand, manufacturer or trade name, it is understood that an approved equal product, acceptable to the Engineer may be substituted by the Bidder or Contractor. In the event of acceptance of any alternate or substitution, it shall be the responsibility of the Contractor to coordinate such alternate or substitute items with all other items to be furnished to assure the proper fitting together of all items. Any additional cost incident to the coordination and/or fitting together of alternate or substitute items shall be borne by the Contractor at no extra cost to the Owner. Similar responsibility applies to items which are left to the Contractor's option.

105.09 Department-Furnished Material.

Material furnished by the Department will be delivered or made available to the Contractor at the locations specified in the Contract.
The cost of handling and placing Department-furnished materials after delivery to the Contractor shall be included in the Item Bid Price for the item in which they are used. The Contractor is responsible for materials delivered. Deductions will be made from any money due the Contractor for any shortages, deficiencies, and damage that may occur to the material after delivery. Demurrage charges, resulting from the Contractor’s failure to accept the material at the designated time and location of delivery, will also be deducted from money due the Contractor.

105.10 Disposal of Surplus Waste Materials.

When practicable and whenever directed, surplus and waste material shall be disposed of by flattening slopes or for other grading with the project. When specified on the plans or ordered, surplus material shall be hauled off the project. Such material shall be placed in accordance with the appropriate specification. In case it is impossible to dispose of all the surplus and waste material in the manner described above and when the contract does not contain the item of embankment-in-place, the remainder shall be disposed of as directed or as approved. It shall be the Contractor's responsibility to secure disposal areas for surplus and waste materials. Disposal Agreements, as provided by the Department, for such areas must be submitted to the Engineer for approval (See Appendix B).

SECTION 106 -- LEGAL RELATIONS & RESPONSIBILITY TO PUBLIC

106.01 Laws to be Observed.

The Contractor shall keep fully informed with, and observe and comply with all Federal and State laws, all local laws, ordinances and regulations and all orders and decrees of bodies or tribunals having any jurisdiction or authority, which in any manner affect those engaged or employed on the Project or which in any way affect the conduct of the Work on the Project. The Contractor shall protect and indemnify the City and its representatives against any claim or liability arising from or based on the violation of any such law, ordinance, regulation, order or decree, whether by the Contractor, the Subcontractor(s) of any tier, suppliers of materials or services, or others engaged by the Contractor, or the employees of any of them.

If any discrepancy or inconsistency is discovered between the Contract documents and any law, ordinance, regulation, order or decree, the Contractor shall immediately report the same to the Engineer in writing.

Each and every provision of law and clause required by law to be inserted in the Contract shall be deemed to be inserted and the Contract shall be read and enforced as though it were included and if through mistake or otherwise, any such provision is not inserted or is not correctly inserted, then upon the application of either party, the Contract shall forthwith be physically amended to make such insertion.

The Contractor shall take out and maintain during the life of the contract Workmen's Compensation Insurance for all of his employees employed at the site of the project and in case any work is sublet the Contractor shall require the Subcontractor(s), similarly, to provide Workman's Compensation Insurance for all of the latter's employees unless such employees are covered by the protection afforded by the Contractor. In case of any class of employees engaged in hazardous work under this Contract at the site of the Project is not protected under the Workman's Compensation Statute, the Contractor shall provide and shall cause each Subcontractor to provide adequate insurance for the protection of his employees not otherwise protected.

The Contractor shall be and remain an independent contractor with respect to all services performed and shall accept full and exclusive liability for the payment of any and all contributions or taxes for social security, unemployment insurance or old-age retirement benefits, annuities now or hereafter imposed, or other remuneration paid to persons employed by the Contractor on work performed under the terms of the contract and shall obey all lawful rules and regulations and meet all lawful requirements which are now or hereafter may be issued or promulgated under said respective laws by any duly authorized State or Federal Officials. The Contractor shall also indemnify and save harmless the City of Manchester from such contributions or taxes or liability therefore.

Except for work done under items in the contract, work prescribed herein will not be paid for separately but will be considered subsidiary.

The Contractor's attention is further called to RSA 281-A: 18 which reads in part:

> **281-A:18 Contractor's Liability for Subcontractors.** A Contractor who subcontracts all or any part of a Contract shall bear the liability of the Subcontractor of that contract for the payment of compensation under this chapter to the employees of the Subcontractor, unless the Subcontractor has secured the payment of compensation as provided for in this chapter. Any Contractor who shall become liable for compensation under this section may recover the amount of the compensation paid and necessary expenses from the Subcontractor. ..."

The Contractor's attention is further called to RSA 266:72 which reads in part:

266:72 Spillage of Material.

I. No vehicle shall be driven or moved on any way unless such vehicle is so constructed or loaded as to prevent any of its load from dropping, sifting, leaking or otherwise escaping therefrom, except that sand may be dropped for the purpose of securing traction, or water or other substance may be sprinkled on a way in cleaning or maintaining such way.

II. No person shall operate on any way any vehicle with any load unless said load and any covering thereon is securely fastened so as to prevent said covering or load from becoming loose, detached or in any manner a hazard to other users of the way. Without limiting the foregoing provision, no person shall drive on any way any open vehicle loaded with earth, sand, asphalt, stone, gravel or other particulate substance unless said vehicle is equipped with and said load is covered and secured by a close-fitting tarpaulin or similar covering which prevents the escape of any substance from said load onto the way.

III. Any person who violates the provision of this section shall be guilty of a violation if a natural person, or guilty of a misdemeanor if any other person. Any person shall be liable to the state or town for any damage done to the way by spillage.

IV. The provisions of paragraphs I, II, II-a, and III of this section shall not apply to a local farmer transporting his own farm products or materials incidental to his farming operations where such transporting requires incidental use of a way provided that such farmer shall not thereby be relieved of his duty to exercise reasonable care in . carrying on such operations.

V. The provisions of paragraph II and II-a shall not apply to: ,

(a) The operation of highway building equipment as defined in RSA 259:42 .and motor vehicles used in the construction of highways provided that such equipment or motor vehicle is used within a highway construction zone as prescribed by the Commissioner of Transportation provided that the driver of any such vehicle shall not thereby be relieved of his duty to exercise reasonable care;
(b) The operation of municipal and state highway maintenance equipment;

(c) The driving of any vehicle on a way at speeds of less than 30 miles per hour."

Projects in the State are within watersheds under the jurisdiction of the New Hampshire Department of Environmental Services, Water Division.

Applicable regulations of said Division require the Contractor to take extraordinary and sufficient precautions to prevent the runoff of fuels, oils, bitumens, calcium chloride or other polluting materials harmful to humans, fish or other life, into the water supplies and surface waters of the State.

Unless otherwise permitted by the New Hampshire Department of Environmental Services, Water Division, control measures must be adequate to assure that turbidity in the receiving water due to the runoff of silt and clay will not be increased to more than ten (10) nephelometric turbidity units (NTU) above naturally occurring conditions in Class B waters. Class A waters shall contain no turbidity, unless naturally occurring. Proper planning and scheduling of construction operations are major factors in controlling erosion. Proper planning and scheduling of construction operations are major factors in controlling erosion. Construction of drainage facilities and performance of other Work that will contribute to the control of erosion and sedimentation shall be carried out concurrently with earthwork operations or as soon thereafter as practicable. Where there is a high potential for erosion and subsequent water pollution, the duration of the exposure of the uncompleted construction to the elements shall be kept to a minimum. Fine material placed or exposed during the Work shall be so handled and treated as to minimize the possibility of its reaching any stream or water supply. Diversion channels, dikes, sediment traps, and any other effective measures may be used. Where applicable and unless otherwise permitted where an alternate procedure would be acceptable to the State and the Contractor, before water shall be allowed to run into any ditch or channel, the waterway shall be prepared with permanent erosion control measures so that the waterway will be safe against erosion. Prior to beginning the work, the Contractor shall submit a schedule of operations indicating the special precautions proposed to control erosion.

Special precautions shall be taken in the use of construction equipment to minimize erosion. Wheel tracks shall not be left where erosion might begin. Wherever crossing of live streams is necessary, temporary culverts or bridges shall be constructed to allow equipment to cross. Fording of streams shall not be permitted unless approved by the Engineer and appropriate permits have been obtained. Disturbance of lands and waters that are outside the limits of the construction as staked will be prohibited except as may be found necessary and ordered.

All waterways shall be cleared as soon as practicable of falsework, piling, debris or other obstructions placed during construction operations and not a part of the finished work.

Prior to suspension of construction operations for appreciable lengths of time, the Contractor shall shape the earthwork in a manner that will permit storm runoff with a minimum of erosion. Temporary erosion and sediment control measures such as berms, dikes, slope drains or sedimentation basins shall be provided and maintained until permanent drainage facilities and erosion control features have been completed and are operative.

The Contractor's attention is called to RSA 482-A:3 Excavating and Dredging Permit; Certain Exemptions which reads in part:

> **"482-A:3 Excavating and Dredging Permit; Certain Exemptions.**
> I. (a) No person shall excavate, remove, fill, dredge or construct any structures in or on any bank, flat, marsh, or swamp in and adjacent to any waters of the state without a permit from the department. The permit application together with a detailed plan and a map showing the exact location of the proposed project, along with 4 copies of the permit application, plan and map, shall be submitted to the town or city clerk, accompanied by a filing fee in the form of a check made out by the applicant to the state of New Hampshire.
>
> (b) The permit application fee for minor and major shoreline structure projects shall be $200 plus an impact fee, based on the area of dredge, fill, or dock surface area proposed, or a combination. The shoreline structure impact fee shall be $2 per square foot for permanent dock surface area; $1 per square foot for seasonal dock surface area; and $.20 per square foot for dredge or fill surface area or both. For projects involving only the repair, reconstruction, or reconfiguration of an existing docking structure, the application fee shall be $200....."

and RSA 485-A:17**Terrain Alteration** which reads in part:

> **"485-A:17 Terrain Alteration.** I. Any person proposing to dredge, excavate, place fill, mine, transport forest products or undertake construction in or on the border of the surface waters of the state, and any person proposing to significantly alter the characteristics of the terrain, in such a manner as to impede the natural runoff or create an unnatural runoff, shall be directly responsible to submit to the department detailed plans concerning such proposal and any additional relevant information requested by the department, at least 30 days prior to undertaking any such activity. ..."

In order to prevent the dissemination of harmful or destructive plants or insects, no person shall collect, transport, sell, distribute, propagate, transplant or release any living and viable portion of any plant or any insect species listed in Table 3800.1 of Part AGR 3802 of the New Hampshire Code of Administrative Rules (Statutory Authority RSA 430:55).

Complete information may be secured from the NH Department of Agriculture, Markets & Food Division of Plant Industry.

The Contractor shall also protect the atmosphere from particulate and gaseous pollutants in conformance with regulations promulgated by the New Hampshire Department of Environmental Services, Division of Air Resources.

The Contractor's attention is called to New Hampshire Code of Administrative Rules: Part Env-A 1000 Prevention, Abatement and Control of Open Source Air Pollution; which reads in part;

Env-A 1001.04 General Open Burning Requirements. Open burning in any part of the state shall be permissible when the burning:

(a) Is conducted in accordance with all local ordinances;

(b) Is authorized by an official having jurisdiction over open burning, whenever authorization is required;

(c) Does not create a nuisance; and

(d) Includes only materials burned in conformance with this part.

The Air Resources Division may order unauthorized burning to cease and may order authorized burning creating a nuisance to cease. The order may be issued directly to the Contractor or to the Contractor through the Engineer.

106.02 Permits, Licenses and Taxes.

The Contractor shall procure all permits and licenses, pay all charges, fees, and taxes, and give all notices necessary and incidental to the due and lawful prosecution of the Work. The costs for all charges, fees, and taxes shall be included in the unit prices bid for the various items of the Contract. Necessary permits from the proper authorities for the Work as shown on the Plans or indicated in the Proposal in coastal and inland waters and wetlands within the State have been or will be obtained by the Department as described in the Prosecution of Work. It will be the Contractor's responsibility to secure permits, variances, or modifications to the permits secured by the Department for additional work not shown on the Plans or work necessary for the Contractor's method of construction. Additional work shall not begin until permits, variances, or modifications have been obtained.

The attention of the Contractor is called to RSA 293A, Business Corporations, which, among other provisions, requires the payment of a fee for the record of organization and an annual renewal fee; to RSA 305-A, Registration of Foreign Partnerships, which, among other provisions, requires that every foreign partnership desiring to do business in this State shall pay a registration fee and an annual maintenance fee; and to RSA 349, Trade Names, which, among other provisions, requires, with certain exceptions, that every sole proprietor doing business in this State shall register the trade name of such business and that every person, proprietorship, partnership or association as defined above, engaged in the conduct of any business, enterprise, venture or activity within the State under a trade name, firm or style shall, subject to limitations, file in the office of the Secretary of State a certificate signed and sworn to by such person or proprietorship or by members of such partnership or association stating the name under which the business is to be conducted, the principal place of said business, and a brief description of the kind of business to be carried on, with the names and addresses of the principal parties engaged therein.

Bidders with the word "Engineer" or any form of such word in the name of their business should review RSA 319- A:20 which prohibits the Secretary of State from issuing a certificate of incorporation to any business or registering a foreign business organization with any derivative of the word "Engineer" in its name or which practices Engineering until the business

organization obtains a certificate of authorization from the State Board of Licensure for Engineers.

The Contractor's attention is further called to RSA 80:7, RSA 80:7a, RSA 80:7b and RSA 80:7c which read:

> **"80:7 Contractors' Taxes**. Whenever any person, firm or corporation enters into a contract or agreement with the state or any political subdivision thereof, it shall be a term or condition of such contract that the state or such political subdivision shall withhold or retain from the contract price provided for in such contract such sum or sums as will secure the payment of the taxes levied and assessed against the property of such contractor or against the property for which such contractor may be liable for the payment of taxes thereon, until such taxes are paid by such contractor, or are authorized paid by him from the sums so withheld, provided the collector of taxes or other person responsible for the collection of such taxes notifies the treasurer as aforesaid until the expiration of a period of ten days after the collector or other person responsible for the collection of the taxes has presented or set by first class mail, postage prepaid, addressed to the last known address of such contractor a tax bill, or a duplicate or copy of the tax bill presented or sent to a subcontractor or lessee for the payment of whose taxes said contractor is liable together with a notation to said contractor stating therein a date certain when said collector or other person responsible for the collection of such taxes will notify the treasurer as aforesaid. If the taxes so assessed are not paid by the person, firm or corporation liable therefore by December first of the year of assessment, the treasurer, upon notice from the collector of taxes that the taxes remain unpaid, shall pay over the amounts withheld to the collector and take his receipt therefore which shall be full and complete discharge of the treasurer from any further liability for the sum so withheld. If, on December first, the firm or corporation is not entitled to sufficient sums under the contract from which the treasurer can withhold the amount of taxes due, the treasurer as soon thereafter as sufficient sums are available for the purpose shall immediately pay over to the collector the sums so withheld. If the person, firm or corporation shall pay to the collector the taxes for which he or it is liable after notice to withhold by the collector to the treasurer, the collector shall immediately notify the treasurer so withholding, and the sum so withheld shall be paid to the person, firm or corporation, if otherwise due.
>
> **80:7-a Subcontractors' Taxes.** Whenever a person, firm or corporation enters into a contract or agreement with the state or any political subdivision thereof and such contractor employs a subcontractor to perform any of the work contemplated by such contract or agreement, it shall be a stated term or condition of such contract, that said contractor will be liable for the payment of any taxes assessed in the name of and upon the property of the subcontractor, used by said subcontractor in the performance of said sub-contract if assessed while said contract is being performed, to the extent of any sum or sums that may be due from the contractor has been notified by the collector of taxes in writing that payment of said taxes has been demanded of said subcontractor but said subcontractor has failed, neglected or refused to pay the same. Said contractor may retain from the contract price the amount for which he is liable hereunder. The amount of the taxes for which the said contractor may be liable hereunder may be withheld or retained from the contract price under the provisions of RSA 80:7.

80:7-b User's Taxes. Whenever a person, firm or corporation enters into a contract agreement with the state or any political subdivision thereof and such contractor has in his possession and uses any taxable property owned by another upon the job to be performed under the contract or agreement, it shall be a stated term or condition of such contract that the contractor having such property in his possession shall be liable for the amount of taxes assessed against such property in the name of the owner of such property while the same is in the possession of such contractor to the extent of the amount of any sum or sums of money that may be due from said contractor to the owner of such property for rental or hire thereof at the time or after the collector of taxes has notified said contractor in writing that he has made demand upon the owner of such property for payment of the taxes assessed upon said property but that the owner of such property has failed, neglected or refused to pays said taxes. Said contractor may retain from the sums to be paid for the use of such property the amount for which he is liable hereunder. The amount of the taxes for which the said contractor may be liable hereunder may be withheld or retained from the contract price under the provisions of RSA 80:7.

80:7-c Exemption from Attachment. The sums so withheld by the treasurer of the state or any political subdivision thereof upon notice from a collector of taxes under the provisions of RSA 80:7 and the sums so withheld and to be withheld by any contractor under the provisions of 80:7-a and 80:7-b shall be exempt from attachment, garnishment and trustee process by any person except in an action or suit brought by the collector of taxes to collect such taxes."

106.03 Patented Devices, Materials and Processes.

If the Contractor employs any design, device, material or process covered by letters of patent or copyright, the Contractor shall provide for such use by suitable legal agreement with the patentee or owner. The Contractor and the Surety shall indemnify and save harmless the City or any affected third party, from any and all claims for infringement by reason of the use of any such patented design, device, material or process, or any trademark or copyright and shall indemnify the City for any costs, expenses and damages which it may be obligated to pay by reason of any infringement, at any time during the prosecution or after the completion of work.

106.04 Federal Participation.

When the United States government participates in the cost of the work covered by the contract, the work shall be under the supervision of the Department but subject to the inspection and approval of the proper officials of the United States government and the work shall be performed in accordance with the applicable Federal statutes, rules and regulations. Such participation shall in no sense make the Federal government a party to the contract and will in no way interfere with the rights of either party hereunder.

106.05 Sanitary, Health and Safety Provisions.

The rules and regulations of Federal, State, and local health officials shall be observed. No employees of the Contractor or Subcontractor(s) shall be required to work in surroundings, or under conditions that are unsanitary, hazardous, or dangerous to their health or safety. Any inspector of the OSHA or other legally responsible agency involved in safety and health administration shall be admitted without delay and without presentation of an inspection warrant to all areas of the Work and Project upon presentation of proper credentials.

The Contractor shall provide and maintain in a neat, sanitary condition such accommodations for the use of its employees and Department representatives as may be necessary to comply with the requirements of the State and local Boards of Health, or of other bodies or tribunals having jurisdiction.
Attention is directed to Federal, State and local laws, rules and regulations concerning safety and health standards. The Contractor's attention is directed to the following safety and health standards which apply to all contracts:

It is a condition of this contract, and shall be made a condition of each subcontract entered into pursuant to this contract, that the Contractor and any Subcontractor shall not require any laborers or mechanics employed in performance of the contract to work in surroundings or under working conditions which are unsanitary, hazardous or dangerous to their health or safety as determined by the Occupational Safety and Health Administration, United States Department of Labor, which standards include by reference the established Federal safety and health regulations for construction.

The standards and regulations comprise Part 1910 and Part 1926 respectively of Title 29 of the Code of Federal Regulations and are set forth in the Federal Register. Subsequent to the date of this specification, in case any revisions in the Code of Federal Regulations are published, such revisions will be deemed to supersede the appropriate Part 1910 and Part 1926, and be effective as of the date set forth in the revised regulation.

The Contractor's attention is directed to the rock drilling regulations adopted by the New Hampshire State Department of Health and Human Services, Division of Public Health Services under authority of the provisions of RSA 147:2 (Supp.).

The Contractor shall also be aware of laws and regulations relating to hazardous materials which may be encountered during construction operations, either within project limits or at material sites off the project. The health and safety of employees, the general public and the potential of damage to the overall environment is possible if hazardous materials are not recognized, reported and the appropriate action taken to dispose of, remove from the site or otherwise contain the possible contaminants.

State laws such as Chapters 141-E, Asbestos Management and Control, 147-A, Hazardous Waste Management, and 149-M, Solid Waste Management identify the major areas of concern. Regulations developed by the Department of Environmental Services, He-P-1905 and He-P-

1901, identify and list the various contaminants related to hazardous waste and solid waste respectively.

In protecting employees from hazardous or toxic exposure, Chapter 277-A, Toxic Substances In The Workplace, states that the substances in the workplace and 277-A:5, in part, states that the employers shall inform employees as to possible contact with toxic materials and conduct education and training programs.

Exposure to hazardous materials may result from contact with, but not necessarily limited to, such items as drums, barrels, other containers, waste such as cars, batteries and building construction debris. Containers leaking unknown chemicals or liquids, abandoned cars leaking petroleum products, batteries leaking acid, construction debris which may include asbestos or any other source of suspected hazardous material found within excavation areas or stockpiled on land within construction limits shall be referred to the Department of Environmental Services so that a proper identification of the materials may be made and disposal procedures initiated as required.

The Contractor alone shall be responsible for the safety, efficiency and adequacy of his plant, appliances and methods and for any damage which may result from their failure or their improper construction, maintenance or operation.

The Contractor shall designate a Safety Officer whose duty shall be to monitor the project on a daily basis in order to insure that all safety measures alluded to in the contract are strictly adhered to. Special attention shall be paid to maintaining existing guide, regulatory and warning signs affecting the movement of traffic.

106.06 Public Convenience and Safety.

The Contractor shall at all times so conduct his work as to assure the least possible interference with private businesses and public travel. He shall, at his own expense, wherever necessary or required, maintain fences, furnish watchmen, maintain lights and take such other precautions as may be necessary to protect life and property. The safety and convenience of the general public and the residents in and around the project shall be provided for by the Contractor as specified under 103.03 and Section 619. The Contractor shall be responsible for proper and timely notification to residents prior to any interruptions of their access or services.

Fire hydrants on or adjacent to the project shall be kept accessible to the fire apparatus at all times and no obstructions shall be placed within 10 feet of any such facility. No sidewalks, gutters, drainage inlets or portions of streets adjoining the project under construction shall be obstructed more than is necessary. The existing street surface shall be maintained satisfactorily with suitable patching material when ordered.

In the event that all or part of any street is officially closed to traffic during construction, the Contractor shall provide and maintain safe and adequate traffic accommodations for residences and businesses along and adjacent to the street so closed.

The Contractor shall provide all safeguards, safety devices and protective equipment and take any other actions necessary to insure the protection of the life and health of the public.

Except for work done under items in the contract, work prescribed herein will not be paid for separately but will be considered as subsidiary.

106.07 Railway-Highway Provisions.

All work to be performed by the Contractor on the railroad right-of-way shall be performed at such times and in such manner as not to unnecessarily interfere with the movement of trains or traffic upon the track of the railway company. The Contractor shall use all care and precaution in order to avoid accidents, damage or unnecessary delay or interference with the railway company's trains or other property.

The Contractor shall secure from the railroad flagging service for the protection of railroad traffic during the progress of work by the Contractor on, over, under or adjacent to the tracks of the railroad. The Contractor shall reimburse the railroad for the expense of such service.

If the railroad grants the Contractor's request for any temporary crossing, the Contractor shall assume the cost of installing, maintaining, removing and protecting such temporary crossing. The type and method of protection of the crossing and the insurance required shall be as determined by the railroad.

106.08 Construction Over or Adjacent to Navigable Waters.

All work over, on or adjacent to navigable waters shall be so conducted that free navigation of the waterways will not be interfered with and that the existing navigable depths will not be impaired except as allowed by a permit issued by the U.S. Coast Guard and/or the U.S. Army Corps of Engineers, as applicable.

106.09 Barricades and Warning Signs.

The Contractor shall provide, erect and maintain all necessary barricades, suitable and sufficient lights, danger signals, signs and other traffic control devices and shall take all necessary precautions for the protection of the work and safety of the public. Streets closed to traffic shall be protected by effective barricades. Obstructions shall be illuminated during hours of darkness. Suitable warning signs shall be provided to control and direct traffic in a proper manner.

The Contractor shall erect warning signs in advance of any place on the project where his operation may interfere with the use of a street by traffic and at all intermediate points where the new work crosses or coincides with an existing street. Warning signs shall be placed and maintained in accordance with the plans and/or the Manual on Traffic Control Devices

The Contractor will be held responsible for all damage to the work from traffic, pedestrians, animals or any other cause due to lack of adequate signs or barricades.

All barricades, warning signs, lights, temporary signals and other protective devices shall conform to the MUTCD and section Section 619.

Except for work done under Section 619, the work prescribed herein will not be paid for separately but will be considered as subsidiary.

106.10 Use of Explosives.

All laws, ordinances, and regulations, including the rules of the Director of State Police as well as Part 1926 -Safety and Health Regulations for Construction (OSHA) of Title 29 of the Code of Federal Regulations and the appropriate parts of Title 30, whichever is the most restrictive, shall be followed in the use, handling, loading, transporting, and storing of explosives and blasting agents.

The Contractor's attention is called to RSA Chapter 158, which gives the Director of the Division of State Police the authority to regulate the sale, storage, handling, transportation, inspection, administration, and use of explosives or explosive substances.

The Contractor shall be aware that the City of Manchester Fire Department has regulations in place regarding the use of explosives. All rules and regulations shall be complied with and proper permits for blasting operations shall be applied for. Cost for these permits shall be at the Contractor's expense

When the use of explosives is necessary for the prosecution of the work, the Contractor shall exercise the utmost care not to endanger the life or property, including new work. The Contractor will be responsible for all property, injury or death resulting from the use of explosives.

The Contractor shall notify each property owner and public utility company having structures in proximity to the site of the work of his intention to use explosives. Such notice shall be given sufficiently in advance to enable the parties to take such steps as they may deem necessary to protect their property from injury.

All explosives shall be stored in a secure manner. All storage places shall be clearly marked. Explosives shall be stored in a magazine which shall be located in respect to buildings, railways, and highways in a manner as required by the Director of State Police.

Explosives shall be used only during daylight hours, shall be handled only by competent workmen and particular care shall be taken to insure that no unexploded charges remain in the work.

All persons within the danger zone of blasting operations shall be warned and no blasting shall be done until the zone has been cleared. Sufficient flaggers shall be stationed outside the danger zone to stop all approaching traffic during blasting operations.

106.11 Protection and Restoration of Property and Landscape.

The Contractor shall use every precaution to prevent injury or damage to wires, poles or other property of public utilities; trees, shrubbery, crops and fences along and adjacent to the right-of-way; all underground structures such as pipes and conduits, within or without the right-of-way; all pavement markings which may be placed upon the new pavement; all signs authorized or erected by the Department of Public Works; and to protect and carefully preserve all property markers until an authorized agent has witnessed or otherwise referenced their location.

The Contractor shall be responsible for all damage or injury to property of any nature during the prosecution of the work resulting from any act, omission, neglect or misconduct in the manner or method of executing the work or at any time due to defective work or materials and said responsibility will not be released until the project has been completed and accepted.

When or where any direct or indirect damage or injury is done to public or private property by or on account of any act, omission, neglect or misconduct in the execution of the work or in consequence of the nonexecution thereof, the Contractor shall restore, without compensation, such property to a condition similar or equal to that existing before such damage or injury was done, by repairing, rebuilding or otherwise restoring as may be directed or shall make good such damage or injury in an acceptable manner.

If the Contractor fails to repair, rebuild or otherwise restore such property as may be deemed necessary, the Engineer, after 48 hours notice, may proceed to do so and the cost thereof will be deducted from any money due or which may become due the Contractor under the contract.

106.11.1 Cultural Resources.

When construction operations encounter possible historic or potential Native American artifacts of archeological significance, operations shall be immediately suspended in the area and the Engineer notified. The Engineer will contact the State archaeologist who with the Project Manager will determine the disposition of the site. It may be necessary for others to conduct investigations to determine the extent of importance of the site and to recover the remains prior to commencement of the project within the defined boundaries of the site. Compensation and time extensions for this work shall be determined in accordance with 103.02

When construction operations encounter human remains, operations in the immediate area shall be temporarily discontinued and the Contractor shall notify the Engineer who will notify state and local police. The County Medical Examiner will determine whether the remains require a criminal or archaeological investigation. A buffer zone will be defined for the burial sites; no work will be performed within that zone until after removal of the remains by others. The Contractor will be directed to continue work in the area when the investigation is completed. Compensation and time extensions for this work shall be determined in accordance with 103.02.

The Contractor shall maintain a 25-foot buffer zone around known cemeteries.

106.12 Responsibility for Damage Claims.

The Contractor shall assume the defense of all claims whatsoever character against the Contractor or the City and shall indemnify and save harmless the City and all of its officers, agents and employees from all suits, actions or claims of any character, name and description brought for, or on account of any injuries or damages received or sustained by any person, persons or property by or from the said Contractor or any subcontractors used on the project or by or in consequence of any neglect in safeguarding the work, or through the use of unacceptable materials in constructing the project or by or on account of any act or omission, neglect or misconduct of the said Contractor or any subcontractors, or by or on account of any claims or amounts recovered for any infringement of patent, trademark or copyright, or from any claims or amount arising or recovered under the "Workmen's Compensation Law," or any other law, the said Contractor under any by virtue of this contract, as shall be considered necessary by the Commissioner, may be retained for the use of the City, or in case no money is due, his Surety shall be held until such suit or suits, action or actions, of claim or claims for injuries or damages, as aforesaid, shall have been settled and suitable evidence to that effect furnished to the Director except that money due the Contractor will not be withheld when the Contractor produces evidence satisfactory to the Director that the Contractor and all subcontractors are protected by and will maintain adequate public liability and property damage insurance or bond for the payment of any judgement in such suits, actions or claims.

106.13 Indemnification and Insurance Requirements.

In consideration of the utilization of the Contractor's services by the City of Manchester and other valuable consideration, the receipt of which is hereby acknowledged, the Contractor agrees that all persons furnished by the Contractor shall be considered the Contractor's employees or agents and that the Contractor shall be responsible for payment of all unemployment, social security and other payroll taxes including contributions from them when required by law.

A. The Contractor hereby agrees to protect, defend, indemnify and hold the City of Manchester and its employees, agents, officers and servants free and harmless from any and all losses, claims, liens, demands and causes of action of every kind and character including but no limited to, the amounts of judgments, penalties, interests, court costs, legal fees and all other expenses incurred by the City arising in favor of any party including claims, liens, debts, personal injuries including injuries sustained by employees of the City, deat or damages to property (including property of the City) and without limitation by enumeration, all other claims or demands of every character occurring or in any way incident to, in connection with or arising directly or indirectly out of this Contractor Agreement. The Contractor agrees to investigate, handle, respond to, provide defense for and defend any such claims, demands or suits at the sole expense of the Contractor. The Contractor also agrees to bear all other costs and expenses related thereto, even if the claim or claims alleged are groundless, false or fraudulent.
This provision is not intended to create any cause of action in favor of any third party against Contractor or the City or to enlarge in any way the Contractor's liability but is

intended solely to provide for indemnification of the City from liability for damages or injuries to third persons or property arising from Contractor's performance hereunder.

B. The Contractor agrees to maintain in full force and effect:

1. Comprehensive General Liability insurance written on occurrence form, including completed operations coverage, personal injury liability coverage, broad form property damage liability coverage, "xcu" coverage and contractual liability coverage insuring the agreements contained herein. The minimum limits of liability carried on such insurance shall be $1,000,000 each occurrence and where applicable in the aggregate combined single limit for bodily injury and property damage liability; $1,000,000 annual aggregate personal injury liability.

   When explosives are to be used in the prosecution of the work, the insurance required shall also contain provisions for protection against damage claims due to such use of explosives and the certificate shall attest to this fact.

2. Automobile liability insurance for owned, non-owned and hired vehicles. The minimum limit of liability carried on such insurance shall be $1,000,000 each accident, combined single limit for bodily injury and property damage.

3. Worker's Compensation insurance whether or not required by the NH Revised Statutes Annotated, 1955, as amended, with statutory coverage and including employer's liability insurance with limits of liability of at least $100,000 for each accidental injury and with respect to bodily injury by disease, $100,000 each employee and $500,000 per policy year.

C. Any and all deductibles on the above described insurance policies shall be assumed by and be for the account of, and at the sole risk of the Contractor.

D. Insurance companies utilized must be admitted to do business in N.H. or be on the Insurance Commissioner's list of approved non-admitted companies and shall have a rating of (A) or better in the current edition of Best's Key Rating Guide.

E. The Contractor agrees to furnish certificate(s) of the above mentioned insurance to the City of Manchester within fourteen (14) days from the date of this agreement and, with respect to the renewals of the current insurance policies, at least thirty (30) days in advance of each renewal date. Such certificates with respect to comprehensive general liability and auto liability insurance, name the CITY OF MANCHESTER AND THE DEPARTMENT OF PUBLIC WORKS as an additional insured and with respect to all policies shall state that in the event of cancellation or material change, written notice shall be given to the City of Manchester, Office of Risk Management, One City Hall Plaza, Manchester, New Hampshire 03101 at least thirty (30) days in advance of such cancellation or change.

F. The purchase of the insurance required or the furnishing of the aforesaid certificate shall not be a satisfaction of the contractor's liability hereunder or in any way modify the Contractor's indemnification responsibilities to the City of Manchester and the Department of Public Works.

G. It shall be the responsibility of the Contractor to ensure that all subcontractors comply with the same insurance requirements that he is required to meet.

H. Railroad Protective Insurance (as necessary and subject to Special Provisions). The Contractor shall take out insurance coverage known as "Railroad Protective Insurance", in the name of the Railroad(s) in amounts and in a form as required and approved by the Railroad(s) involved. The original policies of such insurance shall be furnished to the Railroad(s) involved and certificates furnished to the City.

106.14 Use and Occupancy Prior to Acceptance by City.

The Contractor agrees to the use and occupancy of a portion of the project before formal acceptance by the City, provided the City:

A. Secures written consent of the Contractor except in the event, in the opinion of the Engineer, the Contractor is chargeable with unwarranted delay in completing the contract requirements;

B. Secures consent of the Surety; and

C. Secures endorsement from the insurance carrier(s) permitting use of the project during the remaining period of construction.

106.15 Contractor's Responsibility for Work.

Until final written acceptance of the project by the Engineer, the Contractor shall have the charge and care thereof and shall take every precaution against the injury or damage to any part thereof by the action of the elements or from any other cause, whether arising from the execution or from the nonexecution of the work. The Contractor shall rebuild, repair, restore and make good all losses, injuries or damages to any portion of the work occasioned by any of the above causes before final acceptance and shall bear the expense thereof except loss, injury or damage to the work due to unforeseeable causes beyond the control and without the fault or negligence of the Contractor, including but not restricted to natural disasters such as earthquake, tidal wave, tornado, hurricane or other cataclysmic phenomenon of nature. The repair of such excepted damage shall be done by the Contractor and paid for at the contract prices or by extra work as determined and ordered by the Engineer.

In case of suspension of the work, except as provided in Section 619, the Contractor shall be responsible for the work under the contract and shall take such precautions as may be necessary to prevent damage to the project, provide for normal drainage and shall erect any necessary temporary structures, signs or other facilities at his expense. During such period of suspension of work, the Contractor shall properly and continuously maintain in an acceptable growing

condition all living material in newly established plantings, seedings and soddings furnished under the contract and shall take adequate precautions to protect new tree growth and other important vegetative growth against injury.

The Contractor shall not be relieved of his responsibility by any right of the Engineer to give permission relating to any part of the work or by any such permission given or by failure of the Engineer to give such permission.

106.16 Contractor's Responsibility for Utility Property and Services.

It shall be the Contractor's responsibility to ascertain the existence of any underground improvements or facilities which may be subject to damage by reason of his operations. The fact that any underground facility is not shown upon the plans shall not relieve the Contractor of his responsibility under this Section.

At points where the Contractor's operations are adjacent to properties of railway, telegraph, telephone and power companies, or are adjacent to other property, damage to which might result in considerable expense, loss or inconvenience, work shall not be commenced until all arrangements necessary for the protection thereof have been made.

Prior to doing work that might damage underground facilities or interfere with their service, the Contractor shall take steps to have the owners verify the locations shown on the plans and identify such facilities in the field. He shall cooperate with the owners to arrange that stakes or other markings set by the owners will be set so that maintenance of such points may be possible as long as necessary. The Contractor shall maintain such references and will be responsible for damage to any underground facility if the owner has properly located it. The Contractor shall maintain access to the installations in order to permit maintenance of services or permit repairs in case of interruptions of service. See 104.06.

The Contractor shall cooperate with the owners of any underground or overhead utility in their removal and rearrangement operations in order that these operations may progress in a reasonable manner, that duplication of rearrangement work may be reduced to a minimum and that services rendered by those parties will not be unnecessarily interrupted.

In the event of interruption to utility services as a result of accidental breakage or as a result of being exposed or unsupported, the Contractor shall promptly notify the proper authority and shall cooperate with the said authority in the restoration of service until the service is restored. No work shall be undertaken around fire hydrants until provisions for continued service have been approved by the local fire authority.

Full compensation for furnishing all labor, materials, tools, equipment and incidentals, and for doing all the work involved in protecting or repairing property as specified above and in 104.06, shall be considered as included in the prices paid for the various contract items of work and no additional compensation will be allowed therefor.

Should the Contractor desire to have any rearrangement made in any utility facility, or other improvement, for his convenience in order to facilitate his construction operations, which rearrangement is in addition to, or different from, the rearrangements indicated on the plans or in the special provisions, he shall make whatever arrangements are necessary with the owners of such utility or other non-highway facility for such rearrangement and bear all expenses in connection therewith.

106.17 Personal Liability of Public Officials.

In carrying out any of the provisions of these specifications, or in exercising any power of authority granted to them by or within the scope of the contract, there shall be no liability upon the Director, Engineer or authorized representatives, either personally or as officials of the City, it is being understood that in all such matters they act solely as agents and representatives of the Department.

106.18 No Waiver of Legal Rights.

Upon completion of the work, the Department will expeditiously make final inspection and notify the Contractor of acceptance. Such final acceptance, however, shall not preclude or stop the Department from correcting any measurement, estimate or certificate made before or after completion of the work, nor shall the Department be precluded or stopped from recovering from the Contractor or his Surety, or both, such overpayment as it may sustain by failure on the part of the Contractor to fulfill his obligations under the contract. A waiver on part of the Department of any breach of any part of the contract shall not be held to be a waiver of any other or subsequent breach.

The Contractor without prejudice to the terms of the contract, shall be liable to the Department for latent defects, fraud or such gross mistakes as may amount to fraud, and as regards the Department's rights under any warranty or guaranty.

106.19 Environmental Protection.

The Contractor shall comply with all Federal, State and local laws and regulations controlling pollution of the environment. He shall take necessary precautions to prevent pollution of streams, lakes, ponds and reservoirs with fuels, oils, bitumens, chemicals or other harmful materials and to prevent pollution of the atmosphere from particulate and gaseous matter. Detail requirements implementing this policy appear elsewhere in these specifications or on plan documents of the contract.

106.20 Hazardous Materials

The Contractor shall be aware of laws and regulations relating to hazardous materials that may be encountered during construction operations, either within project limits or at material sites off the project. The health and safety of employees, the general public, and the potential for damage to the overall environment is possible if hazardous materials are not recognized, reported, and the

appropriate action taken to dispose of, remove from the site, or otherwise contain the possible contaminants.

State laws such as RSA141-E, Asbestos Management and Control, RSA 147-A, Hazardous Waste Management, and RSA 149-M, Solid Waste Management, identify the major areas of concern. Parts Env-Wm 100-110, Env-Wm 101-300, 2100-3700, and Env-Wm 3900 of the New Hampshire Code of Administrative Rules identify various contaminants related to hazardous waste, solid waste, and asbestos and their management, respectively.

If any abnormal condition is encountered or exposed that indicates the presence of a hazardous material or toxic waste, construction operations shall be immediately suspended in the area and the Engineer notified. No further work shall be conducted in the area of the contaminated material until the site has been investigated and the Department has given approval to continue the work in the area. The Contractor shall fully cooperate with the Engineer and perform any remedial work as directed. Work shall continue in other areas of the Project unless otherwise directed.

Exposure to hazardous materials may result from contact with, but not necessarily limited to, such items as drums, barrels, other containers, and waste such as cars, batteries, and building construction debris. Containers leaking unknown chemicals or liquids, abandoned cars leaking petroleum products, batteries leaking acid, construction debris that may include asbestos, or any other source of suspected hazardous material found within excavation areas or stockpiled on land within construction limits shall be referred to the Department of Environmental Services so that a proper identification of the materials may be made and disposal procedures initiated as required.

Disposition of the hazardous material or toxic waste shall be made under the requirements and regulations of the Department of Environmental Services. Work required to dispose of these materials shall be performed under Contract item(s), or Supplemental Agreement; compensation and time adjustment shall be as provided for in 103.02.

106.21 No Third Party Beneficiary.

It is specifically agreed between the parties executing this contract that it is not intended by any of the provisions of any part of the contract to create the public or any member thereof a third party beneficiary hereunder, or to authorize anyone not a party to this contract to maintain a suit for personal injuries or property damage pursuant to the terms or provisions of this contract. The duties, obligations and responsibilities of the parties to this contract with respect to third parties shall remain as imposed by law.

106.22 Civil Rights.

The Contractor's attention is directed to Federal, State and local laws, rules and regulations which set forth unlawful employment practices including that of discrimination because of race, religion, color, sex or national origin and which define actions required for Affirmative Action and Disadvantaged Business Enterprise programs.

The Contractor shall take affirmative action to insure that residents of the City of Manchester are given maximum opportunity for employment and that business concerns located in, or owned in substantial part by, residents of the City of Manchester are to the greatest extent feasible, awarded contracts.

The City may request, in which case the Contractor shall provide, such information as the City shall determine is necessary to ascertain the Contractor's conformance with the provisions of this section.

106.23 Assignment Provision.

The Contractor hereby agrees that it will assign to the City all causes of action that it may acquire under the antitrust laws of New Hampshire and the United States as the result of conspiracies, combinations or contracts in restraint of trade which affect the price of goods or services obtained by the City under this contract if so requested by the City.

SECTION 107 -- PROSECUTION AND PROGRESS

107.01 Subletting of Contract.

The Contractor shall give his personal attention constantly to the faithful prosecution of the work, shall keep the same under his personal control and shall not assign by power of attorney or otherwise, nor sublet the work, or any part thereof, without written consent of the City and shall not either legally or equitably assign any of the monies payable under this agreement, or his claim thereto, unless by and with the like consent of the City and surety on the Bond.

No subcontracts or transfer of contract shall relieve the Contractor, bonding company or surety of liability under the contract and bonds.

The Contractor shall agree that all contracts with Subcontractors and/or lower tier Subcontractors will be in writing.

If, during the course of the work, a Subcontractor fails to complete or perform satisfactory work, the Contractor shall be required to complete the work with or without another approved subcontractor. The Contractor shall not substitute another Subcontractor for an approved Subcontractor except for reasons acceptable to the Department nor shall an approved Subcontractor be allowed to perform work not prescribed in the executed agreement on file without prior consent by the Department.

All work which is performed by subcontract shall, nevertheless, remain the responsibility of the Contractor and shall be included in the Unit Bid Prices.

The Contractor shall, before commencing work, provide the Engineer with a list of Subcontractor's names along with copies of the subcontract agreements outlining the limits of their work.

No correspondence will be accepted by the Engineer or City from any Subcontractor. The Contractor will retain sole responsibility for management and discharge of the Contract.

Shop drawings, samples and all similar submittals originating with a Subcontractor shall be reviewed by the Contractor before submission to the Engineer and shall bear his stamp of approval.

The Contractor will make no covenants with his Subcontractors which, in any way, alter the requirements of the Contract.

Should the Engineer discover a Subcontractor to be incompetent or in any way in violation with the terms of the contract, he will so notify the Contractor in writing and the Contractor shall take immediate steps to rectify the problem, even to the extent of terminating this subcontract.

107.02 Notice to Proceed.

The Notice to Proceed will stipulate the date on which it is expected the Contractor will begin the construction and from which date Contract Time will be charged. Commencement of work by the Contractor, prior to the Notice to Proceed, shall constitute the beginning of construction and the date from which Contract Time will be charged.

107.03 Preconstruction Activities

Prior to commencement of any major work on the Project, a pre-construction conference shall be held to review the proposed project schedule and coordinate the Work of the Contractor, utilities, and Subcontractors. The Contractor shall be prepared to discuss in detail the proposed schedule; Storm Water Pollution Prevention Plan (SWPPP), and the Traffic Control Plan particularly as these relate to coordination with schedules of the utilities and Subcontractors. In addition, the Contractor shall be prepared to provide details on the sources and delivery of materials.

If required, the Contractor shall submit a written SWPPP and Traffic Control Plan to the Engineer for approval in accordance with 104.02.

The Contractor shall submit a Progress Schedule to the Engineer for documentation. The Progress Schedule will be used to indicate the proposed sequence of major construction operations and to check the actual progress of work. The Progress Schedule shall provide sufficient detail to assure the completion of the project in accordance with the plans and specifications within the time set forth in the contract. The Engineer reserves the right to return the Progress Schedule for revision based on the form, compliance with the Contract and good scheduling practice. No work shall proceed on the project, other than mobilizing, installation of the permanent construction signs, until the Progress schedule has been submitted and accepted for documentation.

107.04 Prosecution and Progress.

The Contractor shall provide sufficient materials, equipment and labor to guarantee completion of the project in accordance with the plans and specifications within the time set forth in the contract.

If the Contractor falls significantly behind the approved schedule, the Contractor shall submit for approval a revised schedule for completion of the work within the contract time and modify the operations to provide such additional materials, equipment and labor necessary to meet the revised schedule. Should the prosecution of the work be discontinued for any reason, the Contractor shall notify the Engineer at least 48 hours in advance of resuming operations.

The Storm Water Pollution Prevention Plan (SWPPP)shall detail the methods planned for accomplishment of temporary and permanent erosion control work for operations including, but not limited to, clearing, grubbing, grading, drainage and bridge operations, especially in or

adjacent to existing waters, water courses or wetlands. The erosion control schedule shall include proposed methods of erosion control on haul roads, borrow pits and disposal areas.

The Traffic Control plan shall include in detail the Contractor's plan for controlling traffic through the project and shall be in conformance with the MUTCD and other applicable standards. This plan shall include specific design details on lane closures, detours and temporary bridges. The plans shall also include the layout of signing, barricades and other warning devices, as well as the placement of flaggers and uniformed officers. If the Contractor does not submit a Traffic Control Plan for approval, it will be presumed that the Contractor plans to adhere to the Traffic Control Plan contained in the contract. Changes to the approved traffic control plan shall be submitted to the Engineer for review and approval at least 10 calendar days in advance of implementation of the change.

107.05 Limitation of Operations.

The Contractor shall conduct the work at all times in such a manner and in such sequence as will assure the least interference with traffic. He shall have due regard to the location of detours and to provisions for handling traffic. The Engineer may require the Contractor to finish a section on which work in progress before work is started on any additional sections if the opening of such section is essential to public convenience.

No work shall be performed on Sundays or legal holidays except in cases of emergency or upon permission of the Engineer. Whenever a holiday is observed on a Friday or a Monday, the Contractor may be required to suspend work for 3 calendar days. Prior to the close of work, the project shall be placed in the best condition possible for the comfort and safety of the traveling public, and definite arrangements shall be made for responsible personnel to maintain the project in the above condition throughout the period of suspension. No work will be permitted at night unless sufficient lighting is provided to insure the same degree of accuracy of workmanship and the same conditions regarding safety as would be obtained by daylight. Moreover, no work shall be done at night contrary to local ordinances.

107.06 Character of Employees.

The Contractor shall, at all times, employ sufficient labor, supervision and equipment for prosecuting the several classes of work to full completion in the manner and time required by the terms of the Contract. All of the Contractor's personnel shall have sufficient skill and experience to perform properly the work assigned to them. Employees engaged in special work or skilled work shall have sufficient experience in such work and in the operation of the equipment required to perform the Work satisfactorily.

Any person employed by the Contractor or by any subcontractor who, in the opinion of the Engineer, does not perform the Work in a proper and skillful manner or is disorderly shall, at the written request of the Engineer, be removed forthwith by the Contractor or Subcontractor employing such person, and shall not be employed again in any portion of the work without approval from the Engineer.

Should the Contractor fail to remove such person or persons as required above, or fail to furnish suitable and sufficient personnel for the proper prosecution of the Work, the Engineer may suspend the Work by written notice until compliance with such orders. The Contractor is not entitled to a time extension or compensation for delays or costs incurred as a result of such a suspension.

107.07 Methods and Equipment.

All equipment which is proposed to be used on the work shall be of sufficient size and in such mechanical condition as to meet requirements of the Work and to produce a satisfactory quality of work. Equipment used on any portion of the project shall be such that no injury to the Street, adjacent property, or other Streets, will result from its use.

If any equipment is not maintained in full working order or, as used by the Contractor, proves inadequate to obtain results prescribed, the Engineer may order said equipment to be improved or other equipment substituted or added.

When the methods and equipment to be used by the Contractor in accomplishing the construction are not prescribed in the contract, the Contractor is free to use any methods or equipment that will accomplish the Work in conformity with the requirements of the contract.

Where practicable, spray applications of materials containing fertilizer, asphalt and other injurious substances which cause pitting or which impair the reflective and brightness values of metal shall precede the installation of susceptible roadside structures such as signs, sign supports and guardrail; otherwise, coverings shall be used to protect such structures installed prior to the spray applications.

When the contract specifies the use of certain methods and equipment, such methods and equipment shall be used unless others are authorized. If the Contractor desires to use a method or type of equipment other than that specified in the Contract, the Contractor may request the authority from the Engineer to do so. The request shall be in writing and shall include a full description of the methods and equipment proposed to be used and the reasons for desiring to make the change. If approval is given, it will be on the condition that the Contractor will be fully responsible for producing construction work in conformity with Contract requirements. If, after trial use of the substituted methods or equipment, the Engineer determines that the work produced does not meet Contract requirements, the Contractor shall discontinue the use of the substitute method or equipment and shall complete the remaining work with the specified methods and equipment. The Contractor shall remove the deficient work and replace it with work of specified quality or take such corrective action as directed. No change will be made in basis of payment for the construction items involved nor in contract time as a result of authorizing a change in methods or equipment under these provisions.

Failure on the part of the Contractor to observe the necessary precautions to prevent damage to property or injury to public shall be sufficient grounds for suspension of the Work. The Contractor is not entitled to a time extension or compensation for such suspensions.

107.08 Determination of Contract Time Extension for Excusable, Nonexcusable, Noncompensable, and Compensable Delays.

A. General. The number of days allowed for completion of the Work or the completion date will be stated in the Proposal and Contract. It is an essential part of the Contract that the Contractor performs fully, entirely, and in an acceptable manner, the Work under the Contract within the Contract Time. It is likewise essential that those parts, phases, or stages, as stipulated in the Contract, for the purpose of benefiting the traveling public or for the coordination of work performed by others, shall be completed by the date indicated. An extension of the Contract Time may be granted by the Department for conditions that prevent the Contractor from effective prosecution of the critical activity which at that time control the progress of the work as specified in 107.08.B or 107.08.C. Strict adherence to the provisions of this section is necessary for the Engineer's consideration of an extension to the Contract Time.

The Engineer will not evaluate a request for extension of the Contract Time unless the Contractor notifies the Engineer as specified in 103.02. (G) and further provides the documentation as specified in 107.08.G. It is the intention of the Department to act to mitigate or grant time extensions for delays before the delay is actually experienced by the project. For this reason, the Contractor shall provide proper notice of a delay per 103.02.(G) when it is first recognized, not at its conclusion. The Contractor's contention that it did not know the actual duration of the delay is not a valid excuse for failing to comply with the notice requirements of 103.02.(G). However, if the Contractor requests in writing and the Engineer agrees, the Engineer may extend the deadlines set forth in 103.02.(G).

The Engineer will evaluate the Contractor's analysis and determine the time extension due, if any.

The Contractor's plea that insufficient time was specified is not a valid reason for an extension of time. When the Contract sets forth a calendar completion date, due consideration will have been given to the Saturdays, Sundays, legal holidays, and the period between December 1 and April 1 inclusive in the anticipated period of construction. No extension of the Contract completion date will be allowed due to such days. When the Contract stipulates a completion date that falls on a Saturday, Sunday, or legal holiday, or when the time as extended by the Engineer falls on a date that is a Saturday, Sunday, or legal holiday, the Contract Time will be extended to the next working day.

The extended Completion Date shall have the same standing and effect as though it was the original Completion Date.

If the Contractor contends that an excusable delay is also compensable, as specified in 107.08.C, the Contractor shall submit a detailed cost analysis of the requested additional compensation prepared in accordance with 108.04 along with the request for the extension of the Completion Date.

In the event that the Engineer extends the Contract Time into a period of the year during which the working conditions are less favorable, consideration will be given to further extension of time as influenced by the nature of the work involved.

B. Excusable, Noncompensable Delay. Excusable, non-compensable delays are delays that are not the Contractor's or the Department's fault or responsibility. The Contractor is not entitled to compensation for excusable, non-compensable delays. The following are excusable, non-compensable delays:

1. Delays due to floods, tornadoes, lightning strikes, earthquakes, or other natural disasters.
2. Delays due to unfavorable weather or ground conditions on days, other than the days from December 1 through April 1, determined as follows: for each day on which weather or ground conditions prevent the Contractor from effective prosecution of the critical activity that at that time controls the progress of the work, an extension of one working day will be added to the Contract Time. The Engineer will not consider weekends and holidays as lost work days unless the Engineer directs the Contractor to work those days.
3. Extraordinary delays in material deliveries the Contractor or its suppliers cannot foresee or avoid resulting from freight embargoes, government acts, or nation-wide material shortages. When an extension of the Contract Time is requested due to delays in the delivery of critical materials, sufficient documentary evidence must be furnished to the Department at the time the delay occurs showing that such delay results from the materials being unavailable by reason of an unusual market condition such as an industry-wide strike, natural disaster, or area-wide shortage which arises after bids are taken and which prevents the timely procurement of materials. The Contractor is not due a time extension for delays due to slow delivery from a source of supply when the required material is available elsewhere. Delays due to the Contractor's, Subcontractor's, or supplier's insolvency or mismanagement are not excusable.
4. Delays due to the failure of the Department to provide right-of-way in accordance with the Contract.
5. Delays due to civil disturbances or acts of the public enemy.
6. Delays due to fires.
7. Delays due to epidemics or quarantine restrictions.
8. Delays from labor strikes that are beyond the control of the Contractor's, Subcontractor's, or supplier's and are not caused by improper acts or omissions of the Contractor, Subcontractor, or supplier.
9. Delays due to added quantities of work or Extra Work. The Department will base the time extension on the ratio of the original bid amount to the final Contract amount, computed as follows:

$$TE = \frac{(TC - CA)\ OT}{CA}$$

TE is the time extension in working days (rounded to the next highest whole day);

OT is the original Contract time in working days. This time does not include time added by Contract Revisions or Saturdays, Sundays, legal holidays, and the period between December 1 and April 1;

TC is the total cost of the work performed, including cost increases resulting from Extra Work for which a time extension was not previously provided; and the net increase or decrease in the Contract amount resulting from the performance of greater or lesser quantities for which an extension was not previously provided; and excluding costs associated with liquidated damages, incentive/disincentive or bonus payments, and costs for Contract Revisions for which additional time has already been allowed;

CA is the original Contract Amount.

To determine a revised completion date, the Department will add the working days indicated by the formula to the original Contract completion date.

If the Contractor believes that this formula does not result in a fair and reasonable time extension for Extra Work or for increased quantities, as an alternative, but not in addition, to the formula, the Contractor may submit an alternative analysis based on the delay to the critical path of the Progress schedule accepted for documentation caused by the Extra Work or additional quantities. The Contractor's analysis must consider not only the work added, but also the work deleted in its analysis.

10. Delays due to utility or Railroad relocations or any other Railroad coordination delays.
11. Delays due to an emergency episode procedure carried out under the direction of the New Hampshire Department of Environmental Services, Division of Air Resources.
12. All other delays not the Contractor's or Department's fault or responsibility and not reasonably foreseeable or avoidable by the Contractor.

C. Excusable, Compensable Delay. Excusable, compensable delays are delays that are not the Contractor's fault or responsibility but are the Department's fault or responsibility. For the following excusable, compensable delays, the Engineer will extend the Contract Time if the conditions specified in 107.08.A are met:

a) Delays due to revised Work as specified in 103.02.(B) or 103.02.(D).
b) Delays due to an Engineer-ordered suspension as specified in 103.02.(C).
c) Delays due to acts of the government or a political subdivision other than the Department; however, these compensable delay costs are limited to escalated labor and material costs only, as allowed in 108.04.
d) Delays due to the neglect of the Department or its failure to act in a timely manner. Compensation for excusable, compensable delays will be determined by the Engineer according to 108.04.

D. Non-Excusable Delays. Non-excusable delays are delays that are the Contractor's fault or responsibility or delays that the Contractor could have reasonably anticipated. Delays due to the Contractor's, Subcontractor's, or supplier's insolvency or mismanagement are not excusable. The Contractor is not entitled to a time extension or compensation for a non-excusable delay.

E. Concurrent Delays. Concurrent delays are separate delays to critical activities occurring at the same time. When a non-excusable delay is concurrent with an excusable delay, the Contractor is not entitled to a time extension for the period the non-excusable delay is concurrent with the excusable delay. When a non-compensable delay is concurrent with a compensable delay, the Contractor is entitled to a time extension but not entitled to compensation for the period the non-compensable delay is concurrent with the compensable delay.

F. Notification of Delay. In addition to the notice requirements of 103.02.(G), the Contractor shall provide the following detailed information when giving notice of a delay:

a) A detailed description of the events causing delay.
b) The identification of the party(ies) responsible for the delay and the Contractual basis for this determination.
c) Activities in the current Progress schedule affected by the delay.
d) The magnitude of the delay, whether known or forecast, using the current Progress Schedule update as a basis for this determination.

G. Record Keeping. After notifying the Engineer of the delay, Contractor shall keep daily records of the labor, material, and equipment affected by the delay as specified in 108.04.The Contractor shall maintain a daily record of each operation affected by the delay and the station location(s) of the operations affected. Daily records of the operations and stations will also be maintained by the Department. Daily records shall contain the following information:

1. Number of days behind schedule.
2. A summary of all operations that have been delayed, or will be delayed.
3. In the case of a compensable delay, the Contractor shall explain how the Department's act or omission delayed each operation, and estimate the amount of time required to complete the Project.
4. Itemize all extra costs being incurred, including:

    a) How the extra costs relate to the delay and how they are being calculated and measured;
    b) The identification of all non-salaried Project employees for whom costs are being compiled; and
    c) A summary of time charges for equipment, identified by manufacturer's number for which costs are being compiled.

Provide written notice to the Engineer for comparison and define any disagreements between specific records.

Failure to meet to review the Department's records or to report disagreements between the records shall establish that that the Department's records are accurate and that the Contractor agrees that the Department's records will be the basis for determining the delay and any compensation that may be due as a result of the delay. The Contractor waives entitlement to a time extension or compensation for delay incurred prior to notifying the Engineer that operations have been delayed. Delay costs allegedly incurred prior to notifying the Contract Administrator that operations have been delayed will not be allowed.

107.09 Failure to Complete on Time.

For each day, as specified, that any work shall remain uncompleted after the contract time specified for the completion of parts, phases, stages or the complete work, the sum of two hundred dollars ($200.00) per day for each calendar day (Sundays and Holidays excluded) of delay will be deducted from any money due the Contractor, not as a penalty, but as liquidated damages for each day of such delay, to be paid in full and subject to no deduction. If the payments due the Contractor are less than the amount of such liquidated damages, said damages shall be deducted from any other monies due or to become due the Contractor and in case such damages shall exceed the amount of all moneys due or to become due the Contractor, then the Contractor or his surety shall pay the balance to the City.

In the case of a date in the contract being given for the completion of parts, phases or stages, the liquidated damages will be deducted during the period in which the particular work specified is uncompleted.

Permitting the Contractor to continue and finish the work or any part of it after the time fixed for its completion may have been extended, will in no way operate as a waiver on the part of the Department of any of its rights under the contract.

The Engineer may waive such portions of the liquidated damages as may accrue after the work is in condition for safe and convenient use by the traveling public.

If the contract is not completed within the time specified and no extension of time is authorized by the Department, the Contractor shall indemnify the City for costs to the City of inspection of the work during any such extension period.

107.10 Default of Contract.

The Engineer may declare the Contract in default to the Contractor and the Surety advising them of the actions required for remedy if the Contractor:
(a) Fails to begin the work under the contract within the time specified in the Notice to Proceed, or

(b) Fails to perform the work with sufficient workers and equipment or with sufficient materials to assure the prompt completion of said work, or

(c) Fails to perform the work in accordance with the contract requirements or refuses to remove and replace rejected materials or unacceptable work, or

(d) Discontinues the prosecution of the work, or

(e) Fails to resume work which has been discontinued, within a reasonable time after notice to do so, or

(f) Becomes insolvent or is declared bankrupt, or commits any act of bankruptcy or insolvency, allows any final judgment to remain unsatisfied for a period of ten days, or

(g) Makes an assignment for the benefit of creditor, or

(h) Fails to comply with contract requirements regarding minimum wage payments or EEO requirements, or

(i) Is a party to fraud.

The Engineer will give notice in writing to the Contractor and his Surety of such delay, neglect or default.

If the Contractor or Surety, within 10 calendar days after such notice, does not proceed in accordance with the notice, then the Director will, upon written notification from the Engineer of the Contractor's failure to comply with such notice, have full power and authority without violating the contract, to take the prosecution of the work out of the hands of the Contractor. The Department may enter into an agreement for the completion of said contract according to the terms and provisions thereof, or use such other methods as will be required for the completion of said contract in an acceptable manner.

All extra costs and charges incurred by the Department as a result of such delay, neglect or default, together with the cost of completing the work under contract, will be deducted from any monies due or which may become due said Contractor. If such expense exceeds the sum which would have been payable under the contract, then the Contractor and the Surety shall be liable and shall pay to the Department the amount of excess.

107.11 Termination of Contractor's Responsibility.

Whenever the improvement provided for by the contract shall have been completely performed on the part of the Contractor and all parts of the work have been approved and accepted, the Contractor shall then be released from further obligations except as set forth in his bond and as provided in 107.12.

107.12 Guaranty.

The Contractor guarantees that the work to be done under this contract, and the materials to be furnished by him for use in the construction of the same, will be free from defects or flaws. This guaranty shall be for a period of one year from and after the date of acceptance.

It is hereby, however, specially agreed and understood that this guaranty shall not include any repairs made necessary by any cause or causes other than defective work or materials furnished by the Contractor. The Contractor shall at all times within said period of guaranty keep the surface of the ground over this work, or adjacent thereto, in the position and condition required by this contract, and refill any settlement or erosion in the backfilling or any surface graded by him, due to any cause whatsoever, when so directed by the Engineer. Should he fail to do so, the Department may have said work done as described in 107.10

107.13 Understanding of Parties Regarding Department's Performance.

It is understood and agreed by the parties to the contract that all obligations of the Department hereunder, including the continuance of payments, are contingent upon the appropriation and continued availability of funds, and in no event shall the Department be liable for any payments hereunder in excess of such appropriation and available funds. In the event the Board of Mayor and Aldermen orders the reduction of expenditures of funds and the Board of Mayor and Aldermen fails to encumber funds or reduces or terminates the expenditure of anticipated funds or appropriations relative to the contract, the Director may, by written notice to the Contractor, immediately terminate the contract in whole or in part in accordance with the applicable provisions of 107.11.

SECTION 108 -- MEASUREMENT AND PAYMENT

108.01 Measurement of Quantities.

All work completed under the Contract will be measured according to United States customary unit of measure.

A station when used as a definition or term of measurement will be 100 linear feet measured horizontally.

The method of measurement and computations to be used in determination of quantities of material furnished and of work performed under the Contract will be those methods generally recognized as conforming to good engineering practice.

Unless otherwise specified, longitudinal measurements for area computations will be made horizontally, and no deductions will be made for individual fixtures having an area of 9 square feet or less. Unless otherwise specified, transverse measurements for area computations will be the neat dimensions shown on the plans or ordered in writing.

Structures will be measured according to neat lines shown on the plans or as ordered to fit field conditions.

All items which are measured by the linear foot, such as pipe culverts, guardrail, underdrains and the like, will be measured parallel to the base or foundation upon which such structures are placed.

In computing major volumes of excavation, embankment and borrow, the average end area method will be used. Where it is impracticable to measure material by the cross-section method due to irregular, isolated deposits, acceptable methods involving three-dimensional measurement may be used. When measurement of materials in vehicles is permitted, the quantity will be determined as 80 percent of the loose volume.

In computing volumes of concrete and masonry, the prismoidal method will be used.

The space occupied by pipe will not be included in the volume of headwalls. In the case of pipe having a wall thickness of 2 inches or more, the area of the pipe will be based on the manufacturer's nominal dimensions, outside to outside, or the shell of the pipe. In the case of pipe having a wall thickness of less than 2 inches, the area of the pipe will be based on the nominal inside diameter of the pipe.

The term "ton" will mean the short ton consisting of 2,000 pounds avoirdupois. Except as specified below, all materials which are measured or proportioned by weight shall be weighed on scales which the Contractor has had sealed by the New Hampshire Department of Agriculture or by a company approved by that Department. All weighing shall be performed in a manner prescribed under the Rules and Regulations of the Bureau of Weights and Measures of the New Hampshire Department of Agriculture.

Weighing of materials on scales located outside New Hampshire will be permitted for materials produced or stored outside the state, when requested by the Contractor. Out of state weighing, in order to be approved, must be performed on scales sealed by the appropriate governmental authority.

Each truck used to haul material being paid for by weight shall bear a plainly legible identification mark and, if required, shall be weighed empty daily at such times as directed.

When material is weighed, the individual weight slips, which shall be furnished by the Contractor, for trucks, trailers or distributors, shall show the following information: the date, the project name and number; slip number; the material or commodity; the dealer or vendor; the Contractor or subcontractor; the location of the scales; the time of loading; the vehicle registration number or other approved legible identification mark; the tare and net weights, with gross weights when applicable; and the weigher's signature or his signed initials.

The right is reserved to weigh any truck, trailer or distributor, at locations designated, before and after making deliveries to the project.

Bituminous materials will be measured by the gallon or ton. When necessary, volumes will be converted to weights, or weights will be converted to gallons, corrected to 60 degrees F, using ASTM D 1250 for asphalts and ASTM D 633 for tars.

To assist in computing the number of tons of material required when the rate of application is specified in gallons per square yard, the following approximations may be used:

Table 108- 1
Approximate Conversion Factors for Bituminous Materials

Bitumen	Gallons per Ton at 60 degrees F	Pounds per Gallon at 60 degrees F
RC-MC 70	248	8.05
RC-MC 250	247	8.11
RC-MC 800	244	8.18
RC-MC 3000	240	8.33
Emulsion	238	8.38

Each vehicle used in transporting liquid bituminous material shall be weighed before and after loading and the difference in the weights used as the basis for computing pay quantities. A copy of the original weight slip shall be delivered with each truck shipment. In addition to the information required above, the following shall be shown on the slip: the plant and tank number from which the material was obtained, the grade of the material and the percent of additive, if any.

When a slip shows a "Part Load On" or indicates a "high tare", the delivery slip shall be accompanied by a copy of the delivery or weight slip from the previous load indicating the grade of material therein together with substantiation of the tare weight of the vehicle. If the Engineer has already been furnished the slip with the previous load, reference by slip number will satisfy the latter part of this requirement.

Liquid bituminous material delivered but not used in the work shall be weighed and credit given by the vendor. A copy of the weight slip showing such credit shall be returned to the Engineer within 3 calendar days.

When material is specified to be measured by the cubic yard but measurement by weight is approved, such material may be weighed and the weight converted to cubic yards for payment purposes. Necessary conversion factors will be determined by the Engineer.

Timber will be measured by the thousand feet board measure (MBM) actually incorporated in the structure. Measurement will be based on nominal widths, thicknesses and the extreme length of each piece.

The term "lump sum" when used as an item of payment will mean complete payment for the work described in the item.

When a complete structure or structural unit (in effect "lump sum" work) is specified as the unit of measurement, the unit will be constructed to include all necessary fittings and accessories.

Except as may be otherwise provided, partial payments for lump sum items will be made approximately in proportion to the amount of the work completed on those items.

The thickness of plates and galvanized sheets used in the manufacture of corrugated metal pipe, metal plate pipe culverts and arches, and metal cribbing will be specified and measured in decimal fractions of inches.

When standard manufactured items such as fence, wire, plates, rolled shapes, pipe and conduit are identified by gauge, unit weight, section dimensions and the like, such identification will be considered to be nominal weights or dimensions. Unless more stringently controlled by tolerances in cited specifications, manufacturing tolerances established by the industries involved will be accepted.

Material wasted without authority will not be included in the final estimate.

108.02 Scope of Payment.

The Contractor shall receive and accept compensation provided for in the Contract as full payment for everything furnished and done by the Contractor under the Contract including all work required, but not specifically mentioned, and also for all loss or damage arising out of the nature of the work aforesaid, or from the action of the elements, or from any unforeseen obstruction or difficulty encountered in the prosecution of the work and for all risks of every description connected with the Work and for all expenses incurred by or in consequence of the suspension or discontinuance of the Work as herein specified, and for well and faithfully completing the Work and the whole thereof.

The Contractor shall be liable to the City for failure to repair, correct, renew or replace at his own cost and expense, all damage due or attributable to defects or imperfections in the construction, which defects or imperfections may be discovered before or at the time of the final inspection and acceptance of the work.

No moneys, payable under the Contract or any part thereof, except the estimate for the first month or period, shall become due and payable, if the Director so elects, until the Contractor shall satisfy the Director that he has fully settled or paid for all labor performed or furnished, for all equipment hired, including trucks, for all materials used, and for fuels, lubricants, power, tools, hardware and supplies purchased by the Contractor and used in carrying out said Contract and for labor and parts furnished upon the order of said Contractor for the repair of equipment used in carrying out said Contract; and the Director, if he so elects, may pay any and all such bills, in whole or in part, and deduct the amount so paid from any monthly or final estimate, excepting the first estimate.

108.03 Compensation for Altered Quantities.

Except as provided for under the particular Contract item, when the accepted quantities of work vary from the quantities in the bid schedule, the Contractor shall accept as payment in full, so far as Contract items are concerned, payment at the original Contract unit prices for the accepted quantities of work done. No allowance will be made for any increased expense, loss of expected reimbursement or loss of anticipated profits suffered or claimed by the Contractor resulting either directly from such alterations or indirectly from unbalanced allocation among the Contract items of overhead expense on the part of the Bidder and subsequent loss of expected reimbursements from any other cause.

108.04 Extra Work, Payment for Revisions to the Contract.

108.04.1 General. If the Department revises the Contract as provided in 103.02, the Department will pay for the revision following the sequence specified in 108.04.2 and/or 108.04.3. Such payment will include compensation for performing the revised work, delay costs, and all other costs not expressly precluded by 108.04.5.

If a Contract Revision includes a time extension for compensable delays as provided by 107.08, the Department will pay the costs associated with time extension in accordance with 108.04.6.

108.04.2 Contract Pay Item. Before proceeding to another pricing method, the Engineer will attempt to price and pay for revised work using Item Bid Price.

108.04.3 Negotiated Prices. If the Engineer and Contractor cannot agree on compensation in accordance with 108.04.2 they will negotiate the price of a Contract Revision.

When determining a negotiated price, the Contractor shall first provide an estimate of the proposed unit prices or lump sum price for the Contract Revision to the Engineer. The Engineer may request that the Contractor justify the estimate by providing one or more of the following items:

1. Labor requirements by trade in hours for each task.
2. Equipment costs and time requirements.
3. Material costs.

The Contractor shall provide the justification within 5 working days after the Department's request. The Department will respond to the estimate within 5 working days after receipt of the Contractor's justification. The Department and the Contractor can mutually agree to extend these 5-day requirements.

108.04.4 Force Account

108.04.4.1 General. If the Department and the Contractor cannot agree on a negotiated price for the Contract Revision, the Engineer may direct the Contractor to perform all or part of the revised work in accordance with 108.04.4.2through 108.04.4.5.

When directed to perform work on a force account basis the Department will pay the Contractor as specified in 108.04.4.2 through 108.04.4.6, as full compensation for performing the force account work, including delay costs, and all other associated costs. The Contractor shall submit a written proposal for the work, including the planned equipment, materials, labor, and work schedule.

108.04.4.2 Labor. For all labor, including equipment operators, and foremen in direct charge of the specific operation, the Contractor shall receive the rate of wage agreed upon in writing for each and every hour that said labor is actually engaged in such work. When the Contractor is ordered to return to the project solely to perform Force Account work, labor will be considered as being actually engaged in the work during the hours paid for while travelling.

No part of the salary or expenses of anyone connected with the Contractor's forces above the grade of foreman and having general supervision of the work will be included in the labor item as specified above, except under the following conditions: (1) The work

ordered is of an emergency nature or is ordered too late to be done before all work shown on the plans or provided for in the proposal has been substantially accomplished, (2) the Contractor's organization is entirely occupied with Force Account work, and (3) the nature of the work is such that the services of superintendents and timekeepers may be included in the classification of labor. Trimming of trees will not be considered as requiring a superintendent or timekeeper. In order to determine the allowable rate of pay of eligible superintendents, foremen and timekeepers, a notarized statement shall be furnished to the Engineer. In case no documentary evidence of the actual rate of pay is furnished for such superintendents, foremen and timekeepers, no reimbursement will be allowed. Transportation for a superintendent will be paid for as equipment in the manner specified in (c) below.

When such benefits are required by collective bargaining or other employment contract generally applicable to the classes of labor employed on the work, the Contractor will receive the actual costs paid to, or in behalf of workmen by reason of health and welfare benefits, pension fund benefits, or other benefits. In case the Contractor is required to pay overtime pay or holiday pay to labor engaged in the work, such rate will be the rate reimbursed.

An amount equal to 45 percent of the sum of the above items will also be paid the Contractor, which added amount shall constitute payment for such items, among others, as property damage, liability, and workmen's compensation insurance premiums, unemployment insurance contributions, and social security taxes on the work.

Subsistence and travel expenses paid by the Contractor will be reimbursed only when the Engineer orders Force Account work and in order to perform such work it is necessary to move workmen to the project particularly for that operation. Such subsistence and travel expenses allowed shall be carried on the daily report form under the classification of "Material", without, however, being subject to the added percentage for materials. If other work than such Force Account work is performed by the individuals during or in connection with that operation, no subsistence or travel expenses will be allowed.

108.04.4.3 Materials When the Engineer directs special work requiring skills, tools and equipment unlike those used by the Contractor or his authorized subcontractors, payment may be made for such work performed by a specialist. For such specialist services, and for materials incorporated in the work, whether furnished by a specialist or by the Contractor, the Contractor will receive the cost, including transportation charges paid by him, to which cost will be added 15 percent of the sum thereof. Invoices for specialist services on the basis of the current market price thereof may be accepted without complete itemization of labor, material and equipment rental costs when it is impracticable and not in accordance with the established practice of the special service industry to provide such complete itemization.

In those instances wherein a Contractor is required to perform Force Account work necessitating a fabrication or machining process in a fabrication or machine shop facility

away from the job site, the charges for that portion of such work performed in such facility may, by agreement, be accepted as a specialist billing.

The cost of materials will be the cost to the purchaser, whether Contractor, subcontractor or other, from the supplier thereof, except as the following are applicable:

1. If materials are procured by the purchaser by any method which is not a direct purchase from and a direct billing by the actual supplier to such purchaser, the cost of such materials will be deemed to be the price paid to the actual supplier as determined by the Engineer. No markup except for actual costs incurred in the handling of such materials will be permitted.

2. If the materials are obtained from a supply or source owned wholly or in part by the purchaser, payment therefor will not exceed the price paid by the purchaser for similar materials furnished from said source on Contract items or the current wholesale price for such materials delivered to the job site, whichever price is lower.

3. If, in the opinion of the Engineer, the cost of such materials is excessive, then the cost of such material will be deemed to be the lowest current wholesale price at which such materials are available in the quantities concerned delivered to the job site.

4. If the Contractor does not furnish satisfactory evidence of the cost of such materials from the actual supplier thereof, the cost will then be determined in accordance with paragraph (3).

108.04.4.4 Equipment. For any machinery or special equipment (other than small tools) the use of which has been authorized, the Contractor will receive the rental charge agreed upon for the time that such equipment is doing actual work and used exclusively for the Force Account work. This rental charge shall include the cost of all fuel, oil, lubrication, supplies, necessary attachments, repairs and maintenance of any kind, depreciation, storage, insurance, small tools and all incidentals. The rental charge shall not exceed the rate published by Dataquest, Incorporated, for such equipment in the edition of the "Rental Rate Blue Book for Construction Equipment" current at the beginning of the calendar year in which the Force Account work is being performed. Revised sections published during the year will not be incorporated in the "Blue Book" until the beginning of the next calendar year. The area adjustment percentage will be reviewed and revised as necessary subsequent to the revision of the "Blue Book" sections. If it is deemed necessary by the Engineer to use equipment not listed in the above publication, a suitable rental rate for such equipment will be established by the Engineer. The Contractor may furnish any cost data which might assist the Engineer in the establishment of such rental rate.

The Contractor shall provide the Engineer with the following: the manufacturer's name, equipment type, year of manufacture, model number, type of fuel used, horsepower rating, attachments required, together with their size or capacity, and any further

information necessary to ascertain the proper rate. The Contractor shall have available for the Engineer's use a revised copy of the "Blue Book" as referenced in (c) above.

Equipment used by the Contractor shall be in good working condition and shall be of suitable size and suitable capacity required for the work to be performed. The rate of the basic equipment with the appropriate attachments shall include only the rate for the combined equipment necessary to perform the Force Account work. In case the Contractor elects to use equipment of a higher rental value than that suitable for the work, payment will be made at the rate applicable to the suitable equipment. The equipment actually used and the suitable equipment to paid for will be recorded as a part of the record for Force Account work. The Engineer will determine the suitability of the equipment. If there is a differential in the rate of pay of the operator of oversize or higher rate equipment, the rate paid for the operator will likewise be that for the suitable equipment.

Unless otherwise specified, manufacturer's ratings and manufacturer approved modifications shall be used to classify equipment for the determination of applicable rental rates. Equipment which has no direct power unit shall be powered by a unit of at least the minimum rating recommended by the manufacturer.

Rental time will not be allowed while equipment is inoperative due to breakdowns.

The maximum rental period to be paid for per day shall not exceed 8 hours unless the equipment is in operation for a longer time with the approval of the Engineer.

The hourly equipment rental rate (R) will be determined as follows:

$$R = (A \times B \times C) + D$$

Where A = Blue Book monthly rate divided by 176
B = Blue Book regional adjustment factor for New Hampshire plus 100%.
C = Factor from Rate Adjustment Table for the year of equipment manufacture.
D = Blue Book Estimated operating costs per hour.

When no work but Force Account work is performed by equipment which must be moved to the Work and used, payment for loading, transporting and unloading equipment will be made under the following conditions:

1. The original location of the equipment to be hauled to the location of the work shall be agreed to in advance.

2. Should the Contractor desire the return of the equipment to a location other than its original location, the Department will pay the cost of transportation, provided such payment shall not exceed the cost of moving the equipment to the work.

The rental time to be paid for equipment already on the work shall be the time the equipment is in operation on the Force Account work being performed and, in addition, shall include the time required to move the equipment to the location of such work and return it to the original location or to another location requiring no more time than that required to return it to its original location, except that moving time will not be paid for if the equipment is used during the move on work other than Force Account work. Loading and transporting cost will be allowed, in lieu of moving time, when the equipment is moved by means other than its own power, except that no payment will be made if the equipment is used during the move on work other than Force Account work.

108.04.4.5 Miscellaneous. No additional allowance will be made for general superintendence, the use of small tools, or for other costs for which no specific allowance is herein provided.

108.04.4.6 Subcontracting. For administration costs in connection with approved subcontract work, the Contractor shall receive an amount equal to five percent of the total cost of work computed as set forth above to compensate for overhead, profit and other costs, except that no percentage will be allowed for equipment rented from the Contractor**.**

108.04.4.7 Compensation. The compensation herein provided shall be accepted by the Contractor as payment in full for Force Account work, including superintendence (except as provided in (a) above), subcontracting, taxes, bond, overhead, profit and other costs in connection therewith which are not provided for herein**.**

108.04.4.8 Statements. The Contractor's representative and the Engineer each day shall compare records of work done as ordered on forms provided by the Engineer and shall thereafter be considered to be the basis for payment of the work performed, but shall not preclude subsequent adjustment based on a later audit by the Department.

Such records shall show the following:

1. Name of subcontractor, if appropriate.
2. Name, classification, date, daily hours, total hours, rate and extension for each laborer, operator and foreman.
3. Quantities of materials, prices and extensions.
4. Charges for transportation of materials.
5. Specialists' charges.
6. Designation, dates, daily hours, rental rate and extension for each unit of machinery and equipment.

The Contractor shall certify that the labor, materials and equipment listed were actually used on the Force Account work described, that the labor and equipment were used for the hours indicated and that the rates for labor do not exceed those for comparable labor currently employed on the project.

Statements shall be accompanied or followed by certified copies of the appropriate payrolls. Statements shall be supported by receipted bills or acceptable invoices for the cost of all materials used and for transportation and specialists' charges. However, in the case of materials, if materials used on the Force Account work are not specifically purchased for such work but are taken from the Contractor's stock, then in lieu of the invoices, the Contractor shall furnish an affidavit certifying that such materials were taken from his stock, that the quantity claimed was actually used and that the price and transportation claimed represent the actual cost to the Contractor.

During the life of the Contract and for a period of not less than 3 years after the date of acceptance thereof, the Contractor's cost records pertaining to work paid for on an Force Account work basis shall be open to inspection or audit by representatives of the Department, and the Contractor shall retain such records for that period. Where payment for materials or labor is based on the cost thereof to forces other than the Contractor, the Contractor shall make every reasonable effort to insure that the cost records of such other forces will be open to inspection and audit by representatives of the Department on the same terms and conditions as the cost records of the Contractor.

108.04.5 Non –Allowable Charges

Whether payments for Contract Revisions are based on negotiated unit prices, agreed lump sum prices, negotiated prices, or force account, the Department will not reimburse the Contractor for the following:

1. Home office overhead or profit in excess of that specified in 108.04.2 through 108.04.5.
2. Loss of anticipated profit.
3. Consequential damages, including loss of bonding capacity, loss of bidding opportunities, and insolvency.
4. Indirect costs.
5. Attorneys fees, claims preparation expenses, or costs of litigation.
6. Interest.

108.04.6 Compensation for Delay

108.04.6.1 General. For a compensable delay as identified in 107.08.C, the Department will pay for the costs specified in 108.04.6.2. The Department will not pay for non-allowable charges specified in 108.04.5, nor duplicate payment made under 108.04.2through 108.04.4. The Department will make no payment for delay costs before the Contractor submits an itemized statement of those costs**.**

108.04.6.2 Allowable Delay Costs.

108.04.6.2.1 Extended Field Office Overhead. The Department will pay the Contractor for extended field office overhead costs that include costs for general field supervision.

Compute these labor costs as specified in 108.04.4.2. For salaried personnel, calculate the daily wage rate actually paid by dividing the weekly salary by 5 days per week.

108.04.6.2.2 Idle Labor. Compute labor costs during delays as specified in 108.04.4.2 for all non-salaried personnel remaining on the project as required under collective bargaining agreements or for other Engineer-approved reasons**.**

108.04.6.2.3 Idle Equipment or Equipment Demobilization. The Department will pay the Contractor the idle equipment rate calculated in 108.04.4.4for equipment, other than small tools, that must remain on the project during Department-caused delays. The Department will pay the Contractor's transportation costs to remove and return equipment not required on the project during delays.

108.04.6.2.4 Materials Escalation or Material Storage. The Department will pay the Contractor for increased material costs or material storage costs due to the Department-caused delay. Obtain the Engineer's approval before storing material due to a delay**.**

108.05 Eliminated Items.

Should any items contained in the Contract be found unnecessary for the proper completion of the work, the Engineer may eliminate such items from the Contract and such action shall in no way invalidate the Contract. When notified of the elimination of items, the Contractor will be reimbursed for actual work done and all costs incurred, including mobilization of materials prior to said notification.

108.06 Partial Payments.

The Engineer shall, by the twenty-fifth day of each month, make an approximate estimate, such as he shall believe to be just and fair, of the amount and value of the work done and the materials incorporated into the work during the calendar month. Payment may at any time be withheld if the work is not proceeding in accordance with the Contract. Upon such estimate being made and certified by the Engineer, the City will pay to the Contractor ninety (90) percent of the amount stated in such estimate or certificate by the 20th of the following month, but the City may, at all times, reserve and retain, out of any or all partial payments, all such sums as it is authorized to reserve or retain. The making of any such estimates or payment therein shall not be taken or construed as an approval or acceptance by the City of any work so estimated. All such payments shall be considered tentative only, subject to correction in the final estimate and need not be based upon an accurate measurement.

The Contractor shall be responsible for any loss or damage to any such material or equipment until the same has been completely installed, tested and accepted.

The Contractor shall pay for all transportation and utility services not later than the twentieth day of the calendar month following that in which such services are rendered.

The Contractor shall pay for all materials, tools and other expendable equipment to the extent of ninety percent of the cost thereof, not later than the twentieth day of the calendar month following that in which such materials, tools and equipment are delivered to the site of the project and the balance of the cost thereof not later than the thirtieth day following the completion of that part of the work in or on which such materials, tools and equipment are incorporated or used.

The Contractor shall from time to time, as required by the Engineer, furnish the Engineer with affidavits and satisfactory evidence that all persons who have done work or furnished materials under the Contract, or have suffered damage on account of the Contractor's operations, have been fully paid or secured; and in case such evidence be not furnished as aforesaid, such amount as the Engineer may consider necessary to meet the lawful claims of the persons aforesaid will be retained from the monies otherwise due the Contractor, until the liabilities aforesaid have been fully satisfied. It is understood and agreed, however, that the City hereby assumes no obligation toward such claimants, nor in any way undertakes to pay such claims out of any funds due or that may become due the Contractor, or out of its own funds.

If the Contractor claims compensation for any damages sustained by breach of contract or otherwise, be the same based on claims that are due and full credit has not been given the Contractor for work performed or material furnished in accordance with the terms of the Contract or for any other cause, he shall promptly, after sustaining any such damage, make a written statement of the nature of the damage sustained, to the Engineer, and shall on or before the fifteenth day of the month following that in which the damage shall have been sustained, file with the Engineer an itemized statement of the details and amount of such damage, and unless such statement is made as thus required, his claim for compensation shall be forfeited and invalidated, and he shall not be entitled to payment on account of any such damage.

The City may keep any monies which would otherwise be payable at any time hereunder and apply the same, or so much as may be necessary therefore, to the payment of any expenses, losses or damages, incurred by the City and determined as herein provided, and may retain, until all claims are settled, so much of such money as the City shall be of the opinion will be required to settle all claims filed with the City, its officers and agents, relating to the Contract.

108.07 Payment for Material on Hand.

Partial payments may be made to the extent of the delivered cost of materials to be incorporated in the work, provided the materials meet the requirements of the plans and specifications when delivered in the vicinity of the project. In any event, partial payment for materials on hand shall not exceed 90 percent of the bid price.

Payment for materials on hand will not constitute acceptance and any faulty material will be rejected even though previous payment may have been made. The Contractor shall be solely responsible for furnishing and incorporating acceptable materials into the work and for any material on which partial payment has been made.

108.08 Payment for Material Not on Hand.

Payment will be based on the actual cost to the Contractor as indicated on invoices furnished to the Engineer. Notarized copies of paid invoices for all involved material payments allowed on the estimate must be submitted to the Engineer within 30 calendar days of the date of the estimate on which material allowance was made or such material allowance will be deducted from subsequent estimates until such notices have been furnished or until the materials are on hand. Payment shall not exceed 90 percent of the bid price. No payment will be made on materials for any item in the Contract whose total dollar value is less than $5,000. Such payment will not constitute acceptance and any faulty material will be rejected even though previous payment may have been made. The Contractor shall be solely responsible for furnishing and incorporating acceptable materials into the work for any material on which partial payment has been made and for any loss of or damage to such materials regardless of the cause.

108.09 Semi-final and Final Payments.

Within 65 days after the work has been completed to the satisfaction of the Engineer, he will make a final estimate of the amount of work done by the Contractor and of the value thereof. Such final estimate shall include the value of all work performed under the Contract and all retained percentage, after deducting therefrom the total of all previous periodic or partial payments and all amounts to be retained to satisfy any and all outstanding claims or liens that have been duly filed against the Contractor. All prior estimates shall be subject to correction by this final estimate. After preparation, a copy of the final estimate shall be submitted to the Contractor for his approval and agreement.

If, after final inspection has been made, there are any payment or Extra Work items that are in dispute, either as to the quantity or value of the work performed hereunder, such items or claims may be excluded from the final estimate and payment for such disputed items may be deferred until such time as an agreement has been reached between the Contractor and the City or until such time as the claim has been adjudicated. In such cases, a semi-final estimate should be prepared within the said period of 65 days after completion, covering the value of all work performed and all retained percentage on all items of the Contract that are not in dispute but subject to the same deductions and retainage as set forth above and with all disputed items or claims excluded.

In the event that the work has been substantially completed and the project has been opened to public use by order of the Owner or its duly authorized agents, but final acceptance of the work is subject to delay because of minor uncompleted items which do not impair the usefulness of the project, a semi-final estimate shall be prepared within a like period of 65 days after such contract has been substantially completed and placed in public use. Such semi- final estimate shall include an estimate of value of all work performed in accordance with the terms of the Contract, including the amount of retained percentage withheld from previous partial payments but excluding the same deductions and retainage as set forth above; an estimate of the value of the work remaining to be performed and any items of work that may be in dispute. Payment for such excluded items or portions thereof may be deferred until such time as the remaining work has

been satisfactorily completed, or in the case of disputed items or claims, until such time as an agreement has been reached.

Such final or semi-final estimates, however, shall not serve as a release of the Contractor or of his sureties from the required guarantee against defects of materials, workmanship and/or over Contract performance for a period of one (1) year from the date of acceptance.

CITY OF MANCHESTER
DEPARTMENT OF PUBLIC WORKS

PART II – TECHNICAL SPECIFICATIONS

DIVISION 200 – EARTHWORK

SECTION 201 - CLEARING AND GRUBBING

Description

1.1 This work shall consist of clearing, grubbing, removing, and disposing of all vegetation and debris within the limits shown on the plans or specified below, except such objects as are designated to remain or are to be removed in accordance with other sections of these specifications. This work shall also include the preservation from injury or defacement of all vegetation and objects designated to remain.

1.2 Areas which will be approved under clearing and grubbing, outside of the limits shown on the plans for clearing and grubbing will be those where the wooded growth is considered by the Engineer to be comparable to that existing in the designated areas and where full-scale clearing and grubbing operations are required. Areas of only scattered small growth, grass, weeds, crops, or occasional small roots may require some work but will not be included for payment under this item.

1.3 The items of trees, stumps, and roadside clean up will be limited to work performed outside of the areas designated under 1.1 and 1.2.

1.4 Definitions

a) **Clearing.** Cutting, removing and disposing of all trees, logs, brush, debris and vegetation within a designated area.
b) **Grubbing.** Removing and disposing of all stumps and roots within a designated area.
c) **Large Tree**. Tree measuring in circumference 75 inches and greater at a point 4 ft above the average ground.
d) **Small Tree** Tree measuring in circumference less than 75 inches but more than 28 inches at a point 4 ft above the average ground.
e) **Brush.** Area of growth including grass, weeds, crops and trees measuring in circumference 28 in or less at a point 4 ft above the average ground.

Construction Requirements

2.1 Clearing and Grubbing, Trees, and Stumps.

2.1.1 No trees shall be cut until designated by the Engineer. Particular reference is made to fruit, ornamental, or shade trees or plants at the edge of the roadside slopes. Cut or scarred surfaces of trees or shrubs selected for retention shall be painted with an approved wound dressing or treated according to other accepted arboricultural practices.

2.1.1.1 The Contractor usually is required to file an intent to cut and will pay all charges, fees and taxes as may be required under Chapter 79 of the RSA.

2.1.2 All trees ordered cut shall become the property of, and shall be disposed of by the Contractor, except as provided hereinafter. In the interest of energy and material

conservation, the Contractor shall salvage wood from cut trees in accordance with standard commercial logging practices.

2.1.3 Unless otherwise shown on the plans, clearing and grubbing shall extend 10 feet beyond the excavation and 5 feet beyond embankment slopes.

2.1.4 The Contractor shall perform the work of clearing and grubbing to include the removal of only the materials here specified. In order to conserve topsoil, the Contractor shall make use of rake teeth on bulldozers in the process of removing stumps and brush unless other equipment is permitted.

2.1.5 Except in areas to be excavated, excavation caused by grubbing operations shall be filled with suitable material which shall be compacted to conform to the surrounding ground.

2.1.6 All stumps and large roots within the limits of the roadbed shall be completely removed to a depth of 3 feet below subgrade unless a greater or lesser depth is specified on the plans. Stumps within the limits of the roadbed below such depth, and stumps under embankments or outside the roadbed shall be cut off within 6 inches of the existing ground surface except in the area to be rounded at the top of backslopes, where stumps are to be cut off flush with the surface of the final slope line, or removed.

2.1.6.1 When stumps are designated to be removed by grinding, the Contractor shall use an approved stump-grinding machine such that no damage occurs to surrounding structures.

2.1.7 All stumps, roots, branches, brush, weeds, and other perishable material resulting from the clearing and grubbing operations shall be disposed of by an approved method. The Contractor's attention is directed to RSA 149-M regarding the fact that stumps and roots from grubbing operations have been classified as solid waste. As such, these stumps shall be disposed of in permitted sites, through firms having facilities to convert the stumps to marketable products or by grinding or chipping. Permits for sites are obtained from the N. H. Department of Environmental Services, Division of Waste Management. It is the responsibility of the person disposing of the stumps to obtain all the necessary permits and comply with the New Hampshire Solid Waste Rules and Design Standards in effect at the time of disposal.

2.1.7.1 All wood less than 5 inches in diameter and not cut into 4 foot lengths for firewood shall be chipped. Burying of brush shall not be permitted. Stumps, roots and rotten wood may be buried at approved sites on or off the project. Approved sites shall have a minimum of 24 inches of cover material and shall be graded and shaped as directed by the Engineer. If burial is to be on private land, the agreements as to how the area is to be left shall be set forth on the forms provided by the Department in accordance with 105.10 disposal areas. Three signed copies of the agreements shall be furnished to the Engineer. Approval of the proposed disposal area will be contingent upon agreement by the Contractor and the property owner to leave the area in such shape that it will blend with the surrounding terrain and that erosion will be kept to the minimum. Without

special permission, slopes shall not be left steeper than 3:1. No disposal area shall be left in such condition that erosion, after completion of the work, might result in water pollution by silt or other deleterious substances. Areas shall be left in such shape and condition that material will not wash and block or obstruct drainage ways. If holes caused by settlement appear, they shall be filled as directed. A release from the property owner is required prior to final acceptance.

2.1.7.2 Except in the case where wood is piled neatly for future use, storage locations should be outside the limits of view from the project, other highways, and residences.

2.1.7.3 When ordered, available chipped material shall be stockpiled in the quantity directed to be used for erosion control. The Contractor may market any remaining chips or dispose of them by other approved methods.

2.1.7.4 Unless otherwise ordered, disposal areas shall be covered with material capable of supporting vegetation and either fertilized and seeded with grass seed or planted with seedlings. Seedlings shall be set out in accordance with accepted horticultural practices as directed in the agreement.

2.1.7.5 Unless permission is given to preserve access roads to disposal areas adjacent to highways, such access roads shall be obliterated.

2.1.8 When fence lines go through wooded areas, a strip three feet wide shall be cleared for the fence line.

2.2 Roadside Cleanup.

2.2.1 Roadside cleanup of leaning, dead, unsound and unsightly trees, branches, stubs, refuse, and slash, generally to a limit of approximately 15 feet outside the limits specified in 2.1.3 above, shall be performed where and as directed, and the material shall be disposed of as provided in 2.1. All tree trimming in connection with roadside cleanup shall be done by competent workmen in accordance with good tree surgery practice.

2.3 Trimming of Trees.

2.3.1 On trees or shrubs designated to remain, low hanging branches and unsound or unsightly branches shall be removed as directed. Branches of trees extending over the roadbed shall be trimmed to give a clear height of 20 feet above the roadbed surface. All trimming shall be done by skilled workmen and in accordance with good tree surgery practice.

2.4 Invasive Species

2.4.1 Statutory authority of RSA 430:55, the NH Department of Agriculture, Markets, and Foods prohibits the spread of invasive plants listed in Table 3800.1 of Part AGR 3800. Follow best management practices (BMPs) to avoid spreading these plants to new sites. The NHDOT manual "Best Management Practices for Roadside Invasive Plants" available through NHDOT website .

Method of Measurement

3.1 Clearing and grubbing will be measured by the acre, horizontally, to the nearest 0.01 of an acre, including the area shown on the plans to be cleared and grubbed, together with areas of clearing and grubbing, as ordered, outside the limits shown on the plans.

3.1.1 When fence goes through a wooded area, a strip 3 feet wide will be paid as clearing for fence lines, to the nearest .01 of an acre.

3.1.2 Clearing and grubbing in connection with borrow sources will be subsidiary.

3.2 Trees will be measured by the number of trees of each class removed.

3.3 Stumps will be measured by the number of stumps removed measuring more than 28 inches in circumference at the cutoff. Stumps of trees cut by the Contractor will not be measured. Roadside cleanup will be measured by the acre, horizontally, to the nearest 0.01 of an acre.

3.4 Selective clearing and thinning will be measured by the acre, horizontally, to the nearest 0.01 of an acre.

Basis of Payment

4.1 The accepted quantity of clearing and grubbing will be paid for at the contract unit price per acre.

4.1.1 When no quantity for clearing and grubbing is included in the contract, the work shall be subsidiary.

4.1.2 When no quantity for clearing for fence lines is included in the contract, the work shall be subsidiary.

4.2 The accepted quantities of trees and stumps will be paid for at the contract unit price per each of the class specified.

4.2.1 When and item for removing trees but no item for removing stumps appears in the contract, each stump shown on the plans as a tree and removed as ordered will be paid for at one half the Item Bid Price of a tree of the respective size shown.

4.2.2 This item will not include trees and stumps removed from areas paid for under clearing and grubbing, roadside cleanup, or trees or stumps previously disposed of.

4.2.3 When there is no item for removing small trees and there is an item for large trees, small trees shall be paid for at one half the Item Bid Price of large trees; conversely large trees shall be paid for at twice the Item Bid Price for small trees.

4.2.4 When there are no quantities for either trees or stumps in the proposal, trees and stumps removed shall be subsidiary.

4.3 The accepted quantity of stumps will be paid for at the contract unit price per each. When no quantity of stumps is included in the contract, work ordered to remove stumps will be paid as extra work.

4.4 Removal of Brush will be considered subsidiary.

4.5 The accepted quantity of roadside cleanup will be paid for at the contract unit price per acre.

4.5.1 When no quantity of roadside cleanup is included in the contract, work ordered of such nature will be paid for as extra work.

4.6 Trimming of trees where directed outside of the areas measured under the item of roadside cleanup will be paid for as extra work.

4.7 Selective clearing and thinning is a final pay quantity item and will be paid at the contract unit price per acre.

Pay Items and Units, Section 201 - Clearing And Grubbing :

201.01	Clearing	Acre
201.02	Grubbing	Acre
201.1	Clearing and Grubbing	Acre
201.21	Removing Small Trees	Each
201.22	Removing Large Trees	Each
201.31	Tree Pruning, Small Trees	Each
201.32	Tree Pruning, Large Trees	Each
201.4	Removing Stumps	Each
201.5	Roadside Cleanup	Acre
201.6	Clearing for fence Lines	Acre
201.7	Selective Clearing and Thinning	Acre
-----	Trimming of trees	Extra work

SECTION 202 -- REMOVAL OF STRUCTURES AND OBSTRUCTIONS

Description

1.1 This work shall consist of the demolition, removal, and satisfactory disposal of buildings including contents, foundations, fuel storage tanks, decommissioning of septic systems and wells and other obstructions pertaining thereto, as designated on the plans or in the Contract.

1.2 This work shall consist of the removal and salvage, satisfactory disposal or filling abandoned drainage and sanitary sewer pipes with flowable fill. .

1.3 Salvaging of designated materials, backfilling of any resulting trenches, holes, or pits including dug wells and cesspools, removing or breaking up, as ordered, of septic tanks, backfilling the resultant spaces, furnishing and erecting temporary barricades, and the final grading and cleaning up of the site shall be included under this work unless such work is included under other items in the contract.

1.4 The work shall also consist of the removal and salvage or satisfactory disposal of any other items as designated on the plans or ordered.

Material Requirements

2.1 Backfill material shall conform to AASHTO M 57 using the definitions given in AASHTO M 146, except the density requirement shall conform to 3.8

2.2 Flowable fill for filling abandoned pipes shall consist of materials conforming to Section 520 as appropriate, mixed in the following approximate proportions per cubic yard to form a mixture with a minimum 28 day compressive strength of 100 psi

Table 202- 1 Flowable Fill

Portland Cement (Type II)	20 lb.
Ground Granulated Blast Furnace Slag	100 lb.
Sand	2,830 lb.
Water	40 -50 gal
Air Entrainment	10 -15 percent

Construction Requirements

3.1 General

3.1.1 The Contractor's attention is directed to 103.07. The Contractor must also comply with all Federal, State, and local laws and regulations for removal, transportation, and disposal of structures. As ordered, the Contractor shall remove, and dispose of all structures, guardrail, fences, and other obstructions except utilities and those obstructions for which other provisions have been made for removal. All designated salvageable material shall be

removed without unnecessary damage in sections or pieces that are readily transportable, and shall be stored by the Contractor. Unusable perishable material shall be destroyed. Nonperishable material not designated for salvage shall be buried as directed or, with written permission of the property owner, may be disposed of off the project provided that the material remains outside the limits of view from the project, other highways, and residences. Copies of all such agreements with property owners shall be furnished to the Engineer. If disposal is by burial on private land, it must be in accordance with 105.10

3.1.2 Blasting or other operations necessary for the removal of an existing structure or obstruction, which may damage new construction, shall be completed prior to placing the new work.

3.1.3 Foundations and holes resulting from operations, except within the limits of subsequent excavation, shall be backfilled in accordance with the provisions of Section 203 . If caving has occurred, the caved material shall be removed before backfilling is undertaken. All excavated material shall be used or disposed of in accordance with the provisions of Section 203 .

3.2 Demolishing Buildings

3.2.1 In the case of buildings to be demolished, notice will be given the Contractor when any building becomes available, and upon notice of availability, ownership of the building or buildings, including all equipment, fixtures, building materials, and debris remaining on the lot, except plant belonging to a public or private utility company, shall transfer from the City to the Contractor.

3.2.2 A permit from the City of Manchester, Planning and Community Development Department Building Department is required before the demolition of any building.

3.2.3 The Contractor shall ascertain whether any water, sewer, gas, electric, or telephone services are still connected to the building; if so, he shall disconnect and terminate them in compliance with the requirements of the controlling municipality or company and then proceed with the demolition of the building.

3.2.4 The Contractor shall protect all openings resulting from demolition or removal by use of temporary barricades as necessary for protection and safety of the public. All barricades and obstructions shall be illuminated at night when ordered.

3.2.5 Basements remaining in embankment areas shall be cleared of all interior partition walls, materials, equipment and debris. When directed, to provide vertical drainage, the floor shall be thoroughly broken up into pieces no larger than 4 square feet or shall be perforated at least every 10 feet, lengthwise and crosswise, with holes 1 square foot or more in area. Foundation walls generally shall be pushed in or removed to at least one foot below the adjacent ground level.

3.2.5.1 When the Engineer has ascertained that the above provisions have been complied with, the basement shall be filled to the level of the surrounding ground with the same type of materials as that found at the site, compacted as ordered.

3.2.6 When the buildings have been substantially demolished and removed by others, the Engineer may require the Contractor to remove and dispose of rubbish and debris, demolish foundations, break up cellar floors, clean the cellar of partitions and other materials, clean up the site, and grade, loam, seed, fertilize and mulch the area.

3.2.7 All materials that result from building demolition shall be disposed of by an approved method. The Contractor's attention is directed to RSA 149-M in that building demolition material is classified as a solid waste and as such shall be disposed of only in permitted sites. N.H. Department of Environmental, Division of Waste Management is the permitting agency.

3.2.8 Existing sewer laterals or septic system shall be decommissioned. Existing sewer laterals shall be disconnected and capped. The septic system shall be decommissioned by pumping out the septic tank, removing or breaking up the septic tank, removing any pipes or chambers, if in existence, aerating leach field material, and burying aerated leach field material a minimum of one foot below existing ground.

3.2.9 Existing dug wells shall be sealed in accordance with N.H. Water Well Board Administrative Rules, section We 604.04. Existing dug wells shall have the cover and well tiles removed to an elevation of two feet below the proposed roadway excavation or within two feet of the finished ground. The well shall then be backfilled with gravel free of organic matter to within two feet of roadway subgrade or finished ground in accordance with the requirements of 304.3 listed in Table 304- 1, as appropriate. The remaining two feet outside and/or below the roadbed shall be filled with impervious material such as clay or hardpan.

3.2.10 The Contractor shall remove any existing pump, waterline, and miscellaneous hardware from the well. The existing pump, waterline, and miscellaneous hardware removed from the well shall become the property of the Contractor, unless otherwise noted, and shall be properly disposed of according to current State and Federal regulations. The Contractor shall notify the Engineer before removing the pump.

3.3 Removal of Underground Storage Tanks and Hazardous Materials.

3.3.1 The Contractor shall perform all work as shown on the plans and specified in the contract.

3.3.2 Contractor's attentions is directed to the regulations which may affect the removal operations relative to contaminated soil identification, removal and disposal; tank removal, transportation and disposal; and site safety as follows:

National Fire Safety Code, Chapter 30, Appendix B
New Hampshire Hazardous Waste Rules He-P 1905

Water Supply WS 411
US Laws 49CFR 173.29 and 40CFR part 280

3.4 Removal of Pipe and Structures

3.4.1 Existing pipes, catch basins, manholes and other drainage and sewer structures which are not to remain as integral parts of a drainage or sewer system, shall be removed as directed. Those under roadways in use by traffic shall not be removed until satisfactory arrangements have been made to accommodate the traffic.

3.4.2 When the engineer determines that pieces of pipe removed are suitable for re-use, they shall be stockpiled where directed within the project area and when not suitable for re-use, they shall be disposed of by the contractor. Catch basin and drop inlet grates, manhole covers, frames and all such castings and granite curb inlets shall be carefully removed and likewise stockpiled for re-use on the project or salvaged by the City. Other parts of catch basins, drop inlets and manholes shall be disposed of by the contractor.

3.4.3 Trenches and holes resulting from removal operations except those within the limits of subsequent excavation shall be backfilled in accordance with the provisions of Section 209. If caving has occurred the caved material shall be removed before backfill is undertaken. All excavated material shall be used or disposed of in accordance with the provisions of Section 206 and Section 209.

3.5 Removal of Guardrail

3.5.1 Existing guardrail that is not to remain as an integral part of the Project shall be removed as specified in the Contract documents or as directed. Beam and cable guardrail, in whole or in part designated to be salvaged, shall be carefully removed and handled in a manner that will allow reuse. Buckets, brackets, bolts, nuts, and miscellaneous hardware shall be placed in suitable containers for storage. Guardrail designated to be salvaged shall be stored in accordance with 3.1.1.

3.5.2 Beam and cable guardrail, fittings, hardware, post, and blocks determined unfit for reuse, or not designated for salvage, shall be properly disposed of in accordance with 3.1.1.

3.6 Abandon Pipes. Existing pipe or drainage structures or portions there of designated to be abandoned in place shall be filled with flowable fill.

3.6.1 Ends of pipes and longitudinal drainage structures shall be capped or blocked closed with vents to allow air to escape and flowable fill to show when drainage structure is full.

3.6.2 Proportioning, batching, placing and curing of flowable fill shall conform to the appropriate sections of Section 520.

3.6.2.1 Test data of the proposed mixture shall be submitted to the Engineer for review and approval prior to placing.

3.7 Removal of Fences. Existing fence that is not to remain as an integral part of the Project shall be removed and disposed of in accordance with 3.1.1 as specified in the Contract documents or as directed.

3.8 Curb removal for storage. Existing curb that is not to remain as an integral part of the Project shall be carefully removed and stored as specified in the Contract documents or as directed.

Method of Measurement

4.1 Individual buildings, or groups of buildings when such are designated as a separate unit, will each be measured as a unit. When more than one unit is specified in the contract, separate item numbers will appear for each separate and complete unit.

4.2 Pipe removed will be measured by the linear foot within the specified size group, measured in place prior to removal if practicable; otherwise the length of pipe removed will be computed as the product of the number of commercial lengths and the nominal lengths.

4.2.1 All solid rock will be measured as rock structure excavation. Boulders, mortared structures such as headwalls and the like found to measure 1 cubic yard or more will also be measured as rock structure excavation when such excavation is performed for pipe removal, but pipe itself will not be measured as rock.

4.3 Catch basins, drop inlets and manholes removed, will be measured by each, no extra measurement will be made of granite curb inlets removed unless an item therefore is included in the contract.

4.4 Curb removed for storage will be measured by the linear foot.

4.4.1 Removal of bituminous curb will not be measured.

4.5 Removal of guardrail will be measured, by the linear foot to the nearest 1 foot.

4.6 Fill abandoned pipe will be measured by the cubic yard to the nearest 0.1 of a cubic yard of flowable fill based on delivery slips of material placed.

4.6.1 Flowable fill removed because of faulty workmanship, or remaining in the delivery vehicle will not be included in the pay quantity.

Basis of Payment

5.1 The following provisions are in connection with the item of demolishing buildings:

5.1.1 There will be no separate payment for the cost of any utility work including charges, if any, which may be made by the municipality and utility Companies.

5.1.2 The City cannot assume responsibility and must be held harmless for damage to buildings or losses of or from buildings between the date of advertising for bids and the time the Contractor can take possession.

5.1.3 Work performed under 3.2.5 and 3.3 will be paid for either under pertinent items of the contract or as provided under 108.04.

5.2 When no basis of payment for the removal of structures and obstructions shown on the plans is included in the proposal, such work will be subsidiary.

5.3 The accepted quantities of pipes, box culverts, catch basins, drop inlets, manholes, removal of guardrail, curb removal for storage and other obstructions demolished or removed will be paid for at the Item Bid Price per unit of measurement for each of the pay items listed hereinafter.

5.3.1 No payment will be made herein for the removal of pipes, box culverts, catch basins, drop inlets, manholes and other obstructions encountered within the payment limits of another excavation item in the contract.

5.4 There will be no separate payment for items paid for herein except that rock measured under 4.2.1 will be paid for as rock structure excavation. There will be no deduction from borrow for material used to fill the remaining cavities.

5.5 Existing pavement removed will be paid for under the pertinent excavation items.

5.6 When no basis of payment for the removal of structures and obstructions shown on the plans is included in the proposal, such work will be subsidiary.

5.7 Removal of guardrail will be paid for at the Contract unit price per linear foot.

5.7.1 No separate payment will be made for the removal of guardrail anchors or terminal units.

5.8 Removal of bituminous curb will be paid for under the excavation item unless otherwise specified in the plans.

5.9 There will be no separate payment for backfill material and such work will be subsidiary to the respective removal item.

5.10 There will be no separate payment for decommissioning sewer laterals and such work will be subsidiary.

5.11 The accepted quantities of fill abandoned pipe or drainage structure will be paid for at the Contract unit price per cubic yard complete in place. Capping or blocking and vents will be subsidiary.

Pay Items and Units, Section 202 -- Removal Of Structures And Obstructions:

202.2	Demolish Buildings	Unit
202.31	Fill Abandoned Pipe	C.Y.
202.32	Fill Abandoned Structure	C.Y.
202.41	Removal of Existing Pipe 0-24" diameter	L.F.
202.42	Removal of Existing Pipe over 24" diameter	L.F.
202.5	Removal of Catch Basins, Drop Inlets and Manholes	Each
202.51	Removal of Granite Curb Inlets	Each
202.6	Curb Removal for Storage	L.F.
202.7	Removal of Guardrail	L.F.

SECTION 203 --EXCAVATION AND EMBANKMENT

Description

1.1 This work shall consist of excavation of all material not being removed under some other item, placement and compaction of all material required for the work, and necessary disposal of all other material. The excavation will be classified as described below. Embankment-in-place shall consist of furnishing, placing and compacting the total volume of embankment material required to construct fills below subgrade and within template lines as shown on the plans excluding slope protection measures and landscaping treatments paid under separate items. Rehandling surcharge material shall consist of removing and redepositing the surplus surcharge material which has been used to displace or consolidate soft material below specified sections of fill.

Classification of Material

2.1 Common excavation shall consist of all excavation not included as rock excavation or not otherwise classified. Glacial till or boulder clay will be considered as common excavation.

2.2 Rock excavation shall consist of all solid rock which cannot be removed without blasting or ripping. It shall also consist of boulders and parts of masonry structures greater than or equal to one cubic yard when found during pipe construction and greater than or equal to two cubic yards during roadway construction .

2.3 Unclassified excavation shall consist of all materials of whatever character encountered in the work.

2.4 Muck shall consist of deposits of saturated or unsaturated organic soils having an organic content of 20 percent or greater by weight as determined by AASHTO T 267 and is greater than 2 feet (0.6 meters) thick when in the upper soil profile (topsoil) and is determined to be unsuitable for foundation material. The material contains partially decayed organic matter, is fibrous in texture, dark brown or black in color, and has an odor of decay.

2.5 Embankment material shall consist of approved material required for the construction of fills or other portions of the work. The density requirements shall conform to 203.3.8.

2.6 Concrete class F, flowable fill may be requested in writing as a substitute for embankment. Approval shall be in consideration of, but not limited to, differential frost heaving due to dissimilar materials, unit weight, structural requirements, lack of permeability, and damming resulting from water flow cut off.

2.7 Impervious material shall be natural, inorganic soil that is free from foreign matter such as construction debris, trash, wood, roots, leaves, and other organic matter.

2.7.1 Some examples of soils that are considered acceptable for impervious material are clay, glacial till, and well graded soils with high silt contents. Impervious material shall be as follows when tested in accordance with AASHTO T 27:

Table 203 - 1
Impervious Material Gradation

Sieve Size	Percentage by Weight Passing
6 inch	100
2 inch	95 - 100
No. 4	70 – 100
No. 40	35 – 100
No. 200 in total	25 - 100

2.7.2 For a preliminary determination of compliance with the specification for grading and for determination of the maximum dry density, the Contractor shall submit to the Engineer samples of materials to be used for impervious material prior to its placement. Samples may be taken from the pit or from stockpiles. Sampling and testing shall conform to AASHTO T 27, R 13, and T 99. Materials not meeting these specifications shall not be placed.

2.8 Unsuitable material shall consist of any saturated or unsaturated natural or man-made material such as, but not limited to, stumps, vegetation, demolition debris and structures encountered during the work that the Engineer determines to be unsuitable for foundation material.

Construction Requirements

3.1 General. The excavation and embankments shall be finished to reasonably smooth and uniform surfaces.

3.1.1 Conservation of growth. Excavation shall be carefully performed in proximity of trees and shrubs designated to be saved on the plans or as ordered. Any roots which have to be removed shall be cleanly cut, and the larger ones shall be painted with approved wood dressing or treated according to other accepted arboricultural practices.

3.1.2 Topsoil and other humus material. Topsoil and desirable humus material shall be removed in excavation areas and also in fill areas to such depths as the Engineer may direct. Such material shall be reserved and shall be stockpiled in accessible piles which can be measured readily and accurately by the Engineer. Unless otherwise permitted, each stockpile shall contain a minimum of 200 cubic yards, and have a height of at least 4 feet.

3.1.3 Material found in the roadway. Sand, gravel, or other materials found in the roadway may be used under the specific item in accordance with 103.04 when permitted.

3.1.4 Removing abandoned road surface. Old road surfaces shown or ordered to be removed shall be stripped neatly to the depth and width as shown on the Plans or as ordered.

3.1.5 Drives. Drives shall be retained or constructed as shown on the plans or as ordered.

3.1.6 Degraded material. When the Contractor's selected method of excavation operations results in saturation of non- porous materials and as a consequence the excavation must be wasted, a deduction from borrow will be made of the amount wasted. The quantity shall be as determined by the Engineer.

3.2 Rock Excavation.

3.2.1 Preliminary work. When rock excavation is to be performed the overburden shall be removed, or trenches shall be excavated through the overburden at the intervals directed, normally 25 feet, but in no case closer than 10 feet apart to permit cross-sectioning of the rock in its original position. Generally, the use of power equipment will be satisfactory. Rock removed prior to sectioning will be considered as common excavation.

3.2.2 Blasting operations. The required slopes or configurations shown on the plans or ordered shall be constructed in a safe and stable condition while insuring the safety and convenience of the public.

3.2.2.1 The Engineer will, at all times, have the authority to prohibit or halt the Contractor's blasting operations if it is apparent that through the methods being employed, the required slopes are not being obtained in a stable condition or the safety and convenience of the public is being jeopardized.

3.2.2.2 The Contractor shall schedule his operations so that all rock excavation within 300 feet of any portion of a proposed bridge or within 100 feet of any other proposed structure is completed before any structure work is started.

3.2.2.3 All loose and unstable material, all breakage and potentially unstable rock slides, even if located beyond the payment lines, shall be removed or stabilized, to the Engineer's satisfaction during or upon completion of the excavation in each lift. Drilling of the next lift will not be allowed until this work has been completed. It shall be the responsibility of the Contractor to perform all phases of this work to produce the required slopes.

3.2.2.4 All blasting operations, including the storage and handling of explosives and blasting agents, shall be performed in accordance with the applicable provisions of the Standard Specifications and all other pertinent Federal, State, and local regulations. Whenever explosives are used, they shall be of such character and in such amount as is permitted by the State and local laws and ordinances and all respective agencies having jurisdiction over them.

3.2.2.5 The Contractor shall observe the entire blast area to guard against potential hazards before commencing work. The Contractor shall not be allowed to store

explosives on the project site or on City owned property unless prior approval is granted by the Department.

3.2.2.6 Drill hole conditions may vary from dry to filled with water. The Contractor will be required to use whatever type(s) of explosives and/or blasting accessories necessary to accomplish the specified results.

3.2.3 The Contractor shall submit the following information to the Engineer at least two weeks prior to commencing drilling and blasting operations:

a) Sequence and schedule of production blast rounds, including the general method of developing the excavation, lift heights, starting locations, estimated starting dates, estimated rates of progress, etc.
b) Written evidence of the licensing, experience and qualifications of the blaster who will be directly responsible for the loading and firing of each shot.
c) Name and qualifications of the person responsible for designing and directing the Contractor's blasting operation.
d) Name and qualifications of the independent seismologist or blasting consultant proposed for use in conducting pre- blast condition surveys.
e) Name and qualifications of the independent seismologist of blasting consultant proposed for use in monitoring blast vibration (see section 3.2.5.2). A sample of a previous vibration analysis and/or report shall be included with the qualifications. The seismologist or blasting consultant shall be subject to the Engineer's approval.
f) Listing of instrumentation which the seismologist or blasting consultant proposes to use to monitor vibrations together with performance specifications, instrumentation user's manual supplied by the manufacturer(s). (See section 3.2.5.6).

3.2.4 Blasting log. A blasting log must be completed daily for every primary blast and copies must be provided to the Engineer. An example of a typical blasting log is shown in Figure 1. The drilling contractor may use a different format for his blasting log if it has been approved by the Engineer.

3.2.5 Blast vibration control and monitoring. The Contractor shall be required to comply with the blasting vibration limits established herein. The Contractor shall provide for monitoring of the blasting vibrations (both ground and air concussions) produced as a result of the construction activities and shall provide for a Pre-Blast Condition survey of structures. The Contractor shall cooperate in adjusting his blasting procedures to maintain the vibration limits specified herein and to minimize vibration-related claims and complaints.

3.2.5.1 Vibration limits.

3.2.5.1.1 Ground Limits. The maximum peak particle velocity (PPV) of ground vibration (in any of the three mutually perpendicular components of particle velocity) for above- ground, residential structures shall not exceed the following limits:

Table 203 - 2
Ground Vibration Limits

Type of Structure	Peak Particle Velocity, Inches/Sec	
	Frequencies Below 40 HZ	Frequencies 40 HZ or Greater
Modern Homes -Drywall Interiors	0.75	2.0
Older Homes -Plaster on Wood Lath for Interiors	0.50	2.0

3.2.5.1.2 The maximum peak particle velocity of ground vibrations (in any of the three mutually perpendicular components of particle velocity) for non-residential structures shall not exceed 2.0 inches/sec.

3.2.5.1.3 The maximum PPV of ground vibrations, in any of the three mutually perpendicular components of particle velocity, for underground utilities shall not exceed 2.0 in/s. Buried pipelines and other utilities owned by private utility companies are sometimes subject to lower limiting values imposed by the owner. The Contractor shall verify the maximum allowable PPV of ground vibration allowed by the individual utilities.

3.2.5.1.4 Deteriorated structures or utilities, structures housing computers or other sensitive equipment, and manufacturing processes that are sensitive to vibrations may require lower PPV limits than stated in this specification. If lower limits are required, a special prevision describing the limits or conditions required will be included in the proposal.

3.2.5.1.5 The Contractor shall not conduct blasting operations within 20 ft of newly placed concrete regardless of the age of the concrete. For blasting greater than 20 ft away from new concrete, the following vibration limits apply:

Table 203 - 3
Ground Vibration Limits for New Concrete
Maximum PPV (in/s)

Distance to Blasting (ft)	Type I Concrete <24 hrs	>24 hrs Old	Type II Concrete <24 hrs	>24 hrs Old
20 - 50	2.0	4.0	1.5	3.0
40 - 150	1.5	3.5	1.0	2.5
> 150	1.0	3.0	0.5	2.0

Type I concrete construction shall be considered to be concrete which is not designed to undergo structure bending or deflection. In general, a concrete section shall be considered Type I if the vertical dimension is not more than twice the horizontal dimension. Examples of Type I concrete construction are fill or mass concrete, spread footings, and slabs cast on grade. Type II concrete construction shall be considered to be concrete which is not Type I, and includes structural walls and slabs over an open span.

3.2.5.1.6 Air concussion. The contractor shall conduct all blasting activities in such a manner that the peak airblast overpressure at all above ground, occupied structures in the vicinity of blasting does not exceed 128 decibels (dB).

3.2.5.1.7 If blast induced ground vibrations exceed the limits for maximum peak particle velocity, then alternative rock excavation techniques may be necessary. All non-explosive methods of rock excavation are subject to approval by the Engineer.

Figure 203-1 Blasting Log
BLASTING LOG

1. Company name: _____

2. Location of Shot (Station): _____

3. Shot #: _____ 4. Time: _____ 5. Date: _____

6. Weather: _____

_____

7. Wind Direction: _____ 8. Temperature: _____

9. Distance & Direction to Nearest Structure: _____ & _____

10. Depth of Water (ft.): _____

11. Total Explosives Allowed Per Delay Period:

Weight of Explosive(s) (lb)= (Distance in Feet* / 50)^2 = _____

*Distance to nearest structure

12. Diameter of Holes (in.): Production _____ Presplit _____

13. Hole Depth (ft.): _____

14. Total # of Holes: _____

15. Drill Pattern - Burden x Spacing (ft.): _____

20. Density of Explosive(s) Used: _____

21. Kind of Delay Periods: _____

22. Total # of Delay Periods: _____

23. Length of Delay Periods (ms): _____

24. Total of Explosives Used (lbs.): _____

25. Maximum # of Holes Per Delay Period: _____

26. Maximum Amount of Explosive(s) Per Delay Period (lbs): _____

27. Powder Factor = $\frac{\text{Pounds of Explosives Per Hole}}{\text{Cubic Yards of Rock Per Hole}}$

Powder Factor = (lbs/yd^3) _____

Figure #203-1 (continued)

28. Scale Distance = $\frac{\text{Distance in Feet}}{(\text{Weight Per Delay Period})^{1/2}}$

Scale Distance = _____

29. Method of Firing: _____

30. # Series, Circuits: _____

31. Location of Seismograph: _____

_____

a. Distance from Shot and Direction: _____

b. Person Taking Reading: _____

c. Seismograph Reading: _____

d. Peak Sound Pressure Level: _____

e. Vibration Measurements: _____

Transverse
Vertical
Longitudinal

DIAGRAM OF SHOT

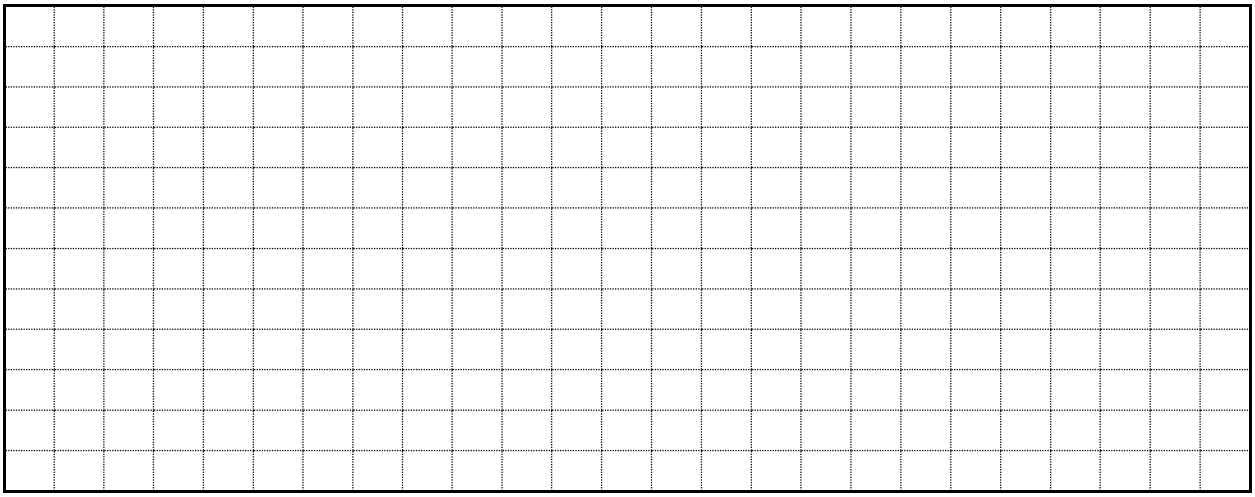

Name of Blaster: _____
License Number of Blaster: _____

3.2.5.2 Seismologist/Blasting Consultant. The Contractor will be required to retain a seismologist or Blasting Consultant to monitor, record, analyze, and report the seismic vibrations being caused by blasting activities. The name of the Seismologist/Blasting Consultant and a resume of his qualifications shall be submitted to the Engineer for approval no later than the preconstruction conference. No drilling or blasting shall take place until such approval is given. The Seismologist/Blasting Consultant shall not be an employee of the Contractor, subcontractor, explosives manufacturer, or explosives distributor.

3.2.5.3 Seismologist/Blasting Consultant qualifications. The Seismologist shall be experienced in the subject of vibrations emanating from construction activities. He shall be qualified to thoroughly analyze seismic parameters of the energy source, the energy transmission path, recording site and the ground motion spectra. Minimum qualifying requirements to perform the necessary documentation and analysis are as follows. A Bachelor of Science degree with accredited course work in at least three of the following disciplines: Seismology, Geophysics, Geophysical Data Processing, Geomechanics, Geophysical Engineering, Vibration Engineering, Soil and/or Rock Mechanics, Foundation and/or Explosive Engineering, Advanced Calculus, Time-Series (Fourier) Analysis.

3.2.5.4 Seismologist/Blasting Consultant duties. The Seismologist/Blasting Consultant will direct and instruct the Contractor in his operations to control vibrations within acceptable levels. The Seismologist/Blasting Consultant shall be in charge of making the preliminary blast survey and unless otherwise permitted in writing, shall be present at the site of the blasting during all blasts. The Seismologist/Blasting Consultant shall provide and utilize all necessary equipment to observe and record vibrations to ascertain that acceptable levels of vibrations are not exceeded. The Seismologist shall monitor, report his findings, and submit his recommendations on a daily basis to the Engineer. He shall determine the level of observed vibrations attributed to the project's blasting activities and their subsequent effect on surrounding structures.

3.2.5.5 Pre-blast condition survey. The Seismologist or Blasting Consultant shall conduct a pre-blast condition survey of all existing structures and conditions on the site, adjacent to the site, or in the vicinity of the site. This survey shall extend to such structures or conditions as may be affected by the Contractor's construction operations As a minimum, condition surveys shall be performed on all structures (including swimming pools and mobile homes) within 500 feet of anticipated blasting areas.

The pre-blast condition survey shall consist of a written description of the interior and exterior condition of each of the structures examined. Descriptions shall locate any existing cracks, damage, or other defects and shall include such information so as to make it possible to determine the effect, if any, of the construction operations on the defect. Where significant cracks or damage exists, or for defects too complicated to describe in words, photographs shall be taken. A good quality videotape survey with appropriate audio description of locations, conditions, and defects can be used.

3.2.5.5.1 The Seismologist or Blasting Consultant shall give written notice to the owner of the property concerned, tenants of the property, and any representative of local authorities required to be present at such survey. The notice shall state the dates on which surveys are to be made. Copies of all notices shall be provided to the Engineer.

3.2.5.5.2 Prior to the start of blasting activities, the Contractor shall place an advertisement in the local newspaper and provide a notice to adjacent property owners and tenants identifying the project, blasting contractor, site location, warning signals and precautions being taken by the blasting contractor to minimize disturbance to residents.

3.2.5.5.3 Upon completion of all earth/rock excavation and blasting work, the Contractor shall conduct a post-blast survey of any properties, structures, and conditions where complaints of damage have been received or damage claims have been filed. Notice shall be given to all interested parties so that they may be present during the final examination. Records of the final examination shall be distributed the same as the original pre-blast condition survey.

3.2.5.6 Vibration monitoring instrumentation. All vibration monitoring instrumentation proposed for use on the project by the Contractor shall comply with the following characteristics:

a) Measure, display, and provide a permanent record on a strip chart of particle velocity components.
b) Measure the three (3) mutually perpendicular components of particle velocity in directions vertical, radial and perpendicular to the vibration source.
c) Have a velocity frequency response of 2 Hz to 150 Hz, and be capable of measuring peak particle velocity of up to 10 inches per second.
d) All seismographs used on the project shall display the date of the most recent calibration.
e) Calibration must have been performed within the last 12 months and must be performed to a standard traceable to the National Institute of Standards and Technology.

3.2.5.7 Report of Monitoring Results.

3.2.5.7.1 Following each blast, the Contractor shall immediately report the measured vibrations to the Engineer. In the event seismic vibrations caused by the Contractor's operations approach the established limits for this project, the Engineer may require the Contractor to modify his blasting operations to reduce the vibrations. If the seismic ground vibration and/or air concussions caused by the Contractor's blasting operation attain or surpass the established limits, the operations shall cease. Blasting shall not be resumed until measures have been taken to reduce, to the satisfaction of the Engineer, the produced vibrations and/or air concussions below

established limits. The seismologist or blasting consultant should assist the Contractor in the design of his blasting to eliminate the problems and to avoid liability claims.

3.2.5.7.2 Within 24 hours following each blast, the Contractor shall submit to the Engineer in writing the following items:

a) Details of the round as shot to include the information shown on the sample blasting log (see Figure 203-1 Blasting Log)
b) Results of blast monitoring at each instrument location, including peak particle velocity in inches per second (in/sec), as well as a copy of the strip chart recording for each monitoring location, marked with the date, time, location of the equipment, and signature of seismograph operator.

3.2.5.8 Pre-blast meeting. A pre-blast meeting shall be held prior to the start of any drilling or blasting activities. The purpose of the meeting shall be to review the blasting procedures and vibration monitoring requirements, and to facilitate coordination between all parties involved. Individuals attending the pre-blast meeting should include the Project Engineer, the Contractor, the Contractor's seismologist or blasting consultant, the Contractor's Blaster, the research geologist, any utility affected by the blasting operation, and any other personnel the Engineer deems appropriate.

3.2.5.9 Blast scheduling. The Contractor shall notify the Engineer of blast round schedules in accordance with the following requirements:

a) At least 24 hours in advance, notification of estimated time of blast.
b) At 30 minutes prior to a blast give a stand-by notification.

3.2.5.10 Warning signals. Adequate warnings in accordance with OSHA regulation 1926.909 shall be given to all personnel in proximity to the blast site at least 3 minutes in advance of each blast.

3.2.5.11 Flyrock control. Before the firing of any blast in areas where flying rock or debris may result in personal injury or damage to property, the rock to be blasted shall be covered with approved blasting mats, soil, or other equally serviceable material, to prevent flyrock. The method of flyrock control shall be subject to approval by the Engineer.

3.2.5.12 Responsibility for blasting operations. Review of the Contractor's blasting submittals by the Department or its Engineer shall not relieve the Contractor of his responsibility for the accuracy, adequacy, and safety of the blasting; exercising proper supervision and field judgement; preventing damage to structures; and producing results within the limits required by the State of New Hampshire regulations, City of Manchester Blasting Permit and these Specifications. The Blasting Contractor shall be solely and completely responsible for the safety of all persons and property during the performance of his work. The Contractor shall take whatever measures he deems necessary, in addition to the requirements herein, to protect the safety of persons and property, both at

the construction site and away from the site. The Contractor shall have full and complete responsibility for handling, discharging or settling of any and all damage or annoyance claims resulting from the blasting activities on the project. Any monitoring and/or review of the Contractor's procedures and performance conducted by the Department or its Engineer shall not relieve the Contractor of his responsibility for safety at and away from the site, and for preventing damage to adjacent structures or property.

3.3 Presplitting.

3.3.1 Presplitting will be required in rock slopes where the designed slope is 1:2 or steeper and the rock is 10 feet or more in depth above the subgrade, measured along the slope.

3.3.2 Presplitting is defined as the establishment of a free surface of a shear plane in rock by the controlled usage of explosives and blasting accessories in appropriately aligned and spaced drill holes so that the resulting split rock will not be affected by subsequent blasting and excavation operations adjacent thereto. The purpose of presplitting is to minimize damage to the rock backslope helping ensure long-term stability. When presplitting, the detonation of the presplit line shall be before detonation of any production holes. Production blasting refers to the main fragmentation blasting resulting from more widely spaced production holes drilled throughout the main excavation area adjacent to the presplit line. Production holes shall be detonated in a controlled delay sequence.

3.3.3 Prior to drilling, all overburden and all loose and disintegrated rock shall be removed down to solid rock in the vicinity of the presplit lines as shown on the plans. Potentially dangerous boulders beyond the excavation limits shall also be removed as ordered.

3.3.4 Presplitting shall extend a minimum of 50 feet ahead of the limits of fragmentation blasting within the section, unless otherwise permitted.

3.3.5 Unless otherwise approved, holes not greater than 3 inches in nominal diameter, andspaced 36 inches on center, shall be drilled along the presplit line and at the required slope inclination to the full depth of the cut or to a predetermined stage (lift) elevation. The proper angle of drilling shall be maintained at all times so that each presplitting hole is parallel to its adjacent one and does not deviate more than 1 foot in 35 feet, neither in the plane of the specified slope line nor in its vertical alignment. The toe of the completed slope shall coincide, within those limits, with the toe of the slope shown on the plans. All drilling equipment used to drill presplit holes shall have mechanical or electrical devices affixed to the equipment to accurately determine the angle at which the drill steel enters the rock, unless alternate methods for aligning the drill steel are approved by the Engineer.

3.3.6 Presplitting holes shall not exceed 35 feet in depth unless permitted. Rock deeper than 35feet shall usually be presplit in lifts, but no lift shall be less than 10 feet in depth. No payment will be made for additional excavated quantity caused by offsetting of presplit holes beyond the specified presplit lines in the top or successive lifts. Presplitting holes in successive lifts will be designed to offset 2 feet inside of the previously presplit face.

3.3.7 Before placing the charge, each hole shall be inspected and tested for its entire length to ascertain the possible presence of any obstructions. No loading will be permitted until the hole is free of all obstructions for its entire depth. All necessary precautions shall be exercised so as to prevent debris from falling into holes prior to loading and so that the placing of the charge will not cause caving of material from the walls of the holes.

3.3.8 The spacing of the blast holes specified above, the distribution and type of explosives, methods of detonation, and blasting techniques specified below shall be adjusted as necessary according to the breakage characteristics and structure of the bedrock encountered so as to presplit the rock along the required face.

3.3.8.1 Results of presplitting shall be exposed for the Engineer's examination and evaluation. Based upon the Engineer's judgment of results obtained during the progress of the excavation, changes ordered in drilling or blasting methods shall be implemented by the Contractor.

3.3.9 Continuous column cartridge explosives manufactured especially for presplitting shall be used for all presplitting. The maximum diameter of explosives used in presplit holes shall not be more than ½ the diameter of the presplit hole, unless otherwise approved. The bottom charge of a presplit hole may be larger than the line charges, but shall not be large enough to cause overbreak. The upper portion of all presplit holes, from the topmost charge to the hole collar, shall be stemmed. Unloaded and unstemmed guide holes (gas release holes), when used between presplit holes, shall be drilled in the same plane and to the same tolerance as the presplit holes. The guide holes shall extend the full depth of the lift, unless otherwise permitted.

3.3.9.1 If presplitting charges are fired with detonating cord, the cord shall extend the full depth of each hole. If full or fractional portions of dynamite cartridges are used with detonating cord, the dynamite shall be securely affixed to the cord.

3.3.10 All space in each blast hole not equipped by the explosive charges shall be filled with stemming material. Stemming material shall be clean stone chips or other approved angular granular material as shown below.

Table 203 - 4 Required Grading of Stemming Material

Sieve Size	Percentage by Weight Passing
3/8 inch	100
No. 4	20 - 25
No. 8	0 – 10

3.3.11 All presplit holes may be detonated simultaneously or delayed providing the hole to hole delay is no more than 25 milliseconds. The detonation of presplit charges shall precede the detonation of adjacent fragmentation charges within the section by a minimum of 25 milliseconds.

3.3.12 The line of blast holes immediately adjacent to the presplitting slope holes shall be drilled 4 feet from and on a plane approximately parallel to the plane of the presplitting slope holes. No portion of these holes or any other blast holes will be permitted closer than 4 feet to the presplit lines. All precautions as necessary shall be taken so as to avoid fracturing the rock beyond the presplit face.

3.3.13 The Engineer may order the discontinuance of the presplitting operations when the rock formation is of such character that no apparent advantage is gained.

3.3.14 The Contractor may use cushion (trim) blasting if conditions warrant it and, in the opinion of the Engineer, satisfactory results are obtained during the test shot(s). Cushion blasting is similar to presplitting except that the detonation along the cut face shall be performed after the detonation of all production holes. Difference in delay time between the trim line and the nearest production row shall not be greater than 75 milliseconds nor less than 25 milliseconds. With the exception the above criteria, requirements previously given for presplitting shall also apply to cushion blasting.

3.4 Unclassified excavation. When the excavation is unclassified, either in the proposal or by the Contractor's bid, the Contractor may make arrangements with the Engineer for the taking of sufficient measurements of the rock in its original position to enable subsequent determination of the quantity of rock involved in any overbreakage. If the Contractor elects not to make such arrangements, he shall have no claim for rock overbreakage.

3.5 Muck Excavation. Muck excavation shall be performed in areas shown on the plans and in areas encountered during the work where the material meets the definition of muck as defined in 2.4

3.5.1 Removal and Replacement. The excavation of muck shall be handled in a manner that will not permit the entrapment of muck within the backfill. The backfilling of the excavated area shall follow immediately behind the excavation of the muck in order that any soft material which is pushed ahead of the backfill can be removed. With muck removal, the Contractor shall allow the Engineer adequate opportunity to take all the necessary elevations and measurements for determining the volume removed.

3.5.2 Any suitable muck removed shall be incorporated in portions of the embankment slopes as directed, or used for other approved purposes.

3.6 Subgrade and Slopes.

3.6.1 Removal and replacement of unsuitable material. Where excavation to designed elevations results in a subgrade or slopes of unsuitable material, the Engineer will require the removal of the unsuitable material to such limits as he may direct. Muck shall be removed as shown or ordered. The backfilling shall be done with approved material and compacted to the design subgrade or slope lines unless otherwise ordered. Material placed in wet slopes shall be one of the following: (1) material meeting the requirements of 304.2; (2) rock, when rock is available from excavation, or (3) a mixture of both. Backfill replacing unsuitable material where groundwater is present shall follow immediately behind the excavation of unsuitable material in order that any unsuitable material that is pushed ahead of the backfill can be removed.

3.6.2 Backfill of over-excavated subgrade in rock. All over-excavated subgrade in rock shall be replaced with approved porous granular materials such as sand, gravel, broken rock, or any combination thereof. Non-porous materials will not be acceptable.

3.7 Embankments.

3.7.1 General. The Contractor shall place and compact embankment materials in full uniform layers at thicknesses specified below or ordered. Continuous leveling and manipulation shall be employed to ensure uniform density. Where end dumping is employed, embankment material shall be dumped on the layer of embankment being constructed and bulldozed ahead into place. End dumping over completed work which allows material to roll into place will not be permitted.

3.7.2 Backfill of holes. Holes resulting from the removal of stumps, boulders, and the like, within the zone of anticipated frost action shall be filled and compacted with material similar to that surrounding the hole.

3.7.3 Placing on steep slopes. Benching or terracing of slopes steeper than 3 to 1 shall be performed in conjunction with the placing of embankments abutting such slopes, in the manner directed.

3.7.4 Placing in unsuitable areas. . Removal and replacement of unsuitable material shall follow the requirements of 3.6.1.

3.7.5 Placing rock on roadway. Rock fragments in fills shall be placed in layers of such thickness as the Engineer may direct, and in no case in excess of 4 feet. The lifts shall be worked in such a manner as to close the voids with spalls and fines. When sufficient spalls or fines are not available to close the voids, earth shall be used to make a tight surface prior to placing the next lift.

3.7.6 Placing embankment material at pile locations. In areas where piling is to be driven, the embankment, unless otherwise permitted, shall be made and compacted before

driving the piles. No rock fragments, boulders, or other solid material shall be placed where such material could interfere with pile driving operations.

3.7.7 Placing Earth on Roadway.

3.7.7.1 Earth shall be placed in layers the full width of the roadway, generally parallel to the finished grade. The layers shall not exceed 12 inches of loose depth unless otherwise directed. Each layer shall be spread to a uniform thickness and compacted to the required density prior to placing the next layer. Continuous grading or shaping shall be carried out concurrently with the compactive effort to ensure uniform density throughout each layer material. Embankment material to be placed adjacent to granular backfill shall be placed concurrently with the granular backfill to provide lateral support.

3.7.7.2 Embankments shall be graded at all times to ensure the run-off of water. Any saturation of non-porous materials due to the Contractor's selected method of operation will require the suspension of additional work on the area until rectification by drying, removing and replacing, or draining has restored the fill to a stable condition at the Contractor's expense.

3.7.8 Winter construction methods. No embankments shall be constructed on frozen earth materials. Each layer of material placed shall be compacted to the required density before it freezes. All frozen material shall be removed from the top of embankments prior to placing additional material. The frozen lumps of earth removed shall be placed outside of the limits of an assumed 1.5 to 1 slope from the break in the shoulder and inside the designed or ordered slope line. If the above specified conditions cannot be met, earthwork operations shall be suspended. In no case shall the scarifying or breaking up of frost be accepted instead of removal.

3.7.9 Backfill at Structures.

3.7.9.1 Where masonry is to rest on a rock surface, all space resulting from excavating rock within vertical planes through the neat lines of the footings shall be backfilled with concrete of the same class as that in the footings, unless otherwise shown or ordered.

3.7.9.2 All spaces resulting from excavation adjacent to the structure shall be backfilled to the level of the surrounding ground with suitable material from the excavation, free from rock, lumps, wood, or other foreign matter, unless otherwise shown or ordered.

3.7.9.3 Backfilling around footings shall be done immediately after form removal. Backfilling adjacent to and over arch rings or rigid frame structures shall not be performed until 21 days after the concrete has been placed, or the test cylinders prepared from the fresh concrete and cured in the laboratory have attained 80 percent of the minimum compressive strength of the class of concrete shown on the plans. Backfill material shall not exceed the optimum moisture content by more than 2 percentage points. The material shall be placed in layers not more than 12 in. loose depth and compacted. To avoid unequal pressures, the material shall be placed and compacted

evenly on both sides of arches and other frame type structures. All required material shall be placed in front of walls and abutments prior to beginning fills behind these structures. Unless otherwise permitted, backfilling behind bridge abutments shall be made to the elevation of the bridge seat before the structural steel is erected. Mechanical tamping or vibrating devices must be used where the use of rollers and the like are impracticable.

3.7.9.4 Density requirements shall conform to 203.3.8.

3.7.9.5 Adequate drainage shall be provided at all times. Water shall be used only in sufficient amounts to obtain the required compaction. Under abnormal conditions where there is no possibility of developing a liquid pressure on the structure and it is impossible or difficult to use power tamping or vibrating devices, the Engineer may order the use of water in such amounts as may be necessary to assist in placing and compacting the backfill.

3.7.10 Embankment foundation. Unless otherwise shown on the plans or ordered, where the existing ground is 3 feet or less below subgrade, the top 6 inches within the limits of the roadbed shall be compacted to the same density as that required of the first layer of material to be placed on it.

3.8 Density Requirements and Tests.

3.8.1 For all earth materials at least 95 percent of maximum density shall be obtained. The maximum density determination will be made as specified in AASHTO T 99. (Standard Proctor Test). The in-place density determination will be made by AASHTO T 191, (Sand Cone Method), AASHTO T 204 (Drive Cylinder Method), or by AASHTO T 238 and T 239, (Nuclear Method). If the required density cannot be achieved with the equipment at hand, the Contractor shall obtain whatever equipment is necessary to achieve the specified density. Manipulation of tills, silts, and clays, or any combination thereof, (including aeration where necessary) will be required to produce a stable fill of the required density.

3.8.2 Those materials which cannot be tested for maximum density in accordance with AASHTO T 99 may be tested for maximum density by the following procedure.

3.8.2.1 Test Strip Procedure. At the beginning of the compaction operation, the maximum density shall be determined by compacting a short control section or "test strip" at a suitable moisture content until no further increase in density can be obtained. The densities shall be obtained by the use of nuclear density testing equipment. A new test strip may be required by the Engineer where there is a significant change in the gradation of material being placed. Compacting of the test strip shall be done with an approved vibratory roller or compactor producing a dynamic force of at least 27,000 pounds.

3.9 Disposal of Surplus and Waste Material.

3.9.1 Definitions.

(a) Surplus material. Excess material from excavation beyond the minimum requirements of the project but otherwise suitable for use.

(b) Waste material. Material unsuitable for use in the work, except in noncritical areas.

3.9.2 If the material is surplus, written permission from the Engineer must be obtained before the Contractor may dispose of such material outside of the work.

3.9.3 When practicable and wherever directed, surplus and waste material shall be utilized for flattening slopes or for other grading within the project.

3.9.4 When specified on the plans, surplus material shall be hauled off the project for use elsewhere for highway purposes. Such material shall be placed in accordance with the appropriate specification.

3.9.5 In case it is impossible to dispose of all the surplus and waste material in the manner described above and when the contract does not contain the item of embankment-in- place, the remainder shall be disposed of as directed or permitted. It shall be the Contractor's responsibility to secure disposal areas for surplus and unsuitable material in case such areas are not shown on the plans. The Contractor shall also be responsible for securing proper written disposal agreements with the property owner.

3.9.6 If disposal of surplus and waste material is by burying, the cover material shall be graded and shaped as directed by the Engineer. Without special permission, slopes shall not be left steeper than 2:1. No disposal area shall be left in such condition that erosion might result in water pollution by silt or other deleterious substances. Areas shall be left in such shape and condition that material will not wash and block or obstruct drainage ways. If holes caused by settlement appear, they shall be filled as directed.

3.9.7 Unless otherwise ordered, disposal areas shall be covered with material capable of supporting vegetation and either fertilized and seeded with grass seed or planted with seedlings. Seedlings shall be set out in accordance with accepted horticultural practices as directed in the agreement.

3.9.8 Unless permission is given to preserve access roads to disposal areas adjacent to highways, such access roads shall be obliterated.

3.9.9 When the contract requires the removal of existing pavement but does not require recycling the contractor is encouraged to save this bituminous material for future reuse. This material is considered to be a valuable resource because of the residual asphalt contained in

it. Therefore, no existing bituminous pavement removed shall be incorporated in the embankment. It also must be disposed of in accordance with the Department of Environmental Services Waste Management Division regulations at no expense to the City.

3.10 Embankment in-place.

3.10.1 Embankment-in-place. It shall be the Contractor's responsibility to schedule the excavation so as to incorporate all suitable materials in the work. Premature use of the item of resulting in wasting of material will cause the deduction from the quantity as determined by the Engineer.

3.10.2 Sources. Unless otherwise designated in the contract, the Contractor shall make its own arrangements for obtaining material for embankment in place and shall pay all costs involved. All sources of material, whether within the right-of- way or elsewhere, shall be approved in writing before any material is removed. Permission to remove material beyond the template lines within the right-of-way and adjacent thereto will be contingent on many factors and if permission is granted, it will be given by the Engineer only after review by all interested parties. Permission may be contingent, among other considerations, upon consent of the Contractor to leave regular and uniform slopes in the area. Slopes excavated beyond the template lines without authorization shall be refilled when ordered at no expense to the City. When permission to remove material beyond the template lines within the right-of-way is granted, the unit price of that material will be contingent upon material type agreed upon prior to authorization.

3.11 If impervious material is used, it shall be placed in 6 in maximum lifts and shall be compacted to at least 95 percent of the maximum dry density. During compaction, the moisture content of the impervious material shall be between 1 percent below and 3 percent above the optimum moisture content. The maximum dry density and the optimum moisture content shall be as determined by AASHTO T 99 (Standard Proctor Test).

3.12 Manipulation of the soil, as specified in 203.3.8.1, shall be required before compaction when the material's moisture content is beyond the limits specified above.

Method of Measurement

4.1 Excavation, embankment-in-place, embankment-in-place surplus, , impervious material, and rehandling surcharge material will be measured by the cubic yard in accordance with 108.01. Material removed from outside of template lines without prior approval will not be measured.

4.1.1 When the Contractor is directed to excavate beyond the template lines shown, the material removed will be measured under the appropriate excavation item.

4.2 When the item of embankment-in-place is included in the proposal, no measurements of any borrow pits will be made for the purpose of establishing pay quantities for any item and the item of borrow will not appear in the proposal.

4.3 When the contract does not specifically provide for payment for embankment-in-place, the work of embankment construction will not be measured as such but will be considered incidental to the various classifications of excavation.

4.4 Surcharges will be sectioned in place immediately prior to removal, and the designed or revised subgrade template will be used as the final section.

4.5 Where presplitting is required, excavated rock will be measured only to the slope and depth lines shown on the plans or ordered.

4.6 Presplitting holes and extra drilled holes without explosives will be measured by the linear foot (linear meter), measured from the top of the drill hole at the rock surface to the bottom of the hole or to the elevation of the required subgrade (whichever is higher) or to an established bench elevation. Portions of holes not meeting the requirements as set forth in 3.3.5 or 3.3.9 will not be measured. Presplitting holes and extra drilled holes without explosives drilled where presplitting is not required by these specifications will not be measured.

4.7 Where presplitting is not required, actual overbreakage of rock in the slopes will be measured and allowed to a maximum of 24 inches (measured horizontally) beyond the required slope lines where adequate cross-sections have been taken of the original rock in accordance with the provisions of 3.2.1 and 3.3. No allowance for overbreakage will be made below the subgrade elevation.

4.8 Where the Engineer determines that the removal of additional rock is necessary due to conditions clearly not attributable to the Contractor's methods of operations, the payment lines will be adjusted to the limits ordered, to include only rock actually removed within such limits.

4.9 Impervious material will be measured by the cubic yard of material placed within the lines shown on the plans or as ordered.

Basis of Payment

5.1 The accepted quantities of excavation and embankment will be paid for at the contract price per cubic yard for each of the pay items listed below that is included in the contract, with the following stipulations:

5.1.1 The item of embankment-in-place will be paid only for those materials for which payment is not specified under a separate item.

5.1.2 When surcharges are required, that portion of the surcharge ordered removed will be paid for as rehandling surcharge material.

5.1.3 Excavation of unstable materials in the slopes of roadway cuts will be paid for as provided in Section 585 . Backfill of such slopes shall be with material meeting the requirements of Section 585 or approved ledge and will be paid under Section 585 unless otherwise shown on plans.

5.1.4 Topsoil excavation will be paid for as common excavation except when overlying muck excavation, in which case such topsoil excavation will be full payment for excavating, transporting and stockpiling surplus topsoil at approved locations.

5.1.5 Roadside ditches adjoining excavated areas will be paid for as common, rock, or unclassified excavation, as appropriate, unless such ditches are shown on the plans or ordered to be paid for under another item.

5.1.6 When conflicting pay lines for more than one type of excavation exist in an area, payment will be made to the limits of each type of excavation in the following order of priority unless otherwise indicated on the plans:

(1) Common, Rock, Muck, or Unclassified Excavation
(2) Channel Excavation
(3) Structure Excavation

5.1.7 Concrete class F, flowable fill, substituted for embankment will be paid for at the Contract unit price for the item substituted.

5.1.8 Excavation of unsuitable material beneath embankment areas or at subgrade will be paid for as common excavation, unless material is classified as rock, muck, structure or other excavation item. When the excavation is classified the payment for underlying unsuitable material will be made under the classified item.

5.1.9 Gravel backfill material as specified in 3.6.1(1), or (3) used to backfill unsuitable material excavation or muck excavation beneath embankment areas or at subgrade will be paid for under Item 304.2. Rock backfill as specified in 3.6.1 (2) or (3) will be paid as Item 203.6. Materials meeting the requirements of 3.6.1 (1), (2), or (3), used to backfill unsuitable materials in the slopes of roadway cuts will be paid as provided in 5.1.3 with no adjustment in the embankment-in-place final pay quantity.

5.2 No payment will be made for materials used to shim unauthorized over-excavated areas back to designed slope lines and subgrade, or for materials placed outside of designed or ordered slope lines.

5.3 No payment will be made under the item of embankment- in-place, nor deduction made for materials used to backfill holes left by the authorized removal of stumps, boulders and the like.

5.4 No separate payment will be made for aeration, or compaction equipment or methods of operation.

5.5 Except for any extra work which may be ordered, payment for embankment-in-place will include all work required in connection with pits.

5.6 When common excavation is the only class included in the contract, any rock encountered will be paid for at a price equal to 5 times the unit price for common excavation, under item number 203.2.

5.7 When no item for muck excavation is contained in the Contract, muck encountered and verified as meeting that definition will be paid for at 1.5 times the Contract unit price for common excavation as contained in the Contract or negotiated by change order when no common excavation item is contained in the Contract.

5.8 Benching or terracing performed under 3.7.3 will be subsidiary except that rock removed as ordered will be paid for under 203.2.

5.9 The accepted quantity of presplitting holes or extra drilled holes without explosives will be paid for at the contract unit price per linear foot, complete as specified, except that when no item for presplitting holes is included in the contract, such work will be subsidiary.

5.10 All costs incurred by the Contractor in maintaining a blasting log and in adopting revised blasting methods shall be considered incidental to the contract unit prices for rock excavation and presplit blasting.

5.11 The cost of all blast vibration control and monitoring, pre-blast condition surveys, post-blast surveys, blasting precautions, the use of borehole deviation equipment to measure the orientation of presplit hole, and other protective measures necessary to prevent damage and the subsequent creation of claims in connection with blasting shall be included under Item 203.2.

5.12 The accepted quantity of impervious material will be paid for at the contract unit price per cubic yard complete in place. (Overhaul will not be paid for.)

Pay Items and Units, Section 203 --Excavation And Embankment:

203.1	Common Excavation	Cubic Yard
203.2	Rock Excavation	Cubic Yard
203.3	Unclassified Excavation	Cubic Yard
203.4	Muck Excavation	Cubic Yard
203.5	Impervious Material	Cubic Yard
203.6	Embankment-in-place	Cubic Yard
203.61	Embankment-in-place surplus	Cubic Yard
203.7	Rehandling Surcharge Material	Cubic Yard
203.81	Presplitting Holes	Linear Foot
203.82	Extra Drilled Holes Without Explosives	Linear Foot

SECTION 206 --STRUCTURE EXCAVATION FOR PIPES AND OTHER MINOR STRUCTURES

Description

1.1 This work shall consist of the excavation and backfill or disposal when necessary of all materials required to be removed to complete the work as shown on the plans or ordered. Excavation for the following shall be included under this item; berm ditches, inlet ditches and outlet ditches, sand drains, drainage pipes, multiple pipe structures, sewer pipes, pipe sleeves, manholes, catch basins, drop inlets, headwalls, conduits and channels with less than a 10 foot bottom width. Excavation for roadway ditches not adjoining roadway excavation will be included in this item unless otherwise specified.

Classification of Materials

2.1 Common Structure Excavation shall consist of all excavation described above which is not classified as rock structure excavation. Glacial till or boulder clay will be considered as common structure excavation.

2.2 Rock structure excavation shall consist of all solid rock which cannot be removed without blasting or ripping. It shall also consist of boulders and parts of masonry structures when found to measure 1 cubic yard or more except as provided in 604.5.2.2

2.3 Unclassified structure excavation shall consist of all structure excavation encountered.

Construction Requirements

3.1 General

3.1.1 All excavations performed within City streets, rights-of-way and easements shall be governed by the City's Street Excavation Regulations, except as may be otherwise approved by the Engineer.

3.1.2 The contractor shall call DIG SAFE (811 or 1-888-DIG-SAFE) 72 hours prior to the start of excavation.

3.1.3 Where excavations are to be made through existing pavement, the pavement shall be saw cut ahead of the excavation in order to provide a clean uniform edge. The pavement shall be cut along lines A minimum of 12 inches outside of the trench walls in order to minimize undermining. All existing paved areas shall be restored in accordance with Part I, Section 5 - Street Excavation Requirements

3.1.4 All excavation shall be open cut, unless otherwise specified or permitted by the Engineer, and shall be removed to the limits shown or ordered. The excavated material shall be incorporated in the work or disposed of as directed. See also 209.2.1.6.

3.1.5 Excessive widths of trench will not be permitted. The walls of trenches shall be kept as nearly vertical as practicable below the level of the top of the pipes. Trenches shall be shored in accordance with OSHA Regulations.

3.1.6 Unauthorized excavation below the specified depths shall be backfilled with approved material as specified in Section 209 -- Bedding & Backfill.

3.1.7 Unsuitable material shall be removed to the limits directed and replaced with approved material as specified in Section 209 -- Bedding & Backfill.

3.1.8 Unless otherwise permitted by the engineer, no more than one hundred (100) feet of trench shall be open at any time and in dry ground, at least thirty (30) feet of trench shall be excavated to within six (6) inches of specified subgrade in advance of the pipe laying.

3.1.9 Excavated or other material shall not be stored nearer than four (4) feet from the edge of any excavation and shall be so stored as to prevent its falling or sliding back into the excavation.

3.1.10 Sides, slopes and faces of all excavations shall meet accepted engineering requirements by scaling, benching, barricading, rock bolting, wire meshing or other equally effective means. Special attention shall be given to slopes which may be adversely affected by weather or moisture content.

3.1.11 Sides of trenches in hard or compact soil including embankments, shall be shored or otherwise supported when the trench is more than five feet in depth and eight feet or more in length. In lieu of shoring, the sides of the trench above the five foot level, may be sloped to preclude collapse, but shall not be steeper than one foot rise to each one half (1/2) foot horizontal. When the outside diameter of a pipe is greater than six feet, a bench of four feet minimum shall be provided at the toe of the sloped portion.

3.1.12 In locations where oxygen deficiency or gaseous conditions are possible, air in the excavation shall be tested. Controls shall be established to assure acceptable atmospheric conditions. When flammable gasses are present, adequate ventilation shall be provided or sources of ignition shall be eliminated. Attended emergency rescue equipment, such as breathing apparatus, a safety harness and line, basket stretcher etc., shall be readily available where adverse atmospheric conditions may exist or develop in an excavation.

3.1.13 Where people are required to be in trenches four (4') feet deep or more, ladders extending from the floor of the trench excavation to at least three (3') feet above the top of the excavation shall be provided and located to provide means of exit without more than twenty-five (25') feet of lateral travel.

3.2 Sheeting

3.2.1 The contractor shall be held responsible for the sufficiency of all sheeting and bracing used and for all damage to persons or property resulting from the improper quality, strength, placing, maintaining or removing of the same.

3.2.2 The engineer may require that structural calculations relative to supporting systems, i.e., piling, cribbing, shoring etc., be done by an engineer registered in the State of New Hampshire who shall be engaged as the contractor's representative. The engineer may also require that such shoring, bracing or underpinning be inspected daily or more often as conditions warrant, by the engineer in the employ of the contractor in order to insure that the protection is effectively maintained.

3.2.3 While the contractor is responsible for the safety of trenches, the engineer may require additional support for trench walls in the form of sheeting, walling and bracing whenever in his opinion, the safety of personnel, utilities, the work or property requires it.

3.2.4 Sheeting may be timber or steel adequately walled and braced as approved by the Engineer. Materials used for sheeting, sheet piling, cribbing, bracing, shoring and underpinning, shall be in good serviceable condition and timbers shall be sound, free from large or loose knots and of proper dimensions.

3.2.5 The use of trench boxes shall not be permitted in areas where any part of the foundations of adjacent structures are within an area determined by a line drawn from the trench bottom to the ground surface at a 1:1 slope. Where the stability of adjoining buildings or walls may be endangered by excavations, shoring, bracing or underpinning shall be provided as necessary to ensure their safety.

3.2.6 If it is necessary to operate heavy equipment or store heavy materials on a level above and near an excavation, the side of the excavation shall be sheet piled, shored and braced as necessary to resist the extra pressure due to such superimposed loads.

3.2.7 Sheeting shall be driven ahead of the excavation to avoid loss of material from behind the sheeting. If voids occur behind the sheeting they shall be immediately filled with approved material and compacted.

3.2.8 When tie rods are used to restrain the top of sheeting or other retaining systems, the rods shall be securely anchored well back of the angle of repose.

3.2.9 When tight sheeting or sheet piling is used, full loading due to groundwater table shall be assumed unless prevented by weep holes, drains or other means.

3.2.10 Additional stringers, ties and bracing shall be provided to allow for any necessary temporary removal of individual supports.

3.2.11 All sheeting and bracing not left in place shall be carefully removed so as not to disturb or endanger the work or other structures. All voids shall be immediately backfilled with approved material and compacted. Where sheeting is ordered to be left in place, it shall be cut off at least three feet below finished grade, but no less than one foot above the top of the pipe.

3.3 Rock Structure Excavation

3.3.1 Where bedrock or other incompressible material is encountered, it shall be removed as shown in Figure 206- 2

3.3.2 When blasting is required, the provisions of 203.3.2 shall apply as though contained in this Section.

Method of Measurement

4.1 Structure excavation will be measured by the cubic yard in accordance with 108.01.

4.1.1 The lower limits shall be 6 inches below the bottom of the outside of the pipe barrel or structure in earth and 12 inches below the bottom of the outside of the pipe barrel or structure in rock, as designated in Figure 209- 1, or as provided below. (The term "bottom of the outside of the pipe barrel" shall mean the nominal manufactured wall thickness of the wall below the flow line, with nothing extra for bells and beads.) The upper limits shall be the original ground or rock surface. Common structure excavation for pipes, manholes, catch basins and drop inlets shall be subsidiary except as provided below.

4.1.1.1 The depth of unsuitable material removed as directed below grade will be measured for payment. In case the width ordered is wider than the specified payment limits in 4.1.2, the extra excavation will be measured in accordance with Figure 206- 1

4.1.1.2 When excavation is required to place the pipe or structure more than 1 foot deeper than the excavation shown on the plans, the depth of excavation below such limit will be measured for payment.

4.1.2 Unless otherwise shown on the plans, the horizontal limits shall be as follows for pipes:

Table 206- 1
Horizontal Excavation Limits for Pipes

Inside Diameter	Total Width
Up to 12 inches	36 inches
12 inches to 24 inches	I.D. + 24 inches
Over 24 inches	2 x I.D.

4.1.3 The horizontal limits for end sections shall be the same as the pipe to which they are attached.

4.1.4 The horizontal limits for structures such as manholes, catch basins, headwalls and the like will be 1 foot outside of the base of the masonry and parallel or concentric hereto.

4.2 All material classified as rock encountered within the neat lines established under this section will be measured. No payment will be made for any overbreakage below or beyond the limits specified.

4.3 In case a conflict of horizontal limits exists in payment lines as where a pipe enters a manhole, the greater limit will be used for computing the quantity.

4.4 Sheeting where ordered and/or approved satisfactorily driven, waled and braced will be measured by the engineer in place, by the square foot from the bottom of the trench excavation to the top of sheets or existing grade, whichever is less. Each side of the trench shall be measured for payment.

4.5 Sheeting left in place where ordered and/or approved and satisfactorily driven will be measured by the engineer by the square foot from the bottom of the trench to the top of sheet left in place. Each side of the trench shall be measured for payment.

4.6 Unclassified structure excavation for exploratory purposes will be measured as provided under the applicable provisions of 4.

Basis of Payment

5.1 The accepted quantity of excavation will be paid for at the contract unit price per cubic yard complete in place.

5.2 Backfill or bedding material specified or ordered will be paid for under Section 209 -- Bedding & Backfill.

5.3 When common structure excavation is the only class included in the contract, any rock encountered will be paid for at a price equal to five times the unit price for common structure excavation under Item 206.2.

5.4 When structure excavation items are included in the contract, but no items for exploratory purposes are in the contract, payment for excavation made for investigations or exploratory purposes will be paid for under Item 206.19 at five times the unit price for the class of excavation encountered.

5.5 If neither 206.1 nor 206.2 nor an item for exploratory purposes is included in the contract, any structure excavation encountered, including excavation for investigation or exploratory purposes, will be paid in accordance with the provisions of 108.04 (extra work).

5.6 The contractor will be paid the contract unit price per square foot of sheeting and/or sheeting left in place which price shall constitute full compensation for all materials, labor, equipment and incidental work necessary for the satisfactory completion of this work.

5.7 When structure excavation is specified as included in another item, no separate payment will be made for such work in connection with that item.

5.8 No separate payment will be made for pre-blast and post blast surveys or blasting monitoring work.

Pay Items and Units, Section 206 --Structure Excavation For Pipes And Other Minor Structures:

206.1	Common Structure Excavation	C.Y.
206.19	Common Structure Excavation, Exploratory	C.Y.
206.2	Rock Structure Excavation	C.Y.
206.3	Sheeting	S.F.
206.39	Sheeting Left-in-place	S.F.
206.4	Unclassified Structure Excavation, Exploratory	C.Y.

UNSUITABLE EXCAVATION

CROSS HATCHED AREAS SHOWN
ARE PAYMENT AREAS

Tw = TRENCH WIDTH PER 206.4.1.2
W = Tw+2H
H = DEPTH OF EXCAVATION
BELOW LOWER LIMIT

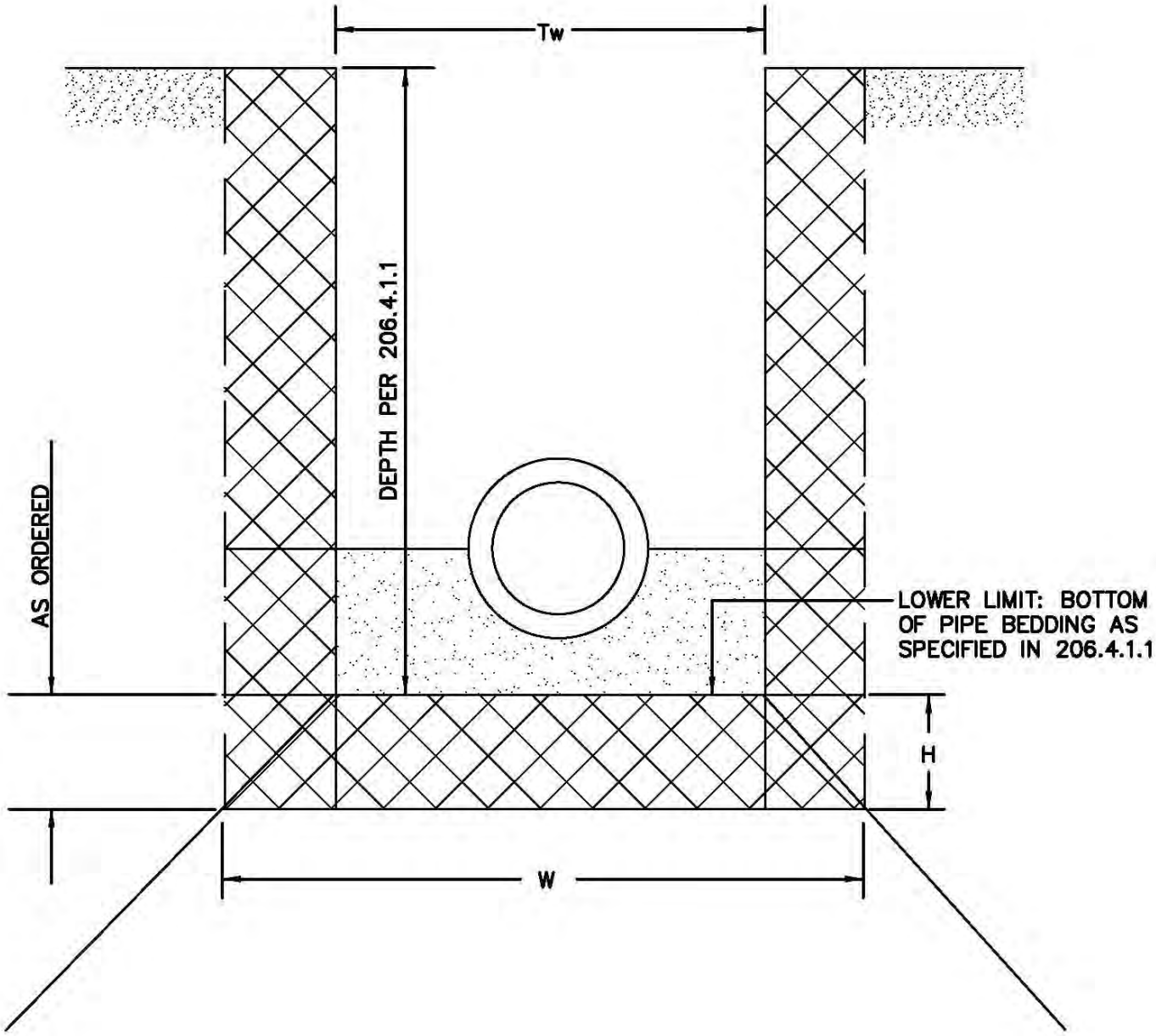

UNSUITABLE EXCAVATIONS

S:\DWG\DETAILS\206-1 CLVRT-UE.DWG

NOT TO SCALE
FIGURE 206-1

ROCK

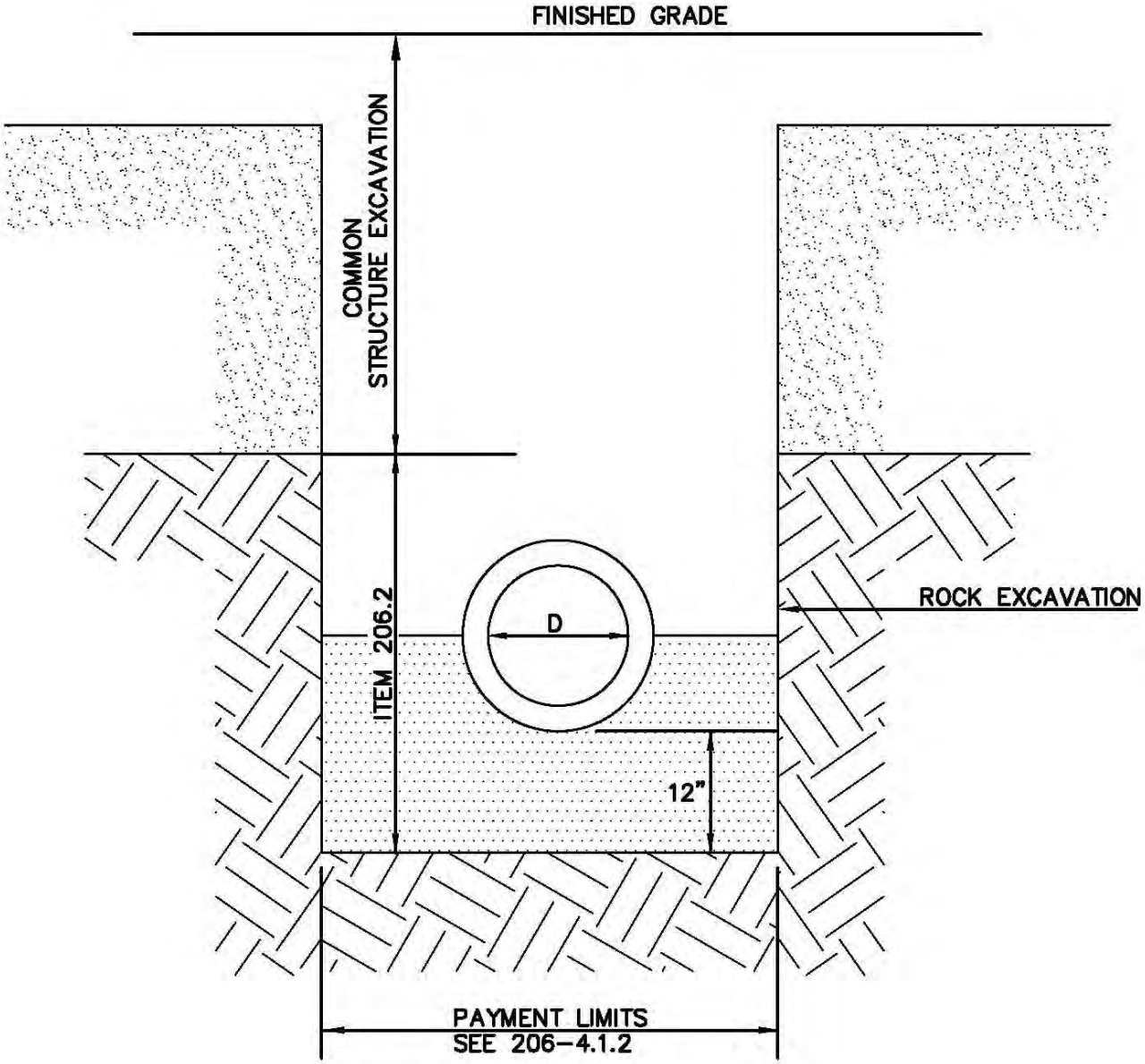

CULVERT DETAILS

S:\DWG\DETAILS\206-2 ROCK

NOT TO SCALE

FIG. 206-2

EARTH

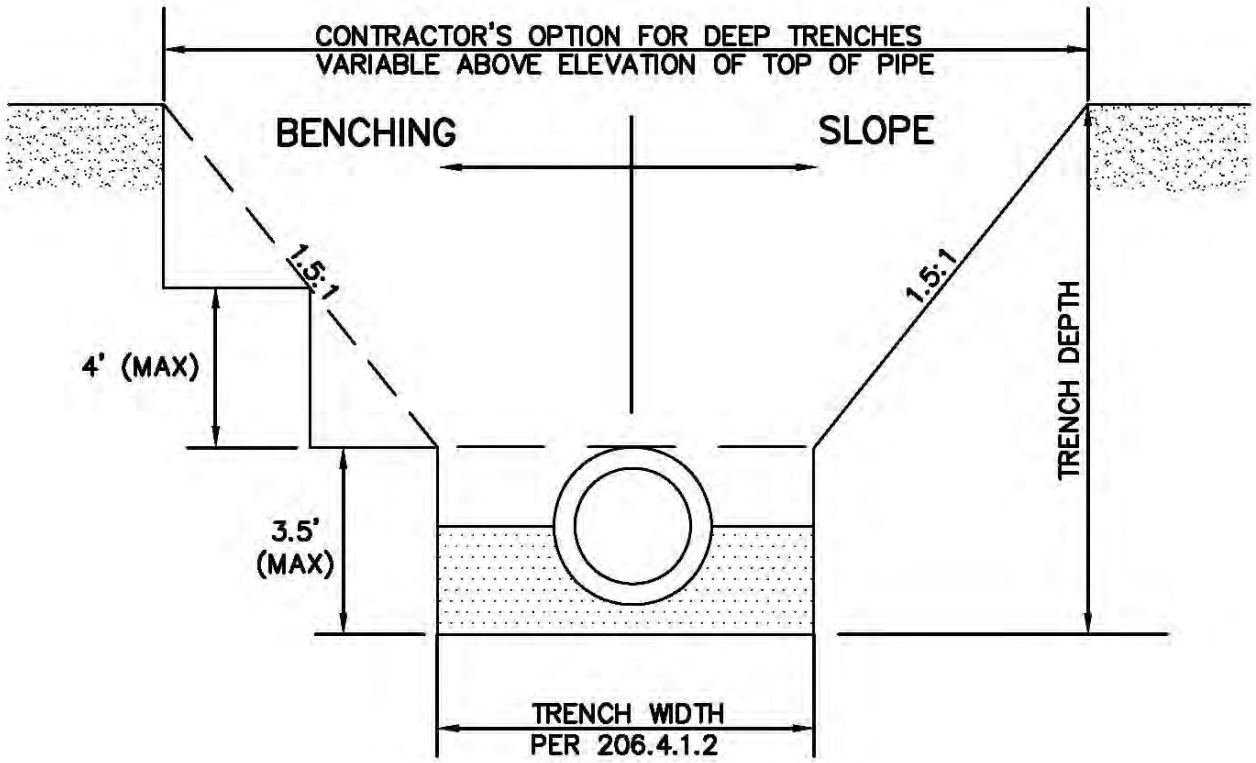

NOTES:

1. ALL TRENCHING AND BENCHWORK SHALL FOLLOW OSHA SAFETY STANDARDS.
2. TRENCH DEPTH NOT TO EXCEED 20 FEET FOR EITHER METHOD
3. STEEPER SLOPES MAY BE PERMITTED IF THE ENGINEER DETERMINES THE SOIL WILL ALLOW IT.

TRENCH EXCAVATION DETAILS

NOT TO SCALE

FIG. 206-3

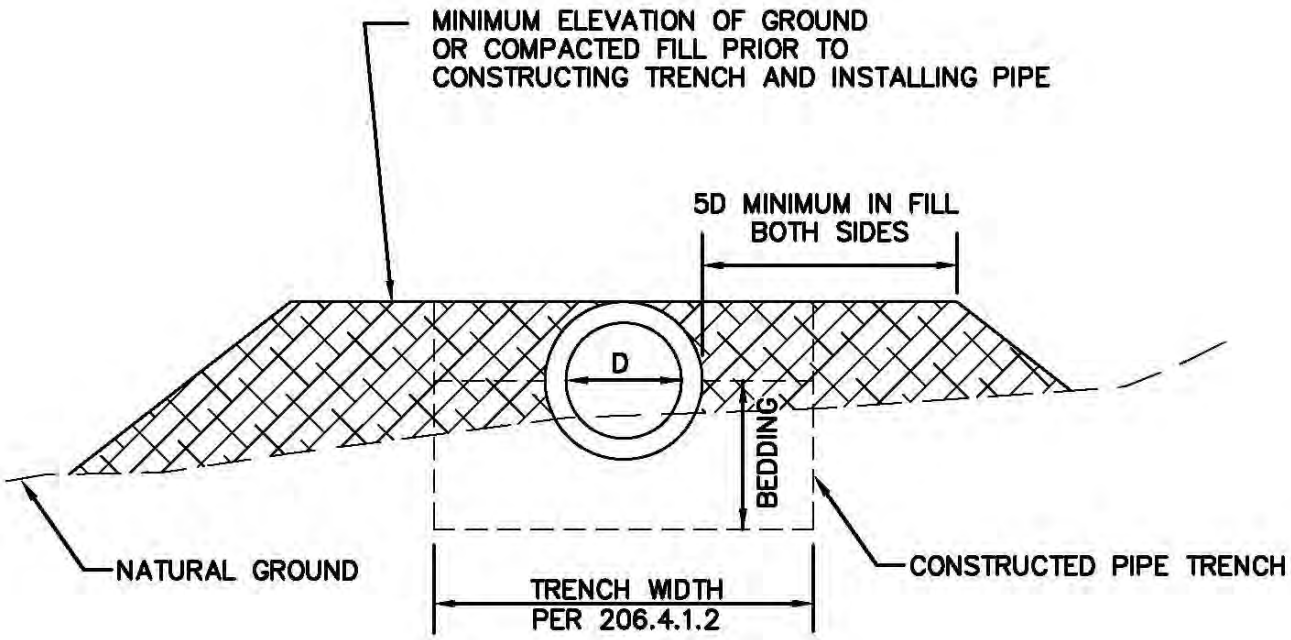

PIPE DETAILS

S:\DWG\DETAILS\206-4 PIPE.DWG

NOT TO SCALE

FIG. 206-4

SECTION 209 -- BEDDING & BACKFILL

Description

1.1 This work shall consist of furnishing and placing bedding and backfill under and around pipes and other minor structures at the locations shown on the plans or ordered.

Materials

2.1 The materials shall consist of stones, rock fragments and fine hard durable particles resulting from the natural disintegration of rock. Materials that break up when alternately frozen and thawed or wetted and dried shall not be used for bedding or backfill. The materials shall be free from injurious amounts of organic material and shall conform to the following gradations:

2.1.1 Sand. One-hundred (100) percent shall pass the one (1) inch sieve, Eighty-five to one hundred percent shall pass the No. 4 sieve and not more than five percent of the material passing the No. 4 sieve shall pass the No. 200 sieve.

2.1.2 Washed Sand. One-hundred (100) percent shall pass the 1/4 inch sieve, ninety-five to one hundred percent shall pass the No. 4 sieve, eighty to one hundred percent shall pass the No. 8 sieve, fifty to eighty percent shall pass the No. 16 sieve, twenty-five to sixty percent shall pass the No. 30 sieve, ten to twenty- five percent shall pass the No. 50 sieve, two to ten percent shall pass the No. 100 sieve, and not more than three percent of the material shall pass the No. 200 sieve. Material shall be a washed, clean, hard, coarse sand with a final water content not exceed to 5% by weight

2.1.3 Stone Bedding. One hundred percent shall pass the one (1) inch sieve, ninety to one hundred percent shall pass the three quarter (3/4) inch sieve, twenty to fifty-five percent shall pass the three eights (3/8) sieve, zero to ten percent shall pass the No. 4 sieve and zero to five percent shall pass the No. 8 sieve.

2.1.4 Granular Backfill. Not more than 15 percent of the material passing the No. 4 sieve shall pass the No. 200 sieve and the material shall conform to the following gradations.

2.1.4.1 Granular backfill-sand shall consist primarily of particles with 100 percent passing the 3 inch sieve and 70 to 100 percent passing the No. 4 sieve.

2.1.4.2 Granular backfill-gravel shall consist of a mixture of stones or rock fragments and particles with 95 to 100 percent passing the 3 inch sieve and 25 to 70 percent passing the No. 4 sieve.

2.1.5 Crushed stone shall be one-half (1/2) inch or three quarter (3/4") inch in size.

2.1.6 Backfill material shall consist of material excavated during the course of construction or suitable material from another source, as determined by the engineer.

2.1.6.1 Concrete class F, flowable fill may be requested in writing as a substitute for granular backfill. Approval shall be in consideration of, but not limited to, differential frost heaving due to dissimilar materials, unit weight, structural requirements, lack of permeability, and damming resulting from water flow cut off.

Construction Requirements

3.1 Bedding.

3.1.1 Bedding material for sewers shall be crushed stone as ordered by the Engineer and shall meet the requirements of 2.1.3. Bedding material for reinforced concrete drain pipes shall be granular backfill meeting the requirements of 2.1.4 and approved by the Engineer.

3.1.2 The minimum depth of bedding shall be six (6) inches below the bottom of the outside of the pipe barrel or structure in earth and twelve (12) inches below the bottom of the outside of the pipe barrel or structure in rock. See 206.4.

3.1.3 Bedding material shall be spread the full width of the trench and shall extend up to a level of one half (1/2) the diameter of the pipe barrel.

3.1.4 Care shall be exercised to thoroughly compact the bedding under the haunches of the pipe and to insure that the bedding is in intimate contact with the sides of the pipe.

3.2 Sand Blanket.

3.2.1 Sand blanket material required for installation of the sewer mains, services, and appurtenances shall meet the following gradation requirements, 100% shall pass the one half (½) inch sieve and a maximum of 15% shall pass the No. 200 seive.

3.2.2 For sewers, sand cushion material shall be spread the full width of the trench and shall extend a minimum of twelve (12") inches above the top of the outside of the pipe barrel or as approved.

3.3 Backfill.

3.3.1 Backfill material shall be free from debris, pieces of pavement, frozen material, organic matter, topsoil, clay and pieces of ledge or rocks larger than twelve (12) inches.

3.3.2 Backfill materials shall be placed in compacted layers not to exceed a depth of 6 inches.

3.3.3 Care shall be taken to ensure that the first 2 to 3 feet of backfill above the sand cushion over polyvinyl chloride (PVC) pipes is placed carefully rather than dropped, so as to avoid damaging the pipe from impact during placement.

3.4 Compaction.

3.4.1 All bedding, sand cushion and backfill materials shall be compacted at near optimum moisture content, in layers not exceeding 12 inches in compacted thickness, by pneumatic tampers, vibratory compactors, or other approved means. Care shall be exercised to thoroughly compact the bedding material under the haunches of the pipe and to insure that the compacted backfill is in direct contact with the sides of the pipe. Bedding and backfill materials shall be compacted to not less than 95 percent of AASHTO T99, Method C.

Method of Measurement

4.1 Bedding and backfill materials will be measured by the cubic yard of compacted material placed within the lines shown on the plans or as ordered.

4.2 Backfill of over-excavated areas beyond or below the lines and grades shown or ordered will not be measured for payment.

4.3 No deduction will be made from bedding and backfill of the volume occupied by the pipe.

Basis of Payment

5.1 The accepted quantity of bedding and backfill materials will be paid for at the contract unit price per cubic yard complete in place.

5.2 No extra payment will be made for suitable backfill material from another source when such material is ordered by the Engineer. See 209.2.1.6.

5.3 When bedding and backfill are included in another item, no separate payment will be made for such material in connection with that item.

5.4 Concrete class F, flowable fill substituted for granular backfill will be paid for at the Contract unit price for granular backfill of the type specified.

Pay Items and Units, Section 209 -- Bedding & Backfill :

209.1	Sand for Sand Cushion	Cubic Yard
209.15	Washed Sand	Cubic Yard
209.2	Stone Bedding	Cubic Yard
209.3	Granular Backfill (Sand)	Cubic Yard
209.4	Granular Backfill (Gravel)	Cubic Yard
209.650	1/2" Crushed Stone	Cubic Yard
209.675	3/4" Crushed Stone	Cubic Yard

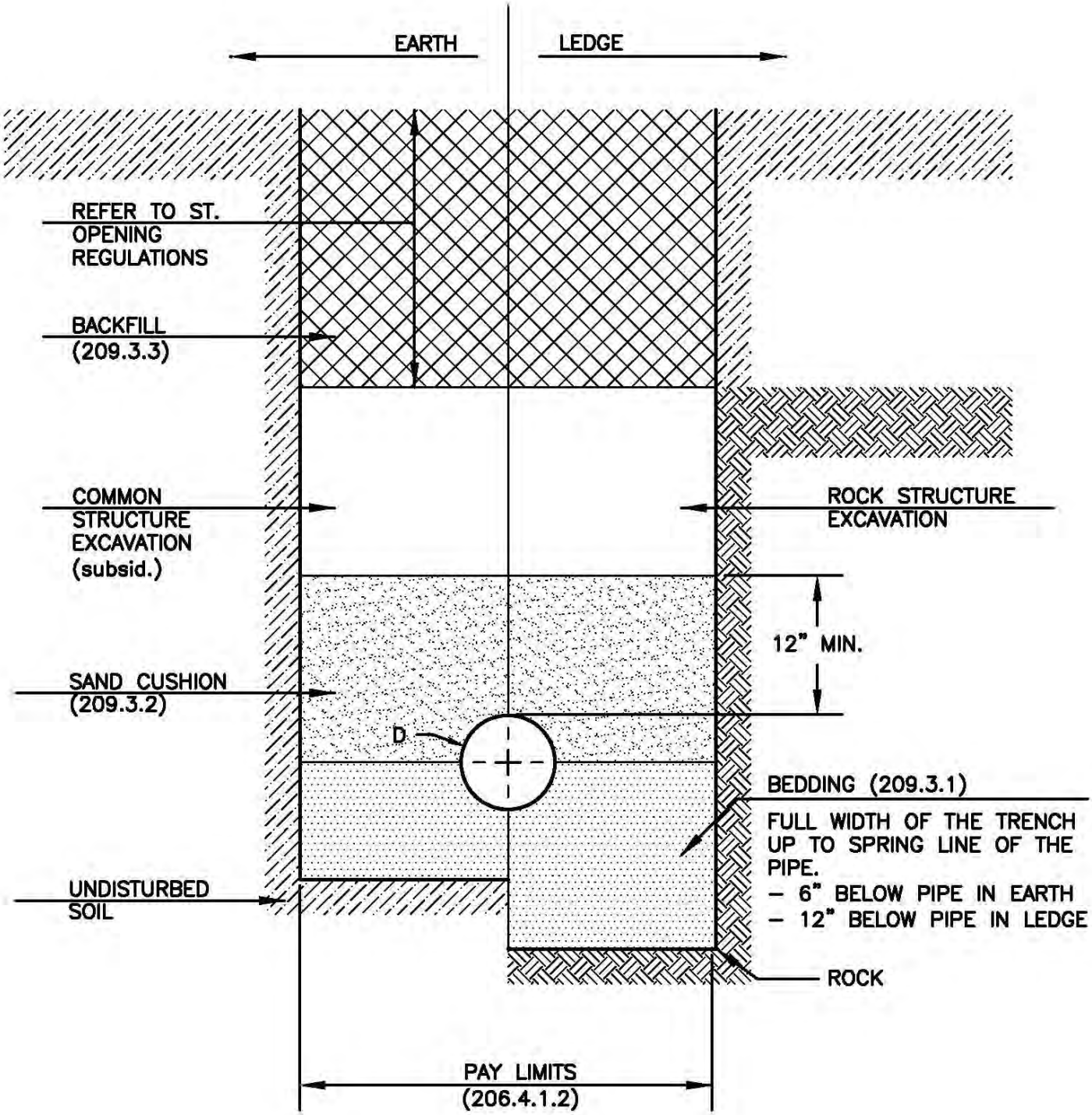

EXCAVATION PAY LIMITS FOR TRENCHES

S:\DWG\DETAILS\209-1 PayLimits.dwg

NOT TO SCALE

FIGURE 209-1

SECTION 214 -- FINE GRADING

Description

1.1 This work shall consist of the final grading necessary to make the subgrade, the area under the surface course, the roadway outside the surface course, and other locations as directed by the Engineer conform to the lines shown on the plans or established by the Engineer.

Construction Requirements

3.1 The surface of each course of material shall be fine graded to conform to the typical section of the plans prior to placing the succeeding course. Each course shall be fine graded to conform to the lines and grades as shown on the plans. When fine grading to a specific slope prior to paving, the slope tolerance will be +/-0.4%.

3.1.1 The use of automated grade and slope control will be required on all graders.

3.1.2 On projects or parts of projects where the Engineer deems that the use of automatic controls is impracticable, some or all of the controls in 3.1.1 may be waived.

3.2 Shoulders, slopes, and ditches shall be shaped with suitable machinery supplemented by hand labor to reasonably smooth surfaces that will be in keeping with the character of the adjacent terrain and merge into it without any noticeable break. Culverts and waterways shall be cleared of all obstructions. Rubbish, brush, loose rock, boulders, and all other debris from the construction work shall be removed and disposed of as directed.

3.3 To be acceptable under this item, the entire project area must present a uniformly finished appearance at the completion of the work.

3.3.1 The Contractor shall give 24 hour notice of the expected completion of the final fine grading prior to paving, to allow inspection by the Engineer.

Method of Measurement

4.1 Fine grading will be measured as a unit. If the project is altered to require substantial changes in the length, width, or character of the fine grading from such length, width, or character shown on the plans, the contract lump sum price will be subject to a negotiated revision.

Basis of Payment

5.1 The accepted quantities will be paid for at the contract lump sum price for fine grading not otherwise classified.

5.2 When no quantity for this item is included in the contract, this work shall be subsidiary.

Pay Items and Units, Section 214 -- Fine Grading:

214	Fine Grading	Lump Sum

DIVISION 300 – BASE COURSES

SECTION 304 -- AGGREGATE BASE COURSE

Description

1.1 This work shall consist of furnishing and placing base courses on a previously prepared subgrade or course as shown or ordered.

1.2 This work shall also include raising the grade of the edge of the roadway shoulders with crushed aggregate as shown on the plans or as ordered to match the grade of the pavement course placed on the shoulders or to provide a base for shoulder pavement.

Materials

2.1 General.

2.1.1 The materials shall consist of hard durable particles or fragments of stone or gravel. Materials that break up when alternately frozen and thawed or wetted and dried shall not be used for aggregate base course materials. Fine particles shall consist of natural or processed sand. The materials shall be free from injurious amounts of organic material. Unless otherwise specified, the percent wear of the base course material shall not exceed 50 percent as determined by AASHTO T 96, Grading A.

2.1.2 Crushed stone and crushed ledge rock shall be processed material obtained from a source which has been stripped of all overburden. The processed material shall consist of clean durable fragments of ledge rock of uniform quality reasonably free of thin or elongated pieces.

2.2 Gradation. The required gradation of base course material shall conform to Table 304- 1. The required gradation of recycled bituminous pavement shall conform to 306.2.1.1.

2.3 Sand. The maximum size of any stone or fragment shall not exceed 3/4 of the compacted depth of the layer being placed but in no case larger than 6 inches.

2.4 Gravel. The maximum size of stone particles shall not exceed 3/4 of the compacted thickness of the layer being placed but in no case larger than 6 inches.

2.5 Crushed gravel. At least 50 percent of the material retained on the 1 inch sieve, shall have a fractured face.

2.6 Crushed gravel for shoulder leveling. This material shall consist of crushed aggregate or a blend of crushed aggregate and reclaimed asphalt or concrete material. Reclaimed Asphalt Pavement (RAP) and /or Reclaimed Concrete Aggregate (RCA) may be blended up to 75% by volume with crushed aggregate. The crushed aggregate shall meet the gradation requirements of Item 304.32 in Table 304- 1 prior to blending with reclaimed materials. The reclaimed materials shall meet the requirements of 2.6.1 or 2.6.2 as applicable prior to blending with crushed aggregate.

2.6.1 RAP for this purpose shall be processed by either crushing or screening such that 100% of the material passes the 1" sieve. Screening will only be allowed if the source of the RAP is pavement millings from cold planning bituminous surfaces.

2.6.2 RCA shall meet the requirements of AASHTO M 319, except for its gradation requirements. 100% of the material shall pass the 1" sieve

2.7 Crushed Aggregate for Shoulders. This materialshall meet the gradation requirements in Table 304- 1.

2.8 Crushed gravel for unpaved drives. This item shall be used for the surface course of drives which are not designated to be paved. The material shall meet the gradation requirements of either crushed gravel or crushed stone (fine) as shown in Table 304- 1.

2.9 Crushed stone base course (fine gradation). Acceptable sand may be blended as necessary to obtain the proper gradation for the fine aggregate portion.

2.10Crushed stone base coarse (coarse gradation). Acceptable sand may be blended as necessary to obtain the proper gradation for the fine aggregate portion.

2.10.1 The substitution of crushed stone meeting the gradation requirements of crushed stone base course (fine gradation) for all or part of this item will not be permitted.

2.11Recycled bituminous pavement. Additional crushed gravel added shall meet the requirements of Table 304- 1. Additional asphalt shall meet the requirements of Section 702 , as specified.

Construction Requirements

3.1 General.

3.1.1 Upon approval, base course materials found within the project limits may be used under the specific item in accordance with 103.04 of these specifications.

3.1.2 Permission may be given to substitute gravel or a mixture of sand and gravel for any sand course when sand is designed as part of the base. The substitution must be made across the entire section and will not be allowed for short or discontinuous segments.

3.1.3 Permission may be given to substitute crushed gravel for gravel or crushed stone (fine gradation) for crushed gravel provided there is a minimum of 1 ft of free draining material (sand, gravel or crushed stone coarse) below the crushed stone.. The substitution must be made across the entire section and will not be allowed for short or discontinuous segments.

3.1.3.1 Permission may be granted to use reclaimed stabilized base in lieu of crushed gravel or crushed stone base course (fine gradation) provided the following requirements are met:

a) The material meets the requirements of Section 306 -- Reclaimed Stabilized Base.
b) Must have free draining material below the repalccement material as described in 3.1.3
c) The approved material shall be applied across the entire cross-section at a constant depth. Short or discontinuous sections as determined by the Engineer will not be allowed.
d) Transitions between reclaimed asphalt and crushed gravel or crushed stone (fine gradation) shall be made using a 50 ft taper.
e) Reclaimed asphaltic material shall be placed directly under the proposed pavement.

3.1.3.2 Also, permission may be granted to use reclaimed asphalt pavement blended with granular material meeting the requirements of 304 in lieu of crushed gravel or crushed stone base course (fine gradation) providing that all requirements outlined in 3.1.3.1 are met.

3.1.3.3 Crushed stone (coarse) may be substituted for gravel provided that all crushed gravel above the crushed stone is replaced with a combination of crushed stone coarse and fine with the top layer consisting of a minimum of six inches of crushed stone fine. The substitution must be made across the entire section and will not be allowed for short or discontinuous segments

3.1.4 Crushed aggregate base course material shall be produced and placed in its final location with as little segregation as possible.

3.1.5 Unless otherwise directed by the Engineer, reclaimed stabilized base material shall not be substituted for crushed aggregate for shoulders in areas contiguous to residences and other existing landscaped areas where the growth of grass is desired.

3.2 Aggregate Crushing Plant.

3.2.1 The equipment for producing crushed gravel shall be of adequate size and with sufficient adjustments to produce the required materials without unnecessary waste. The plant shall be capable of removing excess fines. The engineer may order final screening of crushed aggregate if flat and elongated pieces are present in objectionable amounts.

3.2.2 The equipment for producing crushed stone and crushed ledge rock shall consist of sufficient units with sufficient adjustments to produce the required material. The plant shall be capable of removing undesirable material and excess fines. In order to meet the required gradation, the Contractor may produce acceptable material in one operation or combine coarse and fine piles through a proportioning hopper to create a combined stockpile.

3.3 Stockpile Construction.

3.3.1 All crushed aggregate base course materials will be stockpiled. The engineer shall be notified in advance as to when the manufacturing and stockpiling of crushed aggregate is to be started.

3.3.2 A stockpile equal to at least 20 percent of the bid quantity shall be constructed before the hauling and placing phase of the work begins and that quantity shall be maintained until approximately 80 percent of the bid quantity has been placed.

3.3.3 Stockpiles shall be constructed in layers to minimize segregation. The desired optimum thickness of layers is 4 feet; in no instance shall the thickness be more than 10 feet. Each layer shall be completed before the next layer is started. Construction of stockpiles by the direct use of a fixed conveyor belt system or by dumping over a bank will not be permitted.

3.4 Placing.

3.4.1 The subgrade or preceding course shall be brought to the specified crown and grade and maintained in a smooth condition free from holes and ruts. If the hauling equipment should cause ruts in the subgrade or previously placed base course, the equipment shall be operated only on the course being placed behind the spreading equipment.

3.4.2 Care shall be taken to avoid segregation during placement. When base course material is dumped in piles, it shall be dumped on the course being placed and spread at once onto the previously placed layer. If spreading equipment is not available, dumping will not be permitted. Any segregation which occurs shall be remedied or the materials removed and replaced at no additional cost to the City.

3.4.3 The Contractor's method of operation shall be such that oversized stones will not be delivered to the project.

3.4.4 When the base course is to be surface-treated and no pavement is to be laid upon it, stones having any dimension greater than 3 inches shall be removed from the upper 4 inches of the top layer.

3.4.5 Prior to fine grading, hard spots in the surface of the top layer shall be eliminated by scarifying the top 4 inches.

3.4.6 Crushed gravel for shoulder leveling shall be spread uniformly along the area adjoining the edge of the pavement. The material shall be spread along both sides and under guardrail where there is no curb.

3.4.6.1 Reclaimed stabilized base material utilized in shoulders greater than 1½", in any direction, shall not be exposed after placement.

3.4.7 To prevent segregation of crushed aggregate during spreading and to assist in obtaining the required density of the mixture, water shall be added to the crushed aggregate prior to performing the grading operations. The course shall be maintained in the moist condition during grading operations.

3.4.8 Crushed aggregate shall be hauled from an approved stockpile. Placing material obtained directly from the conveyor to the roadway without first stockpiling will not be permitted.

3.4.9 The base course material shall be spread in the amount necessary for proper consolidation and shall be shaped true to grade and cross section by means of power graders or other approved equipment.

3.4.10 Surface voids in crushed stone base course (fine gradation) shall be eliminated by the addition of filler material to just fill the voids. Any surplus filler material shall be removed. The finished surface shall be uniform, true to grade, and free from segregation. The Contractor shall furnish and place filler material to correct any visible segregation prior to paving. The filler material shall be spread, scarified if required, into the course and recompacted to the required density. Filler material shall meet the gradation requirements of sand. The final gradation of crushed stone base course (fine gradation) shall meet the requirements of Table 304- 1.

3.5 Testing for Gradation.

3.5.1 Sampling procedure shall conform to AASHTO T 2. Testing procedure shall be in accordance with AASHTO T 27. Materials not meeting the gradation requirements shall not be placed on the road.

3.5.2 The amount of material finer than the #200 sieve shall be determined according to AASHTO T 11 which specifies dry sieving after washing. Samples for acceptance testing of the material in place will be taken as the spreading operations progress on each lift just prior to the beginning of the compaction operations on that lift. For a preliminary determination of compliance with the specification for gradation, samples of sand and gravel may be taken from the pit and samples of crushed aggregate may be taken from the stockpile or from the final phase of the crushing operation.

3.5.3 Previously tested and accepted material contaminated by earthen, organic, or other foreign matter, or degraded by hauling equipment, to such an extent that the material no longer meets the gradation requirements, shall be removed and replaced or otherwise made acceptable at the Contractor's expense.

3.6 Compaction.

3.6.1 Unless shown on the plans or ordered otherwise, the compacted depth of sand courses shall not exceed 12 inches. The compacted depth of any layer of gravel, crushed gravel or crushed stone placed shall not exceed 8 inches

3.6.2 Compaction of base course material shall be done with approved vibratory rollers and adequate water to meet the requirements of 3.7. Rolling and shaping shall continue until the required density is attained.

3.6.3 Rolling and shaping patterns shall begin on the lower side and progress to the higher side of the course while lapping the roller passes parallel to the centerline. Rolling and shaping shall continue until each layer conforms to the required grade and cross section and the surface is smooth and uniform.

3.6.4 Water shall be uniformly applied over the base course materials during compaction in the amount necessary for proper consolidation.

3.6.5 When vibratory equipment is being operated, the amplitude of vibrations will be adjusted as necessary to avoid causing damage to adjacent buildings and property.

3.6.6 Except at inaccessible locations, such as near guardrail, material used for shoulder leveling shall be set with a pneumatic-tired roller or vehicle.

3.7 Density Testing.

3.7.1 The density of sand courses shall be determined by AASHTO T 191 (Sand Cone Method), AASHTO T 204 (Drive Cylinder Method), or AASHTO T 238 (Nuclear Methods). The density shall not be less than 95 percent of the maximum density determined in accordance with AASHTO T 99 (Proctor Density) or a control strip. See 3.8.

3.7.2 The density of gravel and crushed gravel courses shall be determined by AASHTO T 191 (Sand Cone Method), or AASHTO T 238 (Nuclear Methods). The density of crushed stone base courses will be determined by the Nuclear Method. The density shall not be less than 95 percent of the maximum density as determined by AASHTO T 99 (Proctor Density) or a control strip. See 3.8.

3.8 Control Strip Procedure.

3.8.1 At the beginning of the compaction operation a control strip of at least 100 lineal feet in length and span the width of the section being placed shall be constructed. The density requirement shall be determined by compacting the control strip at a suitable moisture content until no further increase in density can be measured. The remainder of the course shall be compacted to a density not less than 95 percent of the maximum control strip density, as measured by the nuclear density testing equipment. A new control strip will be

required when there is a significant change in the gradation of the material being placed, or a change in compaction equipment. Compaction of the control strip shall be done with approved vibratory rollers or compactors capable of producing a dynamic force of at least 27,000 pounds.

3.9 Winter Construction.

3.9.1 Base course materials shall not be placed on or above frozen material if the depth from the top of the contemplated course to the bottom of the frozen material would exceed 2-1/2 feet.

3.9.2 If the density requirements are not attained for any layer before the material freezes, no further material shall be placed on that layer.

Method of Measurement

4.1 Base course materials will be measured by the cubic yard of compacted material placed within the lines shown on the plans or as ordered.

4.2 Shoulders leveled with material in accordance with this specification will be measured by the ton.

4.2.1 Reclaimed stabilized base material used for crushed gravel for shoulder leveling shall be measured by the cubic yard using average lengths, widths and depths of the area to be filled or as provided in 4.3 as determined by the Engineer.

Basis of Payment

5.1 The accepted quantity of base course materials will be paid for at the contract unit price per cubic yard complete in place.

5.2 Filler material used to eliminate voids in crushed stone base course (fine gradation) shall be subsidiary.

5.3 The accepted quantity of crushed aggregate for shoulders will be paid for at the Contract unit price per cubic yard of material delivered and used on the project. The accepted quantity of crushed gravel for shoulder leveling will be paid for at the Contract unit price per ton delivered and used on the project.

Pay Items and Units, Section 304 -- Aggregate Base Course :

304.1	Sand	Cubic Yard
304.2	Gravel	Cubic Yard
304.3	Crushed Gravel	Cubic Yard
304.32	Crushed Aggregate for Shoulder Leveling	Ton
304.33	Crushed Aggregate for Shoulder Leveling	Cubic Yard
304.35	Crushed Gravel for Unpaved Drives	Cubic Yard

304.4	Crushed Stone Base Course (Fine Gradation)	Cubic Yard
304.5	Crushed Stone Base Course (Coarse Gradation)	Cubic Yard
304.6	Crushed Stone (Very Coarse)	Cubic Yard

Table 304- 1 Base Course Materials

REQUIRED GRADATION

Item No.	304.1	304.2	304.3	304.32	304.33	304.4	304.5	304.6
Item	Sand	Gravel	Crushed Gravel	Crushed Gravel for Shoulder Leveling	Crushed Aggregate For Shoulders	Crushed Stone (Fine)	Crushed Stone (Coarse)	Crushed Stone (Very Coarse)
Sieve Size					**Percent Passing By Weight**			
6 in	100	100	---	---	---	---	---	100
5 in	---	---	---	---	---	---	---	
4 in	---	---	---	---	---	---	---	
3-1/2 in	---	---	---	---	---	---	100	60-90
3 in	---	---	100	---	---	---	85 - 100	
2 in	---	---	95 - 100	---	---	100	---	
1-1/2 in	---	---	---	100	100	85 - 100	60 - 90	45-75
1 in	---	---	55 - 85	90 - 100	90 - 100	---	---	
3/4 in	---	---		---	---	45 - 75	40 - 70	35-65
1/2 in	---	---	---	65 - 90	---	---	---	---
No. 4	70 - 100	25 - 70	27 - 52	30 - 55	30 - 65	10 - 45	15 - 40	15-40
No. 200 (In Sand Portion)*	0 - 12	0 - 12	0 - 12	---	---	---	---	
No. 200 (In Total Sample)	---	---	---	0 - 10	0 - 10	0 - 5	0 - 5	0-5

* Fraction passing the No. 4 sieve

SECTION 306 -- RECLAIMED STABILIZED BASE

Description

1.1 This work shall consist of scarifying if necessary, and pulverizing the existing pavement together with a base course material. It may require removal and rehandling, and the addition of other materials shown on the plans or as ordered.

Materials

2.1 General.

2.1.1 The material shall consist of the existing pavement blended with the underlying gravel or additional crushed gravel. Reclaimed stabilized base shall have a minimum bitumen content of 3 percent and conform to the following gradation:

Table 306-1 Required Gradation

Sieve Size	Percent Passing By Weight
3 in	100
1-1/2 in	80 - 100
3/4 in	55 - 90
No. 4	40 - 70

2.1.2 Additional stone as required to meet the above gradation shall meet the requirements of 304.2.1.1 with a maximum size of (1 ½ in)

2.1.3 Additional asphalt shall meet the requirements of Section 702 , as specified.

Construction Requirements

3.1 The existing pavement shall be pulverized together with the underlying base course and/or additional stone material if required. The pulverizing operation shall blend the existing pavement and base course into a homogeneous mass, utilizing the bitumen contained in the pavement as a stabilizer. The quantity of material mixed with the existing pavement shall be adjusted as necessary to meet the material specification of 2.1.1.

3.2 The reclaimed stabilized base shall be processed using approved reclaimers. Equipment such as a milling machine or a rock crushing plant will not be permitted. Reclaiming equipment shall be equipped with a gauge to show depth of material being processed.

3.3 Water shall be applied, as ordered, for the purpose of dust control and to ensure proper compaction. Water may be added during fine grading to improve workability. Additional water shall be applied prior to compaction and may require mixing to blend with reclaimed material to ensure adequate compaction.

3.4 Compaction requirements shall conform to 304.3.6. Density testing shall conform to 304.3.7.

3.5 Gradation shall be determined on the total sample prior to extraction by AASHTO T 27. Bitumen content shall be determined on that portion of the sample which passes a 3/4 in. sieve by AASHTO T 164. The Contractor shall make provisions for testing.

3.6 Prior to placing the processed material, the roadbed shall be shaped to the specified crown and grade. If the existing roadbed is disturbed, it shall be compacted in accordance with 304.3.6.

3.7 Excess material, unless specified otherwise, shall become the property of the Contractor.

3.8 Care shall be exercised to save all pavement for reclaiming if trenches are constructed prior to processing.

3.9 If the reclaimed stabilized base is not sufficient to complete the project, additional crushed gravel shall be used to make up the deficiency.

3.10 Reclaimed stabilized base specified to be removed and rehandled may be processed in the roadway or off site. The reclaimed stabilized base shall be returned to the highway and placed on the prepared roadbed to the depths specified.

3.11 Additional asphalt may be required to obtain the minimum 1.5 percent bitumen content.

3.11.1 The asphalt shall be applied by a liquid distributor or other approved methods, at a rate specified by the Engineer. The asphalt shall be blended with reclaimed stabilized base using approved mixing equipment.

3.11.2 Asphalt shall not be applied when rain is threatening, during rain storms, or when the air temperature is below 50 degrees Fahrenheit.

3.11.3 Prior to the addition of asphalt, the moisture content of the reclaimed stabilized base shall be adjusted by aerating or adding water if required.

3.12 If additional stone is used it shall be blended with the reclaimed material using an approved reclaimer.

Method of Measurement

4.1 Reclaimed stabilized base, of the depth specified, shall be measured by the square yard in place limited to the widths shown on the plans.

4.2 Additional stone will be measured by the ton in accordance with 108.01. The additional pass with the reclaimer to blend the material shall not be measured.

4.3 Asphalt will be measured by the ton or pound in accordance with 108.01.

Basis of Payment

5.1 The accepted quantity of reclaimed stabilized base will be paid for at the contract unit price per square yard, complete in place, at the depth specified.

5.1.1 Removal of excess material shall be subsidiary.

5.2 The accepted quantity of stone will be paid for at the Contract unit price per ton, complete in place. The additional pass with the reclaimer to blend the material shall be subsidiary.

5.3 The accepted quantities of asphalt will be paid for at the contract unit price per ton or pound, complete in place.

Pay Items and Units, Section 306 -- Reclaimed Stabilized Base:

306.1__	Reclaimed Stabilized Base Processed In Place, __ in Deep	S.Y.
306.2__	Reclaimed Stabilized Base Removed and Rehandled, __ in Deep	S.Y.
306.31	Asphalt for Reclaimed Stabilized Base	Pound
306.32	Asphalt for Reclaimed Stabilized Base	Ton
306.36	Stone for Reclaimed Stabilized Base	Ton

Examples:

306.108 Reclaimed Stabilized Base Processed In Place, 8 in Deep
306.212 Reclaimed Stabilized Base Removed and Rehandled, 12 in Deep

DIVISION 400 - PAVEMENTS

SECTION 401 -- PLANT MIX PAVEMENTS - GENERAL

Description

1.1 These specifications include general requirements that are applicable to all types of hot mix asphalt (HMA) pavements of the plant mix type irrespective of gradation of aggregate, type and quantity of liquid asphalt, or pavement use. Deviations from these general requirements will be indicated in the specific requirements for each item.

1.2 These specifications provide for the use of reclaimed asphalt pavement (RAP) material in certain specified mixtures.

1.3 This work shall consist of one or more courses of hot mix asphalt pavements constructed on the prepared foundation in accordance with these specifications and special provisions of the Contract, and in reasonably close conformity with the lines, grades, thicknesses, and typical cross sections shown on the plan, within the tolerances specified, or established by the Engineer.

Materials

2.1 Aggregates

2.1.1 Aggregates shall be of uniform quality durable pebbles or fragments of rock, with or without sand or other inert finely divided mineral aggregate. All material shall be free from clay balls, organic matter, and deleterious substances.

Washing will not be required, except when crushing operations do not produce clean material by the dry process method. In order to obtain uniformity in the appearance of the pavement throughout the project, the aggregate shall be obtained from the same material source for the duration of the project. Sufficient material shall be on hand prior to starting daily operations to ensure uninterrupted production for each working day.

2.1.2 Coarse aggregate shall be crushed stone or crushed gravel. Stockpiles consisting of a blend of crushed stone and crushed gravel will be permitted so long as the overall consistency of the stockpile is reasonably maintained and the crushed gravel does not exceed 10 percent of the total. This percentage shall be determined on the portion of the total sample that is retained on the No. 4 laboratory sieve, by weight.

2.1.2.1 Stockpiled coarse aggregate shall meet the requirements of Table 401- 1.

Table 401- 1 Aggregate, Percent Passing

Sieve Size	1-1/2 in. (37.5 mm)	3/4 in. (19.0 mm)	1/2 in. (12.5 mm)	3/8 in. (9.5 mm)
1-1/2 in.	100			
1-1/4 in.	90.0 - 100			
1 in.	50.0 - 85.0	100		
3/4 in.	10.0 - 50.0	90.0 - 100	100	
1/2 in.		15.0 - 55.0	90.0 - 100	100
3/8 in.			20.0 - 60.0	95.0 - 100
No. 4				22.0 - 55.0
No. 8	0 - 5.0	0 - 5.0	0 - 10.0	0 - 10.0

2.1.2.2 The coarse aggregate shall not contain more than one (1) percent of material such as crusher dust, sand or soft, disintegrated pieces.

2.1.2.3 Coarse aggregate for HMA shall be crushed stone and shall have a percentage of wear as determined by AASHTO T 96 of not more than 45 percent wear.

2.1.2.4 In each stockpile, not less than 75 percent by weight of the particles retained on the No. 4 sieve shall have at least one fractured face when tested in accordance with ASTM D5821.

2.1.2.5 The coarse aggregate shall not contain more than 10 percent, by weight, of flat or elongated pieces, when tested in accordance with ASTM D4791 at a ratio of 3:1.

2.1.2.6 The sodium sulfate soundness loss shall not exceed 9 percent, nor shall the magnesium soundness loss exceed 12 percent, after five cycles, when tested in accordance with AASHTO T104.

2.1.2.7 The use of steel slag or blast furnace slag shall not be permitted as a coarse aggregate.

2.1.3 Fine aggregate shall consist of sound durable particles of sand, crushed stone or a combination thereof. Fine aggregate shall be free from clay balls and deleterious material and organic matter. Stone screening shall be produced from stone at least equal in quality to that specified for coarse aggregate.

2.1.3.1 Natural sand may be used to obtain the gradation of the aggregate blend or to improve the workability of the mix. The amount of sand to be added will be adjusted to produce mixtures conforming to requirements of this specification. Fine aggregate may be 100 percent manufactured aggregate for base courses and must consist of at least 25 percent natural sand for wearing courses to provide increased workability.

2.1.3.2 Fine aggregates shall have sand equivalent values of 40 or greater when tested in accordance with AASHTO T176. The sand equivalent value shall be determined

for the combined mix aggregates, including coarse and fine aggregates and mineral filler portions.

2.1.3.3 The combined materials that passed the No. 100 sieve shall not have sufficient plasticity to permit the performing of the plastic limit test using AASHTO T90.

2.1.4 Mineral filler shall conform to AASHTO M 17 Section 2.

2.1.4.1 HMA mixtures shall contain a dust to effective asphalt ratio by mass between 0.6 and 1.2. For Superpave designed mixtures, mixtures that pass beneath the Primary Control Sieve (PCS) control point established by AASHTO M 323 may contain a dust to effective asphalt ratio by mass between 0.8 and 1.6.

2.2 Recycled Materials

2.2.1 Reclaimed Asphalt Pavement (RAP) Products. RAP may be used individually or in combination in the production of hot mix asphalt. The allowed dust to asphalt ratio shall be as identified in AASHTO M 323. The maximum allowable total reused asphalt binder (TRB) in HMA mixes shall be 1.0%. The allowed RAP percentage shall be reduced proportionally, based on asphalt cement content. Any changes in the combination of recycled materials shall require a new mix design and control strip unless otherwise approved by the Engineer.

2.2.2 RAP shall consist of recycled asphalt pavement and shall be processed by crushing, cold milling, or other approved sizing techniques to meet the required gradation specifications. The mixture of RAP and new aggregate shall meet the requirements specified in Table 401-1 for coarse aggregate gradation. The RAP shall be tested every 1,000 tons for gradation and asphalt binder content as a stockpile is being built. These test results shall remain on file by the contactor until such time as the entire RAP stockpile has been utilized. A running quality control gradation report shall be provided by the Contractor for the previous 1 month or 15 test results.

2.2.2.1 The aggregate component of the RAP shall meet the requirements of Section 401.2.1. The bituminous component of the RAP shall be asphalt cement and shall be free of significant contents of solvents, tars, and other volatile organic compounds or foreign substances that will make the RAP unacceptable for recycling.

2.2.2.2 The Contractor's Quality Control system shall assure that the RAP is free from detrimental amounts of contaminating substances such as joint seal compound and is reasonably uniformly graded from fine to coarse.

2.2.2.3 The RAP shall be crushed so that 100 percent passes the maximum aggregate size of the HMA mix in which it will be used.

2.2.2.4 RAP may be rejected if deemed unsuitable for any reason or require an increase or decrease in the mix asphalt content. The Contractor shall submit representative samples, and gradation and asphalt cement content test results of the

RAP to be incorporated into the recycled mixture for approval upon request of the Engineer.

2.3 Aggregate Sampling

2.3.1 All aggregate samples required for testing shall be furnished by the Contractor when requested. AASHTO T 2 shall be used in sampling coarse aggregate and fine aggregate, and AASHTO T 127 shall be used in sampling mineral filler. All tests for initial aggregate submittals necessary to determine compliance with requirements specified herein will be conducted by the Contractor under their Quality Control System. No aggregate shall be used in the production of mixtures without prior approval of the Engineer.

2.4 Bituminous Materials

2.4.1 The asphalt binder shall be a Performance Graded Asphalt Binder (PGAB) which meets the specification requirements of AASHTO M320 and AASHTO R29. The grade to be used shall be as ordered. Asphalt cement shall not be air blown or contain any form of used, recycled or re-refined oil

2.4.2 A separate job mix formula (JMF) with Tensile Strength Ratio (TSR) results shall be submitted for each PGAB grade proposed for use on this project.

2.4.3 The blending at the HMA plants of asphalt binder from different suppliers is prohibited. Contractors may switch to another approved source of PGAB, upon written notification to the Engineer and by certifying that the tank to be utilized has been drained to a un-pump able condition. The tank shall not retain more than 0.5% in volume capacity of previous residue source.

2.4.4 Documentation of the type of asphalt binder used per production day is to be stated on the weigh slips.

2.4.5 Producers and suppliers of asphalt binders shall comply with the requirements of AASHTO R 26. Asphalt binder suppliers shall have a quality control plan that complies with AASHTO R 26.

2.4.5.1 All suppliers of PG binder shall certify that the PG binder supplied for use on projects does not contain used, recycled or re-refined oil.

2.4.6 The Contractor shall furnish manufacturers' certified test reports for each tanker load or equivalent of binder shipped to the project as well as applicable materials certificates for the shipment of each tanker load or equivalent to the production plant. The reports shall be delivered to the Engineer before production. The furnishing of the vendor's certified test reports and material certificates for the PGAB material can be used as the basis for final acceptance of the bituminous material, or tested by the Engineer. If the Engineer elects to test the binder material at their costs, then the Contractor shall set aside one (1) 1-qt sample of the asphalt binder material obtained from each tanker load or equivalent of asphalt binder

material shipped to the production facility. Each sample shall be labeled with the PGAB grade, source and batch number, quantity, project name, plant, date, and the sampling inspector.

After receiving the quart samples, obtained by the Contractor, the Engineer may test the samples for verification of the performance grade. Material shall conform to the specification requirements for the applicable performance grade as specified herein. Material not conforming to specification requirements shall be subject to corrective action, production suspension, rejection, removal, or reduced payment as determined by the Engineer.

2.5 Asphalt Modifiers

2.5.1 The generic type of each asphalt binder admixture and/or additive shall be identified on the certificate of analysis which will be furnished by the manufacturer for each load of asphalt delivered.

2.5.2 When high-strength pavement is specified, modifiers will be added to the asphalt binder, the hot mix asphalt, or both. Asphalt binder modification shall utilize either a styrene-butadiene (SB) or styrene-butadiene-styrene (SBS) polymer to achieve the specified performance grade of asphalt meeting the requirements of AASHTO M 320, Table 1. The modified binder shall be pre-blended, storage-stable, and homogeneous.

Hot mix asphalt modification will be accomplished by adding a modifier to the mix during the batching process. All hot mix asphalt modifiers shall be shown on the New Hampshire Department of Transportation Qualified Products List. The percentage of mix modifier will be a percentage by weight of the asphalt binder or of the total batch as designated on the Hampshire Department of Transportation Qualified Products List.

2.5.3 A latex modifier may be used in conjunction with the asphalt binder for Ultra-thin surface courses or high roads with high traffic volume, trucks, and signalized intersections at the direction of the Engineer. The compound shall be a cold polymerized un-vulcanized virgin synthetic rubber in latex form and conform to the requirements in Table 401- 2.

Table 401- 2 Latex Compound Properties

Type of Latex	Anionic
Total Rubber Solids, % by weight	60 – 72
Ash, % of total rubber solids by weight	3.5 max
PH	9 – 11
Viscosity, Brookfield #2 @ 20 rpm, 77F	2,000 max.
Styrene Butadiene Ratio	24:76 + 2
Residual Styrene, % by weight	0.1 max.

The manufacturer of the latex compound shall furnish a material certification showing actual test results conforming to the specifications herein. The Contractor shall submit typical

samples of the latex compound and the unmodified bitumen to be used for the project to the Engineer for approval prior to production.

2.5.4 Asphalt binder anti-stripping additive shall be as designated on the New Hampshire Department of Transportation Qualified Products List.

2.5.5 The use of Warm Mix Technologies is permitted in mix production. Qualified technologies are listed on the New Hampshire Department of Transportation Qualified Warm Mix Asphalt (WMA) Technologies List.

2.6 Bonding Agents

2.6.1 Tack coat emulsified asphalt shall conform to AASHTO M140/ASTM D 997 or AASHTO M 208/ASTM D 2397, being an RS-1 or CRS-1 type.

2.6.2 Pavement Joint Adhesive shall be a product that is listed on the Hampshire Department of Transportation Qualified Products List.

2.7 Approval of Materials

At least five working days in advance of the date of starting operations or immediately upon the change of materials, the Engineer may request representative samples of all materials proposed for use. No material shall be used until it has been approved by the Engineer.

2.7.1 Approval of coarse aggregate shall be determined based upon:

a. Percent of Wear;
b. Sodium Sulfate Soundness;
c. Flat and Elongated Particles;
d. Coarse Aggregate Angularity;

2.7.2 Approval of fine aggregate shall be determined based upon:

a. Liquid Limit;
b. Plastic Index;
c. Sand Equivalent;
d. Fine Aggregate Angularity;
e. Dust to Effective Asphalt Ratio;

2.7.3 Acceptance of mineral filler shall be based upon conformance with AASHTO M 17 Section 2.

2.7.4 Acceptance of recycled materials shall be determined based on the material testing of stockpiled materials.

2.7.5 Acceptance of asphalt binder shall conform to AASHTO and/or ASTM test(s) for each material, the test results, and a signed statement that the material meets the specification requirement.

2.8 Method Requirements

2.8.1 The JMF for each course shall meet the Design Control Points provided in Table 401-5.

2.8.2 Once a JMF has been established, all mixtures furnished for the project shall conform within the following tolerances:

Maximum Aggregate Size	+0.0 and -7.0 percent
Passing No. 4 (4.75mm) and larger sieves	±7.0 percent
Passing No. 8 (2.36mm) to No. 100 (0.150 mm) sieve (inclusive)	±4.0 percent
Passing No. 200 (0.075mm) seive	±1.0 percent
Asphalt binder	±0.4 percent
Discharge temperature of mixture	±20ºF

2.8.3 When non-compliant test results or other conditions make it necessary, it shall be the responsibility of the Contractor to make all adjustments required to ensure the mix is brought back into conformance with the JMF. When the process is deemed out of control by either the Contractor or the Engineer, the Contractor shall suspend production until the issue is fully resolved. A revised JMF and an additional control strip shall be developed, for any significant blend changes.

2.9 Composition of Mixtures

2.9.1 Hot asphalt mix shall be composed of a mixture of aggregate, filler if required, asphalt binder, and/or additives, combined to meet to meet the composition limits by weight and other characteristics as specified. The several aggregate fractions shall be sized, uniformly graded, and combined in such proportions that the resulting mixture meets the grading requirements of the job mix formula (JMF).

2.9.2 The Contractor shall have the option of utilizing asphalt pavement removed under the Contract, if any, or old asphalt pavement from an existing stockpile or supplying all new materials for the production of asphalt pavement or any combination of the foregoing. If the JMF uses recycled materials, the mix shall meet the requirements of RAP as specified in Section 401.2.2.

2.9.3 The use of recycled binder in mix designs, up to 1.0% Total Reused Binder (TRB) without any change in asphalt binder requirements will be allowed as long as the mix design meets all volumetric mix design criteria. When a design has been completed using the maximum allowable percentage of TRB, one point verifications may be performed using decreasing percentages of TRB. If the design is not validated using a decreased amount of TRB, a new design will be required.

2.9.4 Each mixture shall be evaluated for stripping by performing indirect tensile tests on compacted mixtures. If the Tensile Strength Ratio (TSR) of the composite mixture, as determined by AASHTO T 283 with freeze/thaw, is less than 80, the aggregates shall be rejected or the asphalt will be treated with an approved anti-stripping agent. The amount of anti-stripping agent added to the asphalt shall be sufficient to produce a TSR of not less than 80. If an anti-strip agent is required, it will be provided by the Contractor at no additional cost.

2.9.5 Each lift shall be considered for the maximum size aggregate used which shall not be more than one-third of the compacted thickness of the course being constructed. The maximum size is defined as one sieve size larger than the nominal maximum size. The nominal maximum size is defined as one sieve size larger than the first sieve to cumulatively retain more than 10 percent.

2.10Job Mix Formula

2.10.1 The Contractor shall be responsible for the development of all job mix formulas. The Contractor shall use the Superpave mix designs based on Asphalt Institute SP-2 and AASHTO M 323, R 35, R 30, T 312, and the requirements contained or modified herein. For the Superpave volumetric mix design, the mixture of asphalt and aggregate shall be oven aged at the mixture's specified compaction temperature in accordance with AASHTO R 30.

2.10.2 Work shall not begin nor shall any mixture be accepted until the Contractor has submitted a JMF, samples of the existing and new materials intended for use, and has established a separate, JMF for each mixture. A separate JMF shall be submitted for each mixture and each approved RAP stockpile as described in Section 401.2.2.

2.10.3 The JMF shall be submitted in writing by the Contractor to the Engineer a minimum of ten (10) days prior to the start of paving operations.

2.10.4 The Volumetric mix design shall follow the procedure detailed in AASHTO with the following exceptions: Amend Table 401- 3 Superpave Gyratory Compaction Effort to read as follows:

Table 401- 3 Superpave Gyratory Compaction Effort

Design ESALs (Million)	N initial	N design	N max
0 < 5	6	50	75
≥5	7	75	115

And the following:

Table 401- 4 Minimum Binder Content

50 Gyration	75 Gyration

	3/8”	6.0%
5.8%	1/2”	5.5%
5.5%	Winter Binder 3/4”	5.2%
4.9%	3/4”	4.6%
4.6%	1”	4.3%

This required minimum asphalt content is based on the use of aggregate with a specific gravity of 2.65 to 2.70. The minimum asphalt content requirement may be adjusted when aggregate with a higher specific gravity is used.

Amend Table 3 in AASHTO M 323, referenced in AASHTO R 35, to read as follows:

Table 401- 5 Design Control Points

Standard Sieves (Inches)	Nominal Maximum Aggregate Size									
	1 in		**3/4 in Winter Binder**		**3/4 in**		**1/2 in**		**3/8 in**	
	Max.	**Max**	**Max**	**Min.**	**Max**	**Min.**	**Max.**	**Min.**	**Max.**	**Min.**
	Percentage by Weight Passing Criteria (Control Points)									
2										
1-1/2		100.0								
1	100.0	90.0		100.0		100.0				
3/4	90.0		100.0	90.0	100.0	90.0		100.0		
1/2			90.0		90.0		100.0	90.0		100.0
3/8							90.0		100.0	90.0
No. 4									90.0	
No. 8	45.0	19.0	42.0	38.0	42.0	32.0	52.0	42.0	56.0	46.0
No. 200	7.0	1.0	8.0	2.0	8.0	2.0	10.0	2.0	10.0	2.0

2.10.5 The JMF shall include at a minimum:

2.10.5.1 Aggregate:

a. Percent passing each sieve size – dry and washed as applicable;
b. Plot of the combined gradation on the Federal Highway Administration (FHWA) 0.45 power gradation curve;
c. Percent natural sand;
d. Percent fractured faces;
e. Percent flat or elongated particles;
f. Sand equivalent value ;
g. Fine aggregate angularity value;
h. Percentage of wear;
i. Sulfate soundness loss;
j. Individual and combined aggregate specific gravity;

2.10.5.2 Asphalt Binder :

a. Percent of asphalt binder;
b. PGAB test results and material certificate for each grade;
c. Mixing temperature;
d. Compaction temperature;

2.10.5.3 Additives & Modifiers:
a. Anti-strip agent – type and quantity;
b. Chemical Modifiers – type and quantity;

2.10.5.4 Design Properties:
a. Number of Design gyrations;
b. Temperature of mix when discharged from the mixer;
c. Dust to effective asphalt ratio;
d. Moisture Susceptibility by Tensile Strength Ratio (TSR) AASHTO T 283;
e. Graphical plot of air voids, voids in mineral aggregate (VMA), and voids filled with asphalt (VFA) versus asphalt content;
f. Bulk and apparent specific gravity – appropriate consensus properties;

2.10.6 The Superpave mixes shall also show density at $N_{initial}$, density at N_{design}, and density at N_{max} versus asphalt content; A JMF, once approved, will not be required for further mix approval for the construction season unless a change has occurred that warrants a new JMF approval or as directed by the Engineer. The approval of all JMF's will terminate on December 31st each year, regardless if the work is carried over to the following year.

Whenever the aggregate properties change enough to negate the project's existing design, a new JMF shall be submitted for approval by the Engineer.

Construction Requirements

3.1 Mixing Plants

3.1.1 General

3.1.1.1 Mixing plants shall conform to AASHTO M 156.

3.1.1.2 Mixing plants shall provide an AASHTO certified or NETTCP qualified Quality Control Laboratory approved for the required volumetric testing required to determine material conformance.

3.1.2 Access to Production Facilities

3.1.2.1 The Engineer shall have access at any time to all parts of the plant for inspection of the conditions and operations of the plant, for confirmation of the adequacy of the equipment in use, for verification of proportions and character of materials, and for determination of temperatures being maintained in the preparation of the mixtures.

3.1.3 Testing Laboratory Requirements

3.1.3.1 The Contractor or producer shall provide a testing laboratory at the production plant for quality control and quality acceptance functions during periods of mix production, sampling, and testing, and whenever materials are being produced. The laboratory shall contain adequate equipment, space, and utilities as required for the performance of the specified tests.

3.1.3.2 It shall be available for joint use by the Contractor for quality control testing, if applicable, and by the Engineer for acceptance testing. The laboratory must have adequate equipment for the performance of the tests required by these specifications and the requirements of NETTCP. The Engineer shall have priority in use of the equipment necessary for acceptance testing. All the necessary testing equipment shall be located at the HMA plant supplying material to the project. In addition, all ancillary and miscellaneous equipment needed to perform the testing in accordance with these specifications shall be provided by the Contractor at no additional cost.

3.1.3.3 The effective working area of the laboratory shall be a minimum of 150 square feet with a ceiling height of not less than 7.5 feet. Lighting shall be adequate to illuminate all working areas. It shall be equipped with heating and air conditioning units to maintain a temperature of 70°F + 5°F.

3.1.3.4 The Quality Control Laboratory shall have the following equipment:

a. Superpave gyratory compactor conforming to the requirements of AASHTO R 30, R 35, M 323, T 312 and the Asphalt Institute Manual SP-2;
b. Bulk specific gravity determination equipment (AASHTO T 166), and theoretical maximum specific gravity equipment (AASHTO T 209);
c. A 20,000 gram digital scale with 0.1 gram sensitivity;
d. Extraction and Gradation equipment providing the means to determine the asphalt content by chemical and/or ignition method and a mechanical shaker and sieves to determine conformance with gradation requirements;
e. Three stem thermometers capable of determining the mixture temperature with a tolerance of 5 degrees;
f. Thermometers and miscellaneous sampling/testing equipment providing suitable means to perform and confirm the material characteristics;

3.1.3.5 Laboratory facilities shall be kept clean and all equipment shall be maintained in proper working condition. The Engineer shall be permitted unrestricted access to inspect the Contractor's laboratory facility and witness quality control activities, if applicable. The Engineer will advise the Contractor in writing of any noted deficiencies concerning the laboratory facility, equipment, supplies, or testing personnel and procedures. When the deficiencies are serious enough to be adversely affecting test results, the incorporation of the materials into the work shall be

suspended immediately and will not be permitted to resume until the deficiencies are satisfactorily corrected.

3.1.3.6 Samples of all material including compacted specimens and certified copies of all reports and printouts shall be made available to the Engineer or its agent as often as requested including: asphalt binder; virgin aggregates; modifiers, loose and compacted mixture specimens; and combined aggregate samples.

3.1.4 Quality Control of HMA

3.1.4.1 Contractor Quality Control shall include production and placement Inspection and Testing and shall apply to all tons used in the City of Manchester.

The Contractor shall be prepared to discuss and present, at the pre-paving conference, their understanding of quality control for this Contract.
Job mix formula quality control testing is to be performed by the Contractor at the start of plant production and in conjunction with the calibration of the plant for the JMF. It should be recognized that the aggregates produced by the plant might not satisfy the gradation requirements or produce a mix that exactly meets the JMF. In those instances, it will be necessary to re-evaluate and re-design the mix using plant-produced aggregates. Specimens should be prepared and the optimum asphalt binder content determined in the same manner as for the original design tests. A revised JMF will need to be submitted and a new control strip constructed prior to approval and full production.

3.1.4.2 Control Charts. Contractor may develop production control charts and post for visual reference in the testing laboratory. The control charts should identify the project number, the contract item number, the test number, each test parameter, the Action and Suspension Limits applicable to each test parameter, and the production test results. If the project data during production indicates a problem and the Contractor is not taking satisfactory corrective action, then the Engineer may suspend production or acceptance of the material.

3.1.5 Quality Acceptance of HMA

3.1.5.1 All acceptance sampling and testing necessary to determine conformance with the requirements specified in this section will be performed by the Engineer at no cost to the Contractor, unless otherwise stated herein. Testing organizations performing these tests shall meet the requirements of ASTM D 3666. All equipment in Contractor furnished laboratories shall be calibrated and verified by a testing organization prior to the start of operations. Such verification/certification shall be furnished to the Engineer prior to production or affixed to the equipment. Engineer's testing personnel shall be certified by the New England Transportation Technician Certification Program (NETTCP). This function does not relieve the Contractor from performing their daily quality control tasks as part of their normal operating business.

3.1.6 Method Requirements

3.1.6.1 The site shall have ample storage space for the required separate bins, stalls, or stockpiles, to allow delivery of uncontaminated sized aggregates to the feeder. To prevent spillage from one pile or bin to the next, aggregate assigned to different stockpiles shall be separated by bulkheads or other satisfactory means, and buckets on equipment used to fill bins or stalls shall not be wider than the clear opening of the bin.

3.1.6.2 Coarse aggregates shall be furnished in at least two nominal sizes for mix types containing top size aggregates of 1/2 inch and above.

3.1.6.3 Stockpiles of coarse aggregate produced for use in drum mix plants having top size aggregates greater than 3/4 inch, shall be constructed in layers not to exceed four feet.

3.1.6.4 All blending of aggregates shall be accomplished through separate bins at the cold elevator feeders and not in stockpiles.

3.1.6.5 The plant shall be provided with a dust collector or collectors, designed to waste or return uniformly to the hot elevator, all or part of the material collected, as directed. All plants shall have adequate covers and housing as may be necessary to insure the proper collection of dust and the general cleanliness of the plant operation. The Contractor shall comply with all State and Federal environmental regulations.

3.1.6.6 Recycled materials (RAP) shall be fed into the plant by equipment specifically designed for recycling and shall be approved by the Engineer. In addition, all requirements pertaining to aggregates shall apply to recycled materials. Scalping screens, grizzlies, or similar devices shall be installed on the recycled material feed bin(s) to remove any debris or other foreign materials in excess of the desired maximum aggregate size shown in Table 401- 1. If a drum mix type plant is used, the recycled materials shall be fed into the drum so that it will not come in direct contact

with the burner flame. Mixing of recycled materials with the new aggregate shall occur before the bituminous material introduction point. The final mix produced shall be visually free from any chunks.

RAP shall be stockpiled on a free draining base separately from other aggregates. RAP from each pavement source shall be stockpiled with RAP materials having similar characteristics. RAP taken from 'Type A' pavement courses shall be stockpiled separately. RAP shall be reclaimed from stockpiles without contamination by foreign materials.

3.1.6.7 Plants shall be approved prior to operations and shall be operated so as to assure an adequate supply of mixture to the project.

3.2 Storage of Asphalt Binder

3.2.1 Tanks for storage of asphalt binder shall be a minimum 10,000 gallon capacity and equipped for heating the material under effective and positive control at all times, to the temperature requirements set forth in the specifications for the paving mixture. Heating shall be accomplished by steam or oil coils, electricity, or other means such that no flame shall come in contact with the heating tank.

3.2.2 A complete system providing for continuous circulation of the asphalt binder between the storage tank and the proportioning units shall be employed. The discharge end of the circulating pipe shall be maintained below the surface of the asphalt binder in the storage tank to prevent discharging the hot asphalt binder into the open air.

3.2.3 The Contractor shall provide in the asphalt binder feed lines connecting the plant storage tanks to the asphalt binder weighting system or spray bar a sampling outlet consisting of a valve installed in such a manner that samples may be withdrawn from the line slowly at any time during plant operation. The sampling outlet shall be installed between the pump and the return discharge line in such a location that it is readily accessible and free from obstruction. A drainage receptacle shall be provided for flushing the outlet prior to sampling.

3.3 Control of Asphalt Binder

3.3.1 Satisfactory means either by weighing or metering shall be provided to obtain the proper amount of asphalt binder in the mix within the tolerance specified. Means shall be provided for checking the quantity or rate of flow of asphalt binder into the mixer as follows:

a) Metering devices for asphalt binder shall indicate accurately to within 1.0 percent the amount of asphalt binder delivered. The section of the asphalt binder flow line between the charging valve and the spray bar shall be provided with a three-way valve and outlet whereby the quantity delivered by the meter may be checked by actual weight. The valve controlling the flow of asphalt binder to the mixer shall close tightly to prevent asphalt binder from leaking into the pug mill during the mixing cycle. The meter shall be constructed so that it may be locked at any dial

setting to 0.1 gallon and will automatically reset to this reading after the addition of asphalt binder to each batch. The dial shall be in full view of the mixer operator. The size and spacing of the spray bar openings shall provide a uniform application of asphalt binder the full length of the mixer in a thin uniform sheet or in multiple sprays.

b) If a bucket is used for weighing the asphalt binder, the bucket shall be of sufficient capacity to hold and weigh the amount required for a batch in a single weighing. The filling system and bucket shall be of such design, size, and shape that asphalt binder will not overflow, splash, or spill outside the confines of the bucket during filling and weighing, and it shall be so arranged as to deliver the asphalt binder in a thin uniform sheet or in multiple sprays over the full length of the mixer. The time required to add the asphalt binder shall be not more than 15 seconds.

c) Asphalt binder scales shall conform to the requirements for aggregate scales as specified in Section 401.3.4.7. Beam type scales shall be equipped with a tare beam or adequate counter-balance for balancing the bucket and compensating periodically for the accumulation of asphalt binder on the bucket.

3.3.2 Suitable means shall be provided, either by steam or oil jacketing or insulation, for maintaining the specified temperatures of the asphalt binder in the pipelines, meters, weigh buckets, spray bars, and other containers or flow line.

3.4 Batching Plants

3.4.1 All aggregates shall be delivered by belt feeders. All feeders shall provide an accurate and positive means for uniform and continuous feeding of the mineral aggregate into the dryer. The feeder or feeders shall be capable of delivering the maximum number of aggregate sizes required in their proper proportion. They shall provide for adjustment of the cold feed and shall be capable of being secured in any position. Feeders that surge or otherwise run intermittently will not be allowed. Cold Feeder for recycled materials sall be equipped with oversize particle scalper.

3.4.2 Dryers shall continuously agitate the aggregate during the heating and drying process without leaving any visible unburned oily residue on the aggregate when it is discharged from the dryer. If unusually wet aggregate is being used, the input to the dryer shall be reduced to that amount which the dryer is capable of drying. Aggregates shall be free from coatings of dust after drying.

3.4.3 Plant screens shall be constructed and operated in such a manner that all aggregates will be uniformly separated into the sizes required for proportioning. They shall have sufficient capacity to furnish the necessary quantity of each aggregate size required for continuous operation. Screen cloth that has broken or has worn sufficiently to affect the gradation shall be replaced.

3.4.4 Thermometric equipment shall be provided as follows:

a) An armored thermometer of suitable range shall be fixed in the asphalt binder feed line at a suitable location near the discharge at the mixer unit;
b) The plant shall be further equipped with an approved thermometer, pyrometer, or other approved thermometric instrument which shall continuously indicate the temperature of the heated aggregate at the discharge chute of the dryer;

3.4.5 Hot bins shall consist of at least four separate aggregate compartments. One compartment shall be reserved for fine aggregate, and when required, one additional compartment shall be added for dry storage of mineral filler. Alternate bin systems may be utilized with prior approval from the Engineer. Provision shall be made for accurate proportioning. When a compartment contains more than 15 percent undersized material, the compartment shall be drawn, and the cause of the contamination shall be corrected. Each compartment shall contain the following features:

a) Sufficient volume to supply the mixer at full rated capacity;
b) An overflow pipe that shall be of such size and at such a location as to prevent any backing up of material into other bins or into contact with the screen. Overflow apparatus shall be equipped with a telltale device that alerts the operator and the inspector when the overflow equipment is full;
c) Adequate telltale devices to indicate the position of the aggregate in the bins at the lower quarter points;
d) Gates which cut off quickly and completely, with no leakage;
e) Adequate and convenient facilities including safe platforms for obtaining representative samples for each bin;

3.4.6 Weigh boxes shall be of sufficient size to hold the maximum required weight of aggregate for one batch without hand raking or running over. The weight box shall be supported on fulcrums and knife edges so constructed that they will remain in alignment or adjustment. All parts of the weigh box shall be free from contact with any supporting rods, columns, or other equipment which will affect the proper functioning of the hopper or scale. Gates on both bins and weight hopper shall be constructed to prevent leakage when closed.

3.4.7 Aggregate scales for any weigh box or hopper shall be of standard make and design, accurate to 0.5 percent of the indicated load. The weight shall be indicated on a digital display. Scales shall be substantially constructed and shall be installed in such a manner as to be free from vibration. The dial shall be of the compounding type and have a full set of pointers to indicate the job mix formula. The digital display shall be in full view of the operator and the numerals shall be of such a size that they can be easily read by the inspector. If the digital display is so located that it is not easily accessible to the inspector, a duplicate display will be required for exclusive viewing by the inspector. The job mix formula target weights shall be part of the digital display continuously during plant operations. The digital scale weight indications shall be displayed adjacent (in juxtaposition) to each target weight for easy comparison to the job mix formula. It shall be the responsibility of the Contractor to arrange that all scales are tested and sealed according to provisions as shown in the National Institute of Standards and Technology Handbook 44, at least on an annual basis. The work shall be accomplished by a competent commercial scale company prior to the start of the

construction season. Scales shall be re-tested prior to use, after they have been moved. The Contractor shall have readily available at least ten standard 50-pound weights, for checking the scales during operations.

3.4.7.1 Recycled materials weighed separately from the materials in the virgin weigh hopper shall be weighed on a dedicated scale with a digital display at the accuracy described in 3.4.7

3.4.8 The batch mixer shall be of an approved pug mill type, hot oil or steam jacketed, or heated by other approved means and capable of producing uniform mixtures within the specified tolerances. The mixer shall have a batch capacity of not less than 4,000 lb. and be constructed so as to prevent leakage during the mixing cycle. The amount of material which may be mixed per batch shall not exceed the manufacturer's rated capacity. If the mixer will not mix properly at the rated capacity, or if its production does not coordinate with the other plant units, the Engineer reserves the right to reduce the size of the batch until the desired efficiency is obtained. The pug mill shall be equipped with a sufficient number of paddles operated at such speed as to produce a properly and uniformly mixed batch. If, in the course of mixing, two adjacent paddle tips become broken, immediate repair will be called for. If the paddle tips become broken at widely separated points, repair may be delayed until the end of the working day. The clearance of the tips from all fixed and moving parts shall not exceed 3/4 inch. Badly worn or defective tips shall not be used in mixing operations. The mixer shall be covered to prevent loss of fine material. The discharge gate shall be so designed that no uncoated material will be retained at the gate opening during the mixing operation. Leakage from the pug mill gate during operation will not be permitted.

3.4.9 Each plant shall be equipped with an accurate time lock to control the operations of a complete mixing cycle. A mixing cycle shall consist of two periods, the dry mixing period and the wet mixing period. The dry mixing period shall be the interval of time between the opening of the aggregate weigh hopper gate and the start of the application of asphalt binder. The wet mixing period shall be the interval of time between the start of the application of asphalt binder and the opening of the mixer gate. The time lock shall be capable of being set at the intervals of five seconds or less throughout the mixing cycle and shall have a suitable case equipped with an approved lock. The setting of time intervals shall be performed in the presence and under the direction of the Engineer who may lock the case until such time as a change is to be made in timing periods. The time lock shall lock the asphalt binder bucket throughout the dry mixing period and shall lock the mixer gate throughout the dry and wet mixing period. Lights meeting the approval of the Engineer and visible from the ground, shall indicate when each portion of the mixing cycle is occurring.

3.4.10 The use of a fully automatic batching plant may be approved, provided the systems for automatic batching and proportioning of the various components of the bituminous mixtures meet the following requirements:

a) The automatic proportioning controls shall include equipment for accurately proportioning batches of the various components of the mixture by weight in the specified sequence and for controlling and timing the mixing operation. Interlocks

shall be provided which will delay, stop, or lock out the automatic batch cycling whenever the batched quantity of any component weight or the total batch is not within the specified weight tolerance, or when there is a malfunction in any portion of the control system. The automatic batching or proportioning controls shall be equipped with lights meeting the approval of the Engineer and visible from the ground and shall indicate when each portion of the mixing cycle is occurring.

b) The automatic control for each batching scale system shall be equipped with a device for stopping the automatic cycle in the underweight check position and in the overweight check position for each material so that the tolerance setting may be checked.

c) The weight batching controls shall meet the following tolerances for the various components weighed in each batch as shown in Table 401- 6:

Table 401- 6 Weight Batching Controls Tolerance

Component Weighed	Percentage of Total Batch Weight
Tare weight of aggregate weigh box	± 0.5
Tare weight of asphalt binder weigh bucket	± 0.1
Each aggregate component	± 1.5
Mineral filler	± 0.5
Asphalt	± 0.1

d) The total weight of the batch shall not vary by more than +/- 2.0 percent of the designated batch weight.

e) Recording equipment shall be provided in all plants employing automatic proportioning. Each recorder shall include an automatic printer system. The printer shall produce, in digital form, a weight slip conforming to the requirement of Section 108.01 and Section 401.3.8.0

f) If, at any time, the automatic proportioning or recording system becomes inoperative, the plant will not be allowed to operate.

3.4.11 Each size of hot aggregate, the mineral filler if required, and the asphalt cement shall be measured separately and accurately to the proportions in which they are to be mixed.

3.4.12 Virgin aggregate shall be dried and heated to a minimum temperature of 260 degrees F. The asphalt binder shall be heated to a temperature between 260 degrees F and 325 degrees F. The weigh hopper shall be charging with the hot aggregate, coarse sizes first, unless otherwise directed

3.4.13 Virgin aggregate shall be dry mixed for 5 to 15 seconds.

3.4.13.1 Recycled materials can only be introduced to the weigh hopper or to the mixer. Recycled materials that are introduced in the weigh hopper shall be dry mixed per 3.4.13.

3.4.14 When recycled materials are delivered to the mixer separately from the virgin aggregates, wet mixing time shall not begin until all recycled material is introduced to the mixer and is moisture free. The duration shall be determined based on field/plant conditions, and by agreement of the Contractor and Engineer.

3.4.15 The asphalt binder shall be added and the mixing shall continue until a uniform coating is obtained and all particles of the aggregate thoroughly coated. The total dry and wet cycle shall be not less than 35 seconds for base and binder mixtures and not less than 40 seconds for the wearing course. In no case shall the total mixing period exceed 75 seconds.

3.4.16 If the aggregate in the hot bins contains sufficient moisture to cause foaming in the mixture, such aggregate shall be removed from the bins and production rate shall be reduced so as not to exceed the capacity of the dryer. Materials having once gone through the mixing plant shall not be returned to the stockpiles.

3.5 Drum Mix Plants

3.5.1 The plant shall be specifically designed for the process and shall be capable of satisfactorily heating, drying, and uniformly mixing the bituminous material and aggregate in accordance with the job mix formula. The rate of flow through the drum shall be controlled in order that a homogeneous mixture is obtained with all particles uniformly coated. In no case shall the quantity of mix produced exceed the manufacturer's rated capacity. If the percent of moisture in the mixture exceeds 1.0 percent by weight, the right is reserved to decrease the rate of production. The plant shall be equipped with automatic burner controls.

3.5.2 The cold bins shall be divided in at least five compartments and shall be designed to prevent the overflow of material from one bin to another. Each cold bin shall be equipped with an orifice to feed the aggregate accurately and uniformly. The feeding orifice shall be adjustable and indicators shall be provided to show the gate opening. An automatic plant shutoff device shall be provided to operate when any aggregate bin becomes empty or the flow from any bin gate becomes restricted. A vibrator or other suitable means may be required in order to insure a uniform flow of materials. The order of aggregate feed onto the composite cold feed belt shall be from coarse to fine. Aggregate shall pass through a scalping screen prior to the weigh belt.

3.5.2.1 When recycled material is used, an additional bin, equipped with its own oversize particle scalper, shall be required. In event of an emergency this bin may be used to feed aggregate in an amount not to exceed 15% of material to complete the day’s production.

3.5.3 The total cold aggregate feed shall be weighed continuously by an approved belt scale. The weighing system shall register within +/- 0.5 percent of the indicated load.

3.5.4 Proportioning controls for aggregate and asphalt binder shall be located at the panel which also controls the mixture and the temperature. The panel shall be equipped with automatic controls that shall display, in digital form, the percentages of asphalt binder, mineral filler if required, and each aggregate in the job mix formula. The panel shall also be equipped to raise and lower the production rate without having to reset the individual controls for each change in production rate. The controls shall maintain aggregate flow accuracy such that the total variation of all materials being drawn per interval of time shall not exceed an amount equal to 1.5 percent of the total weight of bituminous mixture per interval of time.

3.5.5 Provisions shall be made for introducing the moisture content of the total cold feed into the belt weighing system and correcting the wet aggregate weight to dry aggregate weight. The system shall be capable of adjusting the flow of bituminous material to compensate for any variation in the dry weight of the aggregate flow. It shall be the responsibility of the Contractor to monitor and determine accurate moisture contents of the aggregate and RAP stockpiles used for production of hot mix asphalt. Accurate moisture contents shall be determined at a minimum of every other day of production. In the event of rain, moisture contents shall be determined for all aggregates and RAP to be utilized before the next day's production.

3.5.6 The dry weight of aggregate flow shall be displayed by automatic digital readout in intervals of weight per interval of time.

3.5.7 When mineral filler is specified, a separate bin and feeder shall be provided with variable drive interlocked with the aggregate feeders. Mineral filler shall be introduced and uniformly dispersed into the mixture without loss to the dust collection system. A device shall be provided to indicate when the flow of filler into the delivery system stops or its specified volume is out of the job mix tolerance. The rate of flow shall be accurate to within 0.5 percent by weight of the total mix. Means shall be provided to readily divert the flow of mineral filler into a container for measurement.

3.5.8 The asphalt binder shall be introduced through a continuously registering cumulative indicating meter by a pump specifically designed for the plant. The meter shall be located in the asphalt line so that it will continuously register the asphalt discharge to the mixer and so that the discharge through the meter can be readily diverted into a suitable container for measurement by actual weight. The meter shall indicate accurately to within 1.0 percent the amount of asphalt binder being delivered. The accuracy of the pump and meter shall be verified at periodic intervals as designated by the Engineer.

3.5.9 Satisfactory means shall be provided to assure positive interlock between dry weight of aggregate flow and the flow of bituminous material through an approved meter.

3.5.10 The flow of bituminous material shall be displayed by automatic digital readouts in terms of volume or intervals of weight and time.

3.5.11 The plant shall have means of diverting mixes at start up and shut down or where mixing is not complete or uniform.

3.5.12 A surge or storage system complying with Section 401.4.1 shall be provided.

3.5.13 An automatic aggregate sampling device shall be provided which will divert representative samples of the full flow of aggregate from the total cold feed. The sampling device shall cut the full width and depth of the aggregate flow. The sampling point shall be after the aggregate has passed through the scalping screen and prior to entry into the drum.

3.6 Mixing Temperature

3.6.1 Method Requirements

3.6.1.1 The Engineer may adjust the JMF temperature within the limits of 260° F and 350° F according to the existing conditions. Material with a temperature at discharge outside the job mix formula tolerance may be rejected. In no case will a mixture be accepted with a discharge temperature in excess of 375° F unless indicated by manufacturer recommendations.

During hot weather, the temperature of the mixture when discharged shall be as low as is consistent with proper mixing and placing. During cold weather, a temperature approaching the upper limit is desirable.

3.7 Hot Storage System

3.7.1 Material may be placed in a heated and insulated storage silo for a period not to exceed 24 hours from the time of mixing. The upper and lower gates when closed shall create an airtight seal. The silo shall be filled to capacity. Storage of 24hours will not be allowed if there is reason to believe there is a problem with the gate seals or excessive heat loss.

3.7.2 When the insulated storage silo is not being heated, the material shall be discharged from the silo within 4 hours of production.

3.7.3 The hot storage system shall be capable of conveying the hot mix asphalt from the plant to insulated storage bins and storing the hot mix without appreciable loss in temperature, asphalt migration, segregation or oxidation.

3.7.4 The conveyor system may be a continuous type or skip bucket type. If the continuous type is used, it shall be enclosed to prevent a drop in mix temperature. If the skip bucket type is used, the bucket must be of sufficient capacity to transport an entire batch and mass dump into the bins.

3.7.5 The storage bins shall be designed in such a manner as to prevent segregation of the hot mix during discharge from the conveyor into the bins and shall be equipped with discharge gates that will not cause segregation of the hot mix while loading the mix onto the

trucks. The storage bin heating system shall be capable of maintaining the mix temperature without localized heating (hot spots).

3.7.6 The bin shall be equipped with a light or indicator to show when the level of material reaches the top of the discharge cone. The bin shall not be emptied below the top of the discharge cone until the use of the bin is completed each day. The material remaining in the discharge cone may be rejected if there is evidence of segregation.

3.7.7 The storage time will be defined as the interval of time beginning with the introduction of the mixture into the bin to the time of the completion of discharge from the bin.

3.7.8 Approval for the use of storage bins may be withdrawn in the event there is an excessive amount of heat loss, segregation or oxidation of the hot mix due to the use of storage bins.

3.8 Weighing and Hauling

3.8.1 The Contractor shall provide an approved automatic printer system which will print the weights of the material delivered, provided the system is used in conjunction with an approved automatic batching and mixing control system. Such weights shall be evidenced by a weight ticket for each load.

3.8.2 Weight slips shall include requirements as shown in Section 108.01and the following. For batch plants with automatic proportioning equipment:

a) Tare weight of aggregate weigh box;
b) Tare weight of asphalt binder weigh bucket;
c) Accumulative weights as batched for each aggregate (total of last aggregate will be aggregate total);
d) Weight of asphalt binder;
e) Accumulated total weight of batch;

3.8.3 Each weight slip will show a consecutive slip number and shall include accumulative total of material delivered for each day. The slip will also provide the mix type and liquid grade being delivered.

3.9 Material Haul Vehicles

3.9.1 HMA deliveries shall be scheduled so that placing and compacting of mixture is uniform with minimum stopping and starting of the paver.

3.9.2 The inside surfaces of vehicles may be lightly lubricated with a soap solution or non-petroleum release agent that will not be detrimental to the mix. Excess application of lubricant will not be permitted. Equipment which leaks oil, diesel fuel, gasoline or any other substance detrimental to the pavement will not be allowed on the project.

3.9.3 The mixture shall be transported from the paving plant to the project in trucks having tight, smooth metal beds previously cleaned of all foreign materials. Truck beds may be lined with a polyethylene type material designed and installed for hauling hot bituminous mixes. Each load shall be covered with canvas or other suitable material of sufficient size and thickness to retain heat and to protect it from weather conditions. The cover when new shall weigh a minimum of 18 oz. /yd2 and it shall be a tightly woven or solid material. When necessary, so that the mixture will be delivered on the project at the specified temperature, truck beds shall be insulated and covers shall be securely fastened.

3.10 HMA Placement

3.10.1 Schedule and Meetings. Prior to placing of any mix, a pre-paving conference shall be held to discuss and approve the paving schedule, source of mix, type and amount of equipment to be used, sequence of paving pattern, rate of mix supply, traffic control, and general continuity of the operation. Special attention shall be made to the paving pattern sequence to minimize cold joints. The field supervisors of the above mentioned operations shall attend this meeting including any related subcontractors.

The Contractor shall notify the Engineer at least five working days in advance of paving operations to allow sufficient time to schedule required site inspection and testing. All paving and compaction equipment shall be approved and on site prior to start up each day

3.10.2 Limit of Work. At the beginning and end of the project or at intersecting driveways and side streets, the existing pavement shall be removed to a sufficient depth to allow the placement of the new pavement and construction of a smooth riding transverse joint. The underlying course shall be clean and free from foreign materials and loose bituminous patches and must present a dry, unyielding surface.

3.10.3 Pavement Patching. Paving shall not proceed until deficient base material areas and utility trenches have been corrected and are ready to receive paving. Paving shall not be applied until the Engineer inspects and approves the finished base.

3.10.4 Sealing of Cracks. Crack sealing material to be covered by a 1 in. or less overlay shall cure a minimum of 45 days prior to the placement of bituminous pavement. The placement shall be such that the material is flush fill or concave down. Sealing of cracks will be at the request of the Engineer.

3.10.5 Levelling Course. When an existing surface or new base upon which the new pavement is to be placed contains unsatisfactory irregularities, in the Engineer's judgment, such irregularities may be eliminated by an adequate placing and compaction of HMA mixture so as to furnish a surface with true contour and grade before placing any specified course of mixture.

Any HMA used for truing and leveling shall meet the requirements of NH DOT ¾" Leveling material. Leveling courses shall not be subject to density requirements. The thickness of the

leveling course shall be measured off the interface with the existing milled or un-milled pavement surface. The leveling course shall be compacted with the same effort used to achieve placement and density of the control strip. The truing and leveling course shall not exceed a nominal thickness of 1.5 inches in areas of rutting without placing and compacting in multiple lifts. The use of a pneumatic rubber tire roller is desired for compaction of the leveling course.

3.10.6 Structures. Drainage and utility structures within the limits of the pavement shall be set and raised in accordance with the provision of Sections 604.3.11 and 604.3.4. Contact surfaces of the drainage and utility castings as ordered shall be painted with a thin coating of suitable emulsified tack coat.

3.10.7 Sweeping. Immediately before placing the hot mix asphalt, the underlying course shall be thoroughly cleaned of all dust and debris by a self-propelled sweeper. Areas inaccessible by power sweepers shall be broom swept until the pavement surface is clean. Extra care shall be required during fall leaf season. Sweeping with a power broom, supplemented by hand sweeping, and additional labor may be necessary.

3.10.8 Tack Coat. Contact surfaces of manholes, structures, vertical pavement edges, etc. shall be painted with a thin, uniform tack coat just before the material is placed against them. Emulsified tack coat material shall conform to Section 410 .

Tack coat is required on all surfaces to be paved; this includes leveling, base or intermediate layers of HMA, unless the underlying HMA layer was placed during the same day. Particular attention should be made during the application that the longitudinal joint areas be treated with no bare spots. Missing areas adjacent to the longitudinal joint area will require either re-application or localized hand work application as directed by the Engineer.

Tack coat shall be applied at a residual binder amount on the pavement between 0.03 to 0.07 gallons per square yard. Use the lower application amount between new lifts and the higher application rate on milled or Portland cement surfaces. This amounts to a very thin application that needs to be carefully applied. These can be applied, as an emulsion, between 0.05 to 0.10 gallons per square yard.

Allow tack coat to dry from a brown color to a black color prior to paving.

3.10.9 Night Work. When performing paving operations at night, the Contractor shall provide sufficient lighting at the work site to ensure the same degree of accuracy in workmanship and conditions regarding safety as would be obtained in daylight. Work shall not be permitted to continue if the Engineer deems conditions to be adverse to placement operations or the site becomes unsafe.

3.10.10 Weather Limitations

3.10.10.1General. In special instances, when the Engineer determines that it is in the best interest of the City, the Engineer may waive the requirements of Section 401.3.10.10.

3.10.10.2 Any material delivered to the spreader having a temperature lower than 260° F shall not be accepted.

3.10.10.3 Mixtures shall be placed only when the underlying surface is dry, frost-free, and the surface temperature is above 40°F for courses greater than 1-1/2 in. in compacted depth and above 50° F for courses less than 1-1/2 in. in compacted depth.

3.10.10.4 The Engineer will not permit work to continue when overtaken by sudden storms. The material in transit at the time of shutdown will not be placed until the pavement surface shows no signs of free moisture, provided the mixture is within temperature limits as specified.

3.10.10.5 No load shall be sent out so late in the day that spreading and compaction cannot be completed during daylight, unless night work is specified. If rapid surface cooling of the laid down mix is occurring due to wind, the Engineer may suspend operations for the day.

3.10.10.6 Wearing courses shall not be scheduled for placement after October 1 or before May 1 of any year without written approval by the Engineer. If it is determined to be in the best interest of the City to schedule placement after October 1 or prior to May 1, the above specified weather and surface conditions shall remain in effect.

3.10.10.7 Any paving permited between October 1st and April 15th shall require anti-strip additive.

3.11Pavers

3.11.1 General

3.11.1.1 Pavers shall be:

a) Self-contained, power propelled units with adjustable vibratory screeds with full-width screw augers;
b) Heated for the full width of the screed;
c) Capable of spreading and finishing courses of hot asphalt mix in widths at least 12 inches more than the width of one lane;
d) Equipped with a receiving hopper having sufficient capacity to ensure a uniform spreading operation;
e) Equipped with automatic feed controls, which are properly adjusted to maintain a uniform depth of material ahead of the screed;
f) Capable of being operated at forward speeds consistent with satisfactory placement of the mix;

g) Capable of producing a finished surface of the required smoothness and texture without segregating, tearing, shoving, or gouging the mixture;
h) Equipped with automatic screed controls with sensors capable of sensing the transverse slope of the screed, and providing the automatic signals that operate the screed to maintain grade and transverse slope from a reference such as a grade wire or ski type device, either a floating beam with a minimum length of 30 ft. or sonic averaging with a minimum length of 24 ft.

3.11.1.2 When patching existing pavement, the material shall be placed on the prepared clean underlying surface at the locations designated and shall be spread to produce a smooth and uniform patch. The patch material shall be thoroughly compacted and shall match the line and grade of the adjacent pavement.

3.11.1.3 Relatively small areas not accessible to the paver may be spread by hand, but extreme care shall be taken to create a surface texture similar to the machine work. Surface material shall be spread by lutes and not by rakes.

3.11.1.4 Unless otherwise authorized, the final wearing course shall not be placed until guardrail posts, curbing, have been set and general cleanup has been completed.

3.11.1.5 When hot bituminous bridge pavement is to be placed over barrier membrane, the placing temperature shall be as specified in Section 538.3.3.5. Unless otherwise permitted, the 1 inch base course shall be placed within five days after the membrane has been completed. A paver, mounted on rubber tracks or tires, shall be used to place the 1 inch base course unless this procedure is found to cause damage to the membrane. When such damage is found to be evident, the hand method may be allowed. The hand method may also be allowed if the Engineer determines that the use of a paver for this work is impractical. During warm weather, the above paving shall be done during the cool period of the day.

3.11.1.6 Where pavement is placed adjacent to structural members such as expansion joints, the material in the top course shall be placed so that the compacted grade of the pavement is 1/4 to 3/8 in. (6 to 10 mm) above the grade of the structural member.

3.11.1.7 When paving on aggregate base courses and/or base course pavement, the first pass paved shall be on the travel way and on the shoulders.

3.11.1.8 Pavers used for machine method placement items in Section 403 shall have a minimum weight of 28,000 lb. and a minimum 8-foot wheelbase. Given their reduced size for the application, pavers used for paving of sidewalks, drives and drive aprons shall not need to meet these requirements.

3.11.2 Method Requirements

3.11.2.1 All courses shall be spread and finished to the required thickness by approved type, self-contained, self-propelled spreading and finishing machines (pavers). Pavers

shall be provided with the adjustable, activated screed assembly and shall be capable of spreading the mixtures with a finish that is smooth, true to the required cross-section, uniform in density and texture and free from hollows, tears, gouges, corrugations and other irregularities. Broadcasting behind the paver shall be held to a minimum. Pavers shall be capable of spreading and finishing courses of the required thicknesses and lane widths. Horizontally oscillating strike-off assemblies will not be approved.

3.11.2.2 The activated screed or strike-off assembly shall be of the vibrating or tamping bar type or combination of both and shall operate without tearing, shoving or gouging the mixture. The activated portion of the screed shall extend the full width of the mixture being placed in the traveled way and other areas with sufficient width to accommodate a paver. Outside of the traveled way such as on shoulders, tapers, areas adjacent to curbs and at other locations as permitted, non-activated extensions to the screed will be allowed. The paver shall be equipped with a screed heater which shall be used when starting a cold machine and for maintaining a suitable screed temperature when needed.

3.11.2.3 The paver hopper gates shall be adjusted to pass the correct amount of mix to the spreading screws so that the screws will operate more or less continuously. The height of material shall be maintained at a constant level in front of the screed, to a point where approximately half of the auger shall be visible at all times.

3.11.2.4 Acceptable automatic screed controls with sensors for either or both sides of the paver shall be:

a) Two 24 foot ski-type devices (floating beams);
b) Two grade sensors;
c) Two short skis (joint matchers);
d) Slope sensing control for transverse slope;

The sensors for either or both sides of the paver shall be capable of sensing grade from an outside reference line or from the surface using a ski-type device and shall be capable of sensing transverse slope of the screed and providing automatic signals which operate the screed to maintain the desired grade and transverse slope. Pavers shall not be used until the automatic controls have been checked and approved by the Engineer.

3.11.2.5 The use of automatic grade and slope controls shall be required on all pavers.

3.11.2.6 Whenever a breakdown or malfunction of the automatic controls occurs, the equipment may be operated manually or by other methods for the remainder of the normal working day, on which the breakdown or malfunction occurred, provided this method of operation will produce results otherwise meeting specifications.

3.11.2.7 On projects or parts of projects where the Engineer deems that the use of automatic controls is impracticable, he may permit manual operation.

3.11.2.8 An adequate number of haul units shall be provided to the paver to have a continuous asphalt supply. The forward speed of the paver shall be adjusted so that the paver is operated without having to stop. Should the paving operations need to stop more than 15 minutes , the Engineer may require the paving unit to square off placed mat and compact. Paving shall resume once the Engineer determines the proper supply has been reestablished. The mat shall be saw cut to create a clean transverse joint before operations begin again. When interuptions in the supply are chronic, the Engineer may elect to suspend all paving operations until the Contractor makes arrangements to synchronize the rate of paving with the rate of delivery of materials.

3.12 HMA Compaction

3.12.1 Method Requirements

3.12.1.1 Immediately after the hot asphalt mix has been spread, struck off, and surface irregularities adjusted, it shall be thoroughly and uniformly compacted by rolling. The initial rolling shall be done with a vibratory or oscillatory steel-drum roller. If required or specified by the Engineer, intermediate rolling shall be done by a pneumatic-tired roller. Final rolling shall be done with a static or oscillatory steel-drum roller. The completed course shall be free from ridges, ruts, humps, depressions, objectionable marks, visible segregation, or irregularities and in conformance with the line, grade, and cross-section shown in the Plans or as established by the Engineer. Rollers must be in good mechanical condition, free from excessive backlash, faulty steering mechanism, or worn parts. The empty weight and the ballasted weight shall be properly marked on each roller. The minimum weight of static steel-drum rollers shall be 10 tons. When a vibratory or oscillatory roller is being used, the vibration or oscillation shall stop automatically when the roller is stopped or reversing direction of travel.

3.12.1.2 If pneumatic-tire rollers are to be used they shall be self-propelled and shall be equipped with smooth tires of equal size and diameter. The wheels shall be so spaced that one pass of a two-axle roller accomplishes one complete coverage. The wheels shall not wobble and shall be equipped with pads that keep the tires wet. The rollers shall provide an operating weight of not less than 2,000 lb. per wheel. Tires shall be maintained at a uniform pressure between 55 and 90 psi with a 5 psi tolerance between all tires. A suitable tire pressure gauge shall be readily available.

3.12.1.3 Unless otherwise directed, rolling shall begin at the sides and proceed longitudinally parallel to the roadway center line, gradually progressing to the crown of the roadway. The overlap shall be one-half the roller width for wheeled rollers and 6 inch for vibrating rollers. No overlap is required for pneumatic-tired rollers. All turning of the roller shall be completed on a pavement which has had at least one roller pass. When paving in echelon or abutting a previously placed lane, the longitudinal joint shall be rolled first followed by the regular rolling procedure. On super elevated curves, the rolling shall begin at the low side and progress to the high side by overlapping of longitudinal passes parallel to the centerline.

3.12.1.4 Rollers shall move at a slow but uniform speed with the drive roll or drive wheels nearest the paver, except on steep grades. Static and pneumatic-tired rollers shall not operate at speeds in excess of 6 mph.

3.12.1.5 All courses shall be rolled until all roller marks are eliminated, and a minimum density of 92 percent of maximum theoretical density as determined in accordance with AASHTO T 209 has been obtained. When paving 1 inch overlays on pavement that has not been leveled, a minimum density of 91 percent will be required. Longitudinal construction joints shall be compacted to a minimum of 90 percent of the maximum theoretical density.

3.12.1.6 Any displacement occurring as a result of reversing the direction of a roller, or from other causes, shall be corrected at once by the use of lutes and the addition of fresh mixture when required. Care shall be exercised in rolling so as not to displace the line and grade of the edges of the bituminous mixture.

3.12.1.7 To prevent adhesion of the mixture to the rollers, the wheels shall be kept properly moistened with water or water mixed with very small quantities of detergent or other approved material. Excess liquid will not be permitted. All steel rollers shall be equipped with adjustable wheel scrapers.

3.12.1.8 Along forms, curbs, headers, and similar structures and other places not accessible to a normal full-sized roller, sidewalk rollers weighing at least 2,000 lb. shall be used. Where rollers are impracticable, the mixture shall be thoroughly compacted with heated or lightly oiled hand tamps or vibrating plate compactors.

3.12.1.9 Unless the Engineer determines that for the weight and placement conditions a lesser number will be satisfactory to obtain the desired pavement densities, the following is the list of required compaction equipment. The output of each paver placing wearing course materials shall be compacted by the use of one each of the following complement of rollers as a minimum: a static or vibratory steel-wheel roller, a pneumatic-tired roller or oscillatory roller and a static steel-wheeled finish roller. If the required density is not being obtained with the rollers supplied, the use of additional rollers of the specified type may be ordered. Paving widths in excess of 16 ft. (5 m) will require additional rollers as ordered.

3.12.2 Control Strip

3.12.2.1 When constructing hot mix asphalt courses, a control strip shall be constructed at the beginning of the work for the purpose of establishing the correct rolling pattern that will achieve the required density for each material type and course placed. Each control strip shall be constructed to acceptable density and surface tolerances and shall remain in place to become portion of the completed roadway. Unacceptable control strips shall be corrected or removed and replaced at the Contractor's expense. A control strip shall be at least 250 linear feet in length and span the width of the freshly placed mat, or up to 1 day’s production. A minimum of one longitudinal joint shall be formed

where width permits. The materials and the equipment used to construct the control strip shall be the same as that to be used during full production.

3.12.2.2 Compaction of the control strip shall commence immediately after the course has been placed to the specified thickness. Compaction of the control strip shall continue until no discernable increase in density can be obtained by additional compactive effort. If the mean mat density following compaction is found to be less than 96 percent of the laboratory density or less than 92 percent of a maximum theoretical density for the material being used, the Engineer may order the construction of another control strip. If the mean joint density following compaction is found to be less than 94 percent of the laboratory density or less than 90 percent of a maximum theoretical density for the material being used, the Engineer may order the construction of another control strip. The mean density shall be determined by averaging the results of 10 density tests or 5 pavement cores taken from the pavement mat and 3 pavement cores taken from the longitudinal joint at randomly selected sites within the control strip.

Two random sample(s) shall be taken at the plant by the City's inspector and tested for air voids. One random sample of mixture shall be taken at the plant and tested for aggregate gradation and asphalt binder content. The test will be compared to the approved Job Mix Formula and checked for conformance within acceptable tolerances.

The control strip shall be considered acceptable if the uniformity, thickness, longitudinal joint and mat density, plant air voids, asphalt content, gradation and temperatures are within the requirements of this specification.

A new control strip may be ordered by the Engineer or requested by the Contractor when a change in the material or job mix formula is made or if the Engineer has reason to believe that the material being placed is not representative of the control strip.

3.12.2.3 A control strip will not be required if the total tonnage on the project is less than 500 tons.

Full production will not be permitted until specification requirements, including density, thickness, and laboratory test results, are approved by the Engineer.

3.13 Pavement Joints

3.13.1 Unless otherwise shown on the plans, the longitudinal wearing course joints shall be at the edge of lane placed, where the edge line, lane line and centerline pavement markings will be applied, and joints of other courses shall be offset approximately 6 inches.

3.13.2 The material being placed next to a previously paved lane shall be tightly crowded against the face of the abutting lane. The paver shall be positioned so that during spreading, the material will overlap the edge of the first lane by 1 to 2 inches and shall be left sufficiently high such that finish pavement of the lane being placed is approximately 1/8 inches higher than the previously paved lane after compaction. The overlapped material shall

be rolled without luting. Longitudinal joint compaction shall be achieved by rolling from the hot side to within 6 inches of the previously placed mat. The next roller pass will overlap onto the previously placed paved lane by 6 inches. Further compactive effort shall be applied to all joints during the intermediate and final rolling.

3.13.3 Placing of the course shall be as continuous as possible while complying with the traffic control plan that is in place. Transverse joints will be allowed at the end of each work day/shift or as required to provide properly bonded longitudinal joints.

3.13.3.1 No longitudinal joints greater than 2 inches in height shall be left open to traffic unless a tapered overlapping ("wedge") joint is used. Centerline joints greater than 1 inch shall be properly delineated and signed appropriately. Joints between traveled way and shoulder greater than 1 inch shall be delineated by barrels, cones and/or signs.

3.13.3.2 Unless otherwise precluded by weather conditions, longitudinal joints shall not remain open to traffic longer than 48 hours.

3.13.4 If a bulkhead is not used to form the transverse joint, the previously laid material shall be cut back to the designed slope and grade of the course. The joint face shall be coated with approved bituminous bonding material meeting the requirements of Section 410 before the fresh mixture is placed against it. Extreme care shall be taken to ensure that no unevenness occurs at the joint. If unsatisfactory riding qualities are obtained at the transverse joint in the wearing course, the joint shall be corrected by an approved method.

3.13.4.1 Prior to opening any lane(s) to traffic, transverse joints shall be ramped by means of an asphalt fillet at a minimum of 5 feet horizontal to 1 inch vertical slope.

3.13.5 An approved bituminous bonding material (tack coat) meeting the requirements of Section 410.3.4.1 shall be applied to completely cover all joint contact surfaces.

3.13.6 A bituminous pavement joint adhesive (hot poured rubber) shall be applied to the longitudinal joint. If joint adhesive has not been specified, an approved bituminous bonding material meeting the requirements of Section 410.2.1 shall be applied to completely cover all joint contact surfaces.

3.13.6.1 Joint adhesive shall be applied to the longitudinal joints so that the entire joint surface is covered with a minimum 1/8 inch thick layer of material. If a wedge joint is used the upper 4 inches of joint surface shall be covered with joint adhesive.

3.13.6.2 The joint face on which the joint adhesive is to be applied shall be dry, free from loose material, dust, or other debris that could interfere with adhesion. A hot air lance shall be used to dry and clean the joint face immediately prior to application of joint adhesive. If dust or debris adheres to the joint adhesive, it shall be cleaned or recoated as directed by the Engineer.

3.13.6.3 Trucks or traffic shall not drive across the joint adhesive until it has cooled sufficiently to prevent damage from tracking.

3.13.6.4 Joint adhesive shall be melted in a jacketed double boiler melting unit, which is equipped with an effective agitation system as recommended by the joint adhesive manufacturer. The joint adhesive shall be applied at the temperature specified by the manufacturer and shall not be heated above the safe heating temperature specified by the manufacturer.

3.13.6.5 Joint adhesive shall be applied using a pressure feed wand applicator system equipped with an applicator shoe as recommended by the manufacturer. A pour-pot applicator will be allowed on wedge joints only.

3.13.7 A tapered overlapping ("wedge") joint may be used on all longitudinal joints provided that the adjacent lane can be placed when the existing surface temperature is above 50° F.

3.13.7.1 An inclined face (3:1) on the joint shall be formed in the first bituminous mat placed. The inclined face may be for the entire height or an inclined face with a 1/2 inch maximum vertical face at the top of the mat.

3.13.7.2 After the initial mat is placed, the mat shall be rolled to the edge of the unconfined face.

3.13.7.3 When the adjoining mat is placed the initial longitudinal wedge shall be treated as in Section 401.3.13.5

3.13.7.4 The joint matching and compaction shall be performed in accordance with Section 401.3.13.

3.13.8 The Contractor shall furnish and have available a 10 ft. light-weight metal straightedge with a rectangular cross-section of 2 by 4 in. at the paver at all times during paving operations. All courses shall be tested with the straightedge laid across the transverse joint parallel to the centerline and any variations from a true profile exceeding 3/16 inch shall be satisfactorily eliminated. The finished surface of the pavement shall be uniform in appearance, shall be free from irregularities in contour, and shall present a smooth-riding surface.

3.14 Surface Smoothness

3.14.1 The finished surfaces of the pavement shall be uniform in appearance, free from irregularities in contour and texture and shall present a smooth-riding surface. Smoothness evaluation applies to all hot mix asphalt concrete roadways receiving 1.5 inch or more in plan (compacted) thickness of HMA pavement.

Tests for conformity with the specified crown and grade shall be made by the Contractor immediately after initial compaction. Any variation shall be corrected by the removal or addition of materials and by continuous rolling.

The finished surface of the pavement, when measured with a 10-foot straightedge, shall not vary more than 1/4 inch for the surface course and 3/8 inch for the intermediate course measured perpendicular and parallel to the centerline. If, in the opinion of the Engineer, the surface visually appears wavy, but meets the surface tolerance test with the 10-foot straightedge, the Engineer reserves the right to additionally test with the use of Inertial Profile Equipment which records cumulative vertical deviations per unit length using a statistic called International Roughness Index (IRI). The City of Manchester upset limit for IRI is set at 135 in/mile using similar equipment that NHDOT specifies in their Quality Assurance HMA projects.

After the completion of final rolling, the smoothness of the course shall again be tested; humps or depressions exceeding the specified tolerances shall be immediately corrected by removing the defective work and replacing with new material, as directed by the Engineer. This shall be done at the Contractor's expense.

Skin patching will not be permitted.

When profile corrections are required, the Contractor shall use one or more of the following corrective methods:

a. Removing and replacing the entire pavement thickness;
b. Diamond grinding or micro milling;
c. Overlaying (not patching) with the specified surface course;
d. Removing the surface by milling and applying a lift(s) of the specified course(s);
e. Use of other methods that will provide the desired results;

The corrective method(s) chosen by the Contractor shall be performed at the Contractor's expense, including all necessary equipment and traffic control. Areas of removal and replacement shall be removed the full width of the lane. The removal areas shall begin and end with a transverse butt joint which shall be constructed with a transverse saw cut perpendicular to the centerline. Replacement materials shall be placed in sufficient quantity so the finished surface will conform to grade and smoothness requirements. The corrective area shall conform to all material and density specification requirements. When the corrective work consists of an overlay, the overlay shall cover the full width of the pavement including shoulders. The area overlaid shall begin and end with a transverse butt joint which shall be constructed with a transverse saw cut and asphalt removal. All materials shall meet contract requirements. The overlay shall be placed so the finished surface will conform to grade and smoothness requirements. The overlaid area shall be compacted to the specified density.

The Engineer shall retest any sections where corrections were made to verify that the corrections produced a surface that conforms to the grade and smoothness requirements

3.15 Uniformity

3.15.1 The HMA mat shall be smooth, dense, and uniform. Uniformity is generally affected by Thermal and/or Aggregate segregation.

If segregation is evident and discernable by either the Contractor or the Engineer, the Contractor shall immediately cease production and take steps to correct and eliminate the cause(s) of the segregation to the satisfaction of the Engineer.

The Contractor shall review all potential causes of segregation as it relates to its operation, including but not limited to HMA Plant issues, loading and transportation issues, placement issues, thermal segregation, and hand work. The Contractor shall employ additional investigation methods and make the necessary changes in their operation such that segregation is eliminated and mat uniformity is acceptable.

3.16 Shaping Edges

3.16.1 While the surface is being compacted and finished, the Contractor shall carefully trim the outside edges of the pavement to the proper alignment. Edges shall be beveled while still hot with the back of a lute or smoothing iron and thoroughly compacted by tampers or by other satisfactory methods.

3.17 Thickness

3.17.1 The thickness requirements contained herein shall apply only when each pavement layer is specified to be a uniform compacted thickness of 1 inch or greater. Thickness shall be evaluated for acceptance by the Engineer to the requirements shown on the plans. Measurements of thickness may be checked periodically by the Contractor in following their QC system for field operations. Measurements of thickness for acceptance shall be made by the Engineer using four-inch minimum diameter pavement cores removed also for subsequent density measurement.

The finished surfaces of each HMA pavement course shall not vary from the specified cross sections shown on the contract drawings by more than one quarter (1/4) of an inch. The Contractor shall correct pavement areas varying in excess of this amount by removing and replacing the defective work or as ordered by the Engineer.

Skin patching will not be permitted.

3.18 Grade

3.18.1 The finished surface of the pavement shall not vary from the grade line elevations as shown on the plans by more than 1/2 inch. The Contractor shall remove deficient areas and

replace with new material. Sufficient material shall be removed to allow at least 1.5 inches of hot mix asphalt to be placed. Skin patching for correcting low areas shall not be permitted. High points may be ground off.

3.19 Opening to Traffic

3.19.1 No vehicular traffic or loads shall be permitted on the newly completed pavement until adequate stability has been attained and the material has cooled sufficiently to an internal temperature of 140° F or less. If the climatic or other conditions warrant, or if the PGAB manufacturer recommends, the period of time before opening to traffic may be decreased or extended at the discretion of the Engineer.

3.20 Quality Acceptance of HMA

3.20.1 All acceptance sampling and testing necessary to determine conformance with the requirements specified in this section will be performed by the Engineer at no cost to the Contractor, unless otherwise stated herein. Testing organizations performing these tests shall meet the requirements of ASTM D 3666. All equipment in Contractor furnished laboratories shall be calibrated and verified by a testing organization prior to the start of operations. Such verification/certification shall be furnished to the Engineer prior to production or affixed to the equipment. Engineer's testing personnel shall be certified by the New England Transportation Technician Certification Program (NETTCP).

3.20.2 Plant-Produced Material. Plant-produced material shall be sampled and tested for VMA, gradation, asphalt binder content, and air voids (Superpave at N_{design}), on a lot basis. The Engineer's testing personnel shall be certified by the New England Transportation Technician Certification Program (NETTCP), as HMA Plant Technicians. Sampling shall be from material deposited into trucks at the plant or from trucks at the job site.

A lot will consist of one day's production from a single production facility;

3.20.2.1 Sampling. Sufficient material for analysis and preparation of test specimens will be sampled by the Engineer on a random basis, in accordance with the procedures contained in ASTM D 3665. A minimum of one set of laboratory compacted specimens will be prepared for each lot in accordance with AASHTO T 312, at the design number of gyrations required by the JMF. Each set of laboratory compacted specimens will consist of two test portions prepared from the same field sample.

The sample of hot mix asphalt may be put in a covered metal tin and placed in an oven for not more than 30 minutes to maintain the heat. The compaction temperature of the specimens should be as specified in the JMF.

In addition to the HMA samples, the Contractor shall take one, one-quart sample of the PG binder used to produce the hot mix asphalt at the start of the work. The PG sample shall be turned over to the Engineer on the first day of project production.

3.20.2.2 Testing.

a. Bulk Specific Gravity - Sample specimens shall be tested for bulk specific gravity in accordance with AASHTO T 166 or T 275, whichever is applicable, for use in computing air voids and density. Air voids shall be computed in accordance with AASHTO T 269;

b. Gradation and Asphalt Binder Content - The gradation and asphalt binder content of the mixture shall be measured for each lot in accordance with the following:

   i. **Asphalt Binder Content** - A minimum of three (3) extraction tests shall be performed in accordance with AASHTO T 164 or AASHTO T 308 for determination of asphalt content. The weight of ash portion of the extraction test, as described in AASHTO T 164, shall be determined as part of the first extraction test performed at the beginning of plant production; and as part of every tenth extraction test performed thereafter, for the duration of plant production. The last weight of ash value obtained shall be used in the calculation of the asphalt content for the mixture. If utilizing AASHTO T 308 for asphalt content determination, the calibration process and calibration factor, as described in AASHTO T 308, shall be determined as stated, prior to acceptance testing. Verification shall be performed as part of every twentieth test performed thereafter or when changes in the mix are apparent.

   ii. **Gradation** - Aggregate gradations shall be determined from mechanical analysis of extracted aggregate in accordance with AASHTO T 30 and AASHTO T 27 (Dry Sieve). When asphalt content is determined by the nuclear method, aggregate gradation shall be determined from hot bin samples on batch plants, or from the cold feed on drum mix or continuous mix plants, and tested in accordance with AASHTO T 27 (dry sieve) using actual batch weights to determine the combined aggregate gradation of the mixture.

c. The Dust-to-Effective Asphalt ratio shall be determined once for each lot from the mechanical analysis of extracted aggregate and the asphalt binder content. The Dust-to-Effective Asphalt ratio shall be determined by the Engineer in accordance with AASHTO PP 28-02.

d. The Theoretical Maximum Specific Gravity of the mixture shall be measured for each lot in accordance with AASHTO T 209, Type C, D, or E container. Samples shall be taken on a random basis in accordance with ASTM D 3665. The value used in the field placed void computations shall be the average of the maximum specific gravity measurements for the street paved.

e. Temperatures shall be checked, at least three times per lot, at necessary locations to determine the temperatures of the dryer, the asphalt binder in the storage tank, the mixture at the plant, and the mixture at the job site.

f. VMA and air voids, for each plant field sample, will be determined by the Engineer in accordance with the applicable AASHTO test method. The VMA, and air voids for each lot shall be computed by averaging the results of the two test specimens representing that lot.

3.20.2.3 Acceptance of Plant Produced HMA. Acceptance of plant produced HMA material will be based upon plant air voids, gradation, asphalt binder content, and temperature, and shall be determined by the Engineer in accordance with these specifications.

3.20.3 Field Placed HMA Material. HMA material placed in the field shall be tested for both joint and mat density on a completed street or public facility basis. The Engineer may conduct any necessary testing to monitor that the specified density, uniformity and smoothness is being achieved. A properly correlated nuclear gauge may be used to monitor the pavement density in accordance with ASTM D2950.

A lot will consist of an individual street; where more than one plant is simultaneously producing material for, the job, the lot sizes shall apply separately for each plant.

3.20.3.1 Sampling. Samples shall be neatly cut with a core drill. The cutting edge of the core drill bit shall be of hardened steel or other suitable material with diamond chips embedded in the metal cutting edge. The minimum diameter of the sample shall be 4 inches. The minimum diameter of the joint samples shall be 6 inches. Samples that are clearly defective, as a result of sampling, shall be discarded and another sample taken. The Engineer or the Owner's agent shall furnish all tools, labor, and materials for cutting samples and filling the cored pavement. Pavement cores will be taken upon project street/public facility completion to determine the average percent density. Cores will be taken randomly by the Engineer on the basis of five cores for mat density and three cores for longitudinal joint density per one thousand (1,000) tons of material placed. A minimum of five core samples for mat and three core samples for joint density will be removed from each street. The average density of the core samples will be used to determine the density of the street. The removal and patching of cores shall be paid for by the Engineer. Cored holes shall be filled in a manner acceptable to the Engineer and within one day after sampling. Resampling of pavement shall be in accordance with applicable provisions of the NETTCP Quality Assurance Technologist Manual, latest edition.

3.20.3.2 Testing. The bulk specific gravity of each cored sample will be measured by the Engineer in accordance with AASHTO T 166 or T 275, whichever is applicable. The theoretical maximum specific gravity shall be the average maximum specific gravity for the street in accordance with the plant-produced material section. The theoretical value used for the percent density of the core samples shall be the average of the measurements for maximum specific gravity for the street. The percent density of each sample will be determined in accordance with AASHTO T 269, using the bulk specific gravity of each sample and the average theoretical maximum specific gravity.

Retesting of pavement shall be in accordance with applicable provisions of the NETTCP Quality Assurance Technologist Manual, latest edition.

a. **Mat Density**. Five (5) four or six inch diameter cores of finished longitudinal joint will be taken by the Engineer or the Engineer's representative from each street or public facility. Core locations will be determined by the Engineer on a random basis in accordance with procedures contained in ASTM D 3665. Cores shall not be taken closer than 1 foot from a longitudinal joint and 10 feet from a transverse joint.

b. **Joint Density**. Three (3) six inch diameter cores of finished longitudinal joint will be taken by the Engineer or the Engineer's representative from each street or public facility. Core locations will be determined by the Engineer on a random basis over the joint, not adjacent to the joint.

3.20.3.3 Acceptance of Field Placed HMA. Acceptance of field placed HMA material will be based upon mat and joint densities, thickness, uniformity, surface smoothness, grade, and temperature, and shall be determined by the Engineer in accordance with these specifications.

3.21 Replacement

3.21.1 If any imperfect places are found in any course, the Contractor shall remove the unsatisfactory material and replace it with satisfactory material after coating the exposed edges with suitable bituminous material as described in Sections 401.3.13.5 and 401.3.13.6 as directed by the Engineer.

3.21.2 The Engineer may at any time, notwithstanding previous plant acceptance, reject and require the Contractor to dispose of any batch of hot mix asphalt which is rendered unfit for use due to contamination, segregation, incomplete coating of aggregate, or improper mix temperature. Such rejection may be based on only visual inspection or temperature measurements. Similarly, the Engineer may at any time, notwithstanding field acceptance for mat density, reject and require the Contractor to correct any HMA pavement that was placed with unacceptable mat uniformity or paving joints due to low density, segregation, improper elevation, or tearing.

In the event of such rejection, the Contractor and Engineer may take random split samples of the area(s) in question in the presence of the Engineer, and if it can demonstrate in the laboratory, in the presence of the Engineer, that such material/pavement was erroneously rejected, payment will be made for the material at the Contract Unit Price.

3.22 Application of Requirements

3.22.1 Except as specifically noted, these construction requirements shall apply equally to all courses.

3.23 Finished Appearance

3.23.1 Any bituminous material remaining on exposed surfaces of curbs, sidewalks or other masonry structures shall be removed by sandblasting or other acceptable means at the Contractor's expense within 24 hours of notification.

Method of Measurement

4.1 Plant mix bituminous pavement will be measured by the ton to the nearest 0.1 ton, and in accordance with Section 108.01. Batch weights will be permitted as a method of measurement only when the provisions of Section 401.3.8.3 are met, in which case payment will be based on the cumulative weight of all the batches. The tonnage shall be the weight used in the accepted pavement and no deduction will be made for the weight of bituminous material or additives in the mixture.

4.1.1 Hot bituminous pavement, machine or hand method (night), will be measured in the same manner as Section 401.4. No separate measurement will be made for lighting necessary or overtime required due to night operations at the plant or at the site.

4.1.2 Due to possible variations in the specific gravity of the aggregates and to possible field changes in areas to be paved, the tonnage used may vary from the proposal quantities and no adjustment in Contract Unit Prices will be made because of such variation.

4.1.3 No adjustment in Contract Unit Prices will be made due to liquid asphalt price fluctuations.

4.1.4 Bituminous concrete removed because of faulty workmanship or admixture of foreign materials, will not be included in the pay tonnage.

4.2 Adjustment Pay Schedule for Density

4.2.1 The pay factor based on the density adjustment schedule will be applied to the bid price per ton for compacted mixtures greater than or equal to 1-1/2 inches thickness as shown in the Contract Unit Prices.

Table 401- 7 HMA Mat Density Adjustment Schedule

Average Percent of Maximum Density (minimum 5 samples)	Percent Payment
100.0 - 98.1	98
98.0 - 95.0	102
94.9 - 92.0	100
91.9 – 89.0	90
88.9 – 87.0	75
86.9 or less	50% or rejection

4.2.2 The pay factor based on the longitudinal joint (LJ) density adjustment schedule will be applied to the bid price per ton for compacted mixtures greater than or equal to 1 1/2 inches thickness as shown in the Contract Unit Price.

Table 401- 8 HMA Longitudinal Joint Density Adjustment Schedule

Average Percent of Maximum Density (minimum 3 samples)	Percent Payment
100.0 - 98.1	98
98.0 - 95.0	102
94.9 - 90.0	100
89.9 - 89.0	90
88.9 - 88.0	80
87.9 - 87.0	70
86.9 or less	50% or rejection

4.2.3 The total hot mix asphalt adjustment will be based on the weighted sum as follows:

.60 Mat Adjustment + .40 LJ Adjustment = Total HMA Adjustment

When the construction of the pavement does not include the construction of a longitudinal joint (LG), the payment adjustment will be based on Table 401- 7 only, no weighted sum will be calculated.

Any bonus will be credited against any payment adjustment in the Contract for HMA, but in no case will the payment for HMA items exceed 100%.

Basis of Payment

5.1 All work performed and measured as prescribed above will be paid for as provided in the respective sections for each type specified.

5.2 Tack coat material ordered under Section 401.3.10.8 will be subsidiary to the paving items.

5.3 Approved bituminous material ordered for the coating of contact surfaces and joints as specified in Section 401.3.13.5 will be subsidiary.

5.4 Joint Adhesive ordered under Section 401.3.13.6 and other asphalt cement items will be subsidiary to the paving.

5.5 Plant or project site lighting for hot bituminous pavement, machine or hand method (night), or overtime required due to night operations will be subsidiary to the paving items.

5.6 No additional compensation will be made to the Contractor for work outlined in 3.11.2.8.

SECTION 403 -- HOT ASPHALT PAVEMENT

Description

1.1 This work shall consist of constructing one or more courses of hot mix asphalt (bituminous pavement) on a prepared base as shown or ordered. The methods may be classified as hand, machine, or temporary.

1.1.1 Paving of sidewalks, drives and drive aprons shall be by machine method where practical.

1.1.2 Hand method shall include only the paving of raised islands, slopes, areas between rails at railroad crossings, control patch between granite curb and pavement, and paving of 25 tons or less added after the completion of paving operations.

1.1.3 Machine method shall include all paving not classified as hand method.

1.2 This work shall consist of constructing hot mix asphalt pavement and will be indicated in the item description. The location shall be as shown on the plan or as provided by the Engineer.

Materials

2.1 Materials and their use shall conform to the requirements of Section 401 .

2.2 Temporary pavement shall conform to Table 401- 1. Thickness shall be as shown on the plans or as ordered by the Engineer.

Construction Requirements

3.1 Construction requirements shall be as prescribed in and within any Special Provisions of the Contract.

3.2 For temporary pavement only, amend portions of Section 401 :

3.2.1 The Adjustment Pay Schedule for Density of Section 401.4.2 will not be applicable

3.3 Temporary pavement shall be removed when no longer needed at no additional cost to the City.

Method of Measurement

4.1 Hot mix asphalt will be measured as prescribed in Section 401 .

Basis of Payment

5.1 Unless otherwise specified in any Special Provisions of the Contract, payment for hot mix asphalt pavement will be paid as follows:

5.1.1 The accepted quantities of hot mix asphalt will be paid for at the Contract Unit Price per ton for the mixture, complete in place.

5.1.2 The accepted quantities of hot mix asphalt, machine or hand method (Night) will be paid for at the Contract Unit Price per ton for the mixture, complete in place.

5.1.3 No separate payment will be made for any costs of plant or project lighting, or overtime for night work needed due to night operations.

5.2 Bridge wearing course will be paid under item 403.11, machine method.

5.3 Hot mix asphalt bridge pavement, hot mix asphalt base course of the depth and additional materials specified will be paid for at the Contract Unit Price per ton, complete in place.

5.4 The accepted quantity of temporary hot mix asphalt will be paid for at the Contract Unit Price per ton complete.

5.4.1 Removal of the temporary pavement will not be paid for under other items of the Contract but will be subsidiary.

Pay Items and Units, Section 403 -- Hot Asphalt Pavement :

403.111	Hot Mix Asphalt 25.0mm (1”), Machine Method	Ton
403.112	Hot Mix Asphalt 19.0mm (3/4”), Machine Method	Ton
403.113	Hot Mix Asphalt 12.5mm (1/2”), Machine Method	Ton
403.114	Hot Mix Asphalt 9.5mm (3/8”), Machine Method	Ton
403.115	Hot Mix Asphalt 19.0mm (3/4”) Winter Binder, Machine Method	Ton
403.12	Hot Mix Asphalt, Hand Method	Ton
403.13	Hot Mix Asphalt (High Strength), Machine Method	Ton
403.911	Hot Mix Asphalt Bridge Pavement, 1” Base Course, Machine Method	Ton
403.98	Hot Mix Asphalt Leveling, Machine Method	Ton
403.99	Temporary Hot Mix Asphalt	Ton

SECTION 404 --PAVEMENT RESTORATION

Description

1.1 This work shall consist of the permanent restoration of pavement and base materials removed to facilitate the construction of sewer, drainage and other underground facilities within the limits of existing roadways and easements.

1.2 This work shall consist of the milling existing pavement at various depths to facilitate the repair of the pavement surface.

1.3 This work shall also consist of the temporary restoration of pavement as designated on the plans or ordered.

Materials

2.1 Pavements shall conform to the requirements of Section 403 -- Hot Asphalt Pavement. Base materials shall conform to the requirements of Section 304 -- Aggregate Base Course. Asphalt emulsion shall conform to RS-1 as specified in Section 702 .

Construction Requirements

3.1 Restoration, Trench Patch, Full Depth

3.1.1 Areas where existing aggregate base material has been disturbed for construction of underground structures or replacement of unsound material the existing pavement shall be saw cut. The saw cut line shall be back from the top of the trench walls so that a minimum of 2 feet of new pavement will be placed over undisturbed base material.

3.1.1.1 The pavement shall be cut to a neat line with a diamond saw or as approved by the Engineer. Corners shall not be overcut.

3.1.1.2 Existing pavement and any temporary material shall be removed from within the limits of the final saw cuts.

3.1.2 Pavement shall be placed in accordance with the requirements of 401.3.10.

3.1.2.1 Pavement for full depth restoration shall be constructed to a depth equal of the thickness of the existing pavement (4 inches minimum).

3.1.2.1.1 The compacted base course shall be 1.5 inch less in thickness than the total thickness of the existing pavement (2.5 inches minimum).

3.1.2.1.2 The compacted wearing course shall be 1.5 inches in thickness.

3.1.2.2 Where and overlay is proposed in a full depth restoration area, base pavement mix shall be constructed to a depth equal to the total thickness of the existing pavement (base flush). Final overlay course shall be the wearing course. Total depth of pavement placed shall be a minimum of 4 inches.

3.1.2.3 The face of all joints shall be painted with asphalt emulsion immediately prior to placing the new pavement.

3.1.2.4 Pavement for temporary restoration shall be single course pavement, hand method, 1-1/2 inches in thickness and shall be constructed within the limits of the initial pavement cuts.

3.1.3 Aggregate base course materials shall be placed in accordance with the requirements of 304.3.4.

3.1.3.1 Base course materials shall consist of gravel and crushed gravel and shall be constructed for the full width of the trench to the undisturbed material.

3.1.3.1.1 The compacted depth of the gravel course shall be 12 inches.

3.1.3.1.2 The compacted depth of the crushed gravel course shall be 9 inches. When temporary pavement restoration is to be constructed, the compacted depth of the crushed gravel course shall be 10-1/2 inches.

3.1.3.1.3 In lieu of the 12 inch gravel course, a total depth of 18 inches of crushed gravel may be constructed, except that roadways typically having 9 inches of crushed gravel and 12 inches of gravel, must be restored in kind.

3.2 Restoration, Milled Patch

3.2.1 Areas of localized surface distress or areas of poor condition shall be milled (cold planed) to provide a recess for a pavement patch.

3.2.1.1 The area to be milled shall be minimum of 2 feet from any existing joint or to limits as directed by the Engineer.

3.2.1.2 The limits of the milling area shall be adjusted so that the longitudinal edges (edges parallel to the flow of traffic) are not located within vehicle wheel paths.

3.2.1.3 Existing pavement pieces, pavement millings and any temporary material shall be removed from within the limits of the final patch area.

3.2.1.4 Patch area shall be swept clean prior to placement of pavement

3.2.1.5 Milling depth shall be as per plan or as directed by the Engineer. This may include complete removal down to the existing aggregate base.

3.2.2 Pavement shall be placed in accordance with the requirements of Section 401 -- Plant Mix Pavements - General.

3.2.2.1 Hot mix asphalt for permanent patching shall be constructed to a thickness equal of the depth of milling.

3.2.2.2 Pavement patches milled down to existing aggregate base material shall be constructed to a depth equal to the total thickness of the existing pavement (4 inches minimum).

3.2.2.3 The face of all joints and all existing paved surfaces shall be painted with asphalt emulsion immediately prior to placing the new pavement.

3.3 All work shall be promptly completed and shall be maintained until the project has been accepted.

3.4 Pavement for temporary restoration shall be single course pavement, 1-1/2 inches in thickness and shall be constructed within the limits of the initial pavement cuts.

Method of Measurement

4.1 Unless otherwise shown on the plans or approved, the maximum allowable widths for computing pavement restoration for pipe construction shall be as follows:

Table 404- 1 Pavement Restoration, Pay Limit for Trenches

For Trenches 0 to 10 Feet Deep:

Pipe I.D.	Base Materials	Pavement
Up to 12 inches	6 feet	10 feet
12 inches-24 inches	7 feet	11 feet
Over 24 inches	8 feet	12 feet

For trenches over 10 feet deep, add 0.5 feet of width for each additional foot of depth.

4.2 Unless otherwise shown on the plans or approved, the maximum allowable diameters for computing pavement restoration for structures, shall be as follows:

Table 404- 2 Pavement Restortation, Pay Limit for Structures

For Excavations 0 to 10 Feet Deep:

Structure I.D.	Base Materials	Pavement
4 feet	7 feet	11 feet
5 feet	8 feet	12 feet
6 feet	9.5 feet	13.5 feet
7 feet	10.5 feet	14.5 feet
8 feet	11.5 feet	15.5 feet

For excavations over 10 feet deep, add 1 foot to the diameter for each additional foot of depth.

4.3 Restored areas will be measured by the square yard of pavement to the nearest 0.1 of a square yard in accordance with 4.1and 4.2.

4.4 Milled and patched areas as shown on the plans or ordered will be measured by the square yard to the nearest 0.1 square yard as determined by the actual surface measurements of the lengths and widths of the pavement areas removed.

4.4.1 The nominal depth of material removed will be as shown on the plans or actual field measurement.

Basis of Payment

5.1 The accepted quantities of pavement restoration will be paid for by the square yard.

5.2 The accepted quantities of pavement patching to the nominal depth specified will be paid for at the contract unit price per square yard.

5.3 No separate payment will be made for any cost of project lighting or overtime necessary due to night operations.

5.4 Milling of pavement in preparation for patching will be considered subsidiary to the work.

5.5 Sweeping and cleaning of milled areas shall be subsidiary.

5.6 Unless otherwise specified in the Contract, pavement saw cuts in connection with this work shall be subsidiary.

Pay Items and Units, Section 404 --Pavement Restoration:

404.1	Pavement Restoration, Utility Patch, Full Depth	S.Y.
404.20	Pavement Restoration, Milled Patch , Full Depth	S.Y.
404.2_	Pavement Restoration, Milled Patch , _ Inch Depth	S.Y.

SECTION 409 – FOG SEAL

Description

1.1 Work Shall consist of the application of rejuvenating asphalt emulsion (fog seal) to seal fine cracks in the pavement surface and reduce oxidation.

Materials

2.1 The asphalt emulsion, **CMS-1PF**, shall contain a polymer and conform to the following specifications. The emulsion shall be certified as meeting this specification from the manufacturer, and shall not be diluted prior to application.

Table 409 - 1 Material Properties

Property	Test Procedure (AASHTO)	Specification (min)	(max)
Emulsion Properties			
Viscosity, Saybolt-Furol, @ 77°F, SFS	T59	10	100
Storage, 24 hour, %	T59		1
Oil Distillate, %	T59		0.5
Sieve Test, %	T59		0.1
Residue by Distillation(1) @350°F, % Residue by Distillation, % by weight	T59	30	
Residue Properties From Distillation	T59		
Penetration @ 4C, 200g weight, 60 sec Residue by Distillation, % by weight	T49	30	
Residue Properties From Low Temp Evaporation	PP72-11, Procedure B		
Dynamic Shear, G*/sin @ 64oC, kPa	T315	Report Only	
Polymer Properties			
Swelling in rejuvenating agent, % max weight increase: 48 hrs	ASTM D471 (2)		40%
Tensile Strength (psi)	ASTM D412a (3)	800	
Glass Transition Temperature (Tg) – Midpoint by DSC (°C)	ASTM D7426 (4)	0	
Latex Density at 23°C (g/cm3)	ASTM D6937 (5)	1.00	1.05
Latex pH	ASTM E70 (6)	6.0	8.0
Test on Rejuvenating Agent			
Flash Point, COC, °F	T48	380	
Viscosity, 140°F, CST	201	50	175
Saturate, % by wt	ASTM D2007		30
Asphaltenes	ASTM D2007		1.0
Test on Residue			
Weight Change, %			6.5
Viscosity Ratio			3

(1) Exception to AASHTO T59: Bring the temperature on the lower thermometer slowly to 350°F plus or minus 10°F. Maintain this temperature for 20 minutes. Complete the total distillation in 60 plus or minus 5 minutes.

(2) Polymer Testing, Resistance to Swelling: Using a syringe, place 0.8 gm of latex into a 18 mm diameter DSR mold. Allow the sample to dry at ambient lab conditions (air conditioned) on the bench for 72 hours. Sample should be easily removable from the mold. Take the "button" out of the mold and place the sample into a forced air oven at 40°C (104°F) for 48 hours (on release paper). If at the end of the ambient dry, the sample sticks to the mold, place it into the oven and check it after 1-2 hours. After 48 hours, cool and weigh the sample to the nearest 0.0001 gram and record the weight. Put ½ inch of Rejuvenating Agent into a 3 oz penetration tin. Place the "button" on the Rejuvenating Agent, and add another ½ inch Of Rejuvenating Agent, so that the "button" is covered. Put the cap on the penetration tin and place it into the 40°C oven for 48 hours. Remove the "button" from the Rejuvenating Agent, blot surface of the "button" to remove excess Rejuvenating Agent, cool the "button" to room temperature and weigh it. Calculate weight gain of the "button", express as a %.

(3) To prepare the polymer film, dilute the waterborne polymer to 40% Total Solids Content and pour 57 g into a Teflon or silicone release mold of dimensions 7" X 7" X ¼". Allow to dry at 23°C (73 °F) and 50% RH (controlled conditions) for 7 – 10 days total time, during which time the film should be flipped around once, preferable after 3 or 4 days. The film should be transparent in the end. To drive out any residual water, place the film in an oven at 50°C for 30 min. Dried film thickness should be 25 mil +/- 5 mils. Discard films <20mil. Cut out dumbbell-shaped test specimens of dimension 75 mm total length, 25 mm mid-section (L) and 4 mm width of mid-section. Grip in Instron machine with gap size 1 inch, use 8 inch/min cross-head speed.

(4) Use between 3 – 30 mg dry polymer. Instrument used is TA Q2000Differential Scanning Calorimeter (DSC). Heating rate is 20°C/min.

(5) Replace "Emulsified Asphalt" with "Latex" in text of test method. The testing temperature used should be 25 +/- 3°C. The calculation in Section 7 should be as follows:

$$D = (Wf - Wt) * 0.1$$

$$S.G. = D/8.337$$

Where: Wf = Weight of filled cup (g), Wt = Weight of empty cup (g)

(6) A pH meter with automatic temperature measurement should be used in the evaluation with a calomel cell assembly or combination electrode. Calibration should be made using the procedure with the pH meter, according to ASTM method, prior to testing the pH of the latex. In Section 9, the procedure for measuring pH of the latex should be as follows:

- Place the electrode and probe into the dispersion that is to be measured and swirl the sample cup or beaker gently. (You may also use the probe in a stirring motion.)
- Wait for the reading to stabilize (usually less than a minute) and read/record this value. Note the temperature if not utilizing an ATC probe.
- Take the Electrode and ATC probes from the sample and rinse thoroughly with deionized water. Pat dry and place back into appropriate solution recommended by electrode manufacturer for storage.

2.2 Material Certifications and Testing

2.2.1 The Contractor, shall submit to the Engineer certified test results from the emulsion, polymer and rejuvenating agent manufacturers showing their products meet the specification. The Engineer will not accept test results dated more than 90 days from the date of bid opening.

2.2.2 Certifications and test results on the emulsion must be submitted to the Owner and approved by the Owner five (5) days prior to supplying material.

2.2.3 Prior to and during the project the Owner may require samples of the finished emulsion, rejuvenating agent and the polymer used in the emulsion to be submitted to the Owner designated laboratory for testing. All testing shall be at the Owner's expense.

2.3 Aggregate

2.3.1 The aggregate material shall be a dry, clean, dust and dirt-free, sound, durable, angular shaped manufactured specialty sand, such as that used as an abrasive (i.e., trade name "Black Beauty"), with a Mohs hardness of 6 to 8. The Contractor shall submit manufacturer's technical data and a manufacturer's certification indicating that the specialty sand meets the requirements of the specification to the Engineer prior to start of construction. The sand must be approved for use by the Engineer and shall meet the following gradation limits.

Table 409- 2 Aggregate Gradation

Sieve Size	Percentage Retained
No. 8 (2.38 mm)	0
No. 16 (1.19 mm)	0-10
No. 20 (0.84 mm)	0-25
No. 30 (0.60 mm)	15-50
No. 40 (0.42 mm)	20-45
No. 50 (0.30 mm)	5-35
No. 70 (0.21 mm)	0-5
No. 200 (0.07 mm)	0-2

Equipment

3.1 Pressure distributor. The emulsion shall be applied with a computer rate-controlled asphalt distributor. The equipment shall be in good working order and contain no contaminants or diluents in the tank. Spreader bar tips must be clean, free of burrs, and of a size to maintain an even distribution of the emulsion. Any type of tip or pressure source is suitable that will maintain predetermined flow rates and constant pressure during the application process with application

speeds under eight (8) miles per hour or seven hundred (700') feet per minute. Before use the equipment must be tested under pressure for leaks to ensure it is in good working order.

The distributor truck shall be equipped with a 12'foot minimum, spreader bar with individual nozzle control. The distributor truck shall be capable of specific application rates in the range of 0.05 to 0.25 gallons per square yard. These rates shall be computer-controlled rather than mechanical. The distributor truck shall have an easily accessible thermometer that constantly monitors the temperature of the emulsion, and have an operable mechanical tank gauge that can be used to cross-check the computer accuracy.

A distributor truck shall be provided, if necessary, equipped to effectively heat and mix the material to the required temperature prior to application. Heating and mixing shall be done in accordance with the manufacturer's recommendations. Care shall be taken not to overheat or over-mix the material.

The distributor shall be equipped to hand-spray the emulsion in areas identified either on the plans or by the Engineer, or not accessible to the distributor truck itself.

3.2 Aggregate spreader. The asphalt distributor truck shall be equipped with an aggregate spreader mounted to the distributer truck that can apply sand to the emulsion in a single pass operation without driving through the wet emulsion. The aggregate spreader shall be equipped with a variable control system capable of uniformly distributing the sand at the specified rate at varying application widths and speeds. The sander shall have a minimum hopper capacity of at least 3,000 pounds of sand. Push-type hand sanders will be allowed for use around lights, signs and other obstructions.

Construction Requirements

4.1 Surface Preparation. The Contractor shall clean the pavement surface prior to placement with a power broom or road sweeper. Clean any muddy or dirty areas by flushing with water. Allow surface to dry completely prior to applying asphalt emulsion.

4.2 Test Strip

4.2.1 Test Strip shall be performed in order to determine the optimum rate to achieve coating without runoff or delayed curing times. Typical application ranges are 0.06 to 0.15 gallons per square yard for emulsion and 0.5 pounds per square yard for the aggregate.

4.3 Application

4.3.1 Asphalt emulsion shall be applied at the target rate(s) established during the test strip. Emulsion temperature shall be between 120° to 160°F before application and be kept within this range during construction. Reheating of the asphalt emulsion shall be done when the material is allowed to cool below 110°F. Reheating shall be done at a rate of no more than 25° F per hour.

4.3.2 If target application rates are not the optimum application rates to achieve proper coating, or if the break time is too long or too short, the Engineer shall be immediately notified the Engineer. Contractor shall adjust and document the new application rate

4.3.3 Streaking of the asphalt emulsion on the road surface will not be accepted. If the streaking is occurring, all operations shall cease until the Contractor corrects the issue and the Engineer is satisfied that streaking has been eliminated.

4.3.4 During the application Contractor shall ensure there are no deficiencies resulting from poor workmanship, flushing, tracking from equipment, surface patterns, and sweeping.

4.3.5 Contractor shall insure all required areas have been treated, minimum overlap on longitudinal joints and construction joints has been achieved.

4.4 Weather Limitations. Place the fog seal when both the pavement and atmospheric temperature is 50°F and rising. Do not place fog seal if the pavement surface is wet, rain is forecasted within 24 hours of placement, impending weather conditions do not allow for proper curing, or if temperatures are forecasted below 32°F within 24 hours.

4.5 Pavement Temperature. Fog seal shall not be applied if existing pavement temperature is 140°F or above.

4.6 Finished Appearance. Any material splashed or sprayed onto exposed surfaces of curbs, sidewalks or other masonry structures shall be removed by sandblasting or other approved means at the Contractor's expense.

Method of Measurement

5.1 Fog seal will be measured by the square yards of material applied to the nearest 0.1 of a square yard.

Basis of Payment

6.1 The accepted quantity of fog seal will be paid for at the contract unit price per square yard complete in place including all costs for preparation, application and cleanup

6.2 No additional compensation shall be made for additional work required to apply asphalt emulsion to areas outside the normal operating width of the distributor.

6.3 Traffic Control, when not provided as separate pay item, shall be considered subsidiary.

Pay Items and Units, Section 409 – Fog Seal

409.1	Fog Seal Surface Treatment	SY

SECTION 410 – TACK COAT

Description

1.1 Application of emulsified asphalt for tack coat to a bituminous concrete surface or a portland cement concrete surface.

Materials

2.1 Emulsified asphalt shall be the type and grade specified or ordered and shall conform to the requirements of AASHTO M 140/ASTM D 997 or AASHTO M 208/ASTM D 2397.

Construction Requirements

3.1 Equipment. Equipment requirements for this work shall be as follows:

(a) **Applicator Truck**. The distributor shall be so designed, equipped, maintained and operated such that bituminous material at even heat may be applied uniformly on variable widths of surface up to 15 feet, at readily determined and controlled rates from 0.02 to 2.0 gallons per square yard, with uniform pressure, and with an allowable variation from any specified rate not to exceed 0.02 gallons. Distributor equipment shall include a tachometer, pressure gages, accurate volume measuring devices or a calibrated tank, and a thermometer for measuring temperatures of tank contents. Distributors shall be equipped with a power unit for the pump and full circulation spray bars adjustable laterally and vertically. The spray bar shall contain spray nozzles providing a fan-shaped spray pattern adjusted so the vertical axis is perpendicular to the pavement surface. The spray pattern and spray bar height shall be adjusted to provide a uniform application of the material without double coverage. The distributor shall be equipped with a mechanical device to adjust the spray height as material is discharged to keep a uniform height above the pavement for full coverage without overlapping. The distributor shall also be equipped with a hand-held spray attachment for applying the material to areas inaccessible to spray bars and to fill in irregular areas to provide full coverage. Approved sampling valves shall be installed in distributors and transport tank trucks to permit taking representative samples of the contents. The recommended location of the sampling valve is in the rear bulkhead of the tank, roughly one-third of the height above the bottom. The inlet pipe shall project into the contained liquid as shown in AASHTO T 40. At least one quart of material shall be drained off through the sampling valve and discarded before the desired sample is taken. New sample containers will be furnished by the Engineer. To prevent the loss of solvents, containers shall be sealed with a tight fitting cover immediately after being filled. The applicator truck shall be capable of providing digital outputs and a control strip shall be performed during the first day to ensure that the readout is accurate. The spray bar should be calibrated and able to be adjusted to within ± 10% of the design application rate. Coverage of the pavement must be even and uniform and, as such, it is important that there are no plugged nozzles on the spray bar. The asphalt distributor spray bar height, nozzle angle,

and pump pressure and check longitudinal and transverse spread rates shall be calibrated weekly according to ASTM D 2995. If different asphalt distributors are used, calibrate each before use on the project.

3.2 Limitations. Material shall not be applied on a wet surface or when weather conditions would prevent the proper application and curing of the coat. The quantities, rate of application, temperatures and areas to be treated, shall be approved before application. The minimum pavement surface temperature for application is 40°F in the shade, although it is recommended that the surface temperature be above 50°F.

3.3 Preparation of Surface to be Treated.

3.3.1 The existing surface shall be patched and shall be free of irregularities to provide a reasonably smooth and uniform surface to receive the treatment. Unstable corrugated areas shall be removed and replaced with suitable patching materials. The edges of existing pavements which are to be adjacent to new pavement shall be cleaned to permit the adhesion of tack coat

3.4 Application of Material.

3.4.1 Tack Coat.

3.4.1.1 Material shall be uniformly applied with an approved applicator. When ordered, a pressure distributor shall be used. The tack coat shall be applied to offer the least inconvenience to traffic and to permit one-way traffic without pickup or tracking of the material.

3.4.1.2 A tack coat shall be applied, prior to placement of pavement when the underlying pavement is weathered, has gone through a winter, or is contaminated with any bond inhibiting material. The rate of application of emulsified asphalt shall be between 0.02 and 0.08 gal/sq. yd., based on Table 410- 1. The Engineer my further modify the rate depending on the relative absorbence and texture of the pavement surface.

Table 410- 1 Tack Coat Application Rates

Existing Pavement Condition	Application Rate in Gallon/SY
New HMA	0.02 – 0.04
Oxidized HMA	0.04 – 0.06
Milled HMA	0.04- - 0.08

3.5 Finished Appearance.

3.5.1 Any material splashed or sprayed onto exposed surfaces of curbs, sidewalks or other masonry structures shall be removed by sandblasting at the Contractor's expense.

Method of Measurement

4.1 Tack coat placed will be measured by the square yard of surface treated or by the gallon of tack coat used in accordance with 108.01. Measurements by the square yard will be made to the nearest 0.1 square yard or by the gallon to the nearest whole gallon.

4.2 Paper or other material used to cover structures will be subsidiary.

Basis of Payment

5.1 The accepted quantities of tack coat will be paid for at the contract price per square yard, complete in place, including all costs for preparation of surfaces, application, and cleanup

5.2 Traffic Control, when not provided as separate pay item, shall be considered subsidiary.

5.3 Tack coat required under Section 404 will be subsidiary to the pavement restoration items.

5.4 Tack coat required under 401.3.10.8 will be subsidiary to the paving items.

Pay Items and Units, Section 410 – Tack Coat:

410.21	Emulsified Asphalt for Tack Coat	SY
410.22	Emulsified Asphalt for Tack Coat	Gallon

SECTION 411 -- PLANT MIX SURFACE TREATMENT

Description

1.1 This work shall consist of a leveling course when ordered and one or more courses of bituminous mixture constructed on an existing pavement.

1.2 This work when specified shall consist of a dual purpose single course bituminous mixture which acts as a shim course and a wearing course constructed on an existing pavement.

Materials

2.1 Materials and their use shall conform to the requirements of Section 401 as amended below:

2.1.1 Asphalt binder grade PG 64-28 shall be used.

2.1.2 Unless a volumetric mix design has been performed by the Contractor, the composition of the mixtures shall conform to historical gradation and binder content. Leveling course, AC Paver Shim, Paver Spot Drag Shims and ¾" PMST shall be Type H unless otherwise noted.

Table 411- 1 Composition of Mixtures – Master Ranges
Plant Mixed Surface Treatment

Sieve Size	Type H 3/8 in		
	Min	Desired	Max
3/8 in	95.0	100	100
No. 4	70.0	77	84.0
No. 8	54.0	59	65.0
No. 16	35.0	43	51.0
No. 30	20.0	28	36.0
No. 50	10.0	15	20.0
No. 100	5.0	8	11.0
No. 200	2.0	4	6.0
Asphalt Cement	6.25	6.7	7.25

Blotter materials shall be sand conforming to the requirements of Table 411- 2

Table 411- 2 Blotter Material

Sieve Size	Percent by Weight Passing
No. 4	100
No. 10	70 - 92
No. 200	0 - 6

Construction Requirements

3.1 Mixing plants shall be as prescribed in 401.3.

3.2 Mixing and storage shall conform to 401.3, 401.3.6 and 401.3.7 with the following modifications.

3.2.1 If the aggregate contains sufficient moisture to cause foaming in the mixture, it shall be removed from the bins. The quantity of cold aggregate fed to the dryer shall be governed by the ability of the dryer to completely remove the moisture from the aggregate, as determined by the Engineer.

3.3 Weighing and hauling shall conform to 401.3.8.

3.4 Placing shall conform to 401.3.10 with the following modifications:

3.4.1 The existing pavement shall be thoroughly dry, and free from all dust, dirt, and loose material. Sweeping with a power broom supplemented by hand brooming may be required.

3.4.2 When ordered, the existing pavement shall be treated with a tack coat as prescribed in 410.3.4.

3.4.3 A leveling course of hot bituminous concrete may be ordered to prepare the pavement for the finish course.

3.4.4 Any material delivered to the spreader having a temperature lower than 260 degrees F shall not be used.

3.4.5 In those areas where the edges of the pavement are adjacent to paved or bituminous treated shoulders, the asphalt paving machine shall be equipped to produce a feathered edge, parallel to the direction of traffic, and a uniform longitudinal line shall be maintained at the outer edge of the applied pavement.

3.4.6 All bridges included within the limits of the work shall be treated curb to curb.

3.4.7 When AC Paver Shim is specified, in areas of extreme deformation of the existing roadway, some amount of dragging is expected in placing this wearing course.

3.4.8 When Spot Drag Shims are specified, the intent is to fill and level localized ruts and deformations in the pavement. An 8' paver shall be used. Spots to be shimmed will be marked out by the Engineer. The length and widths of the spots will vary. It is expected that in most cases the pavement marking stripes will not be covered. Each spot shall be tacked before paving. Edges of shimmed areas shall be feathered by the paver. Luting or squaring up the ends of each spot will not be required.

3.5 Compaction shall conform to 401.3.12 with the following modifications.

3.5.1 If necessary to prevent traffic pickup of the mixture, the surface of the work shall be given a light dusting of blotter material just prior to rolling with pneumatic-tired roller. The surface shall be maintained thereafter by occasional back sanding and rolling as directed.

3.5.2 When more than 125 tons of mixture is being placed per hour, and additional steel-wheeled roller will be required.

3.5.3 Excess of blotter material remaining on the pavement and on paved shoulders shall be removed prior to acceptance of the project.

3.5.4 After rolling has been completed, the edges of the pavement shall be trimmed as directed to secure a uniform line.

3.6 Surface tolerances specified in 401.3.14 will not apply to plant mix surface treatment with the exception that the finished surface of the pavement shall be uniform in appearance, shall be free from irregularities in contour, and shall present a smooth-riding surface.

Method of Measurement

4.1 Plant mix surface treatment will be measured as prescribed in 401.4.

4.2 Blotter material used on plant mix surface treatment will be subsidiary.

Basis of Payment

5.1 The accepted quantities of leveling course and plant mix surface treatment will be paid for at the contract unit price per ton complete in place.

5.1.1 Tack coat material required under 3.4.2 will be subsidiary to the leveling course and plant mix surface treatment items.

Pay Items and Units, Section 411 -- Plant Mix Surface Treatment:

411.1	Hot Mix Asphalt Leveling Course	Ton
411.19	Hot Mix Asphalt Leveling Course (Night)	Ton
411.3	Plant Mix Surface Treatment(AC), Paver Shim	Ton
411.51	Plant Mix Surface Treatment, Paver Spot Grag Shim	Ton

SECTION 413 --HOT-POURED CRACK SEALANT

Description

1.1 This work shall consist of furnishing labor, equipment and materials necessary for the performance of all operations including re-shaping, cleaning, filling and sealing of random cracks in asphalt pavements, vegetation removed and sterilization of cracks where necessary at locations specified and/or as directed by the Engineer.

Materials & Equipment

2.1 Material shall be of the hot-poured type product as included on the New Hampshire Department of Transportation Qualified Products List or as approved by the Engineer.

2.1.1 Material not covered by an asphalt pavement overlay shall meet the requirements of AASHTO M324 (ASTM D6690) Type II.

2.1.2 Material covered by an asphalt pavement overlay shall be low modulus conforming to AASHTO M324 (ASTM D6690) Type IV except cone penetration shall be 110-150.

2.1.3 Material with fiber reinforced modified asphalt compound shall be designed for improved strength and performance

2.1.3.1 The asphalt binder shall consist of a blend of neat asphalt binder, chemically modified crumb rubber (CMCR), and a polymer package, all of which meet the following specifications:

a) The binder will meet PG 64-28E requirements after modification including PG grading requirements of AASHTO M320 and requirements of AASHTO TP70/MP19.

b) Modification, at a minimum, shall consist of 7% crumb rubber, and the maximum particle size for the recycled tire rubber shall be 80 mesh (#80 sieve)

c) The asphalt supplier shall provide testing for both the neat and modified asphalt binders. Testing results of modified binder shall be as noted in table 413-1:

Table 413- 1 Modified 64-28E with CMCR Test Results

Dynamic Shear Rheometer -Original	kPa >1.00 @ 64ºC. Fail temp = 76+ºC
Dynamic Shear Rheometer -RTFO	kPa >2.20 @ 64ºC. Fail temp = 76+ºC
Multiple Stress Creep Recovery	JNR (MSCR unit of measure): 3.2 E <0.5% @ 64º C R3200 (Average % Recovery): >70%
Dynamic Shear Rheometer -PAV	kPa <6000 @ 64ºC
Bending Beam Rheometer	Stiffness <300 @ -18º C. M-Value >0.300 @ -18º C

d) Fiber reinforcement used shall be of short length polyester fibers conforming to requirements in Table 413-2.

Table 413- 2 Polyester Fiber Reinforcement

Length[-1]	0.25 in. ± 0.02 in.
Elongation at break (ASTM D2256-90)	35% ± 3%
Melting Point (ASTM D3418-82)	>475 degrees F (246 degrees C)
Crimps/Inch (ASTM D3937-90)	None
Cross Section	Round
Denier (ASTM D1577-90)	4.5 Nominal dpf
Tensile Strength (ASTM D2256-90)	>70,000 psi
Diameter	0.0008 in.[-2]
Specific Gravity (ASTM D792-91)	1.32 to 1.40

[-1] At temperatures ranging from ambient to maximum finished product mix temperature
[-2]Subject to normal variations

e) The modified asphalt-fiber compound shall be mixed at a rate of 8% fiber weight to weight of asphalt cement.

2.1.3.2 A Manufacturer's certificate of material compliance will be furnished to the Department certifying conformance to the above material specifications, including the following:

1) Performance Grade of Unmodified Asphalt: PG 64-28S (standard) AASHTO M-320, Table 1;
2) 7% chemically-modified crumb rubber (CMCR) Composed of 100% 80-mesh recycled tire rubber;
3) 3-4% specially formulated polymer package;
4) Performance Grade of Modified Asphalt: PG 64-28E (able to withstand "extremely heavy" traffic loads);
5) 8% polyester reinforcing fibers.

2.2 Equipment used in the performance of the work required by this section of the specification shall be subject to the Engineer and maintained in a satisfactory working condition at all times.

a) Air compressors shall be portable and capable of furnishing not less than 100 cubic feet of air per minute and not less than 90 lbs per square inch pressure at the nozzle. The compressor shall be equipped with traps that will maintain the compressed air free of oil and water.

b) The unit used to melt the joint sealing compound shall be double boiler, indirect fired type. The space between the inner and outer shells shall be filled with a suitable heat transfer oil or substitute having a flash point of not less than 600 degrees F. The oil shall circulate to all sides and bottom of the material melting kettle. The kettle shall be equipped with a satisfactory means of agitating the joint sealer at all times. This may be accomplished by continuous stirring with mechanically operated paddles and/or by a continuous circulating gear pump attached to the heating unit. The kettle must be designed to be capable of agitating and pumping an 8% fiber content blend. The kettle must be equipped with thermostatic control calibrated between 200 degrees F. and 550 degrees F.

c) Melting kettles shall be a minimum of 750 gallons

d) Hot-air lances for blowing clean and drying cracks shall be an approved propane gas burner and compressed air device that does not allow the flame to touch the pavement. The lance shall have a minimum operating temperature of 2000 degrees F.

e) The wand applicator shall be connected to the holding tank through an applicator hose that ensures the safety of the operator and allows the operator to control the flow of material. A device shall be mounted to bypass material into the holding tank if the applicator nozzle is shut off.

f) Hand tools shall consist of brooms, shovels, metal bars with chisel shaped ends and any other tools which may be satisfactorily used to accomplish this work.

Construction Requirements

3.1 All cracks ordered treated shall be hot-air lance cleaned of dirt, foreign material, and loose edges. All cracks greater than 1/4 inch shall be blown free of loose material, dirt, vegetation, and other debris by high pressure air. Cracks showing evidence of vegetation after being blown out shall be additionally cleaned by appropriate hand tools and additionally blown out. All debris, vegetation, and water shall be removed to enhance adhesion of the crack sealing material. THIS WORK SHALL NOT BE DONE IN INCLEMENT WEATHER.

3.2 Material removed from the crack shall be removed from the pavement surface by means of a power sweeper or appropriate hand tools as required.

3.3 The hot-poured sealant shall be maintained in the kettle and applied at the temperature range specified by the manufacturer. The Contractor shall furnish the Engineer with copies of the manufacturer's literature indicating the application temperature range.

3.4 All asphalt-fiber sealant material shall be thoroughly mixed for a minimum of one hour before application can begin. To ensure a uniform fiber distribution in the sealant, and also to limit fluctuations in the application temperature of the blended material, the Contractor must have a full melter of sealant mixed, heated to the proper application temperature, and ready for testing at the start of each work day.

3.5 The hot-poured sealant shall be applied to the cracks using wand applicators within 5 minutes following hot-air lance cleaning. Distance between the hot air lance and the crack sealing unit should be no more than 50 ft. to eliminate reinvasion of water, debris, and other incompressible material.

3.6 Sealant shall tightly bond to the pavement. The sealant bond to the pavement shall be checked after it has sufficiently cooled. If the sealant does not bond to the pavement, sealant shall be removed and crack sealing operations discontinued until debonding problem is corrected.

3.7 No hot-air lance cleaning or crack sealing shall be performed on pavement that is wet, after sunset or before sunrise, when the ambient temperature is below 50 degrees F in shaded locations within the job area, or when weather conditions are otherwise unfavorable to proper construction procedures.

3.8 All work shall be performed in a neat manner. The sealant shall be allowed to cool sufficiently to prevent lifting, sticking, and tracking prior to returning the pavement segment to traffic.

3.9 The contents of the kettle shall be emptied at the end of each day and shall not be reused. Once that batch of sealant is emptied from the melter, crack sealing operations will cease for the remainder of the day. No new materials will be allowed to be added to the melter during the work day under any circumstances.

3.10 Sealant shall be delivered to the pavement cracks through a high pressure hose line and applicator shoe. Diameter of the applicator shoe is not to exceed 3.5 inches. Once the pavement cracks are sealed, the width of the sealant on the pavement (overbanding) shall be no greater than 3 inches. When traffic requires immediate use of the roadway, a boiler slag aggregate shall be broadcast over the cracks to prevent the sealant from being picked up.

Measurement

4.1 Hot-poured crack sealant will be measured by the gallon of material incorporated in the work.

k

Basis of Payment

5.1 The accepted quantity of hot-poured crack sealant will be paid for at the contract unit price per gallon complete in place.

Pay Items and Units, Section 413 --Hot-Poured Crack Sealant:

413.1	Hot-Poured Crack Sealant	Gallon
413.2	Hot-Poured Crack Sealant (Low Modulus)	Gallon
413.3	Hot-Poured Crack Sealant, Fiber Reinforced CMCR Asphalt	Gallon

SECTION 414 – MICRO-SURFACE SURFACE TREATMENT

Description

1.1 This work shall consist of preparing and applying thin asphalt overlay material (micro-surfacing), with or without mixture additives, which can restore the original service properties to worn but structurally sound pavements

1.1.1 Where required by the Engineer, additional Micro-surfacing mixture additives shall be utilized for the purpose of improving performance and durability.

Materials

2.1 Emulsified Asphalt. The emulsified asphalt shall be a quick-set, polymer-modified cationic type CSS-1H emulsion, and shall conform to the requirements specified in AASHTO M208 and ASTM 2397. It shall pass all applicable storage and settlement tests. The polymer shall be milled into the emulsion, or in the case of the HiMA (6% SBS) emulsion, may be pre-blended into the unmodified base asphalt (PG 64-28). The cement mixing test shall be waived for this emulsion.

2.2 Conventional Micro-Surfacing Residue Properties. Distillation of residue will be at a temperature of 350° F for 20 minutes. Softening Point (ASTM D36 or AASHTO T53) of the residue shall be not less than 140° F.

2.3 Fiber-Reinforced Micro-Surfacing Residue Properties. For fiber-reinforced mixtures, emulsion testing by distillation method (ASTM D5 or AASHTO T49) shall yield Penetration values of between 40 and 120 mm at 77° F, and a Softening Point (ASTM D36 or AASHTO T53) not less than 135° F.

2.4 HiMA (6% SBS) Micro-Surfacing Residue Properties. For HiMA mixtures, emulsion testing by distillation method (ASTM D5 or AASHTO T49) shall yield a Softening Point (ASTM D36 or AASHTO T53) not less than 170° F.

2.5 Aggregate.

2.5.1 General. The mineral aggregate used shall be of the type and grade specified for micro-surfacing. The aggregate shall be manufactured crushed stone such as granite, slag, limestone, chat, or other high quality aggregate or combination thereof.

2.5.2 Aggregate Physical Requirements

a. **Grading.** The aggregate including natural fines when tested by AASHTO methods T11 or T27 or ASTM C117 or C136, should meet the referenced gradation requirements.

b. **Deleterious Substances.** To limit the permissible amount of clay-like fines in an aggregate, a sand equivalency value of 65 or higher is required when tested by ASTM 2419.

c. **Soundness**. The aggregate shall have a weighted loss of not more than 15% when the sodium sulfate test is used, or 20% when the magnesium sulfate test is used.

d. **Hardness**. The aggregate wear, from resistance to abrasion, shall be a maximum of 35% when using AASHTO T96 or ASTM C131 test methods.

2.6 Water. Water furnished for earthwork, pavement courses, dust control, and incidental construction. Furnish water free of substances detrimental to the work including soluble salts.

2.7 Modifiers. Special quick-setting emulsifier agents shall be blended into the asphalt emulsion. The emulsified asphalt shall be so formulated that when the paving mixture is applied at a thickness of one inch with the relative humidity at not more than 50% and an ambient air temperature of at least 75° F, the material will cure sufficiently so that rolling traffic can be allowed in one hour with no damage to the surface, as verified by the Engineer.

2.8 Additives. A mineral additive conforming to AASHTO M17 shall be introduced to the aggregate and may be either non-air entrained Portland cement or hydrated lime that is free of lumps, or other approved mineral additive. It may be accepted upon visual inspection. The amount of mineral additive needed shall be determined by the laboratory mix design and will be considered as part of the material gradation requirement. A liquid field control additive may be introduced and blended with water to provide effective control of the required quick-set properties. This additive shall be made available by the chemical supplier or emulsion manufacturer, and certified to be compatible with the mixture.

Engineering Design

3.1 Before work commences, the Contractor shall submit a signed and certified mix design covering the specific material(s) to be used on the project. This design shall be performed by a qualified, independent laboratory. Once the materials are approved, no substitution will be permitted unless first tested and approved by the laboratory preparing the mix design and approved by the Engineer.

3.2 Mix Design.

3.2.1 General. The independent laboratory shall develop the job mix design and present certified test results for the Contractor and Engineer's approval. Compatibility of the aggregate and emulsion shall be verified by the mix design. The job mix formula shall meet standard ISSA A143 micro-surfacing mix design requirements. All component material used in the mix design shall be representative of the material proposed by the Contractor for use on the project.

3.2.2 Fiber-Reinforced Mix Design Fiber-reinforced mix designs shall be tested for flexibility utilizing the TxDOT Overlay Test (Tex-248-F) traditionally used for hot mix asphalts (HMA), and adapted for micro-surfacing as follows:

a. Section 2.1 -- constant maximum displacement should be increased from 0.025 in. to 0.050 in., 10 seconds (one cycle) to 60 seconds (one cycle).

b. Sections 4.1 and 4.1.1 -- to be disregarded as they are solely intended for HMA.

c. Section 4.2 – replaced in its entirety to read "Test Specimens – specimen length and width must match Figure 1 (cutting template), and specimen height must be 0.50 in. Make and cure the micro-surfacing overlay test specimens using similar methods and resulting in similar mixture composition and mix consistency as done for the TB 100 (Wet Track Abrasion) and TB 147 (Loaded Wheel Test) specimens.

d. Sections 5.1 and 5.2.3 – to be disregarded as they are solely intended for HMA.

e. Section 5.3.1 – only the first sentence shall apply ("Mount and secure the base plates to the mounting jig.")

f. Sections 5.4 and 5.7.1 – change 77 degrees F to 41 degrees F.

g. Section 5.7.2 – change 93% to 90% and add "specimens are required to meet 100 cycles minimum before reaching the 90% reduction."

3.2.3 In the event that new performance testing standards are developed to supersede the modified TxDOT Overlay Test standards outlined above, such new standards shall be submitted and approved by the Engineer.

3.2.4 Specifications. The Engineer shall approve the design mix and all micro-surfacing materials and methods prior to use. The component materials shall be within the following limits.

Table 414- 1 Component Tolerances

Residual Asphalt	5% to 9% by dry weight of aggregate
Mineral Additive	0.5% to 3% by dry weight of aggregate
Polymer Modifier Additives	as required to provide specified properties
Water	As required to produce consistency
Fibers	0.05% to 0.25% by dry weight of aggregate as required to meet the performance requirements of the TxDOT Overlay Test (Tex-248-F) as described above.

Table 414- 2 Recommended Aggregate Gradation

Sieve Size	Master Range Type II (1/4")	Master Range Type III (3/8")	Production Tolerance
3/8" (9.5 mm)	100	100	± 7.0 / ± 7.0
#4 (4.75 mm)	90 – 100	70 – 90	± 7.0
#8 (2.36 mm)	65 – 90	45 – 70	± 4.0
#16 (1.18 mm)	45 – 70	28 – 50	± 4.0
#30 (0.60 mm)	30 – 50	19 – 34	± 4.0
#50 (0.30 mm)	18 – 30	12 – 25	± 4.0
#100 (0.15 mm)	10 – 21	7 – 18	± 4.0
#200 (0.075 mm)	5 – 15	5 – 15	± 2.0

*Note: All aggregate percentages are based on the total weight of the aggregate.

Table 414- 3 Suggested Application Rates

Type II - Urban and Residential Streets:	
Single course	18-20 lb/SY
Cape seal wear course	25-28 lb/SY
Double course	28-32 lb/SY
Type III - Primary Routes	
Double course	30-36 lb/SY
wheel ruts	as required

Note: All application rates are dry aggregate weights exclusive of emulsion and all other additives.

Equipment

4.1 General. The equipment used by the Contractor shall be maintained in satisfactory working condition at all times to ensure a high quality product and include, but not be limited to the following:

4.2 Mixing Equipment.

4.2.1 The material shall be mixed by a self-propelled micro-surfacing mixing machine which shall be a continuous flow, continuous run mixing unit able to accurately deliver and proportion the aggregate, emulsified asphalt, mineral and field control additives, and water to a revolving multi-blade twin shafted mixer, and discharge the mixed product on a continuous flow basis.

4.2.2 The Contractor shall own or have available two (2) continuous flow, continuous run mixing machines to ensure highest quality, and to mitigate the effect of equipment breakdowns.

4.2.3 The machines shall have sufficient storage capacity for aggregate, emulsified asphalt, mineral and field control additives, and water to maintain an adequate supply to the proportioning controls.

4.2.4 The machines shall be equipped with self-loading devices which provide for the loading of materials while continuing to lay micro-surfacing, thereby minimizing construction joints.

4.3 Proportioning Equipment. Individual volume or weight controls for proportioning each material to be added to the mix, i.e., aggregate, emulsified asphalt, mineral and field control additives, and water shall be provided and properly marked. These proportioning devices are usually revolution counters or similar devices, and are used in material calibration and determining the materials output at any time.

4.4 Emulsion Pump. The emulsion pump shall be a heated, positive displacement type pump.

4.5 Spreading Equipment.

4.5.1 The surfacing mixture shall be spread uniformly by means of a mechanical type spreader box attached to the mixer, equipped with paddles to agitate and spread the materials throughout the box.

4.5.2 The spreader box width shall be capable of adjustment while paving in order to accommodate the changing width of some roadways without excessive overlaps.

4.5.3 A front seal shall be provided to insure no loss of the mixture at the road contact point. The rear seal and secondary strike-off shall act as the final strike-off, and both shall be adjustable. The mixture shall be spread to fill cracks and minor surface irregularities, and leave a uniform skid resistant application of material on the surface. The spreader box and rear strike-off shall be so designed and operated that a uniform consistency is achieved to produce a free flow of material to the rear strike-off.

4.5.4 The longitudinal joint where two passes join shall be neat in appearance, uniform and lapped.

4.5.5 All excess material shall be removed from the jobsite prior to opening the road.

4.5.6 The spreader box shall have suitable means provided to side-shift the box to compensate for variations in pavement width and longitudinal alignment.

4.5.7 A rut box shall be available to pre-fill wheel ruts when necessary prior to overlay to eliminate puddles or runoff interruption. The rut box shall be no less than 4’ wide and no more than 6’ wide.

4.5.8 Areas where machine screed cannot reach may be worked by hand with squeeges.

4.6 Auxiliary Equipment. The Contractor shall supply a regenerative vacuum sweeper for cleaning the pavement, and provide traffic control equipment; hand tools and any support equipment shall be provided as necessary to perform the work.

4.7 Screening Plant. All aggregate shall be rescreened immediately prior to being loaded onto micro-surfacing equipment. The screening plant shall be equipped with a 3/8" screen to remove all oversized aggregate, and shall be capable of discharging screened aggregate directly onto the support equipment. Any material discharged onto the ground must be rescreened prior to use.

4.8 Calibration. Each mixing unit to be used in the performance of the work shall be calibrated in the presence of the Engineer prior to construction, or previous calibration documentation covering the exact materials to be used may be acceptable provided they were made during the same calendar year. The documentation shall include the individual calibration of each material at various settings, which can be related to the machine metering devices.

Construction Requirements

5.1 Pre-paving Meeting and Control Strip

5.1.1 The Contractor and all subcontractors shall be available for a pre-paving meeting a minimum of seven days prior to construction activities to discuss the plan. At the meeting, the Contractor shall provide a Job Mix Formula (JMF) of the intended mixes, submittals of the intended crack seal, along with a Quality Control Plan (QCP). The submittals shall be approved by the Engineer prior to construction activities. The QCP shall provide information including but not limited to the following: Materials; Production Facility; Placement Equipment; Production and Field Personnel; Installation Plan; Quality Control Activities; and Traffic Control.

5.1.2 A Control strip will be required to ensure that the Engineer is satisfied with the installation quality including material properties and surface texture. The Control Strip may be a full day's production or a minimum of 1000 feet and must include a minimum of one (1) longitudinal joint. The material shall be installed in a similar location, with similar personnel, and similar equipment. If the materials, labor, or equipment change a new control strip will be required. A Control strip will be required for each Micro-surfacing material size and binder type placed.

5.2 Surface Preparation

5.2.1 All surface preparations shall be completed the Contractor prior to applying the wearing course. Cover all manhole covers, water boxes, catch basins and other such utility structures with plastic or building felt. Reference each for location and adjustment after paving.

5.2.2 All pavement markings shall be removed by approved methods which include:

a. High pressure water.
b. Steam or superheated water.
c. Mechanical devices such as grinders, sanders, scrapers, scarifiers and wire brushers.

5.2.3 Temporary pavement markings shall be installed with temporary marking tape or other means approved by the Engineer. All temporary marking tape shall be removable type and conform to Section 632 and shall be removed by the Contractor immediately prior to microsurface installation.

5.2.4 If required, a leveling course(s) shall be installed using a rut box to pre-fill any wheel ruts greater than 3/8 of an inch as measured from peak to trough prior or micro mill the peaks and fill the troughs as Directed by the Engineer. All costs associated with wheel path leveling or micro milling are incidental to this Section.

5.2.5 All cracks and joints greater than 1/4 inch wide shall be cleaned and sealed by routing and providing a slightly concave shape with material approved by the Engineer. Cracks greater than 3/4 inch shall be crack sealed but not routed. Crack sealing shall be performed in conformance with Section 413 – Hot-Poured Crack Sealant and is incidental to this Section. No over banding will be permitted. The Crack Sealant shall provide not less than 5% polyester reinforcing fibers (PG + fibers), or a polymer and crumb rubber modified asphalt cement including not less than 3% polymers, 7% recycled tire crumb rubber (80 mesh), and 8% polyester fibers (PCRM + fibers).

5.2.6 All surface irregularities less than 1/2" deep shall be filled with material approved by the Engineer.

5.2.7 Surface irregularities greater than 1/2" deep shall be milled to a depth of 1" and filled with conventional hot mix asphalt or alternative material approved by the Engineer.

5.2.8 The entire area to be overlaid shall be thoroughly clean. A regenerative air sweeper shall be utilized to provide both water blasting and vacuum capabilities. This should be done after the joints have been sealed.

5.2.9 The surface shall have no free moisture present or ponding water.

5.3 Weather Limitations. The minimum pavement surface temperature for application of the microsurface and is 45°F in the shade, although it is recommended that the surface temperature be above 50°F. No freezing conditions are allowed in the first 24 hours, as the emulsion-based products require about one day to fully cure.

5.4 Microsurface Application.

5.4.1 General.

5.4.1.1 The surface should be pre-wetted by fogging ahead of the spreader box when required by surface and ambient conditions. The rate of application of the fog spray shall be adjusted during the day to suit temperatures, surface texture, humidity, and dryness of the pavement surface.

5.4.1.2 The Micro-surfacing mixture shall be of the desired consistency upon leaving the mixer and no additional materials should be added. A sufficient amount of material shall be carried in all parts of the spreader at all times so that a complete coverage is obtained. Overloading of the spreader shall be avoided. No lumping, balling, or unmixed aggregate shall be permitted.

5.4.1.3 No streaks, such as those caused by oversized aggregate, will be left in the finished surface. If excessive amounts of oversized aggregates appear in the mix, the job will be stopped until the Contractor proves to the Engineer that the situation has been corrected.

5.4.2 Stockpile Management.

5.4.2.1 The Contractor shall take precautions to ensure that aggregate stockpiles do not become contaminated. The mineral aggregate shall be re-screened prior to being directly loaded onto Micro-surfacing equipment.

5.4.3 Joints.

5.4.3.1 No excessive buildup, uncovered areas or unsightly appearances shall be permitted on longitudinal or transverse joints. The Contractor shall provide suitable width spreading equipment to produce a minimum number of longitudinal joints throughout the project. When possible, longitudinal joints shall be placed on lane lines. Half passes and odd width passes will be used only in minimum amounts. If half passes are used, they shall not be the last pass of any paved areas.

5.4.4 Mix Stability.

5.4.4.1 The Micro-surfacing mixture shall possess sufficient stability so that premature breaking of the material in the spreader box does not occur. The mixture shall be homogeneous during and following mixing and spreading. It shall be free of excess water or emulsion, and free of segregation of the emulsion and aggregate fines from the coarser aggregate.

5.4.5 Handwork.

5.4.5.1 Areas which cannot be reached with the mixing machine shall be surfaced using hand squeegees to provide complete and uniform coverage. The area to be hand-worked shall be lightly dampened prior to mix placement. Care shall be exercised to leave no unsightly appearance from handwork.

5.4.5.2 The same type finish as applied by the spreader box shall be required. Handwork shall be completed immediately after the Micro-surfacing mixture is discharged from the spreader box.

5.4.6 Lines

5.4.6.1 Care shall be taken to ensure straight lines along curbs and shoulders. No runoff on these areas will be permitted. Lines at intersections will be kept straight to provide a neat workmanship appearance.

5.5 Quality Control

5.5.1 Materials

5.5.1.1 The Contractor will permit the Engineer to take samples of the aggregate and asphalt emulsion to be used in the project at the Engineer's discretion. Gradation and sand equivalency tests may be run on the aggregate, and residual asphalt content test run on the emulsion. Test results will be compared to specifications. Tests will be run by a qualified laboratory at the expense of the City. The City must notify the Contractor within 24 hours of receiving a failing test result if any test fails to meet the specifications.

5.5.2 Microsurface Mixture

5.5.2.1 Samples of the mixture shall be taken daily and may be taken directly from the mixing unit(s). Consistency and residual asphalt content tests shall be made on the samples and compared to the specifications. Tests will be run by a qualified laboratory at the expense of the Contractor. The Contractor shall notify the City within 24 hours of receiving a failing test result and cease placement immediately if any test fails to meet specifications.

5.5.2.2 The Engineer may use the recorder and measuring facilities of the equipment to determine application rates, asphalt emulsion content, mineral and field control additives, and water.

5.5.3 Non-Compliance

5.5.3.1 If any two successive tests fail on the stockpile material, the job shall be stopped. It is the responsibility of the Contractor, at his own expense, to prove to the Engineer that the conditions have been corrected. If any two successive tests on the mix from the same machine fail, the use of the machine shall be suspended. It will be the responsibility of the Contractor, at his own expense, to prove to the Engineer that the problems have been corrected and that the machine is working properly.

5.6 Opening to Traffic

5.6.1.1 Protect the wearing course from traffic until the operation is complete and the material has set-up sufficiently to resist tracking.

5.6.1.2 Special quick-setting emulsifier agents shall be blended into the asphalt emulsion. The emulsified asphalt shall be so formulated that when the paving mixture is applied at a

thickness of one half inch with the relative humidity at not more than 50% and an ambient air temperature of at least 75° F, the material will cure sufficiently so that rolling traffic can be allowed in one hour with no damage to the surface, as verified by the Engineer.

5.6.1.3 Allow treated areas to completely cure before opening to traffic. Cure is complete when clear water can be pressed out of the mix with a piece of paper without discoloring the paper.

5.6.1.4 Any excess micro-surfacing at project limits, including driveways and structures shall be removed before the end of each work day or opening to traffic. All locations will be subject to final approval by the Engineer.

Method of Measurement

6.1 Microsurface Treatment placed shall be measured by the square yard of road surface treated. Measurements shall be to the nearest 0.1 of a square yard.

Basis of Payment

7.1 Accepted quantities of Microsurface Treatment will be paid for at the contract unit price per square yard, complete in place including placement and clean up.

7.2 Pavement patching, crack sealing, structure adjustment or structure repair (if required) prior installation will be paid for under the appropriate Sections or be performed by others.

7.3 Work associated with wheel path rut filling prior to installation shall be subsidiary.

7.4 Micro-milling of surface irregularities prior to installation shall be subsidiary.

7.5 If no pay item is provided for sweeping of surfaces, it shall be considered subsidiary.

7.6 Traffic Control will be paid for under Section 619

7.7 Line striping shall be installed paid for under Section 632 -- Reflectorized Pavement Markings or installed by others.

Pay Items and Units, Section 414 – Micro-Surface Surface Treatment:

414.21	Microsurface Treatment (Conventional)	SY
414.22	Microsurface Treatment (Fiber-Reinforced)	SY
414.23	Microsurface Treatment (Polymer Modified or HiMa 6% SBS)	SY

SECTION 415 – CHIP SEAL

Description

1.1 Work shall consist of chip sealing designated City streets with either conventional or asphalt rubber chip seals with either a single or double course of cover aggregate as specified.

Materials

2.1 Emulsified Liquid Asphalt. Acceptable grades shall be: CRS-2 or RS-2 conforming to AASHTO specifications M208 or M140 with a 2% latex additive. The liquid asphalt shall be compatible with the cover aggregate to be used.

2.1.1 Latex Additive latex additive shall be Butonal NX 1129 (Anionic) or Butonal NX 4190 (Cationic) or equivalent conforming to the following specifications. It is required that the latex be co-milled at the bulk emulsion facility, to ensure complete and balanced blending. The emulsion manufacturing plant must be open to inspection by the Department.

Table 415- 1 Latex Additive Specification

	Anionic	Cationic
Monomer Ratio (Butadiene/Styrene)	(76 ± 2 / 24 ± 2)	(76 ± 2 / 24 ± 2)
Solids, Min%	67	63
Solids, Min lbs/gal	5.2	4.8
Coagulum (80 mesh screen max)	0.1%	0.1%
pH of Latex	10.0 – 10.7	5.0 – 5.6
Brookfiled Visc (Model RVT, #3 sinple @20 RPM)	1000 - 2000	250 – 2000
Mechanical Stability	Excellent	Excellent

2.2 Asphalt Rubber Binder

2.2.1 The base asphalt binder shall have be PG 64-28. Department may allow substitutions where needed to meet the requirements of ASTM D 6114. The intended PG must be used in the mix design and for the Asphalt-Rubber blending.

2.2.2 The physical requirements for the Asphalt-Rubber binder shall conform to ASTM D 6114 type II specifications. The minimum percentage of ground rubber shall be 20% by weight of the total Asphalt-Rubber binder.The reclaimed vulcanized rubber shall be produced primarily from the processing of automobile and truck tires. The rubber shall be produced by the ambient temperature grinding processes only.

2.2.3 The specific gravity of reclaimed vulcanized ground rubber shall be not less than 1.10 and not greater than 1.20.

2.2.4 Rubber for use in Asphalt-Rubber binder shall be free of loose fabric, wire and other contaminants. Up to 4 percent (by weight of rubber) calcium carbonate or talc may be added to prevent caking or sticking of the particles together. The ground rubber shall be sufficiently dry so as to be free flowing and not produce foaming when blended with the hot PG binder.

2.3 Cover Aggregate. Aggregate used shall be crushed stone, free from dust, soft stone or other contaminants, with a minimum of 90% of the stones have a fractured face. Crushed gravel stone will not be permitted. All stone shall satisfy a 35 maximum for the L.A. Abrasion Test and a 30% maximum for the Flakiness Index Test. Aggregate shall meet the following gradation as tested by AASHTO T27.

Table 415- 2 Cover Stone Gradation

1/2 Inch Stone		3/8 Inch Stone	
Sieve Size	**% Passing**	**Sieve Size**	**% Passing**
5/8”	100	5/8”	100
1/2”	90-100	1/2”	100
3/8”	15-65	3/8”	85-100
#4	0-8	#4	0-30
#8	0-4	#8	0-6
#200	0-2	#200	0-2

2.3.1 Conventential double chip seals shall use 1/2 inch stone for first couse and 3/8 stone for second course. Unless otherwise specificed by the Engineer, single chip seals shall use 3/8 stone.

2.3.2 Asphalt rubber chip seals shall use a single course of 3/8 inch stone with the following modification to the gradation: #4 sieve 0- 8%, #8 sieve 0- 4%.

2.3.3 Pretreatment of Aggregate

2.3.3.1 Conventional Chip Seals. Pretreatment of the stone is required if the percentage passing of #200 sieve is greater than 1.0%. Proper pre-treatment shall be obtained by a twin shafted Pugmill with a Digital Readout Belt Scale. The stone shall be treated with a diluted slow setting emulsion at the rate of 1 – 2 gallons per ton to ensure uniform treatment of all aggregate.

2.3.3.2 Asphalt Rubber Chip Seals. Pretreatment of stone is required. The aggregate shall be pre-heated to a temperature between 200°F and 300°F, and be pre-coated with 0.4% to 0.8% (by weight of aggregate) of PG 64-28 or PG 64-22 asphalt binder prior to application.

Engineering Design

3.1 The Contractor shall submit to the Engineer a design of the chip seal to be used to meet existing field conditions. The information submitted shall include material specifications, any laboratory test of the material, aggregate gradation tests along with design specific information such as proposed application rates of the emulsified asphalt and cover aggregate material quantities to meet. Variations in material quantities will be made without adjustment to contract unit price. The Contractor must maintain a laboratory open to the inspection by the Engineer.

3.2 Once the materials are approved, no substitution will be permitted unless first tested and approved by the Engineer.

Equipment

4.1 General. The equipment used by the Contractor shall be maintained in satisfactory working condition at all times to ensure a high quality product.

4.2 Aggregate Spreader. The aggregate spreader shall be hydrostatically driven and self-propelled. It shall be equipped with a hydraulically controlled variable adjustable head that is capable of spreading stone in widths from 4.5 to 18 feet. The spreader shall be mounted on pneumatic tires and shall apply the treated stone on the road surface in a manner that ensures that the tires do not contact the road surface until after the stone has been applied. The unit shall be equipped with an electronic radar type sensor used to measure ground speed and will automatically adjust the stone application rate depending on width of application and the speed of chip spreader. It shall have the ability to apply stone on any grade from 0 - 6%. The spreader shall be equipped with an integral hopper with a minimum capacity of 5 tons, of treated stone which shall be filled by trucks in a manner which ensures that the truck tires never come in contact with asphalt-treated road surfaces until the stone has been properly applied. To maintain constant stone application, a self-locking truck hitch will permit towing of aggregate trucks without stopping the chip spreader. It will capable of maintaining positive engagement over irregular terrain.

4.3 Rollers. A minimum of two (2) pneumatic tire rollers shall be used on each treated surface immediately after the stone has been applied. Each roller shall have a compacting width of not less than 5 feet and a gross weight of not less than 8 tons.

4.4 Trucks. Rear discharge conveyor-fed trucks in sufficient number and size must be used to deliver aggregate to the spreader.

4.5 Conventionial Chip Seals.

4.5.1 Asphalt Distrubutor – The asphalt distributor shall contain suitable mechanical circulating and heating mechanisms to provide a uniform approved temperature of the entire mass of material. The distributor shall be equipped with a radar type sensor used to measure ground speed, and feed a Digital Volumetric Accumulator capable of measuring liters applied and distance traveled. It shall be capable of applying asphalt material in accurately measured quantities at any rate between 0.1 to 2.0 gallons per square yard, of roadway surface, at any

length of spray bar up to 16 feet. The distributor shall be capable of maintaining a uniform rate of distribution of asphalt material regardless of change in grade, width or direction of the road. It shall be equipped with an electronic control for setting asphalt pump discharge rate and on/off switching of spray for nozzles in one (1) foot, increments which shall be located in the truck cab. The spray nozzles and pressure system shall provide a sufficient and uniform fan-shaped spray of asphalt material throughout the entire length of the spray bar at all times while operating. The spray shall completely cover the roadway surface receiving the treatment.

4.6 Asphalt Rubber Chip Seals.

4.6.1 Mixing and Reaction Equipment. The method and equipment for combining the ground rubber and PG asphalt binder shall be so designed and accessible that the Engineer can readily determine the percentage of each material being incorporated into the mixture.Equipment utilized in the production and proportioning of Asphalt-Rubber binder shall include the following as a minimum:

- An asphalt heating tank or heat exchanger with hot oil heat transfer to heat the PG asphalt binder to the necessary temperature before blending with the ground rubber. This unit shall be equipped with a thermostatic heat control device.

- A mechanical blender shall be utilized for proper proportioning and thorough mixing of the PG asphalt binder and ground rubber. This unit shall have a Coriolis type mass flow meter capable of measuring and recording the total quantity of asphalt binder in tons. The quantity of ground rubber shall be determined by weight utilizing either a hopper equipped with load cells or a feeder equipped with a belt scale. The total weight in tons and percentage of ground rubber based on total asphalt rubber binder shall be recorded. All data shall be reported to the awarding authority as outlined in Section 4.4, Reporting

- A dedicated asphalt rubber reaction/storage tank equipped with a heating system to maintain the proper temperature of the binder and an internal mixing unit capable of maintaining a homogeneous mixture of asphalt and ground rubber.

4.6.2 Mixing. The temperature of the asphalt binder shall be between 325°F and 400°F at the time of addition of the ground rubber. Ensure that there are no agglomerations of rubber particles in excess of two inches in the least dimension in the mixing chamber. The Contractor shall document that the proportions are accurate and that the rubber has been uniformly incorporated into the mixture. Ensure that the crumb rubber and asphalt binder are thoroughly mixed. Rubber floating on the surface or agglomerations of rubber particles is evidence of insufficient mixing. Maintain the temperature of the asphalt-rubber binder immediately after mixing between 325°F and 375°F for a minimum of 45 minutes before use.

4.6.3 Testing and Certification. The materials shall be sampled once per lot at the point of manufacture, tested and certified by an AASHTO (formally AMRL) accredited laboratory approved for asphalt rubber binder testing. The laboratory shall certify that the material meets the requirements of ASTM D 6114 type II specifications. A lot shall be defined as each batch produced, but not to exceed the volume of the manufacturer's dedicated asphalt rubber

reaction/storage tank.In addition to the ASTM D 6114 Type II specification, to ensure adequate blending residence time and superior binder quality. Every lot shall be tested under AASHTO T315 Orginal Binder 2 mm DSR @82.

4.6.4 Reporting. Prior to starting the project, the contractor shall submit a Quality Control Plan from the Asphalt Rubber supplier meeting the requirements of AASHTO R-26 format.The contractor shall submit a weekly manufacturer's report for each lot of asphalt rubber produced that includes the following as a minimum:

- Total quantity of asphalt binder in tons.
- Tons and percentage of ground rubber based on total asphalt rubber binder.
- ASTM D 6114 certified test results.
- AASHTO T315 Original Binder 2mm DSR @ 82.

4.6.5 Asphalt Distrubutor. The distributor shall be equipped with an internal heating device capable of heating the material evenly up to 425°F. It shall contain the internal mixing unit capable of maintaining a proper mixture of asphalt cement and granulated rubber. Pumps shall be of adequate capacity to maintain a high rate of circulation in the tank and to spray the asphalt-rubber at a viscosity of 1,500 to 5,000 centipoise. Pressure devices and suitable manifolds shall provide constant positive cut-off to prevent dripping from the nozzles. Distributor shall be equipped with an electronically controlled computerized compensation unit for controlling application rates at various width and speed changes. The application unit shall have electronic controls and a digital read out installed and operated from the inside of the cab of the distributor. The distribution bar on the distributor shall be fully circulating. Any distributor that produces a streaked or irregular distribution of the material shall be promptly repaired or removed from the project.

4.6.6 Projects exceeding 35 tons of liquid asphalt rubber shall require at least two pressure-type bituminous distributor trucks in good condition.

4.6.7 Distributor equipment shall include a tachometer, pressure gauges, volume measuring devices, and a thermometer for reading temperature of tank contents. Controls for spray bar shall be located in cab of truck, for controlling width and rate of spray of product. It shall be so constructed that uniform applications may be made at the specified rate per square yard with a tolerance of plus or minus 0.05 gallon per square yard.

4.6.8 The distributor shall be equipped with a continuous mechanical means to ensure that all nozzles are clean at all times. If a continuous mechanical means is not present, then a "bootman" shall accompany the distributor and ride in a position so that all spray bar nozzles are in his full view and readily accessible for unplugging.

4.6.9 Tank trucks used to transport asphalt rubber mix shall be equipped with a heating system to maintain the proper temperature of the binder and an internal mixing/agitation unit capable of maintaining a homogeneous mixture of asphalt and ground tire rubber while in transit.

Construction Requirements

5.1 Surface Preparation

5.1.1 All surface preparations include any necessary patching and adjusting of drainage and utility structures shall be completed prior to the chip seal treatment.

5.1.2 All cracks and joints greater than 1/4 inch wide shall be cleaned and sealed by routing and providing a slightly concave shape with material approved by the Engineer. Cracks greater than 3/4 inch shall be crack sealed but not routed. Crack sealing shall be performed in conformance with Section 413 --Hot-Poured Crack Sealant and is incidental to this Section. No over banding will be permitted. The Crack Sealant shall provide not less than 5% polyester reinforcing fibers (PG + fibers), or a polymer and crumb rubber modified asphalt cement including not less than 3% polymers, 7% recycled tire crumb rubber (80 mesh), and 8% polyester fibers (PCRM + fibers).

5.1.3 All patch areas, ruts and other surface irregularities ½" or greater will be repaired by the Owner prior to placement.

5.1.4 Immediately prior to surface treatment, the roadways shall be thoroughly clean by use of a mechanical sweeper. The Contractor shall protect any manhole covers, drop inlets, catch basins, curbs, and any other structures that will be affected by the surface treatment application.

5.1.5 The surface shall have no free moisture present or ponding water.

5.2 Weather Limitations. The minimum ambient air temperature for application of the placement of the chip seal layers shall be 50°F. No freezing conditions are allowed in the first 24 hours. No work shall be done during rainy conditions.

5.3 Material Application

5.3.1 Application rates of the emulsified asphalt for conventional chip seals of the type specified shall be applied at the contractor's determined rate. Contractor shall ensure that the asphalt material is not applied more than 300 feet in advance of the aggregate spreader.

5.3.2 The asphalt-rubber binder for asphalt rubber chip seals shall be applied at a temperature of 325°F to 400°F at the contractor's determined rate. The application of aggregate shall follow as close as possible behind the application of the hot asphalt-rubber. Distance shall be only in advance of the aggregate spread than can be immediately covered before setting of the binder material. Construction equipment or other vehicles shall not drive on the uncovered asphalt-rubber.

5.3.3 Cover aggregate shall be spread from the aggregate spreader at the predetermined application rate.

5.3.4 Longitudinal joints shall be reasonably true to line and parallel to centerline. Where any construction joint occurs, the edges shall be broomed back and blended so there are no gaps and the elevations are the same, and free from ridges and depressions. Longitudinal joints shall be overlapped from 4 to 6 inches.

5.4 Rolling. Initial rolling shall be done immediately following the application of aggregate. A minimum of three (3) passes should be completed over the entire treated area. Rollers shall be operated at a speed not to exceed 5 mph.

5.5 Traffic Control. The roadway shall be kept open to traffic at all times, with traffic discontinued on the lane being treated. Controlled traffic may be permitted as soon as the final layer is applied and rolled.

5.6 Surplus Aggregate. Surplus aggregate shall be swept off of the road surfaces after the asphalt has properly cured. Care will be taken not to dislodge imbedded aggregate or damage the surface.

Method of Measurement

6.1 Chip Seal of the type specified shall be measured by the square yard of road treated. Measurements shall be to the nearest 0.1 of a square yard.

Basis of Payment

7.1 Accepted quantities of Chip Seal will be paid for at the contract unit price per square yard, complete in place.

7.2 Pavement patching, crack sealing, structure adjustment or structure repair (if required) prior installation will be paid for under the appropriate Sections or be performed by others.

7.3 Work associated with wheel path rut filling prior to installation shall be paid for under the appropriate items in Section 411 or be performed by others

7.4 If no pay item is provided for sweeping of surfaces, it shall be considered subsidiary.

7.5 Traffic Control will be paid for under Section 619

7.6 Line striping shall be installed and paid for under Section 632 -- Reflectorized Pavement Markings

7.7 Removal of pavement markings shall be paid under Item 632.4 or 632.5 as appropriate.

Pay Items and Units, Section 415 – Chip Seal:

415.11	Conventional Single Chip Seal	SY
415.12	Conventional Double Chip Seal	SY
415.21	Asphalt Rubber Single Chip Seal	SY

SECTION 416 – CAPE SEAL TREATMENT

Description

1.1 Cape Seal Treatment shall consist of preparing and applying a chip seal interlayer course (either conventional or asphalt rubber) followed with a thin asphalt overlay material (micro-surfacing) top course. Finished treatment provides a smooth roadway surface suitable for residential roadways.

Materials

2.1 Chip Seal Interlayer Course. All materials shall conform to Section 415 – Chip Seal

2.2 Microsurface Top Course. All materials shall conform to conventional microsurface treatment in Section 414 – Micro-Surface Surface Treatment.

Engineering Design

3.1 The Contractor shall submit to the Engineer design of the chip seal interlayer and microsurface to be used to meet existing field conditions. Variations in material quantities will be made without adjustment to contract unit price. The Contractor must maintain a laboratory open to the inspection by the Engineer. Submittals shall include following material:

3.1.1 Chip Seal Interlayer. Cover aggregate gradation and lab tests, specification and lab tests of liquid asphalt and any asphalt additives, proposed application rates of asphalt and cover aggregate.

3.1.2 Microsurface Top Course. Signed and certified mix design covering the specific material(s) to be used on the project. This design shall be performed by a qualified, independent laboratory.

3.2 Once the materials are approved, no substitution will be permitted unless approved by the Engineer.

Equipment

4.1 General. The equipment used by the Contractor shall be maintained in satisfactory working condition at all times to ensure a high quality product

4.2 Chip Seal Interlayer – Equipment shall be in conformance with that outlined in Section 415 – Chip Seal

4.3 Microsurface Top Course –Equipment shall be in conformance with that outlined in Section 414 – Micro-Surface Surface Treatment

Construction Requirements

5.1 Chip Seal Interlayer Application. Unless otherwise stated in this specification construction requirements shall follow those outlined in Section 415 – Chip Seal

5.2 Microsurface Application. Unless otherwise stated in this specification construction requirements shall follow those outlined in Section 414 – Micro-Surface Surface Treatment

5.3 Surface Preparation

5.3.1 All surface preparations include any necessary patching and adjusting of drainage and utility structures shall be completed prior to the chip seal treatment.

5.3.2 All cracks and joints greater than 1/4 inch wide shall be cleaned and sealed by routing and providing a slightly concave shape with material approved by the Engineer. Cracks greater than 3/4 inch shall be crack sealed but not routed. Crack sealing shall be performed in conformance with Section 413 – Hot-Poured Crack Sealant and is incidental to this Section. No over banding will be permitted. The Crack Sealant shall provide not less than 5% polyester reinforcing fibers (PG + fibers), or a polymer and crumb rubber modified asphalt cement including not less than 3% polymers, 7% recycled tire crumb rubber (80 mesh), and 8% polyester fibers (PCRM + fibers).

5.3.3 All utility patch areas, ruts and other surface irregularities ½" or greater shall be repaired by patching or shim course of asphalt prior to the chip seal interlayer placement.

5.3.4 Immediately prior to surface treatment, the roadways shall be thoroughly clean by use of a mechanical sweeper. The Contractor shall protect any manhole covers, drop inlets, catch basins, curbs, and any other structures that will be affected by the surface treatment application.

5.3.5 The surface shall have no free moisture present or ponding water.

5.4 Weather Limitations. The minimum ambient air temperature for application of the placement of the chip seal or microsurface layers shall be 50°F. No freezing conditions are allowed in the first 24 hours. No work shall be done during rainy or foggy period.

5.4.1 Microsurface top layer shall be applied over the chip seal interlayer course in the same season but no sooner than 7 days after the chip seal application.

Method of Measurement

6.1 Cape Seal Treatment placed shall be measured by the square yard of road surface treated. Measurements shall be to the nearest 0.1 of a square yard.

Basis of Payment

7.1 Accepted quantities of Cape Seal Treatment will be paid for at the contract unit price per square yard, complete in place including placement and clean up.

7.2 Pavement patching, crack sealing, structure adjustment or structure repair (if required) prior installation will be paid for under the appropriate sections or be performed by others.

7.3 Work associated with wheel path rut filling prior to installation will be paid for under the appropriate sections or be performed by others.

7.4 Sweeping of surfaces will be paid for under the appropriate sections or be performed by others.

7.5 Traffic Control will be paid for under Section 619

7.6 Line striping shall be installed and paid for under Section 632 – Reflectorized Pavement Markings

Pay Items and Units, Section 416 – Cape Seal Treatment:

416.21	Conventional Cape Seal Treatment	SY
416.22	Asphalt Rubber Cape Seal Treatment	SY

SECTION 417 -- COLD PLANING OF ASPHALT SURFACES

Description

1.1 This work consists of removal of hot mix asphalt (HMA), cold mix and/or surface treatment pavement by cold milling (pavement milling and micro milling). The work will include hauling of cuttings; cleaning of asphaltic concrete pavement and concrete pavements in preparation for an overlay conforming with these specifications, and to the lines, grades, and cross sections shown on the plans or drawings or as established by the Engineer. This work includes milling of intersecting streets and/or driveways to the limits shown on the plans or drawings or as ordered by the Engineer.

Equipment

2.1 Milling Machine

2.1.1 The equipment shall be maintained in a satisfactory working condition so as not to cause delays, and the machine must be equipped with taillights, headlights, and necessary reflectors so that it can be operated in traffic with complete safety.

2.1.2 Milling machines shall have a means of loading by a conveyor belt, and it shall have the ability to cold mill concrete patches when encountered in the pavement.

2.1.3 Track-mounted cold milling equipment will be required for primary operations on HMA surfaces in which the Contractor anticipates pavement milling down to within three quarters (3/4) of an inch of an unbound base course. Either track or conventional wheeled milling machines will be acceptable on work requiring only partial-depth milling of the bound materials such that sufficient pavement materials exist after removal to support the cold milling operation. Wheeled machines of sufficient size will be permitted for trimming operations.

2.1.4 Grade Control. The automatic controls on the milling machine shall provide accurately established profile grades at each edge of the machine by referencing from the existing pavement or an independent grade reference, where required, or be capable of automatically maintaining a designated cross slope from a single reference.

2.1.4.1 The milling machine shall be equipped with a built-in automatic grade control system that can control the longitudinal profile and the transverse cross-slope to produce the specified results. The longitudinal controls shall be capable of operating from any longitudinal grade reference, including string line, ski (30 foot minimum), mobile string line (30 foot minimum), or matching shoe. The transverse controls shall have an automatic system for controlling cross-slope at a given rate.

2.1.4.2 The rotary drum of the milling machine shall utilize carbide tip tools spaced not more than 5/8 of an inch apart.

2.1.4.3 The milling machine shall be self-propelled and shall have sufficient power, traction, and stability to maintain an accurate depth of cut.

2.2 Micro Milling Machine.

2.2.1 Micro milling equipment shall conform to all requirements provided in Section 417.2.1 except as revised herein.

2.2.2 The rotary drum of the milling machine shall utilize carbide tip tools spaced not more than 3/16 of an inch apart.

2.3 Sweeper

2.3.1 The textured surface shall be left clean and dust free by the use of self-propelled power sweepers with spray bar, vacuums, hand sweepers, or other methods approved by the Engineer. All equipment shall be equipped with or provide a means of effectively limiting the amount of dust escaping during the milling and removal operation.

Construction Requirements

3.1 The Contractor shall visit the site of the proposed work and fully acquaint themselves with the existing conditions relating to construction, labor, and traffic. The Contractor shall be fully informed as to the infrastruture involved and the difficulties and restrictions regarding the performance of the Contract.

3.2 The existing bituminous surface shall be removed by planing or milling machine capable of removing in one or more passes, bituminous material to the depth specified. The equipment shall be capable of accurately establishing profile grades by an automatic grade control system referencing from either the existing pavement or from an established independent grade line.

3.2.1 Variable milling depths may be required to improve drainage and cross slope.

3.2.2 The cutting tools on the revolving cutting drum must be continually maintained and shall be replaced as warranted to provide a uniform pavement texture.

3.2.3 The Contractor shall be responsible for the maintenance of the milled roadway. Exposed granular material shall be compacted to proper lines and grades. The exposed granular material shall be patched with hot mix asphalt (HMA) in accordance with procedures outlined in Section 404 --Pavement Restoration prior to paving. Included in this item will be all labor, equipment, materials and maintenance necessary to provide a satisfactory surface for paving.

3.2.4 Where a surface delamination between HMA layers or a surface delamination of HMA on Portland cement concrete causes a non-uniform texture to occur, the depth of milling shall be adjusted ±1/2 inch or at the contract unit price per additional inch under the direction of the Engineer.

3.2.5 Care shall be utilized by the Contractor to insure that the milling operation does not disturb or damage pavement areas to remain. If milling operations begin to displace or

damage pavement to remain, then the Contractor shall cease milling operations and make adjustments as required and as approved by the Engineer. Any damage caused by the milling operations shall be repaired at the Contractor's expense and as directed by the Engineer.

3.2.6 Asphalt concrete that cannot be removed by milling equipment shall be removed by other methods acceptable to the Engineer.

3.3 Control Strip. A control strip may be required by the City which shall be a maximum length of 500 feet and shall meet the criteria for surface tolerance and cross slope as noted in this specification.

3.4 Transition Milling. Where the milling area terminates and abuts the existing adjacent pavement, a neat straight line shall be cut with suitable power-driven trimmer. It is the intention of this operation and the obligation of the Contractor to produce a uniform straight line at all pavement joints. The resulting joint shall be filled with cold patch material and maintained by the Contractor as necessary to provide a safe transition from the milled surface to the adjacent pavement for the traveling public at all times.

3.5 Patching. The City may elect to perform pavement milling in areas requiring patching along utility trenches or in areas of pavement deterioration. Milling equipment utilized for these locations shall be of appropriate size. The Contractor shall utilize 40, 48, or 60 inch cutters when requested by the Engineer.

3.6 Structures. Care shall be utilized by the Contractor to insure that no damage occurs to curbing, median barriers, bridge scuppers, parapets, manholes, utility valve boxes, loop detectors, traffic counters, and/or similar structures installed in or adjacent to the street. The Contractor shall, at no additional cost to the City, repair or replace any damaged items not within the scope of work.

3.6.1 Structures within the limits of pavement milling shall be broken down and plated prior to milling operations unless otherwise approved by the Engineer. Excavations for plate installation shall be backfilled and paved with a minimum of 2 inches of hot mix asphalt or cold patch. Use of millings alone for backfill is unacceptable. Drainage and utility structures shall be set and raised in accordance with the provision of Sections 602.3.11and 604.3.11.

3.6.2 All drainage structures along the roadway, including the first two structures on the downhill side of all side streets and private driveways/roadways shall be protected prior to milling operations using silt sacks or other approved methods.

3.7 Underlying Concrete Pavement. If concrete pavement base is present within the construction limits, the Contractor shall inform the Engineer of the location. Milling of the various asphaltic pavement overlays on the concrete base shall be performed where directed in a manner that does not damage the concrete base. This work shall be included in the various milling items and no additional payment or compensation shall be made for work necessary due to the concrete pavement base.

3.8 Joints. All butt joints created by the milling operation at driveways which are greater than 2 inches in depth shall be filled with millings or cold patch material and maintained by the Contractor to allow a safe egress and ingress for the traveling public at all times. All butt joints created by the milling operation at intersecting streets which are greater than 1-1/2 inches in depth shall be filled with hot mix asphalt material and maintained by the Contractor to allow a safe egress and ingress for the traveling public at all times.

3.9 Safety. The Contractor will provide all necessary labor, materials, and equipment for protection of motorists and pedestrians from any protruding structures that may result from the milling operation. The Contractor shall also be responsible for the protection of motorists and pedestrians from any irregularities and pavement drop-offs that may result from the milling operation.

3.9.1 In the event of rain or inclement weather, the Contractor shall suspend milling operations. The Contractor shall make necessary allowances such as for drainage of water that may pond in areas where the milling was completed and the paving has not been completed. Those areas that are to be opened to traffic shall have drainage outlets cut through the shoulder at locations designated by the Engineer. The Contractor shall plan and prosecute the milling operation to avoid the trapping of water on the roadway. Drainage outlets shall be restored to original grade, unless otherwise directed by the Engineer. Cost for cutting and restoring the drainage slots in the roadway shoulder shall be included in the price bid for other items of work.

3.9.2 The Contractor shall provide a means to effectively limit the amount of airborne dust created during trafficking. The use of self-propelled sweepers may be necessary during the time in which the street is left in a milled state.

3.9.3 The milling operation shall not proceed until the Contractor is prepared to overlay the milled section with its intended wearing or surface course. A roadway may be left in a milled condition for no more than ten (10) calendar days, unless otherwise approved by the Engineer. The Engineer may further restrict the time limits when surface, weather, or safety conditions warrant.

3.10 Sweeping. The Contractor shall sweep and remove loose cuttings, dust or other objectionable material from the roadway at the end of each working day using power brooms, power vacuums or both; and ancillary equipment, tools and labor necessary to properly prepare the road for subsequent tack coat and paving.

3.11 Patching. During the cold-milling operation, any localized areas of exposed base materials will be repaired by the Contractor at no additional cost to the City. The area of base exposure shall be repaired by placing a minimum of 1 inch of compacted HMA, or as otherwise directed by the Engineer. Any patching required shall be repaired before the end of the working day, and in a manner satisfactory to the Engineer.

3.12 Pollution Control. All equipment will be operated such that it will effectively control dust generated by cutting, loading, and/or cleaning operations. To prevent the infiltration of milled materials into any storm water system the Contractor shall take special care to prevent the milled

material from falling through structures. Any material that has fallen through the structures shall be removed at the Contractor's expense.

3.13 Recycled Material. Material removed during this operation, shall be transported and stockpiled for use as directed.

3.13.1 Vehicles used to transport milled material intended for use as recycled material will be free from any foreign matter such as dirt, debris, leaves, or solvents.

3.13.2 All salvaged recycled material shall become the property of the City and shall be transported to a location within the City limits at no additional cost to the City unless otherwise directed by the Engineer.

3.14 Night Work. When performing night operations, the Contractor shall provide sufficient lighting at the work site to ensure the same degree of accuracy in workmanship and conditions regarding safety as would be obtained in daylight.

3.15 Finished Appearance.

3.15.1 Grade.

3.15.1.1 Pavement Milling. Any deviations in the profile or cross-slope that exceed 3/8 inch under a 10-foot string line or straightedge placed parallel or transversely to the centerline will be corrected to the satisfaction of the Engineer.

3.15.1.2 Pavement Micro Milling. Any deviations in the profile or cross-slope **that** exceed 1/8 inch under a 10-foot string line or straightedge placed parallel or transversely to the centerline will be corrected to the satisfaction of the Engineer.

3.15.2 Surface Texture. The milled surface shall provide a riding surface with a uniform textured appearance. The milled surface shall be free from gouges, longitudinal grooves and ridges, oil film, and other imperfections that are a result of defective equipment, improper use of equipment, or poor workmanship. Any unsatisfactory surfaces produced are the responsibility of the Contractor and shall be corrected at the Contractor's expense and to the satisfaction of the Engineer.

3.15.2.1 Pavement Milling. The variation of the top of two ridges from the testing edge of the straightedge, between any two ridge contact points, shall not exceed $^{3}/_{8}$ inch. The variation of the top of any ridge to the bottom of the groove adjacent to that ridge shall not exceed $^{3}/_{8}$ inch.

3.15.2.2 Pavement Micro Milling. The final pavement surface shall have a maximum transverse pattern of 3/16 inch center to center of each strike area. The difference between the ridge and valley of the milled surface shall not exceed 1/16 inch.

3.15.3 Depth. The depth of removal will be verified by taking a measurement every 250 feet per each pass of the milling machine, or as directed by the Engineer. These depth measurements shall be used to monitor the average depth of removal.

3.15.4 Corrections. The Engineer may require re-milling of any area where a non-uniform surface has resulted from the Contractor's operations; these areas will be corrected at no additional expense to the City. All corrections will be made with approved methods and materials. Any areas that require corrective measures will be subject to the same acceptance tolerances. Excess material that becomes bonded to the milled surface will be removed to the Engineers satisfaction before the area is accepted.

Method of Measurement

4.1 Pavement milling of bituminous surfaces as shown on the plans or ordered by the Engineer will be measured by the square yard as determined by the actual surface measurements of the lengths and widths of the bituminous areas removed.

4.1.1 The nominal depth of material removed will be as shown on the plans or directed by the Engineer.

Basis of Payment

5.1 The accepted quantities of pavement milling to the nominal depth specified will be paid for at the Contract Unit Price per square yard.

5.1.1 Milled depths within -0.4 to +0.5 inches of the nominal depth shall be paid under that Item.

5.2 No separate payment will be made for any cost of project lighting or overtime necessary due to night operations.

Pay Items and Units, Section 417 -- Cold Planing Of Asphalt Surfaces:

417.01	Cold Planing of Bituminous Surfaces (1” deep)	Square Yard
417.02	Cold Planing of Bituminous Surfaces (2” deep)	Square Yard
417.03	Cold Planing of Bituminous Surfaces (3” deep)	Square Yard
417.1	Micro Milling of Bituminous Surfaces	Square Yard
417.19	Cold Planing of Bituminous Surfaces (Night)	Square Yard
417.191	Micro Milling of Bituminous Surfaces (Night)	Square Yard

SECTION 418 – BONDED WEARING COURSE SURFACE TREATMENT

Description

1.1 This work shall consist of installation of a Bonded Wearing Course (BWC) surface treatment consisting of a warm asphalt emulsion bond coat sprayed on the surface followed immediately with an ultra-thin hot mix asphalt wearing course.

Materials

2.1 Mixture Requirements. The Contractor shall formulate and submit to the Engineer, a Job Mix Formula (JMF) that satisfies the design general limits listed in Table 418- 1. The production tolerances customarily used by the City for HMA shall apply, but shall not fall outside the Master Range following gradation requirements.

It is intent to utilize <u>Type B mixes</u> unless directed in writing by the Engineer.

Table 418- 1 Master Range and Production Tolerance

Sieve Size	Master Range Type B (3/8")	Master Range Type C (1/2")	Production Tolerance
3/4" (19 mm)	-	100	± 0.0
1/2" (12.5 mm)	100	85 – 100	± 0.0 / ± 7.0
3/8" (9.5 mm)	85 – 100	45 – 85	± 7.0 / ± 7.0
#4 (4.75 mm)	24 – 41	24 – 41	± 7.0
#8 (2.36 mm)	21 – 33	21 – 33	± 4.0
#16 (1.18 mm)	15 – 26	15 – 26	± 4.0
#30 (0.60 mm)	11 – 20	11 – 20	± 4.0
#50 (0.30 mm)	8 -16	8 -16	± 4.0
#100 (0.15 mm)	5 – 10	5 – 10	± 4.0
#200 (0.075 mm)	4 – 7	4 – 7	± 2.0
% PGAB	4.8 – 5.3	4.8 – 5.3	± 0.4

*Note: All aggregate percentages are based on the total weight of the aggregate.

2.2 Asphalt Binder. Bituminous materials shall meet the requirements of AASHTO M 320. Producers and suppliers of asphalt binders shall comply with the requirement of AASHTO R 26. Asphalt binder suppliers shall have a quality control plan that complies with AASHTO R 26.

The grade to be used shall conform to the material type ordered as defined below:

a. **Conventional Bonded Wearing Course (BWC)** shall meet standard PG 64-28 grading requirements.

b. **The Polymer Modified Bonded Wearing Course (BWC-P)** shall meet PG 64V-28 or PG 70-28 grading requirements.

- The polymer additive shall consist of unvulcanized SBR (styrene-butadiene-rubber) in liquid latex form, with a minimum quantity of rubber solids of 3% by weight of the performance grade asphalt binder (PGAB) content of the mix. The PG 64-28 shall be modified to produce a PGAB grade of 70-28 (+/- 2°).

- Quantity: 3% rubber solids by weight of the bitumen content of the mix. If the latex polymer is 70% solids, weight per gallon is 7.69 lbs. = 5.38 lbs. solids per gallon. If mix calls for 6% bitumen, 3% - 3.6 lbs. of latex solids per ton mix or 0.70 gallons of latex per ton of mix. The latex polymer modified asphalt binder shall be injected into the mix at the time of manufacture. In a drum plant, the liquid latex polymer shall be pumped into the asphalt binder through a spud welded to the asphalt binder line just prior to where it enters the drum. The constant rate at which the latex polymer is pumped shall be determined by the mix speed of the drum. In a batch plant, the polymer is pumped directly into the mix five (5) seconds after the asphalt binder starts to dump into the pug mill. Mix time per batch after polymer is pumped in is 45 to 60 seconds.

- The plant shall be equipped with an in-line blender and a sample cock for Quality Control and Acceptance purposes.

- A metering system shall be attached to a printer which prints a time and date stamp, latex flow rate and cumulative polymer usage during the HMA production, allowing the Engineer to reference the injection rate and latex used against the plant's projection rate. The printout shall be set for a five minute interval. The latex polymer manufacturer will have a professional representative available at the HMA plant during the first day of mix production and placement, and as required thereafter by the Engineer.

- The manufacturer of the SBR latex shall provide certified test results for Styrene Butadiene ratio, total rubber solids percentage by weight, pH, ash content, and viscosity to the Engineer prior to mix production.

- Mix conforming to the requirements of these specifications shall be placed when the ambient temperature is 50°F and rising when measured in the shade away from artificial heat.

- Mixing temperature shall be 290°F to 325°F unless otherwise specified by the Engineer. Mix shall be placed at between 275°F and 310°F or per manufacturer recommendations.

c. **The Asphalt Rubber Bonded Wearing Course (BWC-AR)** shall utilize an Asphalt-Rubber binder which conforms to ASTM D 6114 type II specifications. A post-blended SBR (styrene-butadiene-rubber) may be used as discussed herein.

- Base Asphalt Binder shall have a PG (Performance Grade) of PG64-28 and meet the requirements of ASTM D 6114 (type II). PG58-28 may be used as required at the discretion of the Engineer.

- Asphalt-Rubber Binder: The minimum percentage of ground rubber shall be 15% by weight of the total Asphalt-Rubber binder.

    i. The reclaimed vulcanized rubber shall be produced primarily from the processing of automobile and truck tires. The rubber shall be produced by the ambient temperature grinding processes only.

    ii. The specific gravity of reclaimed vulcanized ground rubber shall be not less than 1.10 and not greater than 1.20.

    iii. Rubber for use in Asphalt-Rubber binder shall be free of loose fabric, wire and other contaminants. Up to 4 percent (by weight of rubber) calcium carbonate or talc may be added to prevent caking or sticking of the particles together. The ground rubber shall be sufficiently dry so as to be free flowing and not produce foaming when blended with the hot PG binder.

- Mixing and Reaction Equipment: The method and equipment for combining the ground rubber and PG asphalt binder shall be so designed and accessible that the Engineer can readily determine the percentage of each material being incorporated into the mixture.

- Equipment utilized in the production and proportioning of Asphalt-Rubber binder shall include the following as a minimum:

    i. An asphalt heating tank or heat exchanger with hot oil heat transfer to heat the PG asphalt binder to the necessary temperature before blending with the ground rubber. This unit shall be equipped with a thermostatic heat control device.

    ii. A mechanical blender shall be utilized for proper proportioning and thorough mixing of the PG asphalt binder and ground rubber. This unit shall have a Coriolis type mass flow meter capable of measuring and recording the flow rate and total quantity of asphalt binder in both gallons and weight. The quantity of ground rubber shall be determined by weight utilizing either a hopper equipped with load cells or a feeder equipped with a belt scale. The percentage of ground rubber based on total asphalt rubber binder shall be recorded.

    iii. An asphalt rubber storage tank equipped with a heating system to maintain the proper temperature of the binder and an internal mixing unit capable of maintaining a homogeneous mixture of asphalt and ground rubber.

- Mixing: The temperature of the asphalt binder shall be between 325°F and 400°F at the time of addition of the ground rubber or per manufacturer recommendations. Ensure that there are no agglomerations of rubber particles in excess of two inches in the least dimension in the mixing chamber.

- The Contractor shall document that the proportions are accurate and that the rubber has been uniformly incorporated into the mixture. Ensure that the crumb rubber and asphalt binder are thoroughly mixed. Rubber floating on the surface or agglomerations of rubber particles is evidence of insufficient mixing. Maintain the temperature of the asphalt-rubber binder immediately after mixing between 325°F and 375°F for a minimum of 45 minutes before use or per manufacturer recommendations.

- Testing and Certification:The materials shall be tested and certified by an AMRL accredited laboratory meeting the requirements of ASTM D 6114 type II specifications.

- The Contractor shall submit with the bid a Quality Control Plan from the Asphalt Rubber supplier meeting the requirements of AASHTO R-26 format.

2.3 Coarse Aggregate

2.3.1 Aggregates shall be of uniform quality durable pebbles or fragments of rock, with or without sand or other inert finely divided mineral aggregate. All material shall be free from clay balls, organic matter, deleterious substances, and an excess of flat or elongated pieces as specified in ASTM D 4791.

2.3.2 In order to obtain uniformity in the appearance of the pavement throughout the project, the aggregate for all surface treatment shall be obtained from the same material source. Sufficient material shall be on hand prior to starting daily operations to insure uninterrupted processing for the working day.

2.3.3 Coarse aggregate shall be crushed stone and a single size shall be nominal 3/8” (9.5 mm) or 1/2” (12.5 mm) meeting the requirements listed in the Table 418- 2 Coarse Aggregate Properties.

Table 418- 2 Coarse Aggregate Properties

Property	Test Method	Value
LA Abrasion Value, % loss	AASHTO T96-94	30 max
Soundness, % loss Magnesium Sulfate or Sodium Sulfate	AASHTO T104-94	18 max 12 max
Flat and Elongated Ratio, % @ 5:1	ASTM D-4791	10 max
% Crushed, single face	ASTM D-5821	95 min
% Crushed, two or more crushed faces	ASTM D-5821	85 min
Cleanliness (% passing 0.60 mm, (#30))	ASTM D-142	2 max
Resistance to stripping*	ASTM D-3625	85 min

*Anti-Stripping agents may be required to provide resistance to stripping, typically 1%.

2.4 Fine Aggregate. The fine aggregate shall be 100% crushed and have a minimum sand equivalent of 50, (AASHTO T 176-86). Fine aggregate shall be free from clay balls and deleterious amounts of organic matter. Stone screening shall be produced from stone at least equal in quality to that specified for coarse aggregate.

2.5 Recycled Materials. Recycled Asphalt Pavement (RAP) or other recycled products shall not be used as aggregate unless approved by the Engineer.

2.6 Mineral Filler. Mineral filler shall conform to AASHTO M 17 Section 2. Hydrated lime, fly ash, bag house fines and cement are acceptable as mineral filler.

2.7 Bond Coat. Grade CRS-1P polymer modified asphalt emulsion meeting the requirements of AASHTO T208 except as modified in Table 418- 3. If latex is used, it is required that it be co-milled at the bulk emulsion facility, to ensure complete and balanced blending.

Table 418- 3 Bond Coat Properties

Property	Test Method	Min	Max
Elastic Recovery, 25°C	AASHTO T301	65	
Residue by Distillation, %	AASHTO T59	63	
Penetration of Residue, 25°C, 100g, 5 sec	AASHTO T49	60	150

Equipment

3.1 Equipment used by the Contractor shall include, but not be limited to the following:

3.1.1 Paver. The self-priming paver must be capable of spraying the bond coat, applying the hot asphalt overlay and smoothing the surface of the mat in one pass, without equipment driving on or disrupting the bond coat, at a rate of 30-100 feet per minute. The self-priming paver must incorporate a receiving hopper, feed conveyor, insulated storage tank for emulsion, metered tack coat spray bar and a variable width, heated, ironing type screed. The screed must have the ability to be crowned at the center both positively and negatively and have vertically adjustable extensions to accommodate the desired pavement profile.

3.1.2 Roller. Steel wheeled double drum rollers weighing at least ten (10) tons that are equipped with functioning water systems and scrapers to prevent the fresh mix from adhering to the roller drums.

3.1.3 Milling. Micro milling machine to remove raised pavement markings and provide transitions at intersecting streets, driveways, and at gutter line catch basins.

3.1.4 Sweeper. A regenerative air sweeper equipped with an equipped with metal or nylon rotary broom.

Construction Methods

4.1 Pre-paving Meeting and Control Strip.

4.1.1 The Contractor and all subcontractors shall be available for a pre-paving meeting a minimum of seven days prior to construction activities to discuss the plan. At the meeting, the Contractor shall provide a Job Mix Formula (JMF) of the intended mixes, submittals of the intended crack seal and bonding agent, along with a Quality Control Plan (QCP). The submittals shall be approved by the Engineer prior to construction activities. The QCP shall provide information including but not limited to the following: Materials; Production Facility; Placement Equipment; Production and Field Personnel; Installation Plan; Quality Control Activities; and Traffic Control.

4.1.2 A Control strip will be required to ensure that the Engineer is satisfied with the installation quality including material properties and surface texture. The Control Strip may be a full day's production or a minimum of 1000 feet and must include a minimum of one (1) longitudinal joint. The material shall be installed in a similar location, with similar personnel, and similar equipment. If the materials, labor, or equipment change a new control strip will be required. A Control strip will be required for each BWC material size and binder type placed.

4.2 Surface Preparation

4.2.1 All surface preparations shall be completed by the Contractor prior to applying the wearing course. Manhole covers, water boxes, catch basins and other such utility structures shall be covered with plastic or building felt. Reference each for location and adjustment after paving.

4.2.2 Transitions at intersections, driveways and gutter line catch basins shall be transition milled to provide a smooth transition from the BWC to existing adjacent pavements. Along curbing where there are no catch basins (i.e. median islands) no transition milling will be required. All rutting observed along the project, primarily at signalized intersections which have rutting over 1/2" (measured crest to trough) in depth will be micro milled prior to BWC installation.

4.2.3 Micro mill or remove all raised (thermoplastic) traffic markings. Temporary Markings shall be installed according to Section 632 and shall be removed by the Contractor immediately prior to BWC installation.

4.2.4 Clean all cracks and joints greater than 1/4 inch wide by routing and providing a slightly concave shape with material approved by the Engineer. Cracks greater than 3/4 inch shall be crack sealed but not routed. Crack sealing shall be performed in conformance with Section 413 --Hot-Poured Crack Sealant. No over banding will be permitted. The Crack Sealant shall provide not less than 5% polyester reinforcing fibers (PG + fibers), or a polymer and crumb rubber modified asphalt cement including not less than 3% polymers, 7% recycled tire crumb rubber (80 mesh), and 8% polyester fibers (PCRM + fibers).

4.2.5 Damaged traffic signal loops shall be installed prior to the BWC installation.

4.2.6 All surface irregularities greater than 1" deep shall be filled with material approved by the Engineer. Rutting over 1/2" (measured crest to trough) in depth may be removed by micro milling the area.

4.2.7 A regenerative air sweeper shall be utilized to thoroughly clean the entire area to be overlaid and provide both water blasting and vacuum capabilities. This should be done after the joints have been sealed.

4.2.8 The surface at time of BWC installation shall have no free moisture present or ponding water.

4.3 Weather Limitations. The minimum pavement surface temperature for application of the bond coat and placement of the wearing course is 50°F in the shade, although it is recommended that the surface temperature be above 60°F. No freezing conditions are allowed in the first 24 hours, as the emulsion-based tack coat requires about one day to fully cure. Additionally, if the water in the emulsion freezes, it may rupture the bond between the pavement and the new mix.

4.4 Bond Coat Application

4.4.1 Apply the bond coat at a temperature of 120° - 170° F or at manufacturer recommendations. Provide a uniform application across the entire width to be overlaid, at a rate of 0.15 - 0.25 gallons per square yard. The rate of spray shall be continuously monitored. The applicator truck shall be capable of providing digital outputs and a control strip shall be performed during the first day to ensure that the readout is accurate. The spray bar shall be calibrated and able to be adjusted to within ± 10% of the design application rate. Coverage of the pavement must be even and uniform and, as such, it is important that there are no plugged nozzles on the spray bar. If the screed extension is outside the spray bar width, the tack coat will need to be applied manually to coat the pavement between the end of the spray bar and the end of the screed. Care should be taken to ensure the correct application rate in such circumstances.

4.4.2 No equipment shall come in contact with the bond coat before the hot mix asphalt concrete wearing course is applied.

4.4.3 Immediately after applying the bond coat, the hot mix asphalt overlay shall be applied across the full width of the bond coat at a temperature of 285° - 325°F or per manufacturer recommendations.

4.5 Paving

4.5.1 Good paving practice should always be followed when constructing a BWC. A BWC may be placed in lifts from 1/2 to 1-1/2 inches thick when using a 3/8 in (9.5 mm) mix. Thicker lifts are allowed when using a 1/2 in (12.5 mm) mix. The spread rate associated with using a 3/8 inch mix is from 7 to 9.5 lb/ft^2 and 9 to 11 lb/ft^2 when applying a 1/2 inch mix. The minimum delivery temperature for a BWC is 275°F with an upper temperature limit of 350°F or per manufacturer recommendations.

4.5.2 Longitudinal joints shall be straight or correctly aligned to the curvature of the roadway, and shall occur only at the edge or center of a traffic lane and never in the wheel paths. At the start and finish of the work as well as at intersecting paved sections, the existing flexible pavement should be cut out to a depth of 1 inch and tapered back a distance of 7.5 feet to provide a key for the new surfacing. At the end of the day, the BWC shall be squared off at the point where feathering commences, and the feathered material should be milled out before the next run is started.

4.6 Compacting

4.6.1 Compaction shall be begin immediately after the application of wearing course with two (2) passes of the roller to ensure proper seating of aggregates and to provide a smooth surface. Roller(s) will not be allowed to stop on the freshly placed wearing course. An adequate number of rollers shall be supplied to complete compaction before the internal pavement temperature falls below 185°F. There are no in place density requirements when rolling BWC mixes.

4.6.2 If necessary, more than two (2) coverages may be ordered by the Engineer when rolling BWC patches or joints.

4.7 Opening to Traffic. Protect the wearing course from traffic until the rolling operation is complete and the material has cooled sufficiently to resist damage, typically 155°F. Typically, no post sweeping is required unless the mix begins to ravel.

Method of Measurement

5.1 Bonded Wear Course (BWC) placed shall be measured by the square yard to the nearest 0.1 of a square yard.

Basis of Payment

6.1 Accepted quantities of Bonded Wear Course (BWC) will be paid for at the contract unit price per square yard, complete in place including milling, sweeping, placement and clean up.

6.2 Pavement patching, structure adjustment or structure repair prior to the BWC installation will be paid for under the appropriate sections or be performed by others.

6.3 Cracksealing will be paid for under Section 413 --Hot-Poured Crack Sealant or be performed by others.

6.4 Milling of bituminous surfaces at transitions, intersections, driveways, gutter line catch basins, and rut locations for the installation of the BWC shall be paid under Section 417 -- Cold Planing Of Asphalt Surfaces.

6.5 If no pay item is provided for sweeping of surfaces, it shall be considered subsidiary.

6.6 Traffic Control will be paid for under Section 619

6.7 Traffic signal loops replaced within the work area shall be paid for under Item 616.6-Inductive Loop Detectors.

6.7.1 Traffic signal loops damaged by the Contractor's negligence or carelessness shall be replaced at no additional cost the City.

6.8 Line striping shall be removal and installation shall be paid for under appropriate sitems of Section 632 -- Reflectorized Pavement Markings.

6.8.1 Temporary pavement markings installed under 4.2.3 shall be subsidiary.

Pay Items and Units, Section 418 – Bonded Wearing Course Surface Treatment:

418.10	Conventional Bonded Wearing Course (BWC)	SY
418.20	Polymer Modified Bonded Wearing Course (BWC-P)	SY
418.30	Asphalt Rubber Bonded Wearing Course (BWC-AR)	SY

DIVISION 500 – STRUCTURES

SECTION 508– STRUCTURAL FILL

Description

1.1 This work shall consist of the formation of embankments which are intended to support structures.

Materials

2.1 Structural fill shall consist of crushed gravel unless bank-run gravel, clean stone fill, or other material is specified on the plans or permitted by the Engineer. When not otherwise limited the word gravel as used below will refer to both bank-run gravel and crushed gravel.

2.1.1 Crushed Gravel for Structural Fill.

Table 508- 1 Required Grading – Crushed Gravel

Sieve Size	Percentage by Weight Passing
3 in	100
2 in	95 -100
1 in.	55 -85
No. 4	27 -52
No. 200	0 -12
(Based on the fraction passing the No. 4 sieve)	

2.1.1.1 At least 50 percent by weight of the materials retained on the 1 in. sieve shall have a fractured face.

2.1.2 Bank-run Gravel for Structural Fill. Bank-run gravel shall be graded as follows: 25 to 70 percent shall pass a No. 4 sieve. Not more than 15 percent of the portion which passes the No. 4 sieve shall pass a No. 200 sieve. No stone shall be included which cannot be incorporated in a 6 in. -course.

2.1.3 Clean Stone Fill for Structural Fill.

Table 508- 2 Required Grading – Clean Stone

:

Sieve Size	Percentage by Weight Passing
2 in	100
1-1/2 in	95 -100
3/4 in.	35-70
3/8 in.	10-30
No. 4	0-5

2.1.3.1 At least 50 percent by weight of the materials retained on the 3/4 in. sieve shall have a fractured face.

2.1.4 Wear. The percent of wear of gravel or clean stone fill shall not exceed 50 percent as determined in accordance with AASHTO T 96.

2.2 Concrete class F, flowable fill may be requested in writing as a substitute for structural fill. Approval in the form of a supplementary agreement shall be in consideration of, but not limited to, differential frost heaving due to dissimilar materials, unit weight, structural requirements, lack of permeability, and damming resulting from water flow cut off.

Construction Requirements

3.1 The area upon which the fill is to be constructed, regardless of the height of the proposed fill, shall be stripped of all loam, refuse, roots, stumps, boulders, and the like and shall be backfilled with the same type of material as that found at the site. All excavation shown on the plans or ordered shall be completed before constructing the fill. When fills are to be made on hillsides or when fill is built one half width at a time, the slopes of the original hillside or new fill shall be cut into or terraced as the work is brought up in layers.

3.1.1 Before the first layer of structural fill is placed, the entire work area of the original ground shall be compacted with approved compacting equipment.

3.2 Structural fill to be placed adjacent to new embankment material shall be placed concurrently with the embankment material to obtain lateral support.

3.3 The fill shall be placed in horizontal layers of uniform thickness not exceeding 8 in. loose depth and compacted to the required density prior to placing the next layer. Each layer shall be compacted with power rollers, power tampers or vibratory compactors until the required density is obtained. The surface of the fill shall be kept approximately level at all times and the portion of the fill to be occupied by the structure shall be maintained at the proper density by moistening and tamping if necessary, until the concrete or structure is in place.

3.4 The density of structural fill will be determined by AASHTO T 191 (Sand Cone Method), or by AASHTO T 310 (Nuclear Method) and shall be not less than 98 percent of the maximum density determined in accordance with AASHTO T 99 (Standard Proctor Test). This maximum density may also be determined by the control strip procedure in 304.3.8.

3.5 The Contractor shall notify the Engineer of the anticipated date of completion of the structural fill at least 3 working days prior to completion of the fill. Upon completion, the Contractor shall not proceed with any further operations on the fill until the Engineer has taken all of the necessary proof borings. When approval has been given, the Contractor shall backfill any drilled holes with saturated sand or other approved material.

3.6 The use of clean 1-1/2 in. (38 mm) stone fill as structural fill may be permitted by the Engineer under special circumstances, such as when dewatering problems occur during

foundation construction. The total thickness of stone fill shall not exceed 12 in. (300 mm). All compaction and density requirements of this specification shall apply when using stone fill.

Method of Measurement

4.1 Structural fill will be measured by the cubic yard as determined from the ground elevation immediately before the placement of any fill and the neat lines for the compacted material as shown on the plans.

Basis of Payment

5.1 The accepted quantity of structural fill will be paid for at the Contract price per cubic yard complete in place.

5.1.1 Concrete class F, flowable fill substituted for structural fill will be paid for at the Contract unit price for structural fill.

5.2 Excavation in preparation for this item will be paid for under Item 203.1 unless otherwise indicated on the plans. Any excavation for terracing and any backfilling of proof boring holes will not be measured but will be incidental to the work.

Pay Items and Units, Section 508– Structural Fill:

508	Structural Fill	Cubic Yard

SECTION 520 -- PORTLAND CEMENT CONCRETE

Description

1.1 General. This work shall consist of furnishing and placing portland cement concrete as shown on the plans or ordered.

1.2 Classes of Concrete. The following classes of concrete are included in these specifications:

Table 520- 1 Classes of Concrete

Class	Minimum Expected 28 Day Compressive Strength [1] PSI	Maximum Water/Cement Ratio [2]	Percent Entrained Air %
AAA [3]	5000	0.400	5 to 9
AAA	5000	0.444	5 to 9
AA [3]	4000	0.380	5 to 9
AA	4000	0.444	5 to 9
A	3000	0.464	4 to 7
B	3000	0.488	3 to 6
T [5]	3000	0.559	---
C	2000	0.532	
F	30[4]	3.0 to 4.0[5]	15 to 25[5]

[1] See 3.1.6 TESTING.
[2] For mixes containing fly-ash, silica fume, slag, or any other pozzolanic or cementitious material, the water/cement ratio of the concrete mix shall be based on the water cementitious (cement + pozzolanic or cementitious material) ratio of the mix. This water to cementitious ratio shall not exceed those listed in Table 520- 1. The maximum water/cement ratios listed for Concrete Class B and T are for design purposes only.
[3] Deck Overlays
[4] Maximum 84 day Compressive Strength for Flowable Fill, Excavatable shall not exceed 200 psi
[5] These are recommended values that may be used as a starting point for a mix design that has shown ability to meet the requirements. The amount of cement shall be adjusted and fly-ash or ground granulated blast furnace slag shall be used provided the mix design meets the minimum and does not exceed the maximum compressive strength in accordance with 2.10.1.

1.2.1 Unless otherwise shown on the plans, the specified class of concrete shall be used in the following applications.

(a) Footing concrete shall be Class B.
(b) Concrete above footings shall be Class A.

(c) Abutment backwall concrete shall be Class AA.
(d) Concrete bridge decks shall be Class AA.
(e) Concrete foundation seals shall be Class T.
(f) Class F, Flowable Fill, Excavatable may be specified or requested in writing as a substitute for compacted gravel in embankment, granular backfill, structural fill, and pipe backfill. Approval in the form of a supplementary agreement shall be in consideration of, but not limited to, differential frost heaving due to dissimilar materials, unit weight structural requirements, lack of permeability, and damming resulting from water flow cutoff. Flowable fill willnot be allowed in lieu of pavement. Class F, Flowable Fill shall be a flowable, self-consolidating, rigid setting and low density material.
(g) Precast concrete shall be Class AAA.

1.2.2 Retarding admixtures and Type G high range water reducing (HRWR) shall not be used in deck concrete when the existing air temperature is below 50 degrees For forecasted to drop below 50 degrees F within 24 hours after completion of placement.

Materials

2.1 Cement

2.1.1 Portland Cement shall be Type II or Type IP conforming to AASHTO M85 or M 240 as appropriate, unless otherwise shown on the plans or permitted. Mill test reports shall be furnished with each delivery of cement.

2.1.2 Cement used in visible portions of the work shall be the same brand, type and color unless otherwise permitted.

2.1.3 Cement containing lumps or partial set, shall not be used.

2.1.4 Supplemental Cementitious Materials

2.1.4.1 Fly-Ash and Ground Granulated Blast Furnace Slag.

2.1.4.1.1 Fly-ash shall conform to Class C or Class F as described in AASHTO M 295. Ground Granulated Blast Furnace Slag (GGBFS) shall be Grade 120 or Grade 100 slag meeting the requirements of AASHTO M 302.

2.1.4.1.2 Only one source of fly-ash or ground granulated blast furnace slag shall be used on any one project.

2.1.4.1.3 Requirements. Fly-ash shall conform to the chemical, physical and methods of sampling and testing requirements of AASHTO M 295 except that the CaO content shall be 8% or less and in the optional physical requirement, the multiple factor shall be 120 percent maximum. In addition, the fly-ash shall be subjected to the Air-Entrainment of Mortar Test as listed in ASTM C 311 and shall conform to the requirements as listed in the optional physical requirements of AASHTO M 295 for

the uniformity requirements. Ground granulated blast furnace slag shall be Grade 120 or Grade 100 conforming to the chemical, physical, and methods of sampling and testing requirements of Ground Iron Blast Furnace Slag for Use In Concrete and Mortars as listed in AASHTO M 302.

2.1.4.1.4 Certification. The Contractor shall furnish the Department three copies of the materials test results and certification from each fly-ash or ground granulated blast furnace slag source proposed for use. The certification shall state the fly-ash or ground granulated blast furnace slag used on the project meets the requirement as stated in 2.1.4.1.3 and shall be for a specific, identifiable quantity.

2.1.4.1.5 Fly-ash produced from a particular source shall be tested by the Contractor for loss on ignition and fineness at the frequency of one test per 100 tons used. Complete testing of fly-ash shall be done by the Contractor at a frequency of one test per 400 tons of fly-ash used or as directed by the Department.

2.1.4.1.6 Under the direction of the Department, fly-ash or ground granulated blast furnace slag shall be sampled by approved means and shall be placed into a sealed container.

2.2 Aggregates.

2.2.1 General.

2.2.1.1 All aggregates shall be thoroughly washed unless otherwise permitted. Aggregates shall be stockpiled for a minimum of 24 hours before use.

2.2.1.2 The Contractor shall make arrangements for the Engineer to secure samples from all stockpiles in sufficient time to complete testing and mix design prior to starting concrete operations. If the stockpiles aggregates are approved, similar aggregates from the same sources will be considered acceptable, subject to restrictions of the item for which the aggregates are to be used. No change in the source or character of the aggregates shall be made without prior notification to and approval by the Engineer. Failure of any test taken prior to starting each placement will result in cancellation of the placement until corrective measures have been taken and the aggregates have been approved.

2.2.1.3 Unless frozen aggregates are dispersed during mixing, they shall not be permitted.

2.2.2 Method Requirements

2.2.2.1 Fine Aggregate.

2.2.2.1.1 Fine aggregate shall consist of sand, stone screenings or other inert materials with similar characteristics or a combination thereof. Tests for organic impurities shall be in accordance with AASHTO T 21 and T 71.

2.2.2.1.2 Required Grading:

Table 520- 2 Fine Aggregate Gradation

Sieve Size	Percentage by Weight Passing
3/8 inch	100
No. 4	95 - 100
No. 8	80 - 100
No. 16	50 - 80
No. 30	25 - 60
No. 50	10 - 30
No. 100	2 - 10
No. 200	0 - 3

2.2.2.1.2.1 The gradation of fine aggregate from any source shall be reasonably uniform and the fineness modulus as determined by AASHTO M 6 shall lie between 2.5 and 3.1. Fine aggregate showing a variation in fineness modulus greater than 0.2 above or below that upon which the mix was designed, may be rejected.

2.2.2.1.3 The requirements of 2.2.2.1.2 will not apply to fine aggregate for concrete class F, flowable fill. For concrete class F the fine aggregate grading shall be submitted with the mix design.

2.2.2.2 Coarse Aggregate.

2.2.2.2.1 Coarse aggregate shall consist of crushed stone, gravel or other approved inert materials with similar characteristics or combinations thereof, having hard, strong, durable particles free from surface coating and injurious amounts of soft, friable or laminated pieces and free of alkaline, organic or other harmful matter. Material passing the No. 200 sieve as determined by AASHTO T 11 shall not exceed 1.0 percent by weight. Thin or elongated particles shall not exceed 10 percent by number as determined by ASTM D 4791, on a 3 to 1 ratio and a minimum of 100 particles. The percent of wear shall not exceed 40 as determined by AASHTO T 96.

2.2.2.2.2 Required Grading:

Table 520- 3 Coarse Aggregate Gradation

Concrete Class	A [1], B, and T	A, AA and AAA	Overlay
Std. Stone Size	467	67	89
Nominal Size	1-1/2" to No. 4	3/4" to No. 4	3/8" to No. 16
SIEVE SIZE	**PERCENTAGE by WEIGHT PASSING**		
2 inch	100		
1-1/2 inch	95-100		
1 inch		100	
3/4 inch	35-70	90-100	
1/2 inch			100
3/8 inch	10 - 30	20-55	90-100
No. 4	0-5	0-10	20-55
No. 8		0-5	5-30
No. 16			0-10
No. 50			0-5

[1] 1-1/2 inch maximum size coarse aggregate for Class A concrete may only be used with approval of the Engineer.

2.2.2.2.3 Unless otherwise specifically permitted, coarse aggregate shall be furnished and stockpiled in a minimum of 2 sizes and the amount of each size to be used shall be determined by combining the individual gradations of each stockpile mathematically to provide a well graded mixture conforming to Table 520- 3.

2.3 Chemical Admixtures

2.3.1 Chemical Admixtures shall be products as included on the New Hampshire Department of Transportation Qualified Products List.

2.3.2 Air entraining admixtures shall meet the requirements of AASHTO M 154. If the Contractor requests permission to use an unfamiliar air entraining admixture, evidence shall be submitted to prove that the admixture complies with AASHTO M 154. The evidence shall be based on tests performed in a laboratory of a State Highway Department, the FHWA, or in a laboratory which is regularly inspected by the Cement and Concrete Reference Laboratory of the National Institute of Standards and Technology. Tests may be made upon samples taken from a quantity submitted and certified by the manufacturer as representative of the admixture to be supplied.

2.3.2.1 When using high range water reducing admixture the air entrainment admixture shall be Vinsol Resin or approved equal conforming to AASHTO M 154.

2.3.3 Water reducing admixtures shall meet the requirements of AASHTO M 194, Type A.

2.3.3.1 Water-reducing, high-range admixtures shall conform to AASHTO M 194 Type F or Type G.

2.3.3.1 Corrosion inhibitor admixture shall conform to AASHTO M 194 (ASTM C 494) Type C.

2.3.4 Water reducing and retarding admixtures (herein referred to as retarding admixtures), shall meet the requirements of AASHTO M 194, Type D.

2.3.5 Calcium chloride may only be used with specific permission of the Engineer.

2.3.6 Admixtures shall be stored in a suitable building in such a manner as to permit easy access and identification and to protect the admixtures from freezing. Admixtures will be rejected if precipitation has occurred in the container.

2.3.7 Silica Fume shall conform to AASHTO M307, Microsilica for use in Concrete and Mortar.

2.3.7.1 Bags used to supply silica fume shall not be incorporated into the concrete.

2.4 Blank.

2.5 Water.

2.5.1 Water for use in concrete shall be free from oils, acids, organic matter or other deleterious substances and shall not contain more than 500 parts per million of chlorides as Cl nor more than 1000 parts per million of sulfates as SO_4. In addition water used in portland cement concrete shall be free from iron, tannic acid, and other impurities which may cause staining or discoloration.

Water from municipal supplies approved by the State of New Hampshire Department of Environmental Services will not require testing, but water from other sources will be sampled and tested before being used in concrete, once per source unless otherwise directed. Tests shall be made in accordance with AASHTO T 26. A sample of approximately 1 gallon will be obtained by Department personnel.

The hydrogen ion concentration (pH) shall be determined electrometrically or colorimetrically and be between pH 4.5 and pH 8.5.

The water shall not contain any impurities in amounts sufficient to cause unsoundness or marked change m the time of setting in the cement with which it is mixed, nor a reduction mortar strength of more than 10 percent compared to the results obtained with distilled water.

2.6 Curing Materials for Concrete.

2.6.1 Burlap shall conform to AASHTO M 182. The use of worn burlap, burlap with holes or burlap reclaimed from uses other than curing concrete will not be permitted.

2.6.2 Sheet materials shall be waterproof paper, polyethylene film or white burlap-polyethylene sheeting conforming to AASHTO M 171.

2.6.3 Liquid curing compound shall be products as included on the New Hampshire Department of Transportation Qualified Products List. Resin or wax based curing compounds shall not be used on concrete where water repellants are to be applied. Pigmented curing compounds shall not be used on surfaces that are to be membraned.

2.6.3.1 Liquid curing compound shall be Type ID (fugitive dye), Class B or Type 2 (white pigmented), Class B conforming to AASHTO M 148 except as modified herein. The vehicle shall have a resin base and contain no waxy compounds. The compound shall dry to touch within 4 hours when applied at the rate of 1 gallon per 200 square feet of concrete.

2.6.4 Cotton mats shall consist of a filling material of cotton "batting" 12 oz/square yard; covered with unsized cloth 6 oz/Square Yard ; tufted or stitched to maintain stability. Mats shall be free from tears and shall be in good condition.

2.6.5 Water for curing shall meet the requirements of 2.5, above.

2.7 Preformed Expansion Joint Fillers for Concrete. Preformed Expansion Joint Fillers for Concrete shall conform to AASHTO M 153, Type II, unless Type III is shown on the plans.

2.8 Concrete Bonding Agent. Concrete Bonding Agents shall be products as included on the New Hampshire Department of Transportation Qualified Products List and be used as shown on the plans or as ordered.

2.9 Storage of Concrete Materials.

2.9.1 The handling and storage of concrete materials shall be such as to prevent their segregation or contamination by foreign materials. When directed, the aggregates shall be stored on suitable platforms or on clean, level, paved surfaces if segregation or contamination continues to occur. Aggregates shall be stored in separate stockpiles sufficiently removed from each other to prevent the aggregates from becoming intermixed. To prevent spillage from one bin to the next, buckets used to fill the bins shall not be wider than the clear opening of the bins. Evidence of intermixing, segregation or contamination will because for rejection.

2.9.2 Unless otherwise permitted, cement shall be stored in approved weatherproof silos or buildings which will protect the cement from dampness. The floors of the buildings shall be

sufficiently clear of the ground to prevent the absorption of moisture. When storage in the open is permitted, the cement shall be placed on raised platforms and completely covered with a waterproof covering.

2.9.3 The locations of the stockpiles and the facilities for storing cement, shall be subject to approval.

2.9.4 Storage of Fly-Ash or Ground Granulated Blast Furnace Slag.

2.9.4.1 The approved fly-ash or ground granulated blast furnace slag shall be stored in weather-tight storage facilities at the source and the concrete plant. The storage facilities shall be subjected to approval by the Department. All storage facilities shall be completely empty and clean before fly-ash or ground granulated blast furnace slag is deposited therein unless they contain fly-ash of the same type from the same source.

2.9.4.2 Fly-ash or ground granulated blast furnace slag from different sources or of different types shall not be stored together in the same storage container. Adding fly-ash or ground granulated blast furnace slag to partially filled storage containers shall be allowed only for fly-ash or ground granulated blast furnace slag of the same type from the same source. Fly-ash added to a partially filled storage container shall not vary from the fly-ash in the container by more than 0.5% in Loss on Ignition and by more than 5% in Fineness.

2.9.4.3 Fly-ash or ground granulated blast furnace slag remaining in bulk storage for a period greater than one year after completion of test will be resampled and retested before shipment or use. However, fly-ash or ground granulated blast furnace slag which has been in bulk storage more than two years from the time of original manufacture shall not be used. Fly-ash or ground granulated blast furnace slag stored over the winter at the concrete producing plant shall be retested for specification compliance.

2.9.5 Shipping fly-ash or ground granulated blast furnace slag shall be in accordance with accepted techniques for bulk portland cement or as directed by the Department.

2.10 Concrete Mixes.

2.10.1 General

2.10.1.1 The concrete mix shall be composed of a mixture of aggregate, cement, supplemental cementitious material, All concrete mix designs shall provide for mitigation of alkali silica reactivity by the following: water and chemical admixtures as required. The several aggregate fractions shall be sized, uniformly graded and combined in such proportions that the resulting mix meets the grading requirements of Table 520- 4 or Table 520- 5.

2.10.1.1.1 The Contractor shall supply laboratory test reports that contain data on the mineralogy and potential reactivity for all aggregates being used in the concrete mix.

All aggregates shall be tested in accordance with the requirements of AASHTO T 303 to determine alkali-silica reactivity. The laboratory supplying the test results shall provide evidence that the laboratory is properly equipped and qualified to perform the test methods. All test results submitted for alkali-silica reactivity shall be from tests conducted within one calendar year from the date the mix design is submitted to the Department.

2.10.1.1.2 Mix designs using potentially alkali reactive aggregates shall include mitigation for reactivity and shall be submitted to the Department for approval. Mitigation of potentially reactive aggregates shall consist of one or more of the following methods: use of low alkali cement (less than 0.6 percent Na2O equivalent); use of a mineral admixture; or use of a chemical admixture. The proposed mitigation method will be accepted for use after the Engineer reviews test results supplied by the Contractor that show the effectiveness of the mitigation. An effective mitigation technique shall reduce the mean expansion to below 0.10% for alkali-silica reactivity when tested in accordance with ASTM C 1567.

In lieu of the above, mitigation may be by substitution of a minimum 25% fly-ash or 50% ground granulated blast furnace slag for cement by weight.

2.10.2 Method Requirements

2.10.2.1 The concrete mix design limits given in Table 520- 4or Table 520- 5 indicate the master ranges of mixes permissible under this specification. No work shall be started on a project until the Engineer approves a mix design appropriate for the raw materials and blends of approved aggregates available for the specific project. The mix design shall be within the master ranges indicated for the particular class of concrete specified. The mix design for each mix shall establish a single percentage aggregate passing each required sieve size in accordance with Table 520- 4 and Table 520- 5, a cement factor, water cement ratio and target strength as shown in Table 520- 1. Gradings which range from the maximum of one sieve size to the minimum of the next, will not be permitted. Mix design submittals shall include results of strength and permeability testing. Strength test results shall be comprised of two test cylinders tested for compressive strength at 28 days (a set of two averaged to comprise one strength test) in accordance with AASHTO T 22 & 23. Rapid Chloride Permeability testing shall be completed in accordance with AASHTO T 277 at an age of 56 days. No concrete placement shall be started on a project until the Engineer has approved the mix design for that placement. The mix design for each mix shall be in effect until modified in writing by the Engineer.

2.10.2.1.1 Should a change in sources of material be made, a new mix design shall be established before the new material is used. When unsatisfactory results or other conditions make it necessary, the Engineer may establish a new mix design.

2.10.2.1.2 Except for Class F, aggregate fractions shall be sized, uniformly graded and combined in such proportions that the resulting mix meets the grading requirements of Table 520- 4 or Table 520- 5

2.10.2.1.3 Alternate mix designs for excavatable flowable fill and other categories of flowable fill, will be allowed, providing the mix design for each is approved by the Engineer. Other categories of flowable fill might include non-excavatable, ultra-light weight, very flowable or other combinations. Alternative flowable fill mix designs would be used when specified or ordered. All mix designs submitted for approval shall have test results that have determined compressive strength, unit weight and excavatability. Test cylinders used in testing must be evaluated at 84 days. Compressive strength test cylinders will be prepared according to ASTM D 4832

2.10.2.2 Master Ranges for Combined Aggregates.

Table 520- 4 Coarse Aggregate Gradation With SG Less Than 2.700

Sieve Size	Concrete Classes* A [1], B, and T			Concrete Classes** A, AA, AAA		
	Percentage by Weight Passing			**Percentage by Weight Passing**		
	Min.	**Desired**	**Max.**	**Min.**	**Desired**	**Max.**
1-1/2 inch	95	100	100			
1 inch		80			100	
3/4 inch	56	68	80	94	97	100
1/2 inch		57			77	
3/8 inch	38	46	55	51	62	73
No. 4	31	35	39	37	42	47
No. 8		29			34	
No. 16	16	23	30	19	27	35
No. 30		14			17	
No. 50	4	7	10	4	8	12
No.100	1	2	3	1	2	4
No.200	0	0	2	0	0	2

* Class A[1], B and T based on fine aggregate content of 32 to 36 percent of the total aggregate.
**Class A, AA and AAA based on fine aggregate content of 38 to 42 percent of the total aggregate.
[1] See footnote to Table 520- 3

Table 520- 5 Coarse Aggregate Gradation With SG 2.700 and Over

Sieve Size	Concrete Classes* A [1], B, and T			Concrete Classes** A, AA, AAA		
	Percentage by Weight Passing			**Percentage by Weight Passing**		
	Min.	**Desired**	**Max.**	**Min.**	**Desired**	**Max.**
1-1/2 inch	97	100	100			
1 inch		83			100	
3/4 inch	57	69	82	95	97	100
1/2 inch		61			81	
3/8 inch	45	52	59	55	65	76
No. 4	36	40	44	42	47	53
No. 8		34			40	
No. 16	20	27	35	22	31	40
No. 30		17			19	
No. 50	4	8	12	5	9	14
No.100	1	2	4	1	2	4
No.200	0	0	2	0	0	2

*Class A[1], B and T based on fine aggregate content of 38 to 42 percent of the total aggregate.
**Class A, AA and AAA based on fine aggregate content of 44 to 48 percent of the total aggregate.
[1] See footnote to Table 520- 3

Construction Requirements

3.1 Proportioning and Batching

3.1.1 Proportioning

3.1.1.1 All ingredients shall be measured by weight unless otherwise permitted. Scales shall be approved beam type with a separate tare beam or spring-less dial type, accurate to within 0.5 percent of the total load.

3.1.1.2 Cement shall be weighed on a separate scale. Weights for bagged cement when its use is permitted will be assumed to be 94 pounds; fractional bags shall not be used.

3.1.1.3 Aggregate weights shall be dry weights adjusted for moisture.

3.1.1.4 Mixing water shall consist of free moisture on the aggregates, ice if added, and water added to the batch. Water added to the batch shall be measured by weight or an approved volumetric method to an accuracy of 1 percent. Water meters shall be so installed that they are unaffected by pressure or temperature changes in the water supply.

Graduated tanks shall be equipped with outside taps and valves for checking their calibration.

3.1.1.5 Each approved admixture shall be added to a separate portion of the fine aggregate or water as recommended by the manufacturer to eliminate premixing of the additives. Separate calibrated standpipes with positive action discharge tubes, readily visible from the batching area, shall be provided at all concrete producing plants regardless of metering devices.

3.1.1.6 The ratio of substitution of cement to fly-ash or ground granulated blast furnace slag shall be 1:1

3.1.1.7 When specified, corrosion inhibitor (calcium nitrate) admixture shall be as shown on the New Hampshire Department of Transportation Qualified Products List. Corrosion inhibitor shall be used at the rate recommended by the manufacturer unless otherwise directed by the Engineer.

3.1.2 Batching.

3.1.2.1 Batch plants shall meet the requirements of AASHTO M 157 except as modified herein. The plants shall have one bin for fine aggregate and one bin for each required size of coarse aggregate. Each bin shall discharge efficiently and freely into the weighing hopper.

3.1.2.2 All new, replaced, or major modification of existing batching plants shall be equipped for fully automatic proportioning and batching of all ingredients including admixtures.

3.1.2.2.1 Automatic batching plants shall be controlled by means of an approved automatic batch selector set to accurately deliver in proper sequence the designed mix proportions and admixtures required for the batch. The batch selector controls shall be locked and sealed during operation. Changes in selector controls or weight settings shall not be made without authorization. Provisions shall be made to vary the size of the batch without affecting the proportions of the design mix.

3.1.2.2.2 All batch equipment in automatic plants shall be interlocked to prevent the discharge of any ingredient into the system until all batching controls have been cleared of the previous batch and the discharge gates and supply valves are closed.

3.1.2.2.3 A moisture meter equipped with automatic adjustable compensating controls shall be installed to accurately and continuously measure the moisture content of the fine aggregate. The moisture compensating dial shall automatically adjust the amount of batch water added and the batch weight of the fine aggregate consistent with the variations of free moisture in the fine aggregate.

3.1.2.2.4 If the automatic proportioning devices become inoperable or malfunction during a concrete placement, the plant may operate manually for the completion of the pour. If the breakdown is readily correctable or is due to a condition within the producer's control, the plant will not be permitted to operate. If unavailability of parts or service or any condition beyond the producer's control exists, written permission may be given to operate the plant manually for a specified period. Accuracy shall be maintained as specified in 3.1.1.

3.1.3 Consistency.

3.1.3.1 Mortar proportions shall be kept to the lowest that will provide the desired workability. Mixing water shall be kept to the minimum that will produce the required consistency as measured in accordance with AASHTO T 119, as modified in 3.1.5. and does not exceed the water/cement ratio established by Table 520- 1, unless authorized by the Engineer. Slumps shall be kept within the following limits unless otherwise permitted:

Footings and mass concrete	1 inch - 3 inch
Columns and pedestals	2 inch - 4 inch
Decks and sidewalks	2 inch - 3 inch
Tremie concrete	6 inch - 8 inch
Walls over 18 inch thick	2 inch - 3 inch
Walls 18 inches thick and under	2 inch - 4 inch
Concrete with high range water reducer	8 inch maximum

3.1.4 Air-Entrainment.

3.1.4.1 Air-entrainment of the required percentage shall be obtained by the use of air-entraining admixture unless otherwise permitted. Air content will be determined in accordance with AASHTO 152 except as modified in 3.1.5.1.

3.1.4.2 The percentage of air-entrainment for pumped concrete shall be taken at the discharge end of the pump line.

3.1.5 Testing.

3.1.5.1 When ordered, test cylinders shall be made in accordance with AASHTO T 141 except that the entire sample for test cylinders and testing air-entrainment and slump may be taken at one time from the middle of the batch. Errors in proportioning or mixing as evidenced by excessive slump will be cause for rejection. Cylinders shall be made and cured in accordance with AASHTO T 23. To determine compliance with Table 520- 1 cylinders shall be tested in accordance with AASHTO T 22 and the test strength shall be the average compressive strength of at least two cylinders tested at the end of the 28 day curing period.

3.1.5.2 For concrete class F, flowable fill cylinders for compressive strength tests will be prepared when required in accordance with ASTM D 4832

3.1.5.3 Unit weight shall be determined in accordance with AASHTO T 121.

3.2 Forms and Falsework.

3.2.1 Drawings and data for forms and falsework shall be submitted in accordance with 104.02. A concrete weight of 150 pounds per cubic foot and a live load of 50 pounds per square foot shall be used in calculations. Adequate provisions shall be made for the effect of vibration and impact on the forms and falsework.

3.2.2 Wood forms and bracing materials shall be of approved lumber, mortar tight, and free of imperfections on exposed surfaces. Forms shall have sufficient studs, walers, and stiffbacks to eliminate bulging and shrinking. Surfaces which will be exposed to view in the final structure shall be formed with plywood unless otherwise specified or permitted. Plywood which will not give a concrete finish essentially equal to new plywood shall not be used. All plywood shall be placed with the grain horizontal.

3.2.3 Forms shall be installed to the lines and grades shown on the plans or ordered. Forms for grade lines exposed to view such as top of curbs, walls, bearing areas, and the like, shall be cut to grade unless otherwise permitted. Wood in contact with the concrete shall be treated with an approved form release compound prior to erection. Cleaning and inspection ports shall be provided as ordered.

3.2.4 Ties and anchorages for use in forms above the top of footings shall be fabricated so as to be removed to a minimum depth of 2 inches without injury to the concrete.

3.2.5 Chamfer strips shall be installed as shown on the plans or ordered. Joints which are to receive external waterproofing shall not be chamfered.

3.2.6 Metal forms shall comply with the pertinent requirements of 3.2.2. Projections into the finished concrete surface will not be permitted. Connection devices shall hold the forms rigidly in alignment and shall be removed without injury to the concrete.

3.2.6.1 Forms made of other materials such as fiberglass or plastic may be used when permitted.

3.2.7 Falsework shall be placed on an approved solid footing or piling. Provisions shall be made for adjusting forms to grade and compensating for settlement during placement of concrete. Improper or inadequate bracing shall be satisfactorily corrected.

3.2.8 Stay in place deck forms shall not be allowed unless specifically allowed on the plans.

3.3 Weepers and Drains.

3.3.1 Four-inch weepers at approximately 10 feet on centers shall be placed at the elevations shown or ordered unless otherwise directed. Coarse gravel or stone shall be placed at the inlets and outlets to permit unobstructed flow of the weepers. An approved geotextile patch may be substituted on the inlet end of weepers in place of the coarse gravel or stone.

3.4 Ready-Mixed Concrete.

3.4.1 General.

3.4.1.1 Ready-mixed concrete is defined as portland cement concrete manufactured for delivery in a plastic state. It shall be in compliance with AASHTO M 157 or as modified herein.

3.4.1.2 Ready-mixed concrete shall be mixed and delivered to the point designated by means of one of the following combinations of operations:

(a) Central-mixed concrete. Mixed completely in a stationary mixer and delivered in a truck mixer operating at agitation speed.
(b) Shrink-mixed concrete. Mixed partially in a stationary mixer and the mixing completed in a truck mixer.
(c) Transit-mixed concrete. Mixed completely in a truck mixer.

3.4.1.3 Non-agitating equipment will not be permitted for transportation.

3.4.2 Mixers.

3.4.2.1 Each mixer shall have metal plate or plates attached in a prominent place by the manufacturer, plainly marked with the gross volume of the drum, the capacity of the drum or container in terms of the volume of mixed concrete, and the mixing and agitating speeds. The volume of mixed concrete shall not exceed 63 percent of the total volume of the drum or container when the concrete is in transit or shrink-mixed, or 80 percent of the total volume when the concrete is central-mixed. Stationary mixers shall be equipped with an acceptable timing device that will not permit the batch to be discharged until the specified mixing time has elapsed.

3.4.2.2 When loaded to capacity, all mixers shall be capable of combining the ingredients of the concrete into a thoroughly mixed and uniform mass, and of discharging the concrete with a satisfactory degree of uniformity at a rate which will not inhibit the rate of placement required. The rate of discharge shall be governed by the speed of rotation and not by restrictions of the discharge opening.

3.4.2.3 Mixers will be subject to inspection as frequently as considered necessary. If found unfit to function properly, the mixers will be disapproved for use until correct

operating conditions have been restored. The pickup and throw-over blades shall be replaced or repaired when they have become worn 1 inch or more below the original height of the manufacturer's design, or have become loose, broken, bent, scalloped, or otherwise damaged. Any accumulation of hardened concrete shall be removed.

3.4.2.4 The Engineer may make tests for consistency of individual samples at approximately the beginning, the midpoint, and the end of the load. If the concrete is not of uniform quality, the mixer shall not be used until the condition is corrected and the mixer has been re-inspected and approved.

3.4.3 Mixing.

3.4.3.1 Mixers shall be operated with the limits of their capacity as specified in 3.4.2.1 or as designated by the manufacturer of the equipment, whichever is less, and shall not exceed the speed of rotation designated by the manufacturers.

3.4.3.2 When shrink-mixed or central-mixed concrete is used, mixing time shall be measured from the time all the solid material is in the drum. The batch shall be so charged that some water will enter in advance of the cement and aggregates and all water will be in the drum by the end of the first one fourth of the specified mixing time.

3.4.3.3 Where mixer performance tests have not been made, the minimum mixing time for mixers having capacities less than 1 cubic yard shall be 1 minute. For mixers of greater capacity, the minimum mixing time shall be increased by 15 seconds for each cubic yard of additional capacity or fraction thereof.

3.4.3.4 When shrink-mixed concrete is used, the mixing time in the stationary mixer shall be at least that required to intermingle the ingredients. After transfer to a truck mixer, mixing at mixing speed and turning at agitating speed will be required as specified in 3.4.3.5.

3.4.3.5 When transit-mixed concrete is used, mixing shall be performed at the site of the work unless otherwise permitted. If the required uniformity is not obtained within 100 revolutions of the mixer after all ingredients are in the drum, that mixer shall not be used until the condition is corrected. Additional revolutions of the mixer beyond the number found to produce the required uniformity shall be at agitating speed except as stated in 3.4.3.7.

3.4.3.6 The Contractor shall provide a delivery record for each truckload of concrete. The delivery record shall include but not be limited to: date, time batched/time discharged, quantity (quantity batched this load), actual batched weights of: cement, admixtures, water, aggregates and aggregate moisture (percent). Target weights or out of tolerance notification will also be given for each of the actual batched weights given on the delivery record.

3.4.3.7 Water shall not be added after the initial introduction of the mixing water to the batch except when the slump is unsatisfactory. Such additional water as necessary, up to the amount permitted in Table 520- 1, may be added to bring the slump within the limits specified in 3.1.3. The drum shall then be turned an additional 30 revolutions at mixing speed. Water shall not be added at any later time unless permitted.

3.4.3.8 Mixing shall begin within the 30 minute period after the cement has been added to the aggregates unless otherwise permitted.

3.4.3.9 When pumps are used, truck mixers shall be scheduled and adjusted to the capabilities of the pumping units and the rate of placement to provide continuous pumping without excessive waiting time before discharge. Whenever possible, pumps shall be placed so that 2 trucks may discharge into the hopper at the same time. Actual discharge shall be such that the last of the load of one is discharged into the hopper with the beginning or middle portion of the other.

3.4.3.10 Additional high range water reducing admixture, not to exceed the manufacturer's recommendation, may be required to be added at the project to reach slump requirements.

3.5 Placing Concrete.

3.5.1 General.

3.5.1.1 The Contractor shall notify the Engineer at least three working days in advance of each concrete placement to allow for sufficient time to schedule required inspection and testing. A pre-pour conference shall be mandatory prior to any deck placement.

3.5.1.2 Concrete shall not be placed without inspection. Concrete so placed will be removed at the Contractor's expense unless authorized by the Engineer.

3.5.1.3 Approval will be required for alignment and grade, formwork and bracing, reinforcing steel and other inclusions, and the cleanliness of the forms prior to placing concrete.

3.5.1.4 If the Contractor proposes to place concrete by pumping, a detailed plan outlining his proposed method of operation shall be furnished along with a list of the pumping units proposed, the manufacturer's specifications and capabilities of the units, slickline diameter and maximum length of same, diameter and length of any flexible lines proposed, and the allowable continuous pumping pressure of each unit. This information shall be furnished seven days in advance of the scheduled operation to permit study of the equipment and methods proposed and the satisfactory resolution of any questions arising.

3.5.2 Equipment.

3.5.2.1 All equipment used in placing concrete shall be approved for the particular use intended. Equipment which will be in contact with the fresh concrete shall be mortar-tight and free of caked-on mortar and other contaminants. If other methods are not satisfactory, sandblasting will be required for cleaning.

3.5.2.2 Crane buckets for placing concrete shall be low-slump type unless otherwise permitted. Hooks for handling buckets shall be equipped with a safety device to prevent accidental disengagement.

3.5.2.3 Chutes, when permitted, shall be of approved materials and installed so as to prevent segregation. Any sign of segregation will result in rejection of chuting and utilization of an alternate approved method of placement.

3.5.2.4 Aluminum shall not be used in any equipment where it would be in contact with the fresh concrete.

3.5.2.5 When pumping concrete, the number and lengths of flexible lines shall be kept to the minimum required for distribution. Transition sections used to reduce the diameter of lines shall be of slickline material and shall be as long as possible.

3.5.3 Placing

.

3.5.3.1 General

3.5.3.1.1 Concrete shall be placed in its final location as soon as possible after mixing. Segregation of the mix or displacement of materials inside the forms will not be permitted.

3.5.3.1.2 Concrete shall be placed in layers not to exceed 12 inches and placing intervals shall not exceed 30 minutes unless otherwise permitted. Concrete which has attained a partial set shall not be used.

3.5.3.1.2.1 When placing deck concrete, concrete shall not be placed more than 10 ft. ahead of the finishing machine.

3.5.3.1.3 In the event of unscheduled stoppage of the work, vertical bulkheads shall be installed to insure a minimum depth of 6 inches of concrete in the next lift of concrete when placement is resumed. See 3.6.2 also.

3.5.3.1.4 Care shall be taken to keep the concrete pressure on ties and forms within the design limits. Concrete shall not be dropped a distance of more than 5 feet unless contained within a tremie, elephant trunk, or other approved system.

3.5.3.1.5 Concrete which has attained its initial set shall not be disturbed by personnel, equipment, or other construction operations for a minimum period of 72 hours unless otherwise permitted.

3.5.3.1.6 Defective sections of concrete shall be removed and replaced or repaired as directed.

3.5.3.1.7 Means to contain concrete class F, flowable fill within a designated space shall be provided. Approved methods to prevent pipes from floating during placement of concrete shall be used.

3.5.3.1.8 For earthen backfill operations or vehicle traffic for paving operations, concrete class F, flowable fill shall be left undisturbed until the material obtains sufficient strength to support the weight of foot traffic without deformation

3.5.3.1.9 When concrete is to be placed against granite bridge curb; the granite curb shall have been kept continuously wet for a period of 12 hours before coming into contact with the fresh concrete. Care shall be taken when removing soaking material to ensure that the curbing remains wet until the fresh concrete is placed against it. Any standing water shall be removed before the concrete is placed.

3.5.3.1.10 When concrete is to be placed against any precast concrete member, the precast concrete member shall have been kept continuously wet for a period of 3 hours before coming into contact with the fresh concrete. Care shall be taken when removing soaking material to ensure that the member remains wet until the fresh concrete is placed against it. Any standing water shall be removed before the concrete is placed.

3.5.3.1.11 Any concrete that is not in place 1 ½ hours after the cement has been added to the aggregates shall not be used unless otherwise permitted by the Engineer. The Engineer may extend this time limitation if the concrete workability (slump) stills allows for the concrete to be placed without the addition of water to the batch. In hot weather, or under conditions contributing to quick loss of workability, a time less than 1 ½ hours may be required.

3.5.4 Consolidation.

3.5.4.1 Unless otherwise permitted, consolidation of all concrete shall be achieved by the use of approved internal vibrators with a frequency range of 7,000 to 10,000 impulses per minute. Vibrators used in concrete containing epoxy coated reinforcing steel shall be equipped with a non-metallic-coated head. Concrete shall not be moved excessive distances by the use of vibrators.

3.5.4.2 Vibrators shall be inserted vertically into the fresh concrete and withdrawn slowly. Vibration shall continue until consolidation is achieved and stopped before

segregation occurs or water is forced to exterior concrete surfaces in appreciable amounts.

3.5.4.3 Concrete shall not be placed at a rate greater than that which can be thoroughly consolidated by the vibrators in use. The number of vibrators required will be based on the maximum predicated rate of placement. At least one reserve vibrator shall be furnished.

3.5.4.4 No consolidation or vibration of concrete class F, flowable fill is required.

3.5.5 Depositing Concrete Under Water

3.5.5.1 Unless otherwise specifically permitted, all concrete placed in water shall be placed by tremie. Slump shall comply with 3.1.3.

3.5.5.1.1 Pumping for underwater placement of concrete shall also be into a tremie unless specific permission is given for direct placement by pump lines. Placement by direct pumping, if permitted, will require the hose to be securely fastened to the cofferdam frame at all times to eliminate surging of the hose in the concrete. If at any time the procedure becomes unacceptable, the remainder of the concrete shall be placed by a tremie. Tremie equipment shall be available on site prior to the start of pumping operations.

3.5.5.2 A tremie shall consist of a watertight tube attached to a hopper of approved size with an adequate working space provided around the hopper. The tremie shall be attached to a crane or other approved hoisting equipment to permit lifting and lowering the tremie with sufficient rapidity to control and stop the flow of concrete as required. The equipment shall be capable of moving the tremie over the entire surface of the placement area.

3.5.5.3 At the start of placing operations, and at any time thereafter that the tremie is withdrawn from the concrete, and approved watertight plug shall be inserted into the discharge end of the tremie. The tremie shall be lowered until it rests on the bottom or in freshly deposited concrete. It shall then be checked for leaks. If watertight, the tremie tube and hopper shall immediately be filled with concrete. The hoisting mechanism shall then raise up the tremie to permit the discharge of the concrete without removal from freshly deposited concrete. The tremie shall then be lowered to stop the flow of concrete before it has dropped below the level of the bottom of the hopper. The hopper shall again be filled and the process repeated until the desired intermediate or final grade is attained. Top concrete surfaces shall be approximately horizontal.

3.5.5.4 Concrete foundation seals shall be placed as shown on the plans or ordered. The elevation of the top of the seal and the required depth may need to be determined after the excavation is completed.

3.5.5.5 Test cores of approximately 2 inch diameter shall be taken through all concrete deposited underwater on rock. The cores shall penetrate a minimum of 1 foot into the rock. One core shall be taken near each corner and one shall be taken near the center. Should evidence of voids, seams or unsatisfactory concrete be discovered, additional cores shall be taken as ordered. Unsatisfactory material shall be removed and replaced or repaired as directed.

3.5.6 Substructure

3.5.6.1 All substructure concrete shall be placed in the dry unless otherwise permitted. Footings shall be placed at the elevations shown on the plans or ordered.

3.5.7 Superstructure

3.5.7.1 Compliance with superstructure concrete placing sequences shown on the plans will be mandatory unless prior approval is secured for an alternate sequence. If a pouring sequence is not shown, the Contractor shall submit his proposed pouring sequence for approval. Sufficient concrete placing units shall be furnished to maintain plasticity requirements. If there are multiple placements there shall be more than 72 hours between placements.

3.5.7.2 Concrete operations on steel structures shall not start until all temporary falsework and bracing have been removed unless otherwise permitted.

3.5.8 Bridge Deck Overlays.

3.5.8.1 Surface Preparation. The concrete deck shall be clean and free of laitance, oil, surface moisture, membrane residue, and other foreign materials. Abrasive blast cleaning may be required by the Engineer to achieve a suitable surface.

3.5.8.2 Placing Bridge Deck Overlays.

3.5.8.2.1 Prior to placing of concrete, the clean surface shall be thoroughly coated with bonding grout conforming to 2.8 herein.

3.5.8.2.1.1 Care shall be exercised to ensure that all prepared surface areas receive a thorough, even coating, and that no excess bonding grout be permitted to collect in pockets.

3.5.8.2.1.2 The grouting operation shall not advance more than 3 to 5 feet ahead of the placing of concrete, but not more than 10 minutes ahead of the finishing machine, unless otherwise directed. Concrete shall be placed while the slurry remains wet. Areas that have dried shall be thoroughly cleaned of all dry slurry and slurry shall be reapplied.

3.5.8.2.1.3 Bonding grout that has dried, or become unworkable, as determined by the Engineer, shall not be incorporated in the work. No tempering will be permitted.

3.5.8.2.2 Concrete placed in patches more than 1 inch deep shall be hand vibrated internally in addition to the surface vibration provided by the finishing machine.

3.5.8.2.3 At transverse and longitudinal joints, the overlay course previously placed shall be sawn to a straight and vertical edge before the adjacent overlay course is placed.

3.5.8.2.4 Bridge deck overlays shall not be placed when air or deck temperature is below 45 °F. Decks may be placed when these temperatures are 45 °F and rising temperature is predicted.

3.5.8.2.5 A construction dam or bulkhead shall be installed in case of major delay in the placement operation. During minor delays of one hour or less, the end of the placement may be protected from drying with several layers of wet burlap.

3.5.8.2.6 Adequate precautions shall be taken to protect freshly placed concrete from sudden or unexpected rain. The Engineer may order removal of any material damaged by rainfall.

3.5.8.2.7 When pumping concrete for decks, a sufficient number of pumps including standby units shall be available on site to insure uninterrupted concrete delivery to the placement area.

3.5.8.3 Consolidation of bridge deck overlays shall be performed after the concrete has been screeded by the use of a separate, variable-speed vibrating pan attached to the finishing machine. Vibration shall be continuous until consolidation is achieved and stopped before segregation occurs or water is forced to exterior surfaces in appreciable amounts.

3.5.8.3.1 Concrete shall not be placed at a rate greater than that which can be thoroughly consolidated by the vibrator in use.

3.5.8.3.2 Hand vibrators shall be used adjacent to curbing and expansion joints whenever the machine vibrators cannot reach the areas.

3.5.8.4 Curing of bridge deck overlays shall meet the requirements of 520.3.10.1 curing method “c”. At temperatures below 55 °F, the Engineer may require a longer curing period.

3.5.8.5 Bridges may be opened to automobile traffic only after an initial curing, provided the required curing period has elapsed for all previously placed concrete patches.

3.5.9 Box Culverts

3.5.9.1 Construction joints shown on the plans or permitted shall be perpendicular to the base slab and normal to the culvert axis. Weepers and drains shall comply with 3.3.

3.6 Joints.

3.6.1 General.

3.6.1.1 All joints not exposed to view in the final structure shall be waterproofed in accordance with Section 538 .

3.6.2 Construction and Contraction Joints.

3.6.2.1 Joints shown on the plans or permitted shall be keyed, doweled, or both as shown or directed. Sizes and spacing shall be as shown or ordered. Horizontal joints will not be permitted unless shown on the plans or occasioned by breakdown of plant or equipment in which case, in addition to joint specified in 3.5.3.1.3, planed lumber shall be inserted into the fresh concrete to produce a horizontal line in surfaces which will be exposed to view.

3.6.2.2 When fresh concrete is to be bonded to previously placed concrete, the abutting surface shall be abraded by sandblasting and cleaned by compressed air prior to coating with bonding agent.

3.6.2.3 Where bonding is not desired, the existing concrete shall be coated with an approved form release compound before the adjacent concrete is placed.

3.6.3 Expansion Joints.

3.6.3.1 Expansion joints shall be constructed at the locations shown and in conformity with the details shown on the plans or ordered.

3.6.3.2 Open joint shall be formed at the locations shown on the plans. Inserts shall be fabricated so as to permit removal without damage to the work.

3.7 Concreting in Cold Weather.

3.7.1 General.

3.7.1.1 When the average daily temperature falls below 35 degrees F for more than 1 day, protective measures shall be taken to prevent damage to the concrete from freezing. The Contractor shall submit his proposed protective methods for approval. Concrete shall be protected from freezing for a minimum of 5 days.

3.7.2 Insulation.

3.7.2.1 Insulation shall be an approved blanket, batt of board insulation with a thermal conductivity of less than 0.25 BTU per hour per square foot for a thermal gradient of 1 degree F per inch.

3.7.2.2 . Openings for thermometers shall be provided where ordered. See Figure 520- 1 for typical locations.

3.7.3 Housing and Heating

3.7.3.1 Housing for cold weather concreting shall consist of a framework covered with weathertight plastic or canvas and shall be large enough to completely enclose the work to be heated and to accommodate the heating required elements.

3.7.3.2 Heaters shall be of approved type and shall be furnished in sufficient quantity to maintain the required temperature without creating hot spots in the concrete.

3.7.4 Concrete

3.7.4.1 Concrete shall be brought to the required temperature by the use of heated mixing water or heated aggregates or both. The maximum allowable temperature of water shall be 160 degrees F and the maximum allowable temperature for aggregates shall be 100 degrees F. The heated water shall be added to the aggregates prior to the addition of the cement.

3.7.4.2 Concrete delivery temperature shall be 50 degrees F to 70 degrees F for sections 24 inches or less in thickness and 40 degrees F to 55 degrees F for sections thicker than 24 inches unless otherwise permitted.

3.7.4.3 If the air temperature and transporting distance prevent the delivery of the concrete at the required temperature without exceeding the maximum allowable temperature in 3.7.4.1, the placement shall be cancelled until such time as the requirements can be met.

3.7.4.4 Forms, reinforcing steel, existing concrete and all other materials which will be in contact with the fresh concrete shall be brought to a temperature of 50 degrees F and all frost shall be removed within the limits of the foundation prior to the placing of the concrete.

3.7.4.5 Concrete shall be placed in the forms as soon as possible after delivery and as rapidly as possible without exceeding form and tie capacities. Tarpaulins or other approved materials shall be used to cover the top openings in forms to prevent heat loss. Only that portion of the form required for placement shall be opened and the opening re-covered between trucks unless otherwise permitted.

3.7.4.6 Finishing shall be completed as rapidly as possible. On areas where Water Repellant from Section 534 is not used, liquid curing compound shall be applied to exposed surfaces immediately after finishing. After the concrete has set, plastic shall be placed over the exposed areas. When insulation is used, a covering of approved insulation or a layer of hay and a tarpaulin shall be placed over the plastic and secured in place.

3.7.4.7 The concrete temperature shall be maintained between 50 degrees F and 100 degrees F for the first 72 hours and between 40 degrees F and 100 degrees for the next 48 hours. The concrete shall then be permitted to cool at a rate not to exceed 1 degree F per hour until it reaches the atmospheric temperature.

3.7.4.8 During cold weather, cofferdams shall remain dewatered and the concrete kept from freezing for 24 hours following placing. After 24 hours, the contractor may allow the cofferdam to flood.

3.8 Concreting in Hot Weather.

3.8.1 General.

3.8.1.1 The Contractor shall maintain the plastic concrete below 85 degrees F. This may require the addition of ice to the mixing water, sprinkling the forms and reinforcing steel, scheduling the concrete placements for early morning or evening hours, or any other approved methods.

3.8.1.2 After placement, the concrete shall be maintained below 100 F by sunshades, windscreen, fog spray, wet burlap, or other approved methods.

3.8.1.3 If excess water demand or too rapid setting is anticipated, a water-reducing or retarding admixture may be added to the mix in the amounts ordered.

3.8.1.4 When daytime air temperatures exceed 85 degrees F, concrete temperature exceeds 80 degrees F, and in the opinion of the Engineer, satisfactory surface finish cannot be achieved, nighttime or early morning placement may be required. No additional compensation will be allowed for this work.

3.9 Finishing Plastic Concrete.

3.9.1 Surfaces Other Than Decks.

3.9.1.1 All upper horizontal surfaces such as the top of wings, bearing pedestals. and the like shall be finished by placing an excess of material in the forms and screeding off the excess after compaction. The surface shall then be finished by the use of wood, magnesium. cork, canvas, or steel floats as directed.

3.9.1.2 Catwalks shall receive a magnesium float finish.

3.9.1.3 Sidewalks shall receive a broom finish by lightly dragging a broom transversely across the finished concrete to roughen the surface unless otherwise directed. Surfaces beneath bridge rail posts, light pole bases, and the like shall not be broomed.

3.9.1.4 All finishing shall be performed by persons experienced in the use of finishing equipment.

3.9.2 Concrete Decks.

3.9.2.1 All concrete decks shall be finished by the use of approved, self-propelled finishing machines, capable of adjustment for crown and width, and capable of raising the screeds to clear the concrete when required unless specific written permission is given for an alternate method.

3.9.2.2 Screed rails shall be set and checked for the finishing machine to ride on. The rails shall have sufficient rigidity and support to prevent deflection. After the rails are set, the finishing machine shall be placed on the rails and operated over the entire deck as many times as necessary to assure the required depth of concrete and the proper clearances to the reinforcing steel prior to starting the placement.

3.9.2.3 The finishing machine shall follow closely behind the placing and consolidating operation and the placing and finishing operations shall be continuous. See 3.5.3.1.2.1.

3.9.2.4 All work behind the finishing machine shall be performed from work-bridges. Work-bridges shall have independent movement capability and shall not be attached to the finishing machine. Walking in the concrete behind the finishing machine will not be permitted.

3.9.2.5 The finished concrete shall have the required crown and grade and the surface shall not vary from either by more than 1/8 in. in 10 ft. (3 mm in 3 m). The surface shall have a concrete surface profile (CSP) of 5 or less in accordance with the International Concrete Repair Institute (ICRI) technical guideline for "Selecting and Specifying Concrete Surface Preparation for Sealers, Coatings, and Polymer Overlays" Guideline No. 03732. As soon as the bleeding has stopped or the sheen has started to disappear, the concrete shall be given a final surface finish by scraping or dragging with an approved float at least 3 ft. in length. The float shall be placed on the outer edge of the finished concrete and moved transversely the full width of the deck. The finished edge shall be parallel to centerline. Each subsequent pass shall lap the preceding pass by at least 1/2 the length of the float. Concrete decks that will be the final wearing surface shall receive a pan drag without a float finish. This shall be followed by a broom finish utilizing a broom specifically made for this purpose. Fabric impressions in the surface caused by the texture of water-retaining materials shall not be cause for rejection. Objectionable defects, such as sharp edges caused by cement cream lines or fabric creases, shall be removed by the Contractor.

3.10Curing Concrete.

3.10.1 All exposed surfaces of concrete, except Class F, Flowable Fill, shall be cured in accordance with the requirements of Table 520-6. All water used to wet cure concrete shall conform to 2.5.

Table 520- 6 Curing of Concrete

Type of Construction	Curing Method	Minimum Number of Days Before Membrane Application	
		Horizontal	Vertical
Bridge Decks, approach slabs and overlays	c	Per Section 538	Per Section 538
Concrete to be treated w/ Item 534	a		
All other, except Class F Flowable Fill	a or b	14	7

Cure Method "a" - Concrete shall be kept moist until it can support curing covers at which time it shall be completely covered with a vapor-proof barrier conforming to 2.6.2. Water shall be reapplied as necessary to keep the surface of the concrete wet for the entire 7 day cure period.

Cure Method “b”- Immediately after finishing, all exposed surfaces shall be treated with a liquid curing compound conforming to 2.6.3 at the rate of 1 gallon per 200 square feet (2 liters per 10 square meters) or by fog spray, sprinkling or ponding of water conforming to 2.5 or any combination of the above, when the weather permits. Within 24 hours of finishing, these surfaces shall be completely covered with a vapor-proof barrier conforming to 2.6.2 for the remainder of the 7 days.

Cure Method “c” - The surface shall receive a wet cure utilizing water retaining material for at least 7 days. Water retaining material shall be burlap conforming to 2.6.1, cotton mats conforming to 2.6.4 or other approved water retaining material. Water retaining material shall be kept wet for the entire seven days. Apply water retaining material in accordance with 3.10.2. During the first 24 hours, the water retaining material shall be kept continuously wet by means of an approved automatic sprinkling or wetting system. After 24 hours, the Contractor may cover the wet water retaining material with a 4 mil minimum white polyethylene film for the remainder of the curing period in lieu of using a sprinkling or wetting system although wetting under the polyethylene may be required.

3.10.2 Application of Water Retaining Curing Material.

3.10.2.1 Burlap shall be applied damp within 30 minutes after concrete has been finished.

3.10.2.2 Unsized cotton mats shall be applied dry within 10 minutes after concrete is finished and saturated immediately after. Care shall be exercised to ensure that the cotton

mats are weighted down adequately to provide continuous contact with the concrete surface.

3.10.2.3 Other approved water retaining curing material shall be applied in accordance with the manufacturer‟s recommendations and as approved by the Engineer.

3.11 Loading Concrete.

3.11.1 Removing Forms.

3.11.1.1 Unless otherwise permitted, load bearing forms may not be removed until concrete test cylinders have attained 80 percent of their minimum expected compressive strength. If not controlled by such tests, the following periods may be used as a guide: For deck slabs, centering, and falsework, 14 days; for all other parts, 3 days or as directed. Non-load bearing forms may be removed in order to finish the concrete surface following a minimum 24 hours cure time, when directed by the Engineer.

3.11.1.2 The provisions of 3.10 shall apply if forms are removed prior to completion of the curing period.

3.11.2 Loading Restrictions.

3.11.2.1 Nothing shall be placed on the concrete prior to the minimum time periods specified in Table 520- 7.

Table 520- 7 Concrete Loading

Type of Construction	Minimum Requirements before Loading after Placement of Concrete
Substructure concrete including footings	80% of design strength or 7 days
Box culvert base slabs	5 days
Superstructure concrete	80% of design strength for construction loads and 100% design strength for legal traffic loads

3.11.2.2 The peak particle velocity ground vibration limits adjacent to newly placed concrete as specified in 203.3.2.5.1.5 shall apply.

3.12 Finishing

3.12.1 General

3.12.1.1 Surface finishes shall be classified as follows:

Class 1, Ordinary Finish
Class 2, Rubbed Finish

3.12.1.2 Forms may be removed in accordance with 3.11.1.1. If the required curing period has not been completed for a surface being finished, only the portion of the surface actually being finished shall be exposed, and curing will be immediately re-established once the phase of finishing underway has been completed. All exposed concrete surfaces shall be given a Class 1, Ordinary Finish. If a Class 2 or other finish is required, it shall be as specified by the Plans, Supplemental Specifications, or Special Provisions for designated surfaces.

3.12.1.3 Class 1, Ordinary Finish. Fins and projections shall be removed from all surfaces except those which will not be exposed. On all exposed surfaces the cavities produced from ties, honeycomb spots, broken corners or edges, and all other holes and defects shall be thoroughly cleaned and saturated with water for not less than 3 hours. These areas shall then be carefully pointed and trued with mortar composed of the same brand of cement and fine aggregate mixed in proportions of the concrete being finished. Mortar used in pointing shall not be more than 1 hour old. The mortar patches shall be cured as specified in 3.10. All expansion joints in the completed work shall be carefully tooled and free of mortar. The joint fillers shall be left exposed for their full length with clean, true edges. Holes which will not be exposed may be filled with asphalt cement when permitted.

3.12.1.4 Class 2, Rubbed Finish. After removal of forms, holes and imperfections shall be filled with mortar conforming to 3.12.1.3. After the mortar has thoroughly set, the concrete shall be saturated with water for at least 3 hours. The surfaces shall then be rubbed with a medium coarse Carborundum stone and a small amount of mortar until all voids have been filled and all marks and projections have been removed and the surface is uniform. This surface shall be left until all concrete to be rubbed above it has been similarly treated.

3.12.1.4.1 After all concrete surfaces have received their initial rubbing, the next procedure shall consist of rubbing the concrete with a fine Carborundum stone and water until a smooth uniform texture is obtained.

3.12.1.4.2 The final procedure shall consist of rubbing the concrete with dry burlap to remove loose powder. Should the final surface be unsatisfactory, a repetition of the above procedures will be required. The final surface shall have been achieved by altering the original concrete surface; a surface coating of cementitious material which adds thickness to the original surface is not acceptable.

3.12.1.4.3 All shrinkage cracks shall be treated as directed by the Engineer.

Methods of Measurement

4.1 Concrete Class AAA, AA, A, B, T and F will be measured by the cubic yard unless otherwise indicated, and in accordance with the following:

4.1.1 Except as specified below, the volume will be computed to the nearest 0.1 of a cubic yard by the prismoidal method using the dimensions as shown on the plans or as ordered. No allowance or measurements will be made for materials not entering permanently into the work or those used without proper authorization. No deductions will be made for the volume of concrete displaced by steel reinforcement, structural steel, expansion joint materials, scuppers, weepers, conduits, or the tops of piles.

4.1.1.1 Concrete Class T will be measured to the neat lines as shown on the plans. Seals on ledge will be measured to the ledge limit ordered to be removed.

4.1.1.2 When the Engineer determines that it is impracticable to measure the volume by dimensions, the volume will be based on the actual yield as determined in the field in accordance with AASHTO T 121.

4.1.1.3 Concrete Class B, footings (on rock) will be measured to the form lines placed at the limits shown on the plans. All concrete class B, footings (on rock) where rock will not be removed shall be formed and measured in accordance with 4.1.1.2.

4.2 Concrete for bridge deck overlay will be measured by the cubic yard (cubic meter) to the nearest 0.1 cubic yard (cubic meter) based on surface area multiplied by the specified depth.

Basis of Payment

5.1 The accepted quantities of concrete class AAA, AA, A, B, T and F will be paid for at the contract price complete in place.

5.2 The cost of development and testing of alternate mix designs for concrete class F, flowable fill will be subsidiary to the item.

5.3 Foundation Seal.

5.3.1 Seals shown on the plans will be paid for at the contract unit price per cubic yard under Item 520.6.

5.3.2 Seals ordered, but not shown on the plans, will be paid for at the contract unit price per cubic yard for Class T concrete if Class T is included in the proposal.

5.3.3 Seals requested by the Contractor and permitted, but not deemed necessary, will not be paid for.

5.4 Waterproofing of construction joints shown on the plans or ordered will be paid for under Section 538 as noted.

5.5 Reinforcing steel will be paid for under Section 544.

5.6 Weepers and concrete admixtures will be subsidiary.

5.7 The accepted quantity of concrete for bridge deck overlay will be paid for at the Contract unit price per cubic yard complete in place.

5.7.1 Overlay materials rejected shall be removed and replaced by the Contractor at no additional cost to the Department.

5.7.2 Saw cutting concrete for bridge deck overlays as required by 3.5.8.2.3 shall be subsidiary.

Pay Items and Units, Section 520 -- Portland Cement Concrete :

520.__	Concrete Class __, _____	Cubic Yard
520.001	Concrete Class AAA	Cubic Yard
520.01	Concrete Class AA	Cubic Yard
520.02	Concrete Class AA, Above Footings	Cubic Yard
520.1	Concrete Class A	Cubic Yard
520.12	Concrete Class A, Above Footings	Cubic Yard
520.2	Concrete Class B	Cubic Yard
520.211	Concrete Class B, Footings (On Rock)	Cubic Yard
520.213	Concrete Class B, Footings (On Soil)	Cubic Yard
520.421	Concrete Class F, Flowable Fill, Excavatable	Cubic Yard
520.6	Concrete Class T, Foundation Seal	Cubic Yard
520.7	Concrete Bridge Deck	Cubic Yard

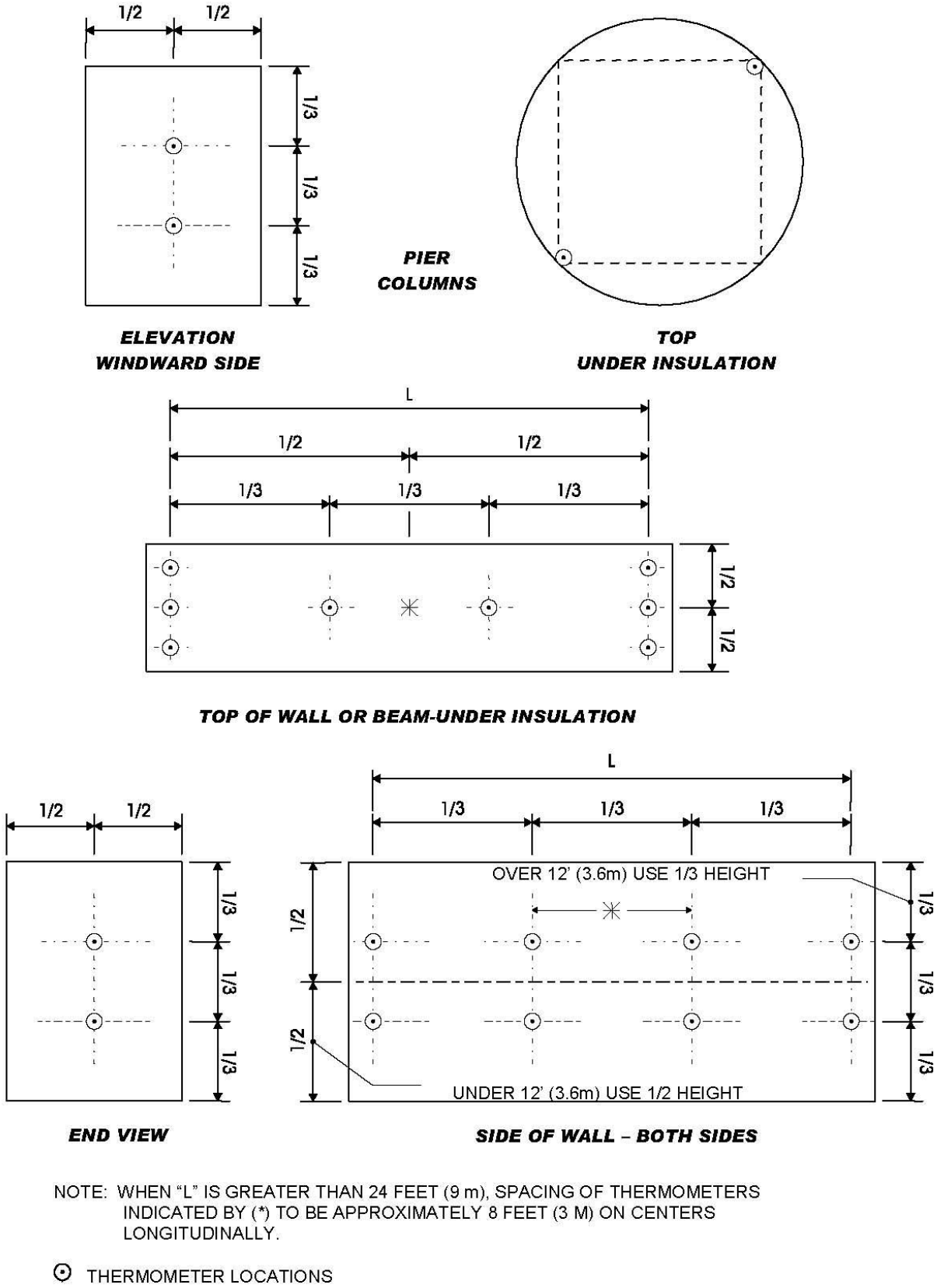

NOTE: WHEN "L" IS GREATER THAN 24 FEET (9 m), SPACING OF THERMOMETERS INDICATED BY (*) TO BE APPROXIMATELY 8 FEET (3 M) ON CENTERS LONGITUDINALLY.

⊙ THERMOMETER LOCATIONS

Figure 520- 1 Thermocouple Locations

SECTION 530 -- WATERPROOFING CONCRETE SURFACES

Description

1.1 This work shall consist of waterproofing concrete surfaces shown on the plans or ordered with two coats of a cement base waterproof coating for concrete.

Materials

2.1 All components of this system shall be compatible and shall be furnished by the same supplier.

2.2 All materials shall be delivered to the job site in sealed containers bearing the manufacturer's original labels.

2.3 The color when dry shall be a shade of gray matching the concrete.

2.4 Materials used for this specification shall be a product as included on the New Hampshire Department of Transportations Qualified Products List.

2.5 The mixture shall not contain calcium chloride or sodium chloride.

Construction Requirements

3.1 Preparation of Surfaces.

3.1.1 The concrete face to be coated shall be cleaned of all laitance, dirt, dust, oil, efflorescence, paint, and other foreign material by the use of sandblasting or waterblasting. Suitable traps shall be installed in sandblasting or waterblasting equipment to prevent oil from being deposited on the surface.

3.1.2 Surfaces which have been cured by the use of curing compound shall not be coated with waterproof finish until at least 30 days have elapsed since curing compound application.

3.2 Brush and Flat Waterproofed Finish

3.2.1 All work shall be performed by an experienced Contractor who is familiar with waterproofing work and with the materials specified herein.

3.2.2 No application is to be made when atmospheric temperature is 45 degrees F or below, or if it is expected to drop below 45 degrees F within 24 hours after application. Do not apply to frozen or frost-filled surfaces. If the application is made during hot weather, cool the surface with clean water first.

3.2.3 All materials shall be mixed according to the manufacturer's printed instructions and a copy of such instructions shall be maintained on the project.

3.2.4 The cement base waterproof coatings shall be applied by the use of a masonry brush to a slightly dampened surface. The material shall be cured in accordance with the manufacturer's recommendations. Sufficient material must be applied to fill and seal all pores and voids to achieve a uniform appearance.

3.2.5 The cement base, acrylic latex, coating shall be applied at the rate recommended by the manufacturer.

3.2.6 The cement base, polymer-modified, coating shall be applied at the rate recommended by the manufacturer.

3.2.7 Whenever construction or contraction joints appear in the existing or new concrete to be coated, the joints shall be tooled to allow bond breakage of the coating at the joint.

Method of Measurement

4.1 Waterproofing concrete surfaces will be measured by the square yard of concrete surface within the limits shown on the plans.

Basis of Payment

5.1 The accepted quantities of concrete surfaces waterproofed will be paid for at the Contract unit price per square yard complete in place.

Pay Items and Units, Section 530 -- Waterproofing Concrete Surfaces:

530.3	Waterproofing Concrete Surfaces	SY

SECTION 534 -- WATER REPELLENT

Description

1.1 A water repellent of the type specified shall be applied to the concrete surface shown on the plan or as ordered.

Materials

2.1 Water repellent (Silane/Siloxane) shall be a product as included on the New Hampshire Department of Transportation's Qualified Products List.

Construction Requirements

3.1 General. All caulking, patch, and joint sealers shall be installed prior to application of the water repellent. Concrete surfaces shall have cured a minimum of 14 days and shall be dry prior to the application of water repellent. Resin or wax base curing compound shall not be used on new concrete where sealers are to be applied.

3.1.1 All surfaces specified for treatment, which require finishing, shall be protected from freezing and de-icing chemicals until coated with water repellent. All finished surfaces specified for treatment must be treated before winter shutdown.

3.1.2 If the project schedule requires that surfaces be coated outside the product application temperatures listed, those surfaces shall be recoated during the next construction season with the same product when the application temperature is within the listed temperature range and other conditions meet manufacturer's recommendations during the next construction season. Prior to reapplication of water repellent, the surface shall be thoroughly cleaned by water blasting and allowed to dry.

3.2 Surfaces shall be free of dust, dirt, oil, wax, other coating efflorescence and other foreign materials. Sand or water blasting of the surface may be required to remove these substances.

3.2.1 The Contractor shall protect the concrete surface from rust staining. Any staining that does occur shall be removed by mopping with a solution containing 1lb of oxalic acid powder per gallon of water. After 2 or 3 hours, rinse the surface with clear water, scrubbing at the same time with a stiff brush. Tough stains may require a second treatment. If rust stains still persist, other means of removal may be allowed by the Engineer. Areas that had been coated with water repellant prior to removal of rust stains shall be recoated at the application rate specified in 3.3.

3.3 Silane-Siloxane. Water repellent (silane-siloxane) shall be applied at the rate recommended by the manufacturer.

3.3.1 A test application shall be performed on the surface to be treated, to insure compatibility, using the same equipment to be used on the project. After a minimum of three

days, the Engineer shall test for waterproof effectiveness by applying water to the surface. If the water beads up and is not readily absorbed, the test is positive.

3.3.2 Vertical surfaces shall have water repellent (silane-siloxane) applied in two applications, wet on wet, beginning at the bottom. After allowing the first application to penetrate the concrete surface approximately three to five minutes, apply second coat in the same manner. Less material will be required to saturate the surface on the second application. The combined application shall not exceed the rate specified above.

3.3.3 Water repellent (silane-siloxane) shall be applied only when the substrate surface temperature is 45 F and rising. Sealer shall be maintained between 65 F and 85 F during application. Do not apply when substrate surface temperature exceeds 85 F.

3.3.4 The Contractor shall follow the manufacturer's instructions in the method of preparation of the concrete and application of the sealer.

Method of Measurement

4.1 Water repellent (silane-siloxane) will be measured by the gallon complete in place. The reapplication of water repellent as required in 3.1.2 will be done at the Contractors expense unless the required reapplication was due to circumstances beyond the Contractors control, as determined by the Engineer.

Basis of Payment

5.1 The accepted quantity of water repellent will be paid at the contract unit price per gallon, complete in place.

5.2 Sand blasting or water blasting described herein shall be subsidiary

Pay Items and Units, Section 534 -- Water Repellent:

534.3	Water Repellent (Silane-Siloxane)	Gallon

SECTION 538 -- BARRIER MEMBRANE

Description

1.1 This work shall consist of furnishing and applying an approved waterproof membrane system as shown on the plans or as ordered.

1.2 When "Barrier Membrane, Heat Welded" or "Barrier Membrane, Heat Welded – Machine Method" is specified, the Contractor shall arrange for a manufacturer's representative (Representative) to be present at all times work is performed, including application of the primer and tack coat. The Representative shall also be present for placement of the hot bituminous pavement overlay. The Representative shall be readily identified by a photo ID badge, issued by the manufacturer that includes the manufacturer's name and logo, a current photograph of the Representative, the Representative's full name, and the word "Representative". The text of the badge shall be clearly printed in English. The Representative shall have the badge on his/her person and available for inspection at all times work is performed under this specification.

1.2.1 In performing work under this specification, the Contractor shall anticipate and provide for quality assurance testing and inspection by the Engineer or his/her authorized representatives.

1.2.2 When "Barrier Membrane, Heat Welded – Machine Method" is specified, the machine shall meet the requirements of 538.3.3.3.1.

Materials

2.1 Barrier membrane, Peel and Stick

2.1.1 **"**Barrier membrane, Peel and Stick" and "Barrier membrane, Peel and Stick – Vertical Surfaces" shall consist of adhesive primer, preformed waterproofing membrane sheet and mastic all as one system as included on the New Hampshire Department of Transportation's Qualified Products List.

2.2 Protection board shall be a product as included on the New Hampshire Department of Transportation's Qualified Products List.

2.3 Barrier Membrane, Heat Welded.

2.3.1 "Barrier Membrane, Heat Welded" shall consist of an approved prefabricated reinforcement of synthetic non-woven material, thoroughly impregnated and coated with SBS modified bitumen as included on the New Hampshire Department of Transportation's Qualified Products List. When machine method is specified, the membrane system shall be listed as such on the New Hampshire Department of Transportation's Qualified Products List.

2.3.2 The system shall include a primer that enhances the adhesive bond between the concrete deck and the membrane, and a tack coat that enhances the bond between the membrane and the hot bituminous pavement overlay, all as included on the New Hampshire Department of Transportation's Qualified Products List.

2.3.2.1 When approved in writing by the membrane manufacturer, a tack coat meeting the requirements of 410.2.1 may be used in lieu of the tack coat that is listed on the New Hampshire Department of Transportation's Qualified Products List.

2.3.3 Hot-applied rubberized asphalt for sealing the curb line shall be a product as included on the New Hampshire Department of Transportation's Qualified Products List.

Construction Requirements

3.1 General

3.1.1 **Concrete** shall be cured in accordance with the requirements of 520.3.10. The primer and membrane shall only be applied when the substrate surface has a moisture content of 6 percent or less, and when the temperature of the substrate exceeds the dew point by at least 5º F. The Contractor shall supply a portable electronic surface moisture meter capable of measuring the moisture content of concrete surfaces in percent. The moisture meter shall be a product that is listed on the New Hampshire Department of Transportation's Qualified Products List and shall be calibrated annually by the meter manufacturer. A certificate of calibration from the meter manufacturer shall accompany the moisture meter.

3.1.2 The air temperature and the substrate temperature shall be at least 40 ºF and rising.

3.2 Barrier Membrane – Peel and Stick

3.2.1 **Preparation of the surface**. The concrete surface shall have a uniform, fine-textured finish that is free of protrusions. All honeycombed areas and surface cavities shall be cleaned and filled with approved patching materials. The surface to be membraned shall be clean and free of laitance, oil and foreign materials.

3.2.2 **Application of adhesive primer.** Immediately prior to application of the primer, the surface shall be cleaned by brooms and compressed air. The concrete surface shall be inspected and approved by the Engineer prior to priming.

3.2.2.1 The adhesive primer shall be thoroughly mixed before use and applied by roller only and allowed to cure in accordance with the manufacturer's recommendations.

3.2.3 **Application of membrane.** Membrane shall be installed in a shingled pattern so that water is permitted to drain without accumulating against seams. The membrane shall be pressed or rolled into place to assure bond with the primed surface and elimination of air bubbles. Lap joints at the beginning and end of rolls shall be staggered with those of adjacent rolls and shall be sealed in accordance with the manufacturer's recommendation.

3.2.3.1 All expansion joints, areas around drains, all membrane junctions with curbs, end dams, protrusions, and all inside corners shall receive an extra 6 in. wide strip of preformed membrane prior to normal coverage.

3.2.3.2 Torn or damaged membrane shall be repaired in accordance with manufacturer's recommendations.

3.2.3.3 Membraned surfaces to be backfilled against, including horizontal surfaces of box culverts and rigid frames, shall be protected from rupture by a protection board as listed on the New Hampshire Department of Transportation's Qualified Products List.

3.3 Barrier Membrane – Heat Welded.

3.3.1 Preparation of the surface. The surface of the deck shall have a uniform fine-textured finish. In lieu of patching, surface cavities shall be ground to form a smooth transition across the deck surface as directed by the Engineer.

3.3.1.1 The entire deck shall be shot-blasted using self-contained, self-propelled equipment to achieve a consistent anchor profile that is free of sharp protrusions. Abrasive media shall consist of a blend of shot and grit sufficient to provide an angular surface profile that meets the requirements of 3.3.1.1.2. Areas that are not accessible to self-propelled shot blasting equipment, as determined by the Engineer, shall be blasted with appropriate equipment utilizing either mineral grit or steel grit and air pressure sufficient to achieve the specified surface profile.

3.3.1.1.1 Suitable traps shall be installed in shot-blasting equipment to prevent foreign substances from being deposited on the surface.

3.3.1.1.2 The Contractor shall provide a copy of Technical Guideline No. 03732, published by the International Concrete Repair Institute including the benchmark profile coupons. The final concrete surface profile shall be between CSP 3 and CSP 5 as defined by this Guideline.

3.3.1.2 Prior to primer application, the surface shall be clean and free of laitance, oil and foreign materials. Tightly adhered membrane residue, which cannot be removed by scraping using heavy pressure, may be left in place. All fabric reinforcement from previous membrane systems must be completely removed.

3.3.1.3 The concrete surface shall be inspected and approved by the Engineer and the Representative prior to priming.

3.3.1.4 The Contractor shall perform moisture testing of the deck surface using a Contractor-supplied portable electronic surface moisture meter as described in 3.1.1. Moisture tests shall be performed at locations determined by, and in the presence of, the Engineer. The primer shall only be applied when the moisture content of the substrate

surface is 6 percent or less and when the temperature of the substrate exceeds the dew point by at least 5º F. Special attention shall be given to assure that there is no moisture present at the interface between the deck and bridge curb. The Engineer may perform additional moisture testing of the substrate.

3.3.2 Application of adhesive primer. The handling of components shall be performed in a safe manner as per manufacturer's recommendations. Avoid the use of an open flame near freshly applied primer.

3.3.2.1 The primer and membrane shall be applied by a manufacturer certified applicator (Applicator). Applicators shall be individuals who have been thoroughly trained, by the manufacturer, in all aspects of application of the membrane system. Although an individual may be certified as both Applicator and Representative, the individual shall not serve in both capacities at the same time. Upon certification, the manufacturer shall issue a badge to the Applicator that includes the manufacturer's name and logo, a current photograph of the Applicator, the Applicator's full name, and the word "Applicator". The text of the badge shall be clearly printed in English. When machine method application is specified, the machine shall be operated by an Applicator who is certified to operate the machine. This certification shall be indicated on the Applicator's badge. The Applicator shall have the badge on his/her person and available for inspection at all times work is performed under this specification.

3.3.2.2 Immediately prior to application of the primer, the deck shall be cleaned by brooms and oil-free compressed air.

3.3.2.3 The primer shall be applied in one coat that thoroughly covers the entire surface to be membraned. The minimum primer application rate shall be 200 square feet per gallon The primer shall be applied by brush, roller or sprayer.

3.3.2.4 The primer shall cure tack-free before application of the waterproofing membrane. Additional priming may be required depending on the surface conditions and the time between priming and application of the membrane.

3.3.3 Membrane application The waterproofing membrane shall be heat welded onto the prepared substrate. Care shall be taken to assure that the membrane is completely bonded to the primed surface. The Contractor shall be responsible for protection of adjacent areas.

3.3.3.1 When machine method is specified, the machine shall be capable of handling rolls of at least 100 square yards. The machine shall be self-propelled and shall be capable of automatically following the edge of the previously placed membrane. To minimize end-of-roll joints, only one partial roll of membrane will be allowed per bridge deck phase.

3.3.3.2 Membrane shall be installed in a shingled pattern so that water is permitted to drain to the low areas of the deck without accumulating against seams. Laps shall be staggered at the beginning and ends of rolls and shall overlap the end of the previous roll

by at least 6”. Membrane shall overlap the side edge of adjacent rolls by at least 3”. All laps shall be completely heat-sealed.

3.3.3.3 Prior to suspension of work for any reason, all exposed edges shall be heated, troweled and sealed to assure that moisture cannot get under the membrane edge.

3.3.3.4 During application, a bead of melted bitumen should be visible at the leading edge and side edges of the membrane roll, providing a visual confirmation that all surface voids have been filled and the membrane is fully adhered to the substrate.

3.3.3.5 At the curb line, the membrane shall be heat-welded to within 1 in. of the curb. The curb shall be protected to prevent damage or permanent discoloring of the curb. The remaining area between the edge of the membrane and the curb, including the sloped fillet below the curb, shall be completely sealed with hot-applied rubberized asphalt material meeting the requirements of 2.3.3. The hot-applied rubberized asphalt material shall be applied so as to form a complete seal below the curb.

3.3.3.6 Damaged membrane and adhesion test locations shall be patched or repaired in accordance with manufacturer’s recommendations and with guidance from the Representative.

3.3.4 Application of tack coat. The membrane to be coated shall be clean and free from loose debris, moisture, or other contaminants. The Contractor shall take all necessary precautions to eliminate damage or contamination to the membrane system by vehicular traffic or by the spillage of gasoline, oil, diesel fuel, grease, hydraulic fluid or other deleterious substance. Contaminants shall be removed as per manufacturer’s recommendations and with guidance from the Representative. Any material damaged by contaminants or during cleaning shall be cut out and the damaged area repaired in accordance with 3.3.3.6.

3.3.4.1 Membrane surfaces that have been tacked shall be paved within 48 hours of application of the tack coat.

3.3.5 Application of hot bituminous overlay. The deck shall be paved within 3 days of membrane application unless otherwise permitted by the Engineer. The required laydown temperature of pavement overlays used in connection with torch applied barrier membrane shall be within the tolerances prescribed by the manufacturer. It should be noted that the laydown temperatures are extremely critical in order to preserve membrane integrity.

3.3.5.1 Prior to paving, any blisters found in the applied membrane shall be repaired with guidance from the Manufacturer’s Representative, as per manufacturer’s recommendations. Typical treatment may consist of puncturing the bubble with a torch-heated pick inserted at an approximate angle of 45 degrees. A similar treatment may be necessary if bubbles appear after application of the pavement base course.

Method of Measurement

4.1 Barrier membrane of the type specified will be measured by the square yard complete in place within the limits shown on the plans.

4.1.1 Repairs to the substrate or membrane system due to testing are subsidiary to the item and will not be measured.

Basis of Payment

5.1 Barrier membrane of the type specified shall be paid for at the Contract unit price per square yard complete in place in accordance with 108.01.

5.2 Protection board where required will be subsidiary.

5.3 Hot-applied rubberized asphalt for sealing the curb line shall be subsidiary.

Pay Items and Units, Section 538 -- Barrier Membrane:

538.1	Barrier Membrane, Peel and Stick	Square Yard
538.2	Barrier Membrane, Peel and Stick -Vertical Surfaces	Square Yard
538.5	Barrier Membrane, Heat Welded	Square Yard
538.6	Barrier Membrane, Heat Welded -Machine Method	Square Yard

SECTION 544 – REINFORCING STEEL

Description

1.1 This work shall consist of furnishing and placing reinforcing steel as shown on the plans or ordered.

1.2 Manufacturers of reinforcing steel must participate in, and maintain compliance with, the AASHTO National Transportation Product Evaluation Program (www.ntpep.org) that audits producers of reinforcing steel.

Materials

2.1 Bar reinforcement shall be Grade 60 or as shown on the plans.

2.1.1 Billet-steel bars shall conform to AASHTO M 31.

2.1.2 Rail-steel bars shall conform to AASHTO M 42.

2.2 Welded steel wire fabric shall conform to AASHTO M 55.

2.3 Bundled reinforcement shall be used only as shown on the plans or with written permission.

2.4 Foreign steel. The use of foreign steel will be permitted only after approval by the Engineer.

2.5 Epoxy Coated Reinforcing Steel.

2.5.1 Epoxy coated reinforcing steel shall meet the requirements of AASHTO M 284.

2.5.2 A written certification by the manufacturer of the powdered epoxy resin attesting to the AASHTO M 284 requirements shall be furnished for each lot to the Engineer by the Contractor.

2.5.2.1 The certificate shall also contain the insignia or other similar statement that the plant is a currently approved fusion-bonded epoxy coating applicator, as defined by the Concrete Reinforcing Steel Institute (CRSI) Plant certification Program.

2.5.3 The epoxy coating applied to the bars shall be uniform and smooth and shall provide a film thickness of 10 mils +/- 2 mils after curing.

2.5.4 All chair and bar supports used for the installation of epoxy coated reinforcing bars shall be epoxy-coated, vinyl-coated, or plastic-coated wire bar supports. Plastic slab bolster bar supports may be utilized for installing epoxy coated reinforcing bars. Continuous plastic bar supports between the top and bottom mats are not acceptable.

2.6 Synthetic Fiber Reinforcement

2.6.1 Synthetic fiber reinforcement shall be a product as included on the New Hampshire Department of Transportation Qualified Products List.

Construction Requirements

3.1 Bar List. The Highway Department's bar list and bending schedule is made for the purpose of arriving at an estimate of quantities. The Contractor shall verify the quantity, size, and shape of the bar reinforcement against the structure drawings and make the necessary corrections, if any, before ordering. Errors in the bar list and bending schedule shall not be cause for adjustment of contract unit price.

3.2 Surface condition of reinforcement. The reinforcing steel, at the time concrete is placed, shall be free of dirt, paint, oil, or other organic materials that may adversely affect or reduce bond. Metal reinforcement coated with firmly bonded rust, mill scale, or a combination of both shall be considered satisfactory provided the minimum dimensions and weight of a hand wire-brushed test specimen are not less than the applicable specification requirement. Rust or mill scale which is difficult to remove by vigorous scrubbing with a wire brush shall be considered firmly bonded to the steel.

3.3 Bending. Unless otherwise permitted, all reinforcing bars shall be bent cold. Bars partially embedded in concrete shall not be field bent except as shown on the plans or permitted. Only competent people shall be employed for cutting and bending, and proper appliances shall be provided for such work. Should the Engineer approve the application of heat for field bending reinforcing bars, precautions shall be taken to assure that the physical properties of the steel will not be materially altered.

3.4 Placing and fastening. Reinforcing steel shall be free from mortar and other objectionable substances hall be accurately placed as shown or ordered and shall be securely blocked and tied unless otherwise permitted. Blocking shall be by rust-resistant chairs unless otherwise permitted. Tack welding will be prohibited except upon special written approval of the Engineer. This provision also prohibits welding form ties to the reinforcement.

3.4.1 Reinforcing steel for bridge decks shall be epoxy coated unless otherwise shown on the plans. Bridge deck reinforcing steel shall be placed on epoxy or plastic-coated steel wire supports in accordance with 2.5.4 and the Concrete Reinforcing Steel Institute Manual of Standard Practice. The bottom reinforcing shall be supported on type SB supports with the end of the supporting wire lapped to lock the last legs of adjoining units. The top reinforcing shall be supported by type CHCU bar supports placed between the top and bottom mats. The ends of the top supporting wire shall be lapped. The supports shall be sized and spaced to allow for the minimum cover of the reinforcing bars called for on the plans. At least 50 percent of the junctions of the reinforcing mat shall be tied.

3.5 Splices. Reinforcing steel shall be furnished in the full lengths indicated on the plans unless otherwise permitted. Splices shall be made as shown on the plans or as permitted. No splices will be permitted at points where the section does not provide a minimum distance of 2 inches between the splices and the nearest adjacent bar or surface of the concrete. The bars shall be rigidly clamped or wired at all splices. Sheets of metal mesh shall overlap each other sufficiently to maintain uniform strength and shall be securely fastened at the ends and edges.

3.5.1 Splices made with mechanical connectors shall be as detailed on the plans or as permitted and shall develop at least 125% of the specified yield strength of the reinforcing bar being spliced. The minimum concrete cover over the reinforcing steel as shown on the plans shall be maintained at the mechanical splice.

3.5.1.1 The Contractor shall submit two mechanical connectors connecting two (12 in) sections of reinforcing steel of each size per lot per project. Connector and reinforcing steel assemblies will be tested by the Department.

3.6 Handling, fabrication, and repair of epoxy coated reinforcing steel shall be in conformance with the applicable sections of AASHTO M 284 and AASHTO M 317.

3.6.1 If stored outdoors, the bars shall be covered for protection against the elements and in such a manner that condensation does not form on the bars. The bars shall not be exposed to sunlight for periods exceeding two months.

3.7 Epoxy coated reinforcing steel which requires cutting shall be sawn. No flame-cutting will be allowed. Cut ends of bars shall be recoated with epoxy as soon as possible and before visible oxidation occurs.

Method of Measurement

4.1 Reinforcing steel of the type specified will be measured by the pound by computing the theoretical weights of the reinforcing steel placed as shown on the plans or ordered, based on the following table:

Table 544- 1 Reinforcing Steel Weights

Size Bar #	3	4	5	6	7	8	9	10	11	14	18
Lb. per Lin. Ft.	0.376	0.668	1.043	1.502	2.044	2.670	3.400	4.303	5.313	7.65	13.60

Basis of Payment

5.1 General. The accepted quantity of reinforcing steel of the type specified will be paid for at the contract unit price per pound complete in place. No allowance will be made for clips, wire,

or other material used for fastening reinforcement in place and no allowance will be made for additional splices or permitted substitutions.

5.1.1 For mechanical splice bars no allowance will be made in excess of the length detailed on the plans for the additional weight required to manufacture and provide a mechanical splice to the plan specifications.

5.2 Structural steel. In reinforced concrete structures that have no structural steel bid items, structural steel will be paid for at the unit price per pound bid for reinforcing steel, unless otherwise indicated in the contract.

Pay Items and Units, Section 544 – Reinforcing Steel:

544	Reinforcing Steel	Pound
544.11	Reinforcing Steel-Mechanical Connectors	Pound
544.2	Reinforcing Steel-Epoxy Coated	Pound
544.21	Reinforcing Steel-Epoxy Coated Mechanical Connectors	Pound
544.3	Reinforcing Steel	Unit
544.7	Synthetic Fiber Reinforcement	Pound

SECTION 570 -- STONE MASONRY

Description

1.1 This work shall consist of furnishing all materials and constructing masonry of approved stones, laid with or without cement mortar, as shown on the plans or ordered.

Materials

2.1 Stone shall be furnished in accordance with Table 570- 1.

Table 570- 1 Stone for Stone Masonry

Stone	Source	Quality	Dress and Cut	Finish	
				Top and Bottom	Vertical Face Joints
Ashlar	approved quarry having the required quantity	compact, hard and practically non-absorbent; texture and color as indicated on plans or ordered	to exact dimensions	fine	fine
Squared	approved quarry having the required quantity	compact, hard and practically non-absorbent; texture and color as indicated on plans or ordered	roughly squared and to approximate dimensions	rough for at least 12 in. depth	rough for at least 9 in. depth
Rubble	field quarry, or rock excavation	approved, sound, clean, and free from structural defects	unsquared, roughly dressed	--	--

2.1.1 Ashlar and Squared Stone.

2.1.1.1 Stones shall have their edges pitched to a true line with tops and bottoms parallel and cut to lie on their natural beds. The bottom beds shall be the full size of the stone and hollow beds or overhanging tops will not be permitted.

2.1.1.2 When specified as random or broken-ranged, stone shall have vertical joints unless otherwise indicated on the plans.

2.1.1.3 Size of stone shall be as indicated on the plans.

2.1.1.4 Surface finish shall be as shown on the plans in accordance with the following schedule:

(a) Smooth finished: surfaces in which the variations from the pitch line do not exceed 1/16 inch.
(b) Fine finished: surfaces in which the variations from the pitch line do not exceed 1/4 inch.
(c) Rough finished: surfaces in which the variations from the pitch line do not exceed 1/2 inch.
(d) Scabbled: surfaces in which the variations from the pitch line do not exceed 3/4 inch.
(e) Rock faced: surfaces on which there are no tool marks and which have irregular projection beyond the pitch line of not more than 1-1/4 inches.
(f) Weather-faced: surfaces which have been exposed to the weather for sufficient time to become weather beaten in appearance.
(g) Seam-faced: surfaces which are formed by seams in the natural ledge before stone is quarried.

2.1.1.5 All stone shall be so finished that no holes or portions of holes will show on surfaces which will be exposed in the finished work.

2.2 Cement mortar shall conform to Section 707 .

2.3 Stone masonry anchors shall be of the shapes and dimensions shown on the plans. The minimum ultimate tensile strength shall be 42,000 psi. Anchors shall be zinc-coated (galvanized) in accordance with ASTM A 653, coating designation G 90.

Construction Requirements

3.1 Classification.

3.1.1 Stone masonry shall be classified by pattern: ranged, broken ranged, or random.

(a) Ranged masonry shall be laid up in regular courses of uniform height throughout their entire lengths. When the height of courses is varied, it shall be regularly diminished from bottom to top masonry.
(b) Broken-ranged masonry shall be laid up with courses not continuous throughout their entire lengths.
(c) Random masonry shall be laid up without courses.

3.1.2 Stone masonry shall be classified by type of stone and thickness of joints, in accordance with Table 570-2.

Table 570- 2 Stone Masonry Classification

Class of Masonry	Type of Stone	Joint Material	Max. thickness (inches)
Ashlar	Ashlar	Cement mortar	1/2
Mortar Squared Stone	Squared	Cement mortar	1
Dry Squared Stone	Squared	Dry (closely and lightly pinned)	--
Mortar Rubble	Rubble	Cement mortar	1-1/2
Dry Rubble	Rubble	Dry (closely and lightly pinned)	--
Copings	Squared (sawn Finish)	Cement mortar	1/2

3.2 Laying Stone.

3.2.1 All shaping and dressing of stone shall be done before it is placed.

3.2.2 When required, the contractor shall submit details of falsework or centering for approval.

3.2.3 No stone in broken-ranged or random work shall be laid in a structure until at least 50 percent of the amount required for the structure has been delivered at the site.

3.2.4 Stone shall be carefully set without jarring stone already laid and shall be handled with a lewis or other suitable device which will not mar the stone. Rolling or turning of stone on masonry already in place will not be permitted.

3.2.5 Stone to be laid in cement mortar shall be thoroughly cleaned before being set, and the bed to receive it shall be well cleaned. The thickness of all joints and beds shall be uniform throughout. Spalls shall not be used as pinners in mortar beds or joints. When any stone is disturbed or mortar joint broken, the stone shall be taken up, and after all mortar has been cleaned from the stone, bed, and joints, it shall be reset in fresh mortar.

3.2.6 All stones shall be well bedded with the face joints properly pointed before the mortar has set, unless otherwise permitted. When permitted, joints to be pointed after mortar has set shall be raked out to a depth of 2 inches before mortar has set and when pointed, shall be moistened and filled with mortar well driven in. All pointing, shall be finished with an approved pointing tool to form the type of joint indicated on the plans or ordered.

3.2.7 The masonry shall be kept wet during the pointing and in hot or dry weather shall be protected from the sun and kept wet for a period of 3 days after completion unless otherwise permitted or ordered. The exposed surfaces of the stones shall not be smeared with mortar. The joints shall be wiped free of loose mortar. Stone shall not be set when containing frost or during freezing weather unless permitted. When permission is granted, the masonry shall be protected in the same manner as concrete in 520.3.7 except that liquid curing compound shall not be used, and the masonry temperature shall be controlled as provided in 520.3.7.4.7.

3.3 Bond

3.3.1 Stretchers shall have a depth of bed of not less than 1-1/2 times their height. They shall have a length not less than their height, nor less than 3 feet, nor more than 3-1/2 times their height, unless otherwise indicated on the plans.

3.3.2 Headers shall have a length of 1-1/2 times their height and shall extend entirely through masonry having a thickness of 4 feet or less. In masonry having a thickness greater than 4 feet, the depth of headers shall not be less than 2-1/2 times their height when the course is 18 inches or less in height, and not less than 4 feet in courses of greater height. Headers shall hold into the heart of the wall the same size shown on the face, bonding not less than 12 inches with the core or backing. Headers shall be placed over stretchers equally dividing the spaces between headers of adjoining courses with no joints coming immediately over or under headers. Headers shall be spaced not more than 8 feet apart, and there shall be at least 1 header to every 2 stretchers unless otherwise indicated on the plans.

3.4 Copings. Stone for copings shall be selected. Copings shall be as shown on the plans.

3.5 Cores and backing. Cores or backing shall be of stone or concrete masonry as indicated on the plans.

3.5.1 Stone backing shall be laid as specified for face stone, with headers interlocking with face headers when the thickness of the masonry permits. Stone in backing or cores shall break joints with the face stone and bond not less than 12 inches with the face stone and with each other. Stone backing or cores shall be carried up with face stone and at least 50 percent of the stone shall be of the same size and character as the face stone and shall have parallel ends. When stone is laid in cement mortar, the beds shall be full and shall not exceed 1 inch in thickness, and the joints shall be completely filled and shall not exceed 4 inches in thickness.

3.5.2 Concrete backing or cores shall be of the class shown on the plans and as specified in 520. The concrete shall be so worked and compacted that all spaces around stones are completely filled and an adequate bond with the stone is secured. Construction joints in the concrete, required by intermittent placing, shall be located not less than 6 inches below the top bed of any course of the stone facing. The concrete shall be so placed that the stone masonry facing is not disturbed.

3.6 Metal dowels and cramps. Dowels and cramps shall be of the material, size and shape, and located as indicated on the plans or ordered. Holes for dowels or cramps shall be drilled in the stones before they are placed unless otherwise permitted. Cramps shall be countersunk flush with the top of the stone in which they are set. This work shall be subsidiary.

3.7 Culvert headwalls and retaining walls. In addition to applicable construction requirements, unless otherwise specified on the plans or in the special provisions, culvert headwalls and retaining walls to be constructed of mortar rubble masonry or dry rubble masonry shall conform to the following requirements: At least 75 percent of the stone shall be larger than 6 inches x 9 inches x 12 inches. No dressing, finishing, or coursing will be required. The stone shall be set without disturbing stone already in place. Stone to be laid in mortar shall be clean and moist and shall be placed on a full mortar bed. The stones shall be bonded in a workmanlike manner.

3.8 Weepers. Unless otherwise indicated on the plans, the Contractor shall furnish and place 4 inch weepers in all closed abutments and retaining walls. These weepers shall be approximately 10 feet apart and placed at the elevation which will best drain backfill. French drains of stone or coarse gravel shall be placed adjacent to the fill face of such walls and at such elevations as will permit drainage to and outletting into the weepers.

3.9 Stone Masonry Arches.

3.9.1 Masonry for rings shall be ashlar or mortar squared stone unless otherwise indicated on the plans. Voussoirs shall be full size and shall have a bond of not less than the depth of the stones. Their beds shall be dressed to bring them to radial planes and to permit them to rest properly on the centering. The inside faces of stone backing or spandrel walls and extrados shall be given a finishing coat of 1:2-1/2 cement mortar trowelled smooth, and waterproofed as indicated on the plans.

3.9.2 Masonry in arch rings shall be placed in such a manner as to load the ring uniformly about the center or as indicated on the plans.

Method of Measurement

4.1 Stone masonry except copings will be measured by the cubic yard, to the nearest 0.1 of a cubic yard. The dimensions as shown on the plans or as ordered will be used in computing the stone masonry yardage for payment.

4.2 Stone coping will be measured by the linear foot, to the nearest 0.1 of a foot.

4.3 Resetting masonry wall will be measured by the cubic yard, to the nearest 0.1 of a cubic yard.

Basis of Payment

5.1 The accepted quantity of each class of stone masonry except copings will be paid for at the contract unit price per cubic yard complete in place, with the exception that masonry steps

including the parapet walls will be paid for at 1.5 times the contract unit price per cubic yard for the class of stone masonry involved.

5.2 The accepted quantity of stone coping will be paid for at the contract unit price per linear foot complete in place.

5.3 The accepted quantity of resetting masonry wall will be paid for at the Contract unit price per cubic yard complete in place.

Pay Items and Units, Section 570 -- Stone Masonry:

570.1	Ashlar Masonry	Cubic Yard
570.2	Mortar Squared Stone Masonry	Cubic Yard
570.3	Dry Squared Stone Masonry	Cubic Yard
570.4	Mortar Rubble Masonry	Cubic Yard
570.5	Dry Rubble Masonry	Cubic Yard
570.6	Stone Coping	Linear Foot
570.9	Resetting Masonry Wall	Cubic Foot

SECTION 572 -- STONE WALL

Description

1.1 This work shall consist of reconstructing stone walls where shown on the plans or as ordered.

Materials

2.1 Stone from the existing stone wall shall be utilized to reconstruct the wall at the specified location.

2.1.1 Any special stone features such as lintels, gate posts, copings markers, etc. shall be retained for resetting.

2.2 Any added stone shall conform to the type used in the original wall.

2.3 Gravel for surface preparation shall meet the requirements of Section 209.

Construction Requirements

3.1 The reconstructed stone wall shall match the existing wall as closely as possible.

3.1.1 The Contractor shall, by photographs and measurements acceptable to the Engineer, record the width, height and configuration of the existing wall prior to removal. These photographs and measurements along with the prevailing width, height and configuration shall be used to guide the reconstruction of the wall. These records shall be made at intervals of not more than 500 feet and at locations where characteristics of the wall change. The photographs shall become the property of the City at the end of the project.

3.1.2 When existing wall sections designated for reconstruction are in such disrepair that the original wall configuration cannot be determined, these sections shall be rebuilt to match abutting wall segments.

3.2 The stone wall reconstruction shall be supervised by a person with experience in dry masonry construction.

3.3 Care shall be taken to keep weathered faces exposed.

3.4 The Contractor shall retain all stone from existing wall for reuse. Additional stones that may be necessary shall be blended with the existing stones in order to reproduce the appearance of the existing wall.

3.5 The Contractor shall carefully replace chinking, blocking, bond stones and headers, as appropriate to the original style of wall, to ensure the maximum stability of the wall.

3.6 The Contractor shall carefully duplicate special features of the original wall, such as lintels, gate posts, openings, copings, markers, etc.

3.7 The ground surface shall be prepared by removing brush, vegetation, topsoil and unsuitable material. The area shall be rough graded to obtain a reasonably firm and level surface.

Method of Measurement

4.1 Reconstructing stone walls will be measured by the linear foot, to the nearest 1 foot, along the center line of the reconstructed wall.

4.2 Clearing and grubbing will be measured as provided in Section 201 .

4.3 Gravel required for surface preparation will be measured by the cubic yard, complete in place. Limits of gravel will be as shown on the plans, or as ordered.

Basis of Payment

5.1 The accepted quantity of reconstructed wall will be paid for at the contract unit price per linear foot complete in place.

5.1.1 Any additional stone required to complete the reconstruction will be subsidiary.

5.1.2 Reconstruction of special features as defined in 3.6 will be subsidiary.

5.1.3 Photographs and measurement records of the existing wall will be subsidiary.

5.2 Ground surface preparation will be subsidiary.

5.2.1 When special site preparation such as clearing and grubbing or gravel base courses are ordered, this work will be paid under appropriate items of the contract. If appropriate items are not included in the contract, this work will be paid as provided in 108.04.

Pay Items and Units, Section 572 -- Stone Wall:

572.1	Reconstructing Stone Wall, One Stone Wide	L.F.
572.2	Reconstructing Stone Wall, Multiple Stones Wide	L.F.
572.3	Reconstructing Stone Wall, Double Faced with Loose Fill	L.F.

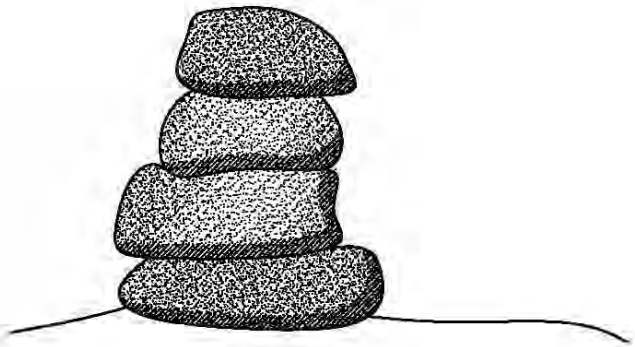

572.1

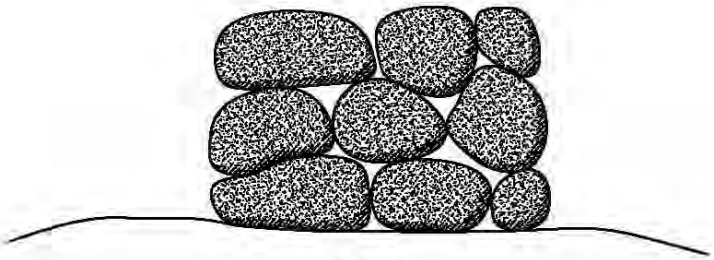

572.2

NOTE:
DEPICTIONS ARE FOR DESCRIPTION OF THE ITEMS AND NOT INTENDED TO BE USED FOR CONSTRUCTION DETAIL.

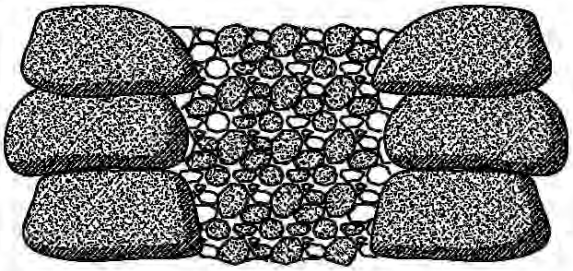

572.3

TYPICAL STONE WALL DETAILS

S:\DWG\DETAILS\572-1 STNWALL

NOT TO SCALE
FIGURE 572-1

SECTION 583 – RIPRAP

Description

1.1 This work shall consist of a protective covering of stone constructed at the locations shown on the plans or ordered.

Materials

2.1 Field stone, quarry stone, or rock fragments used for riprap shall be sound, of approved quality, and free from structural defects.

2.2 The suitable shape of the individual stones shall be angular to sub rounded, meeting the gradation in Table 583- 1 to create interlocking riprap to provide stability of the slope or channel. Round, thin and platy, elongated or needle-like shapes shall not be used.

2.2.1 The suitable riprap stone shape shall have the greatest dimension not greater than 2 times the least dimension.

2.2.2 Rock density shall be 165 pounds per cubic foot or greater.

2.2.3 The sources from which the stone is obtained shall be selected well in advance of the time when the material will be required in the field. The acceptability of the riprap stone shape and grading will be determined by the Engineer.

2.2.4 Control of the gradation will be completed by visual inspection approval by the Engineer of a stockpile at the quarry or other agreed site. Mechanical equipment as needed to assist in checking the stockpile gradation shall be provided by the Contractor. Stockpile replenishment will require reapproval.

2.3 Gravel blanket material shall conform to 209.2.1.4.2.

2.4 Geotextile shall conform to section 593

Table 583- 1 Riprap Gradation

Rock Size in inches			
Class	**Minimum**	**Maximum**	**Average d50**
1	1	7	4
2	1	9	6
3	1	14	9
4	2	18	12
5	2	23	15
6	3	27	18
7	3	32	21
8	4	36	24
9	4	45	30

Construction Requirements

3.1 Preparation of slopes. Slopes that will be covered by riprap shall be free of brush, trees, stumps, and other organic material and shall be graded to a smooth surface. All soft material shall be removed to the depth shown on the plans or as directed and replaced with approved material per 203.3.6. It is the Contractor's responsibility to protect embankments and excavated slopes from erosion during construction of the riprap covered slope.

3.2 Gravel blanket construction. When called for on the plans, the gravel blanket shall be placed on the prepared area to the specified thickness in one operation, using methods which will not cause segregation of particle sizes within the layer. The surface of the finished layer shall be even and free from mounds or windrows.

3.3 Geotextile placement. Geotextile shall be placed in accordance with Section 593

3.4 Riprap placement. Riprap shall be constructed to the dimensions shown on the plans or as directed by the Engineer.

3.4.1 Placement of riprap shall be conducted as soon as possible after gravel blanket or geotextile placement.

3.4.2 Placement of the riprap shall be started at the toe (key trench) and progress up the slope. The key trench at the bottom of the riprap shall be constructed as shown on the plans. If bedrock is encountered at the key trench it shall be brought to the attention of the Engineer to determine if modification to the riprap installation is needed.

3.4.3 Riprap shall be placed over geotextile by methods that do no stretch, tear, puncture or reposition the fabric. Riprap smaller than 1.5 cu. ft. in volume shall be placed with drop heights of less than 3 ft. to the placement surface. Riprap greater than 1.5 cu. ft. in volume shall be placed with no free fall height.

3.4.4 Equipment such as a clamshell, orange-peel bucket, skip or hydraulic excavator shall

be used to place the riprap so it is well distributed and there is no large accumulations of either the larger or smaller sizes of stone. Dump trucks or front-end loaders tracked or wheeled vehicles shall not be used since they can destroy the interlocking integrity of the stone when driven over previously placed riprap. Placing the riprap by end dumping on the slopes will cause segregation and will not be permitted.

3.4.5 The riprap shall be placed in a manner which produces a well-graded mass. The larger stones shall be well distributed and the entire mass of riprap shall conform approximately to the gradation specified. Hand placing or rearranging of individual stones by mechanical equipment may be required to the extent necessary to secure the uniformity of gradation and surface specified.

3.4.6 Fill voids between larger stones with small stones to ensure interlocking between the riprap.

3.4.7 After the riprap is in place, it shall be compacted by impacting (ramming) the exposed surface to produce a tight, locked surface, not varying more than 6” from the elevations shown on the plans.

3.4.8 Riprap placed in water requires close observation and increased quality control to ensure the required thickness, gradation and coverage is achieved

Method of Measurement

4.1 Riprap will be measured by the cubic yard and computed to the nearest 0.1 of a cubic yard by multiplying the actual area of the accepted and approved riprap by the nominal depth as shown or ordered.

Basis of Payment

5.1 The accepted quantity of riprap of the type specified will be paid for at the contract unit price per cubic yard complete in place.

5.2 Gravel blanket material specified or ordered will be paid for under Section 209.

5.3 Geotextiles specified or ordered will be paid for under Section 593

5.4 The accepted quantity of excavation required for placing riprap and for placing any underlying gravel blanket will be paid for under the item of excavation being performed. Excavation above refers only to excavation of original ground or to material ordered removed not shown on the plans.

5.5 Free borrow will not be required to replace the accepted quantity of stone obtained from the excavation. However, when the plans do not call for borrow, but the quantity of material removed from excavation for use under this item requires the Contractor to furnish borrow to complete the work, such borrow will be subsidiary.

5.6 Replacement slope material resulting from the requirements of 3.1 will be paid in accordance with 203.5.1.9

Pay Items and Units, Section 583 – Riprap:

583._	Riprap, Class_	Cubic Yard

SECTION 585 -- STONE FILL

Description

1.1 This work shall consist of furnishing and placing a dense stone fill at the locations shown on the plans or ordered.

Materials

2.1 Stone for stone fill shall be approved quarry stone, or broken rock of a hard, sound, and durable quality. The stones and spalls shall be so graded as to produce a dense fill with a minimum of voids.

2.1.1 Class A stone shall be irregular in shape with approximately 50 percent of the mass having a volume of 12 cubic feet, approximately 30 percent of the mass ranging between 3 and 12 cubic feet, approximately 10 percent of the mass ranging between 1 and 3 cubic feet, and the remainder of the mass composed of spalls.

2.1.2 Class B stone shall be irregular in shape with approximately 50 percent of the mass having a minimum volume of 3 cubic feet, approximately 40 percent of the mass ranging between 1 and 3 cubic feet, and the remainder of the mass composed of spalls.

2.1.3 Class C stone shall consist of clean, durable fragments of ledge rock of uniform quality, reasonably free from thin or elongated pieces. The stone shall be made from rock which is free from topsoil and other organic material. The stone shall be graded as follows:

Table 585- 1 Class C Stone Gradation

Sieve Size	Percentage by Weight Passing
12 inch	100
4 inch	50 - 90
1-1/2 inch	0 - 30
3/4 inch	0 - 10

2.1.4 Class D stone shall conform to 520.2.2.2.2.1, Table 520- 3 Coarse Aggregate Gradation, Standard Stone Size No. 467.

2.1.5 Spalls for filling voids shall be stones or broken rock ranging downward from a maximum size of 1 cubic foot.

2.2 Gravel blanket material shall conform to 209.2.1.4.2.

2.3 Geotextile shall conform to Section 593 .

Construction Requirements

3.1 Stones and spalls for stone fill shall be deposited and graded to eliminate voids and obtain a dense mass throughout the course. The spalls shall be tamped into place using an equipment bucket or other approved method.

3.1.1 When stone fill is placed on a slope, the stones shall be deposited in such a manner as to not unnecessarily dislodge the underlying material.

3.1.2 When stone fill is placed on a geotextile, it shall be deposited in such a manner so as to maintain the integrity of the geotextile.

3.2 When gravel blanket is shown or ordered, the gravel shall be placed in layers not exceeding 12 inches in depth unless otherwise ordered.

3.3 The completed surface shall approximate the lines and grades shown or ordered. When ordered, stone placed over 1 foot outside or above such lines and grades shall be removed.

Method of Measurement

4.1 Stone fill will be measured by the cubic yard and in accordance with 108.01.

Basis of Payment

5.1 The accepted quantity of stone fill of the class specified will be paid for at the contract unit price per cubic yard complete in place.

5.2 Gravel blanket material specified or ordered will be paid for under Section 209.

5.3 Geotextile specified or ordered will be paid under Section 593 .

5.4 The accepted quantity of excavation required for placing stone fill and for placing any underlying gravel blanket will be paid for under the item of excavation being performed. Excavation above refers only to excavation of original ground or to material ordered removed not shown on the plans.

5.5 Free borrow will not be required to replace the accepted quantity of stone obtained from the excavation. However, when the plans do not call for borrow, but the quantity of material removed from excavation for use under this item requires the Contractor to furnish borrow to complete the work, such borrow will be subsidiary.

Pay Items and Units, Section 585 -- Stone Fill:

585.1	Stone Fill, Class A	Cubic Yard
585.2	Stone Fill, Class B	Cubic Yard
585.3	Stone Fill, Class C	Cubic Yard
585.4	Stone Fill, Class D	Cubic Yard

SECTION 586 -- PLACING EXCAVATED ROCK

Description

1.1 This work shall consist of placing excavated rock in designated locations and to the thickness or shape shown on the plans or ordered.

Materials

2.1 The material shall be approved from excavation within the project or an off-site source.

Construction Requirements

3.1 The rock shall be close-packed and keyed together to be stable. The surface shall conform approximately to the specified lines and grades. Where ditches and channels are being lined or covered, the rock shall be left in such a position that the required waterway area is obtained. Rejected rock remaining outside of the lines and grades shown or ordered shall be removed. Fine grading will not be required.

Method of Measurement

4.1 Excavated rock placed under this item will be measured by the cubic yard.

Basis of Payment

5.1 The accepted quantity of excavated rock placed will be paid for at the contract unit price per cubic yard complete in place.

5.2 The accepted quantity of excavation required for placing excavated rock will be paid for under the item of excavation being performed. Excavation above refers only to excavation of original ground or to material ordered removed not shown on the plans.

Pay Items and Units, Section 586 -- Placing Excavated Rock:

586	Placing Excavated Rock	Cubic Yard
586.1	Placing Excavated Rock in Stockpiles	Cubic Yard
586.2	Placing Excavated Rock for Channel Protection	Cubic Yard
586.3	Placing Excavated Rock for Slope Protection	Cubic Yard
586.4	Placing Excavated Rock for Rock Lined Ditches	Cubic Yard

SECTION 593 – GEOTEXTILES

Description

1.1 This work shall consist of furnishing and installing geotextile fabric as shown on the plans or as ordered, including any labor and materials to anchor, splice, or repair the geotextile.

Materials

2.1 General. Geotextile shall be a product tested under the AASHTO National Transportation Product Evaluation Program (NTPEP) and included on the New Hampshire Department of Transportation Qualified Products List for the Application, Strength Class, and Structure specified.

2.1.1 All geotextile properties referenced in the specifications and certified by the Contractor, with the exception of Apparent Opening Size (AOS), shall be considered minimum average roll values in the weaker principal direction (i.e., the average test results for any sampled roll in a lot shall meet or exceed the minimum values specified). Values for AOS shall represent maximum average roll values.

2.1.2 Fibers used in the manufacture of geotextiles, and threads used in joining geotextiles by sewing, shall meet the requirements of Section 3.1 and Section A1.4.1 of AASHTO M 288.

2.1.3 Geotextile shall exhibit an ultraviolet stability (retained strength) of at least 50% after 500 hours of exposure, measured in accordance with ASTM D 4355.

2.2 Application. Following are the basic Applications of geotextile included under this specification. Applications are described according to their most common use(s) and may not include every function for which a geotextile is specified.

2.2.1 Application 1 – Subsurface Drainage. Geotextile for this Application consists of fabric placed against a soil to allow for long-term passage of water into a subsurface drain system while retaining the in situ soil.

2.2.2 Application 2 – Separation. Geotextile for this Application consists of fabric placed to prevent mixing of in situ or subgrade soil with aggregate cover materials.

2.2.3 Application 3 – Stabilization. Geotextile for this Application consists of fabric placed in wet, saturated conditions to provide the coincident functions of separation and filtration. This Application may also be specified for geotextiles used to provide the function of reinforcement

.

2.2.4 Application 4 – Permanent Erosion Control. Geotextile for this Application consists of fabric placed below riprap or other armor systems to prevent soil loss and/or instability of the erosion control system.

2.3 Strength Class. Following are the basic Strength Classes of geotextile included under this specification:

2.3.1 Class 1, Class 2, and Class 3. Geotextile specified as Class 1 (high strength), Class 2 (medium strength), or Class 3 (low strength) shall meet the applicable requirements of AASHTO M 288, Table 1, including sewn seam strength when sewn seams are used. A higher strength geotextile may be substituted for a lower strength geotextile provided all other specification requirements are met.

2.3.2 Class 0. Geotextile specified as Class 0 (extra high strength) shall meet the following minimum requirements:

Table 593- 1 Class 0 Geotextile Properties

Geotextile Property	Test Method	Property Requirement [lb]
Grab Tensile Strength	ASTM D 4632	375
Sewn Seam Strength	ASTM D 4632	335
Tear Strength	ASTM D 4533	135

2.4 Structure. The Contract Item Number for geotextile includes a designation for Structure that defines the basic composition of the fabric. Geotextile shall conform to the specified structure as identified by the Item Number.

2.5 Permittivity and Apparent Opening Size (AOS). Geotextile shall meet the following requirements for permittivity and Apparent Opening Size (AOS):

Table 593- 2 Required Geotextile Properties

Application	Application Required Geotextile Property	
	Permittivity Per ASTM D4491 (sec -1)	Apparent Opening Size (AOS) per ASTM D 4751 (mm)
1 -Subsurface Drainage	0.70 min.	0.22 max.
2 -Separation	0.05 min.	0.43 max.
3 -Stabilization	0.05 min.	0.43 max.
4 -Permanent Erosion Control	0.70 min.	0.22 max.

2.6 Each roll shall be clearly labeled so as to easily identify the product in the field. The label shall include as a minimum the manufacturer's name, product name and number, and the Contract Item name and number

.

2.7 Staples or Pins. Staples or pins required to hold the geotextile prior to placing overlying materials shall be those prescribed by the geotextile manufacturer.

Construction Requirements

3.1 Protection of Geotextile. To prevent damaging the fabric, the Contractor shall exercise necessary care while transporting, storing and installing the fabric. Prior to installation, the fabric shall be protected from weather, direct sunlight or other ultra-violet exposure, dust, mud, dirt, debris and other elements which may affect its performance. Fabric which is torn, punctured or otherwise damaged shall not be placed. After placement, fabric shall not be left uncovered for more than 5 days. Traffic or construction equipment will not be permitted directly on the geotextile.

3.2 Placement of Geotextile. The geotextile shall be placed in accordance with the plans, the manufacturer's requirements and the following:

3.2.1 General . Prior to placement of the fabric, the site shall be prepared to provide a smooth surface which is free from debris, obstructions, and depressions which could result in gaps, tears or punctures in the fabric during cover operations. The fabric shall be unrolled loosely and positioned as evenly as possible on the surface to eliminate wrinkles and folds.

3.2.1.1 Adjacent sheets shall be overlapped by a minimum of 18 inches. Sheets below water shall be overlapped by a minimu8m of 3 feet. Larger overlaps may be required by the Engineer if gaps between adjacent sheets occur during placement of overlying material. Successive lengths of fabric shall be placed in such a manner that the fill being placed will not be pushed below the fabric. Pins or staples may be used to anchor the fabric as directed by the Engineer. The fabric should be pinned in a loose condition so that it easily conforms to the ground surface.

3.2.1.2 Loose ends of the fabric shall be buried to prevent cavitation and subsequent erosion along the edges.

3.2.2 Subsurface Drainage. Trench excavation shall be done in accordance with details shown on the plans. In all instances, excavation shall be done in such a way so as to prevent large voids from occurring in the sides and bottom of the trench.

3.2.2.1 The geotextile shall be placed loosely with no wrinkles or folds, and with no void spaces between the geotextile and the ground surface. Successive sheets shall be shingled such that the upstream sheet is placed over the downstream sheet.

3.2.2.2 Placement of drainage aggregate shall proceed immediately following placement of the geotextile. The geotextile shall be covered with a minimum of 12 inches of loosely

placed aggregate prior to compaction. If a collector pipe is to be installed in the trench, a bedding layer of drainage aggregate shall be placed below the pipe, with t he remainder of the aggregate placed to the minimum required construction depth.

3.2.2.3 After placing the drainage aggregate, the geotextile shall be folded over the top of the aggregate in a manner that produces the overlap shown on the plans. In no case shall the minimum overlap be less than 12 inches.

3.2.3 Separation/Stabilization. The installation site shall be prepared by clearing, grubbing, and removal of vegetation and topsoil. The site shall be excavated or filled to the proper grade as shown on the plans or as ordered. The Engineer may order that soft spots and unsuitable areas identified during site preparation or subsequent proof rolling be excavated, backfilled, and compacted with suitable materials.

3.2.3.1 The geotextile shall be laid smooth without wrinkles or folds on the prepared subgrade, except that it may be folded or cut to conform to curves. Joints and overlaps shall be in the direction shown on the plans or as ordered by the Engineer. The folds or overlaps shall be held in place by pins, staples, or piles of fill or rock.

3.2.3.2 Overlying fill or aggregate materials shall be placed by end dumping onto the geotextile from the edge of the geotextile, or over previously placed materials. Construction vehicles shall not be allowed directly on the geotextile. Materials shall be placed such that at least the minimum specified lift thickness is between the geotextile and equipment tires or tracks at all times. Turning of vehicles shall not be allowed on the first lift above the geotextile.

3.2.3.2.1 On very soft subgrades, the fill or aggregate shall be spread to the proper lift thickness as soon as possible after dumping to minimize the potential of localized subgrade failure due to concentrated loading.

3.2.3.2.2 In stabilization applications, vibratory compaction equipment on the initial lift of fill or aggregate material may be prohibited by the Engineer to prevent damage to the geotextile.

3.2.3.3 Placement procedures that result in instability or damage to the geotextile shall be modified to eliminate further damage. The Engineer may order remedial measures such as increasing the initial lift thickness or decreasing equipment loads.

3.2.3.4 Geotextile placed below temporary fills shall be completely removed immediately after the fill is removed. Geotextile salvaged from use under temporary fills shall not be used for any permanent application in the project unless approved by the Engineer

3.2.4 Permanent Erosion Control. The geotextile shall be placed in intimate contact with the soils without wrinkles or folds, and anchored on a smooth graded surface approved by the Engineer. The geotextile shall be placed in such a manner that placement of the overlying materials will not excessively stretch or tear the geotextile. Anchoring of the terminal ends of

the geotextile shall be accomplished through the use of key trenches or aprons at the crest and toe of the slope as shown on the plans.

3.2.4.1 The geotextile shall be placed with the machine direction (long direction of the roll) parallel to the direction of water flow, which is normally parallel to the slope for erosion control runoff and wave action, and parallel to the stream or channel in the case of stream bank and channel protection. When overlapping, the fabric shall be placed such that the uphill sheet is placed over the downhill sheet, and the upstream sheet is placed over the downstream sheet. In cases where wave action or multidirectional flow is anticipated, all seams perpendicular to the direction of flow shall be sewn.

3.2.4.2 The armor system placement shall begin at the toe and proceed up the slope. Placement shall take place so as to avoid stretching, puncturing, and tearing of the geotextile. Particles smaller than 1.5 cubic feet shall be placed with drop heights less than 3 feet. Particles greater than 1.5 cubic feet shall be placed with no free fall. Drop heights exceeding the distance specified above may be allowed by the Engineer if field tests demonstrate that larger drop heights will not result in damage to the fabric. In no case shall stones be rolled or pushed onto the geotextile.

3.2.4.3 The geotextile and armor materials shall be placed the same day in underwater applications.

3.2.4.4 Field monitoring shall be performed to verify that the armor system placement does not damage the geotextile. Fabric which is damaged as a result of careless or improper placement of stone, grading techniques, or equipment traffic above the stone shall be repaired or replaced in accordance with 3.3

3.3 Repair of Geotextile. Fabric which is damaged after placement shall be replaced, repaired by stitching or patched. Patches shall be of the same materials as the placed geotextile. The patch shall be joined to the existing fabric using overlapped seams as directed by the Engineer.

3.3.1 The Contractor shall modify his placement or covering procedures to eliminate further or repeated damage from occurring.

3.4 Sewn Seams. Sew seams, if specified, ordered, or allowed, shall result in a joint at least as strong as the sewn seam strength requirements described in 2.3. Field or factory seaming will be permitted unless otherwise specified. Sewn seams shall be lapped a minimum of 4 inches and double sewn using Stitch Type 401 as depicted in ASTM D 6193. Either a "J" seam (Type SSn-2) or "Butterfly" seam (Type SSd-2) shall be used as shown in Figure 593- 1.

3.4.1 All seams shall be subject to the approval of the Engineer. Sewn seams shall be positioned on the exposed side of the fabric to allow for inspection and/or repair of the fabricated joint. Seams shall not be positioned as shown in Figure 593- 2.

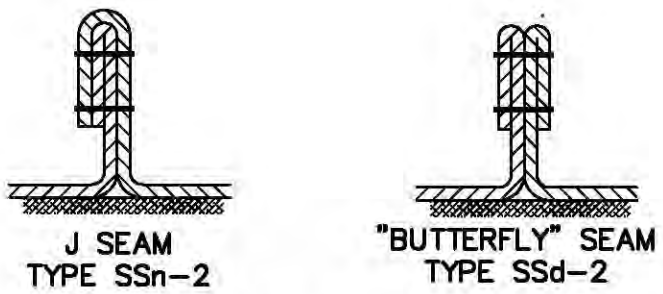

Figure 593- 1 Seam Repair Detail

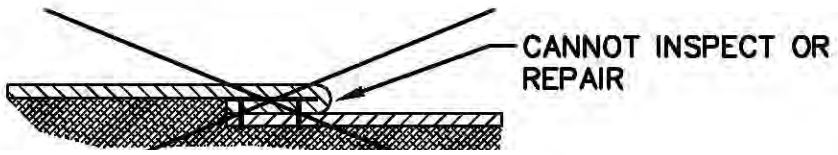

Figure 593- 2 Incorrect Seam Repair

Method of Measurement

4.1 Geotextile will be measured by the square yard as determined by actual surface measurements of the length of and width of area covered. Additional material used for overlaps, seams and repairs will not be measured.

Basis of Payment

5.1 The accepted quantity of geotextile will be paid for at the Contract unit price per square yard for the application, strength class, and structure specified, complete in place. The cost of all labor or materials used to anchor, splice, or repair the geotextile is considered subsidiary to the geotextile installation. Removal of temporary geotextile will be considered subsidiary to the geotextile installation.

Pay Items and Units, Section 593 – Geotextiles:

593 A B C Square Yard

A Application

1= Subsurface Drainage
2= Separation
3= Stabilization
4= Permanent Erosion Control

B Strength Class

0= Class 0
1= Class 1
2= Class 2
3= Class 3

C Structure

0= Contractor's Option
1= Nonwoven (Default for Applications 1 &4)
2= Monofilament, Woven
3= Silt Filament, Woven

Examples:

593.4.2.1 Geotextile for Stabilization, Class 2, Nonwoven
593.1.1.0 Geotextile for Subsurface Drainage, Class 1, Contractor's Option

DIVISION 600 – INCIDENTAL CONSTRUCTION

SECTION 601 -- SANITARY SEWERS

Description

1.1 This work shall consist of furnishing and installing sanitary sewer pipes at the locations shown or ordered, including all necessary joints, fittings and connections as required.

1.1.1 Sanitary sewers shall conform to the requirements New Hampshire Code of Administrative Rules, Env-Wq 700 "Standards of Design for Sewage and Wastewater Treatment Facilities" and as set forth in these specifications.

Materials

2.1 Reinforced Concrete Pipe, Circular.

2.1.1 Concrete pipe shall conform to the AWWA C302 standard in effect when the pipe was manufactured**.**

2.1.2 Pre-stressed concrete cylinder pipe and fittings shall conform to the AWWA C301 standard in effect when pipe was manufactured.

2.1.3 Individual sections of pipe may be rejected because of the following reasons:

a) Fracture or cracks passing through the wall, except for a single crack that does not exceed the depth of a joint.
b) Defects that indicate imperfect proportioning, mixing and molding.
c) Surface defects indicating honey-combed or open texture.
d) Damaged or cracked ends where such damage would prevent making a satisfactory joint.
e) Any continuous crack having a surface width of 0.01 inch or more and extending for a length of 12 inches or more, regardless of position in the wall of the pipe.
f) The exposure of any steel in the barrel or the outside of the pipe indicating the displacement of reinforcement. Steel exposed at the ends will not be cause for rejection if a satisfactory join can be made.

2.1.4 The following information shall be clearly marked on each section of pipe.

a) The pipe specification designation
b) The date of manufacture
c) The name or trademark of the manufacturer
d) Identification of plant

2.1.5 Concrete pipe shall be joined with an oil resistant elastomeric material certified by the manufacturer as conforming to the AWWA C301 standard in effect when pipe was manufactured.

2.2 Ductile Iron Pipe.

2.2.1 Ductile iron pipe and fittings shall conform to the following standards of the American Water Works Association:

a) AWWA C151 for ductile iron pipe, centrifugally cast in metal or sand lined molds, for water or other liquids;

b) AWWA C150 for thickness design of ductile iron pipe and with ASTM A 536 ductile iron castings.

2.2.2 Joints shall be mechanical type, push-on type, or ball-and-socket type.

2.2.3 The interior of all ductile iron pipe for sanitary sewer shall have a cement lining

2.2.3.1 The cement lining shall be to a double thickness and seal coated in accordance with ANSI Specification A21.4, Cement Mortar Lining for Cast-Iron and Fittings for Water.

2.2.4 The exterior of all ductile iron pipe for sanitary sewers shall have a bituminous coating in accordance with AWA C151 and ANSI A.21.4

2.2.5 All buried pipe and fittings shall be installed with polyethylene encasement to prevent contact between the pipe and any potential corrosive soils. Polyethylene encasement shall have a minimum thickness of 8 mils, lineal low density, flat tube virgin polyethylene film and meet or exceed the minimum standards established by A WW A CI0S, current edition. Acceptable manufacturers include Fulton or approved equal.

2.2.5.1 Polyethylene encasement shall meet minimum size requirements per TABLE 3 of section 2.15 of DIPRA's Installation Guide for Ductile Iron Pipe.

2.2.5.2 Test results from an independent testing agency shall be submitted to the Engineer certifying that the polyethylene encasement meets all criteria established by AWWA C105, current edition.

2.2.5.3 A 2-inch wide plastic adhesive tape, such as Calpico Vinyl, Polyken 900, or approved equal, shall be used for sealing seams, cuts, or tears in polyethylene encasement. Duct tape shall not be allowed.

2.2.5.4 The polyethylene film shall be marked showing trademark, year of manufacture, type of resin, specification conformance, applicable pipe size and a corrosion protection warning.

2.2.5.5 The polyethylene shall meet the following requirements:

Table 601- 1 Polyethylene Liner Properties

Property	Minimum Allowable Value	Test Specification
Tensile Strength	3,600 psi	ASTM D882
Elongation	800%	ASTM D882
Dielectric Strength	800 v/mil	ASTM D149
Impact Resistance	600 g	ASTM D1709-B
Propagation Tear Resistance	2550 gf	ASTM D1922

2.3 Plastic Pipe.

2.3.1 Gravity Sewer Pipe. Pipe and fittings shall comply with the standards listed in Table 601- 2:

Table 601- 2 Plastic Sewer Pipe

ASTM Standard	Generic Pipe Material	Sizes Approved
D3034	*PVC (solid wall)	4" through 15" (SDR 35)
F679	PVC (solid wall)	18" through 27" (T-1 & T-2)
F794	PVC (ribbed wall)	8" through 36"
F1760	PVC, recycled, non-pressure	All diameters

*PVC: poly vinyl chloride

2.3.1.1 Plastic sewer pipe shall have a pipe stiffness rating of at least 46 pounds per square inch at 5 percent pipe diameter deflection, as measured in accordance with ASTM D2412 during manufacturing.

2.3.1.2 Joint seals for PVC pipe shall be oil resistant compression rings of elastomeric material conforming to ASTM D3212 and shall be push-on, bell-and-spigot type.

2.3.1.3 Pipe and fittings for PVC gravity sewer pipe shall have a Standard Dimension Ratio (SDR) of 35 or greater in load carrying performance.

2.3.2 Force Main and Low Pressure Sewer. PVC pipe shall have a Standard Dimension Ratio (SDR) no higher than 26 and shall conform to ASTM D2241and ASTM 1785. HDPE pipe used for force mains and low pressure sewers shall conform to ASTM D3035.

2.3.2.1 Force mains shall be designed to withstand hydrostatic pressures of at least 2 ½ times the design total dynamic head.

2.4 Fittings.

2.4.5 Unless otherwise specified or ordered, tees, wyes and others special shapes shall be equal to the type, diameter, class and joint of pipe with which they are used.

2.5 Concrete for encasements and chimneys shall conform to the requirements for Class A (3000 psi) concrete as specified in Section 520.

2.6 Bedding and backfill shall conform to the requirements of Section 209.

Construction Requirements

3.1 Sanitary sewers shall be constructed according to the requirements of 603 3.1, 3.2, 3.3 and 3.4 except as follows:

3.1.1 General

3.1.1.1 Figure 601- 1to Figure 601- 6 and Figure 206- 1 to Figure 206- 4 have been made a part of these specifications for clarification.

3.1.1.2 Pipe shall be bedded in stone up to half of the pipe diameter. Bedding material shall conform to the Stone Bedding requirements of Section 209

3.1.1.3 Sand blanket material shall conform to Sand Blanket requirements of Section 209

3.1.1.3.1 A sand blanket shall be placed to a depth of 12 inches above the crown of the sewer pipe.

3.1.1.3.2 In lieu of the sand blanket specified, pipe bedding stone may be used to a thickness of 6 inches completely around the pipe.

3.1.1.4 Backfill material shall not contain rock over 6 inches in diameter

3.1.1.5 All pipe locations shall be marked using metal-impregnated marking tape or tracer wire that can be located using metal detection equipment.

3.1.1.6 Trenches for pipes with slopes over 8%, trenches with pipes below seasonal high ground water level, and trenches for pipes downstream of and within the hydraulic influence of waterways or wetlands shall have impervious trench dams constructed every 300 feet to prevent potential disturbance to pipe bedding and blanket materials

3.1.2 Plastic Pipe.

3.1.2.1 Special care shall be taken to ensure that the first two to three feet of backfill above the sand blanket over the pipe is placed carefully rather than dropped, so as to avoid damaging the pipe from impact during placement.

3.1.2.2 There shall be at least 30 inches of cover over the top of the pipe before the trench is wheel loaded. There shall be at least 48 inches of cover over the top of the pipe before mobile trench compactors of the hydro-hammer or impactor type are used.

3.1.2.3 All necessary precautions shall be taken to prevent flotation of the pipe in the trench.

3.1.2.4 The pipe shall not be driven down to the required grade by striking with a shovel handle, timber or other unyielding object.

3.1.2.5 Suitable devices shall be used to force the pipe units together. Care shall be taken not to split or otherwise damage the joints.

3.2 Connecting Sanitary Services

3.2.1 Sanitary services shall be installed according to the City of Manchester "Sewer Use Ordinance.

3.2.2 Service connections shall use a sanitary tee or wye fitting for all new sewer construction. Whenever practical, sanitary service connections shall be made at the same time as the new sewer line is constructed

3.2.3 Building connections shall have the sewer fitting set at 45° to provide a gradual slope entry to the sewer.

3.2.4 If the vertical drop between the existing service pipe and the new sanitary sewer is greater than twelve (12) feet, a chimney shall be constructed (see Figure 601- 6)

3.2.5 Abandoned sanitary service pipes shall be removed and disposed of or plugged and sealed watertight as ordered by the Engineer.

3.2.6 All joints shall be properly matched with the pipe materials use with appropriate flexible joint adaptors and couplings.

3.2.7 For existing sewers where fittings cannot be installed, saddle connections shall be used. Saddle joints shall be encased in concrete, unless otherwise ordered by the Engineer

3.2.8 Where the distance between the building and the sewer main is greater than 75 feet or changes direction vertically or horizontally a sewer service cleanout shall be provided, unless otherwise ordered by the Engineer.

3.2.9 Pressure sewer service connections shall have an isolation valve or curb stop valve installed at the property line. If a check valve is used at the property line, the valve shall be installed within a vault to facilitate maintenance.

3.2.10 Gas traps and/or grease traps may be required at the discretion of the Director of Public Works or the Director of Planning and Community Development. A detail of each is provided at the end of this section.

Testing

4.1 Gravity Sewer Lines

4.1.1 Leakage Testing. All new gravity sewers shall be tested for watertighness by the use of a low- pressure air test. There shall be no more than 1000 feet of untested sewer constructed at any time.

4.1.1.1 The rate of infiltration or exfiltration shall not be greater than 100 gallons per day per inch of pipe diameter per mile of pipe for sizes to 48 inches, and not greater than 200 gallons per day per inch of pipe diameter per mile for sizes over 48 inches.

4.1.1.2 Low pressure air testing for gravity sewer pipe shall be in conformance with Uni-Bell PVC Pipe Association Uni-B-6, “Low-Pressure Air Testing of Installed Sewer Pipe” (1998).

4.1.1.3 Sanitary Service Connections. All new service connections shall be capped and tested along with the main sewer line.

4.1.1.4 Table 601- 3and Table 601- 4 are provided at the end of this section as guidelines for testing sewer lines.

4.1.2 Deflection Testing. All plastic gravity sewer pipe shall be deflection tested not less than 30 days nor more than 90 days following installation.

4.1.2.1 The maximum allowable deflection of flexible sewer pipe shall be 5% of average inside diameter. Deflection shall be measured as the reduction in the vertical diameter of the pipe (diametrically). Deflection testing shall be performed on random manhole-to-manhole sections using either a mandrel (supplied or available from pipe supplier or manufacturer) through the pipeline on the basis of a "GO-NO-GO" condition or by an approved deflectometer. The test shall be conducted without mechanical pulling devices. If the mandrel does not pass through the pipeline, the entire section shall be excavated and relayed; and after backfilling and adequate compaction is assured, the pipeline shall be re-tested.

4.2 Force Mains and Low Pressure Sewers

4.2.1.1 Force mains and low pressure sewer lines shall be tested in accordance with section 4 of AWWA C600-05 "Installation of Cast Iron Water Mains", at a pressure equal to 150% of the design operating total dynamic head but at least 100 psi. A Table is provided at the end of this section as a guideline for testing.

Method of Measurement

5.1 Sewer pipes will be measured by the linear foot to the nearest 0.1 of a foot, according to type, size, class and depth, as the horizontal projection of the distance between manholes, from inside face of manhole walls, or inside face of manhole wall to end of stub or connection. Measurement shall be made along the central axis of the pipe.

5.1.1 The depth for measurement shall be determined as the vertical distance, to the nearest 1.0 foot, between the original ground and the flow line of the pipe as installed.

5.2 Sanitary service connections will be measured by the linear foot, to the nearest 0.1 of a foot, along the central axis of the pipe, from the point of connection with the specified fitting at the sewer line, manhole or chimney to the upstream end of the fitting connecting the new with the existing service line.

5.3 Drop connections will be measured by the vertical foot, to the nearest 0.1 of a foot, between the invert of the higher pipe entering the manhole and the invert of the 90 degree bend at the bottom of the manhole.

5.4 Service chimneys will be measured by the vertical foot to the nearest 0.1 of a foot, from the centerline of the sewer to the top of the uppermost wye connection.

5.5 Adjusting existing service connections to avoid a conflict and/or reconnect with sewer, will be measured as a unit per service connection adjusted.

5.6 Sewer service cleanouts shall be measured by the number of units installed. One cleanout shall be a unit.

Basis of Payment

6.1 The accepted quantities of sewer pipe will be paid for at the contract unit price per linear foot of the type, size, class and depth specified complete in place, which price shall constitute full compensation for excavation (except rock), backfill, bedding and furnishing all materials including fittings, tools, equipment, labor and incidentals needed to complete the work, including those necessary to test and inspect the sewer line.

6.2 The Contractor shall be paid the contract unit price per linear foot of service connection, complete in place which price shall constitute full compensation for excavation (except rock), backfill, bedding and furnishing all materials including wyes, tees, saddles, fittings, tools,

equipment, labor and incidentals needed to complete the work, including those necessary to test and inspect the sewer service line.

6.3 The Contractor shall be paid the contract unit price per each adjusted service connection, complete in place which price shall constitute full compensation for excavation (except rock), backfill, bedding and furnishing all materials, including fittings, tools, equipment, labor and incidentals needed to complete the work, including those necessary to test and inspect the sewer service line.

6.4 The Contractor shall be paid the contract unit price per vertical foot of chimney, complete in place which price shall constitute full compensation for furnishing all materials, including pipe, fittings, sand, concrete, tools, equipment and labor and incidentals needed to complete the work.

6.5 The Contractor shall be paid the contract unit price per vertical foot of drop connection, of the size, type and class specified, complete in place which price shall constitute full compensation for furnishing all materials, including pipe, fittings, concrete, tools, equipment, labor and incidentals needed to complete the work.

6.6 Temporary diversion of groundwater, including trenching or pumping directly from the trench shall be subsidiary to the pipe installation. When well points or other specific dewatering devices are required or ordered, they will be paid as shown or as extra work.

6.7 Temporary diversion of sewer flows shall be subsidiary to pipe installation.

6.8 The accepted quantities of sewer service cleanouts will be paid for at the contract unit price for each, complete in place, which price shall constitute full compensation for excavation, backfill and furnishing all materials, tools, equipment, labor and incidental needed to complete the work.

Pay Items and Units, Section 601 -- Sanitary Sewers

Item Number							
601	A	B	C	D	E	Item Number	Unit
601						Section Number	
	.A					Material	
		B				Class, thickness or other	
			C			Depth range	
				D	E	Diameter	
	.0		Reinforced Concrete Pipe (Circular)				Linear Foot
		B	Class				
		2	Class II				
		3	Class III				
		4	Class IV				
		5	Class V				
	.1		Reinforced Concrete Pipe (Arch)				Linear Foot
		B	Class				
		2	Class II				
		3	Class III				
		4	Class IV				
		5	Class V				
	.2		Ductile Iron				Linear Foot
		B	ANSI Thickness Class				
		1	51				
		2	52				
		3	53				
		4	54				
		5	55				
		6	56				
	.3		Plastic Pipe (PVC)				Linear Foot
		1	SDR 26				
		2	SDR 35				
	.4		Plastic Pipe (PVC Recycled)				
		1	SDR 26				
		2	SDR 35				

C Depth Range
1 0-10 feet
2 10-15 feet
3 15-20 feet
4 Over 20 feet

All Items to Read:
"...'Including Excavation, Bedding and Backfill'"

Examples:

601.04118 18" Reinforced Concrete Sewer Pipe, Class IV (0'-10'Deep)
601.25118 18" Ductile Iron Pipe, Class 55 (0'-10' Deep)
601.32118 18" PVC Pipe, SDR 35 (0'-10' Deep)

Additional Pay Items and Units:

601.4	Inside Drop Connection	Vertical Foot
601.5	Sanitary Service Connection	Linear Foot
601.6	Adjusting Existing Sanitary Service Connection	Each
601.7	Service Chimney	Vertical Foot
601.8	Saddle	Each
601.81	Concrete Encased Saddles	Each
601.9	Sanitary Service Cleanout	Each

Table 601- 3 Hydrostatic Testing Table For Force Mains And Low Pressure Sewers
In accordance with AWWA C600-05

Allowable Leakage per 1000 ft of Pipeline*-gph

	Nominal pipe Diameter (Inches)								
P#**	2	3	4	5	6	8	12	14	16
450	0.32	0.48	0.64	0.80	.96	1.27	1.91	2.23	2.55
400	0.30	0.45	0.60	0.75	0.90	1.20	1.80	2.10	2.40
350	0.28	0.42	0.56	0.70	0.84	1.12	1.69	1.97	2.25
300	0.26	0.39	0.52	0.65	0.78	1.04	1.56	1.82	2.08
275	0.25	0.37	0.50	0.62	0.75	1.00	1.49	1.74	1.99
250	0.24	0.36	0.47	0.59	0.71	0.95	1.42	1.66	1.90
200	0.21	0.32	0.43	0.53	0.64	0.85	1.28	1.48	1.70
175	0.20	0.30	0.40	0.50	0.59	0.80	1.19	1.39	1.59
150	0.19	0.28	0.37	0.46	0.55	0.74	1.10	1.29	1.47
125	0.17	0.25	0.34	0.42	0.50	0.67	1.01	1.18	1.34
100	0.15	0.23	0.30	0.38	0.45	0.60	0.90	1.05	1.20

Values shown are based on following formula:

$$L = \frac{S*D*(P)^{0.5}}{133200}$$

L= allowable leakage (gph)
S= length of pipe tested (ft)
D= nominal diameter of pipe tested (in)
P= average test pressure, in psi (gauge)

*For pipe with 18 ft nominal lengths. To obtain the recommended allowable leakage for pipe with 20 ft nominal lengths, multiply the leakage calculated from the table by 0.9. If the pipeline under test contains sections of various diameters, the allowable leakage will be the sum of the computed leakage for each size.

** #P = Average Test Pressure, psi.

LOW PRESSURE AIR TEST FOR SANITARY SEWERS

Introduction

Numerous laboratory and field air tests have been devised over the years since the early 1960's. Much of the information contained in these tests was utilized by and the Uni-Bell PVC Pipe Association Uni-B-6 specifications

Described below is the procedure for air testing sewer lines to demonstrate the integrity of the installed material and the construction methods.

Summary of Method

The section of the sewer line to be tested is plugged. Low-pressure air is introduced into the plugged line. The amount and rate of air loss is used to determine the acceptability of the section being tested.

Preparation of the Sewer Line

Flush and clean the sewer line prior to testing, thus serving to wet the pipe surface as well as clean out any debris. A wetted interior pipe surface will produce more consistent results. Plug all pipe outlets to resist the test pressure. Give special attention to plugs.

Procedures

Determine the test duration for the section under testing by computation from the applicable equations in the appropriate specifications, or from prepared air test tables. The pressure-holding time is based on an average holding pressure of 3 psi (21 kPa) gage or a drop from 3.5 psi (24 kPa) to 2.5 psi (17 kPa) gage.

Add air until the internal air pressure of the sewer line is raised to approximately 4.0 psi (28 kPa) gage. After an internal pressure of approximately 4.0 psig is obtained, allow time for the air pressure to stabilize. The pressure will normally show some drop until the temperature of the air in the test section stabilizes.

When the pressure has stabilized and is at or above the starting test pressure of 3.5 psi (24 kPa) gage, commence the test. Before starting the test, the pressure may be allowed to drop to 3.5 psig. Record the drop in pressure for the test period. If the pressure has dropped more than 1.0 psi (7 kPa) gage during the test period, the line is presumed to have failed, the test may be discontinued when the prescribed test time has been completed even though the 1.0 psig drop has not occurred.

The test procedure may be used as a presumptive test which enables the installer to backfill and subsequent construction activities.

Safety

The air test may be dangerous if, because of lack of understanding or carelessness, a line is improperly prepared.

It is extremely important that the various plugs be installed and braced in such a way as to prevent blowouts. Inasmuch as a force of 250lbf (112 N) is exerted on an 8-in. (203-mm) plug by an internal pipe pressure of 5 psi (34 kPa), it should be realized that sudden expulsion of an improperly installed plug could cause serious personal injury.

As a safety precaution, pressurizing equipment may include a regulator or relief valve set at perhaps 10 psi (69 kPa) to avoid over-pressurizing and damaging an otherwise acceptable line. No one shall be allowed in the manholes during testing.

Table

The attached air test table (Table 601- 4) has been prepared utilizing applicable equations from Uni-B-6 specifications. It is based on an allowable air loss of 0.0015 $ft^3/min\text{-}ft^2$ of internal pipe surface. It applies when testing one pipe diameter only and for convenience ignores 4" and 6" insignificant differences in test time.

Table 601- 4 Low Pressure Air Test Table

Based on equations from Uni-B-6
SPECIFICATION TIME (MIN:SEC) REQUIRED FOR PRESSURE DROP

Test Pressure in psi shall be calculated using the following equation:

P=3.5+ (H/2.31)

P = Test Pressure (9 psi max)
H = Height (ft) of groundwater above invert

Minimum holding time required for the 1.0 psig maximum drop pressure shall be calculated using the following chart.

Pipe Dia (in)	Minimum Time (min:sec)	Length for Min. Time (ft)	Time for Longer Length (sec)	Time (min:sec) for Length (L) shown					
				100 ft	150 ft	200 ft	250 ft	300ft	350 ft
4	3:46	597	.380 L	3:46	3:46	3:46	3:46	3:46	3:46
6	5:40	398	.854 L	5:40	5:40	5:40	5:40	5:40	5:40
8	7:34	298	1.520 L	7:34	7:34	7:34	7:34	7:36	8:52
10	9:26	239	2.374 L	9:26	9:26	9:26	9:53	11:52	12:14
12	11:20	199	3.418 L	11:20	11:20	11:24	14:15	17:05	19:56
15	14:10	159	5.342 L	14:10	14:10	17:48	22:15	26:42	31:09
18	17:00	133	7.692 L	17:00	19:13	25:38	32:03	38:27	44:52
21	19:50	114	10.470 L	19:50	26:10	34:54	43:37	52:21	61:00
24	22:40	99	13.674 L	22:47	34:11	45:34	56:58	68:22	79:46
27	25:30	88	17.306 L	28:51	43:16	57:41	72:07	86:32	100:57
30	28:20	80	21.366 L	35:37	53:25	71:13	89:02	106:50	124:38
33	31:10	72	25.852 L	43:05	64:38	86:10	107:43	129:16	150:43
36	34:00	66	30.768 L	51:17	76:55	102:34	128:12	153:50	179:29

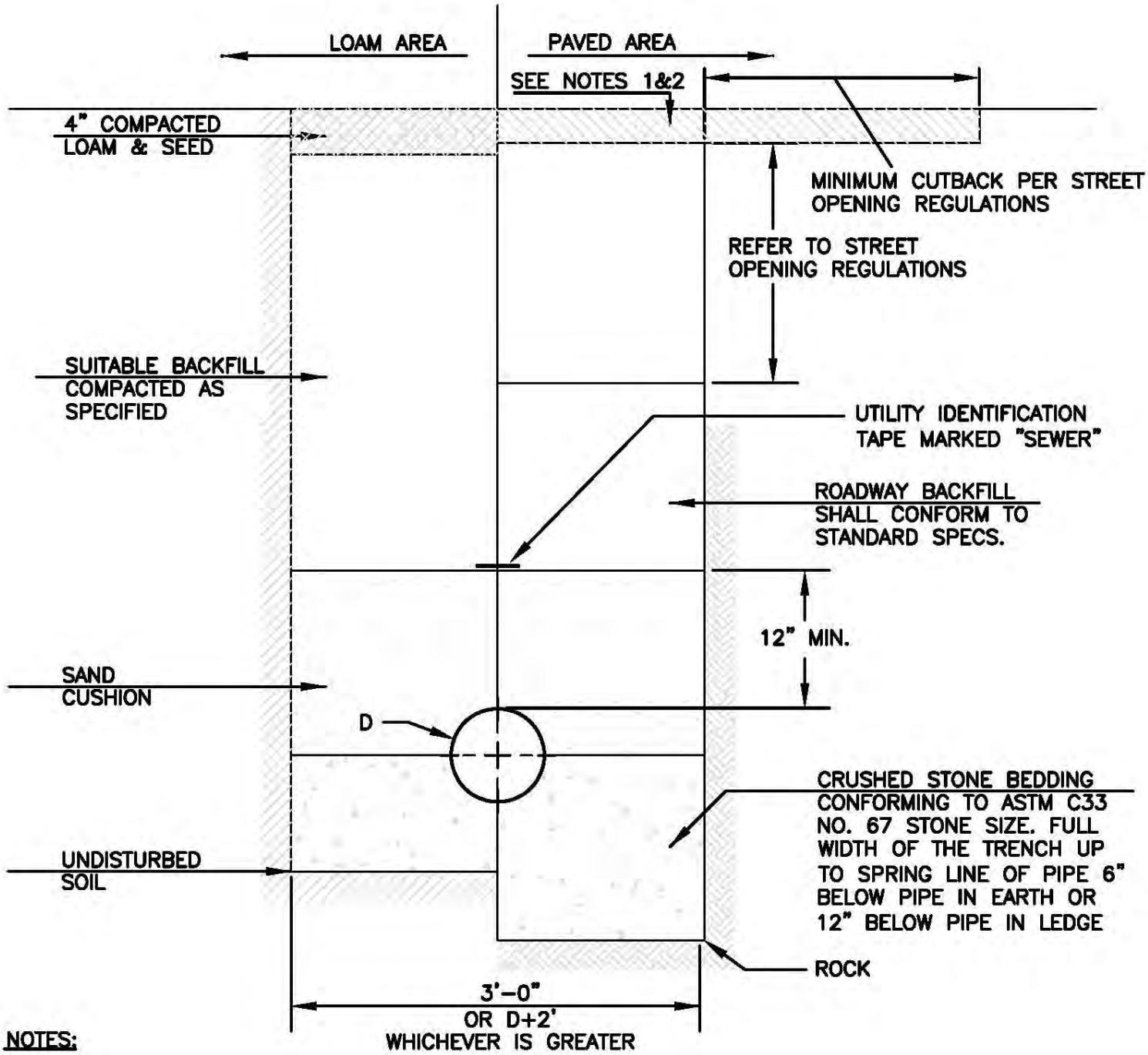

NOTES:

1.) PAVEMENT REPAIR IN EXISTING ROADWAYS SHALL CONFORM TO STREET OPENING REGULATIONS. DEPTH FOR BITUMINOUS PAVEMENT SHALL BE EQUAL TO EXISTING PAVEMENT WITH 4" MINIMUM. (1.5" WEARING, 2.5" BASE).

2.) NEW ROADWAY CONSTRUCTION SHALL CONFORM TO SUBDIVISION SPECIFICATIONS.

3.) MATERIAL SHALL BE REPLACED IN KIND WHENEVER POSSIBLE.

TYPICAL SEWER TRENCH DETAIL

S:\DWG\DETAILS\601-1 Swtrnch.dwg

NOT TO SCALE

FIGURE 601-1

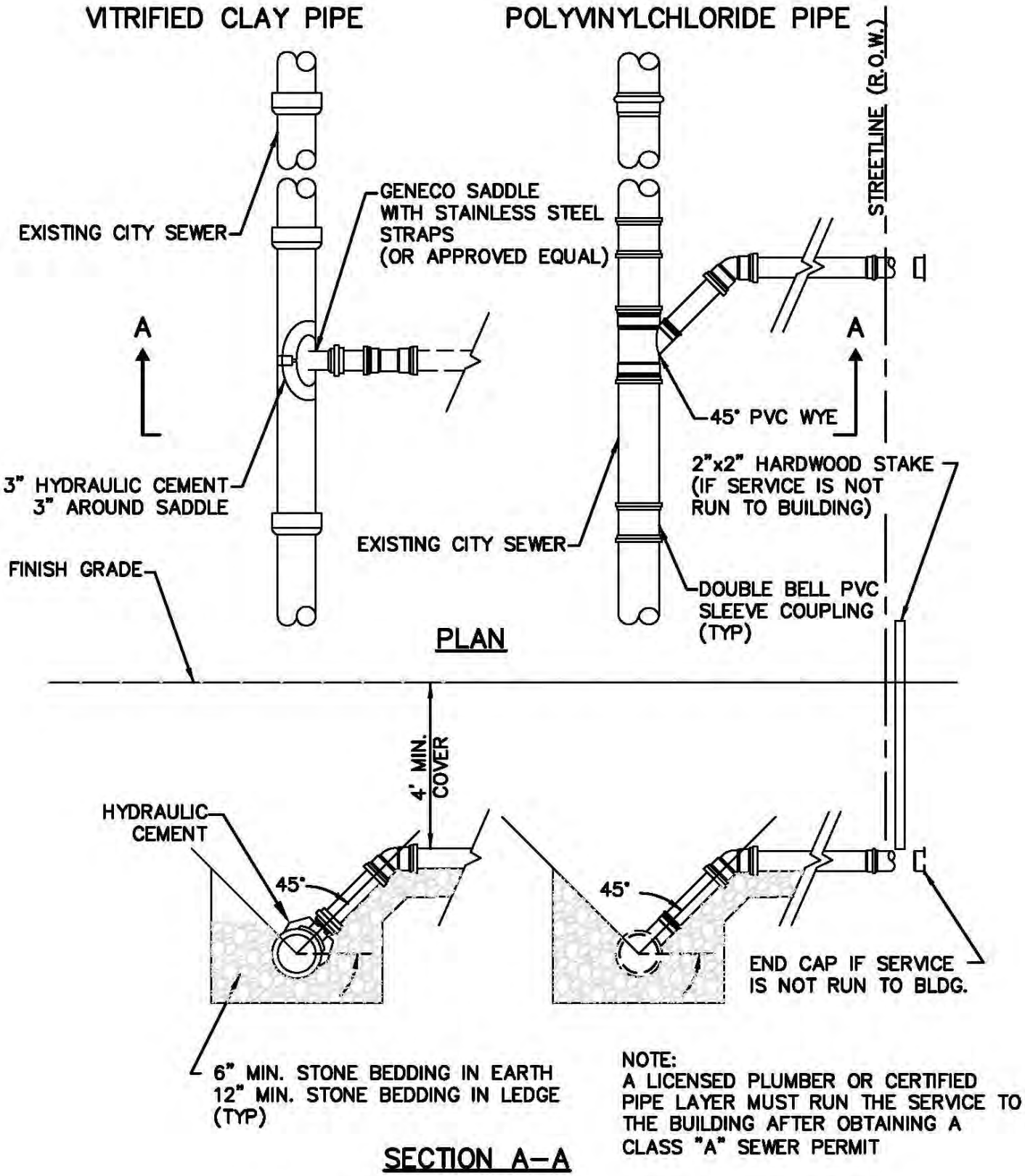

NOTE:
A LICENSED PLUMBER OR CERTIFIED PIPE LAYER MUST RUN THE SERVICE TO THE BUILDING AFTER OBTAINING A CLASS "A" SEWER PERMIT

TYPICAL SEWER CONNECTION (TYING INTO EXISTING MAINS)

S:\DWG\DETAILS\601-2 SWRCON.DWG

NOT TO SCALE

FIGURE 601-2

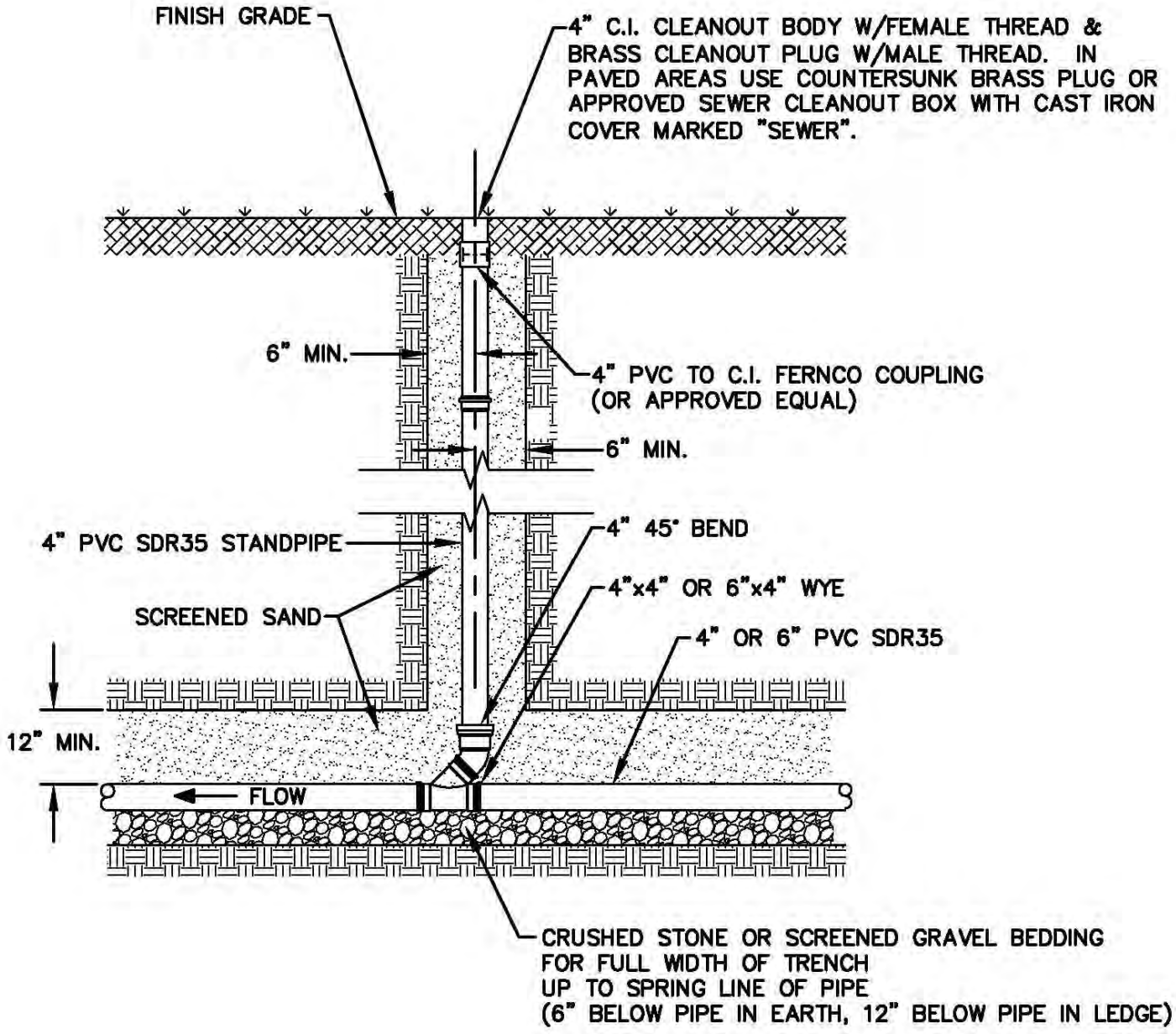

TYPICAL SEWER SERVICE CLEANOUT

S:\DWG\DETAILS\601-3 CLEANOUT.DWG

NOT TO SCALE

FIGURE 601-3

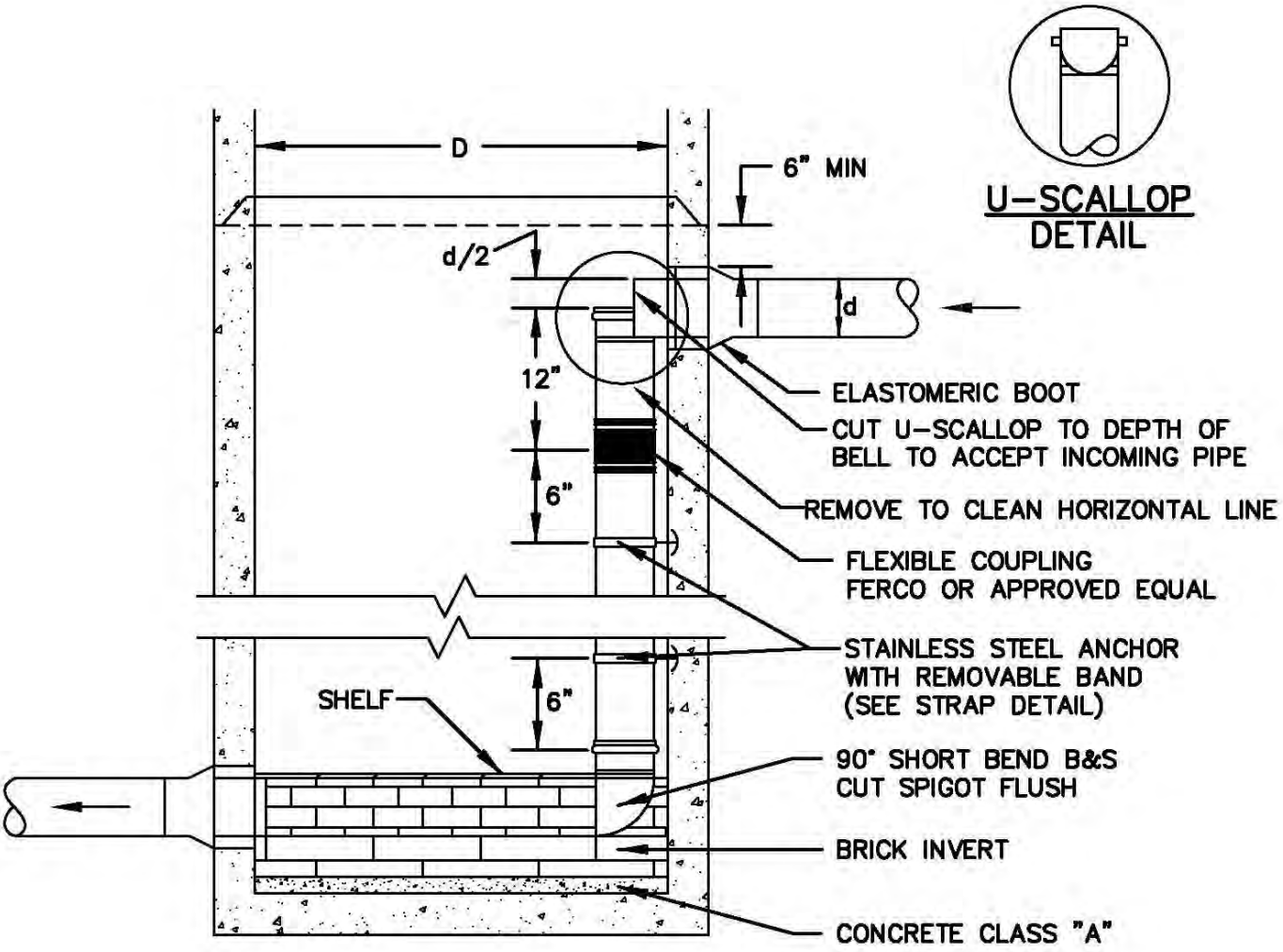

# OF DROPS	d	D
1	8"	4'
2	8" OR 10"	5'
1	12"	5'
1	15"	5'
1	18"	6'
1	24"	6'

INSIDE DROP CONNECTION FOR PVC PIPE

S:\DWG\DETAILS\601-4 DROPCONN.DWG

NOT TO SCALE

FIGURE 601-4

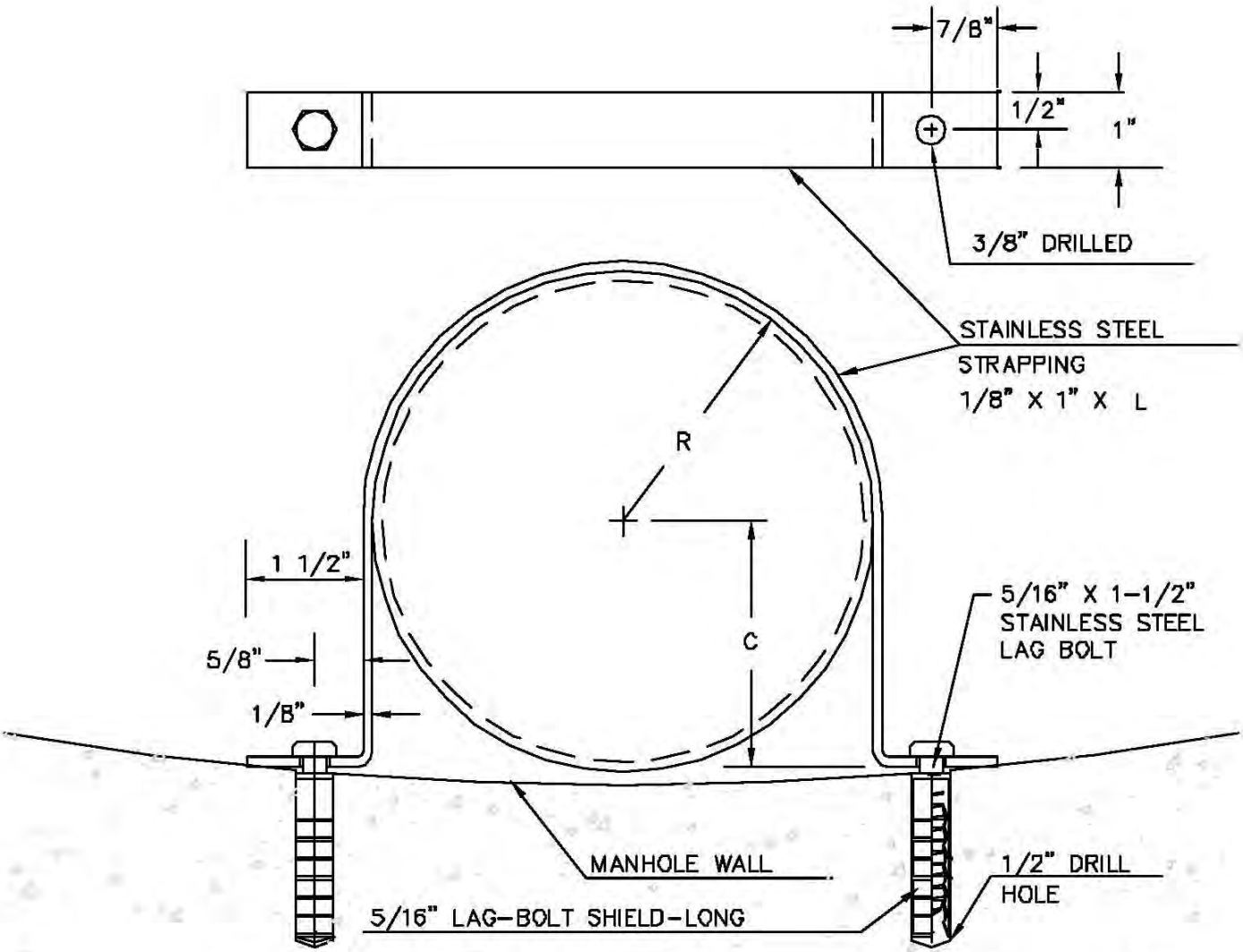

PIPE SIZE	L	R	C
4"	14.176"	2.125"	2.063"
6"	19.638"	3.188"	3.125"
8"	25.102"	4.250"	4.188"
10"	30.565"	5.313"	5.250"
12"	36.028"	6.375"	6.313"

STRAP DETAIL FOR INSIDE DROP CONNECTION

S:\DWG\DETAILS\601-5 ID-STRAP.DWG

NOT TO SCALE

FIGURE 601-5

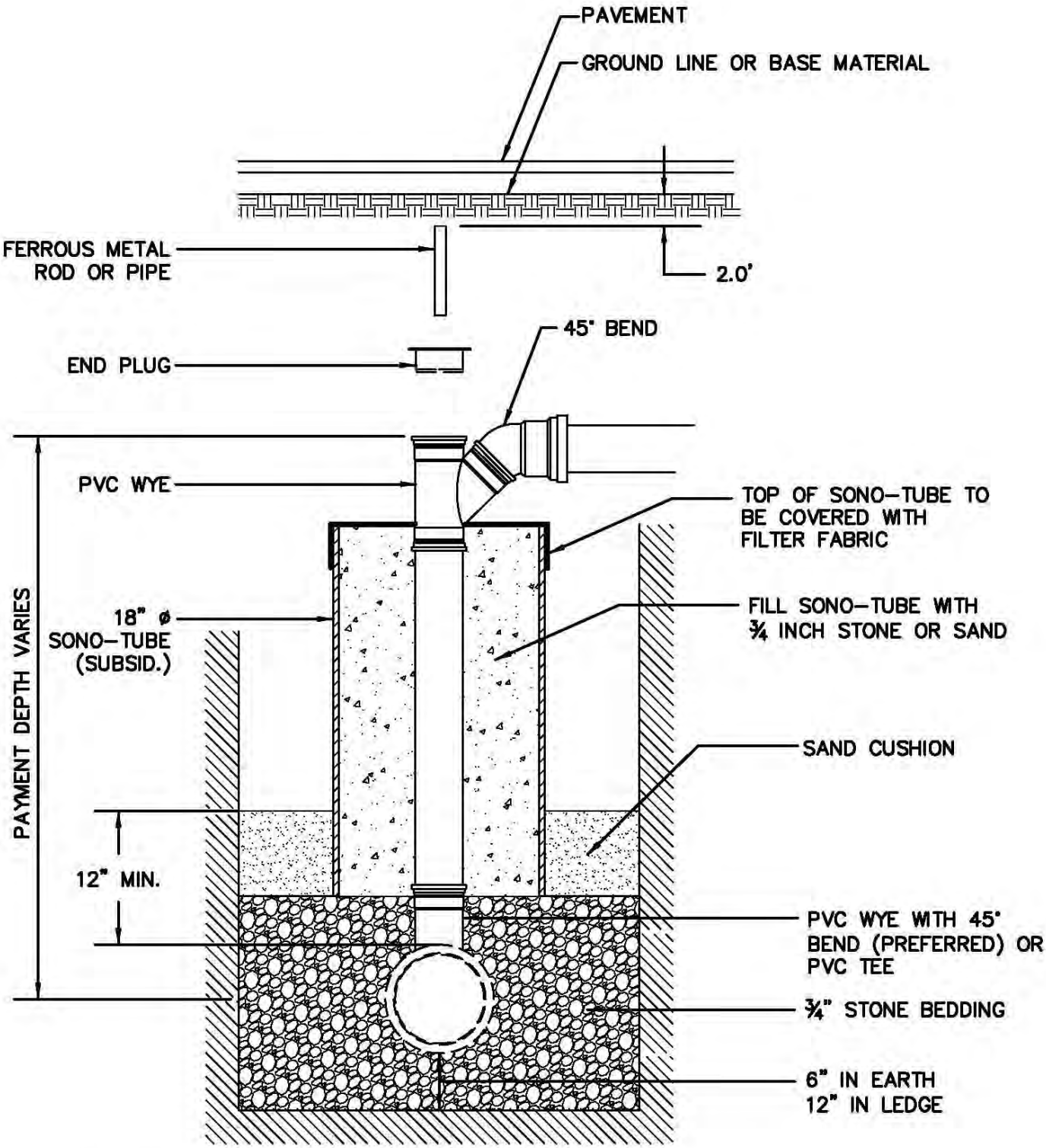

NOTE: FORMWORK OR SONO-TUBE SHALL BE LEFT IN PLACE.

SERVICE CHIMNEY FOR PVC PIPE

S:\DWG\DETAILS\601-6 CHIMNEY.DWG

NOT TO SCALE

FIGURE 601-6

SECTION 602 -- SANITARY SEWER MANHOLES

Description

1.1 This work shall consist of furnishing and installing sanitary sewer manholes; furnishing and placing manhole covers, all as shown on the plans or as ordered.

1.1.1 Sanitary sewer manholes shall conform to the requirements of the New Hampshire Code of Administrative Rules, Env-Wq 700 “Standards of Design and Construction for Sewerage and Wastewater Treatment Facilities" and as set forth in these specifications.

Materials

2.1 General.

2.1.1 Sanitary sewer manholes shall be precast concrete.

2.1.1.1 Cone and transition sections shall be eccentric in shape.

2.1.1.2 Base sections shall be monolithic construction to a point no less than 6 inches above the crown of the incoming pipe.

2.1.1.3 When manhole depth is less than 6 feet, a reinforced concrete slab cover may be used in lieu of a cone section. Such slab shall have an eccentric entrance opening and be capable of supporting H-20 loads.

2.1.1.4 Horizontal joints between sections of precast concrete barrels shall be of an overlapping type, sealed for water-tightness using a double row of an elastomeric or mastic-like sealant.

2.1.1.5 The name of the manufacturer and the date of manufacture shall be clearly marked on each precast section.

2.1.1.6 All sections shall be waterproofed, at the factory, with two seal coats applied to the exterior of the manhole in accordance with the seal coating manufacturer’s recommendations. Waterproofing shall be masonry seal MSP-1 waterproofing material as made by the Masonry Seal Corporation, Elyria, Ohio, or approved equal.

2.1.1.7 Manhole structures shall have a life in excess of 25 years.

2.1.2 Reinforcement shall be steel, or structural fibers. Steel shall conform to the requirements of 544. Fibers reinforcement used shall be as listed on the New Hampshire Department of Transportation’s current Qualified Products List.

2.1.3 Precast concrete sections shall conform to ASTM C478-06. The concrete shall be Class AA, meeting the requirements of Section 520.

2.1.4 Curing of all precast section shall conform to section 604.2.3.2.

2.2 Clay brick shall be hard burned sewer brick conforming to the requirements of ASTM C32-05 for Grade SS, hard brick.

2.3 Concrete masonry units shall conform to the requirements of ASTM C 139 and shall have a minimum compressive strength of 3000 pounds per square inch when tested by the method in AASHTO T 140.

2.4 Cement mortar shall conform to Section 707

2.5 Non-shrinking mortar shall be Hallemite, Waterplug, Embecco or an approved equal.

2.6 The castings shall be of even-grained cast iron, smooth and free from scale, lumps, blisters, sand holes and defects. Castings shall be equal to class 30, conforming to ASTM A48.

2.7 The word "SEWER" in three inch letters shall be plainly cast in the center of each manhole cover.

2.8 Joints shall be sealed watertight with an approved rubber on bitumastic sealant conforming to ASTM C990-09.

2.9 Bedding and backfill material shall conform to the requirements of Section 209.

Construction Requirements

3.1 Excavation shall conform to the requirements of Section 206 .

3.2 Bedding and backfill procedures shall conform to the requirements of Section 209.

3.3 Precast concrete sections shall be at least ten (10) days old when delivered to the construction site.

3.4 Sanitary manholes shall have a brick paved inverts and shelf constructed to conform to the size of pipe and flow. At changes in direction, the inverts shall be laid out in curves of the longest radius possible tangent to the center line of the sewer pipes. Shelves shall be constructed to the elevation of the highest pipe crown and sloped to drain towards the flow through the channel. Underlayment of invert and shelf shall consist of brick masonry. Inverts and shelves shall be placed after testing.

3.4.1 All lifting holes and joints shall be filled with non-shrinking mortar and pointed as directed.

3.5 Concrete construction shall conform to the requirements for structural concrete. Masonry shall conform to the requirements for the respective type. Masonry shall fit neatly and tightly around the pipe.

3.6 The Contractor shall provide for the temporary diversion of water in order to permit the installation of sanitary sewer manholes in a reasonably dry trench, unless otherwise permitted by the Engineer.

3.7 Prior to installation and adjustment of covers and frames, the top of the sanitary sewer manholes shall be temporarily covered to prevent accidental entry.

3.8 In accordance with the provisions of ASSHTO M105, 17.2, the following are the "other matters of workmanship and finish" required: Frames and covers shall be matched before being incorporated into the work. Covers shall make full and even bearing on the underlying surface to fit into the frames without rocking.

3.9 Sanitary sewer manholes specified to be adjusted shall be built up to the required elevation according to the requirements of 3.12.

3.10 All sewer manholes that are not in highly visible areas shall have locking covers. Locking bolts shall be a standard hex nut.

3.11 Sewer manholes covers shall be sufficiently raised to prevent storm water runoff from entering or ponding over them.

3.11.1 Sewer manhole covers below the 100 year floodplain elevation shall have a locking watertight cover installed.

3.12 Structures within the limits of bituminous concrete pavement shall be temporarily set at the elevation of the bottom of the binder course or as ordered. Just prior to the placement of the wearing course, they shall be set at their final grade. Backfill necessary around such structures after the base course has been completed shall be made with Class "A" concrete unless otherwise ordered.

3.12.1 Brick or precast concrete rings shall be used to adjust manhole frames to grade. The maximum allowable adjustment shall be 12 inches.

3.12.2 Frames shall be set on a full bed of mortar to ensure a watertight fit. They shall be set true to grade and fully aligned with the masonry opening.

3.12.3 A mortar fillet extending to the outer edge of the masonry and a minimum of 1 inch thick shall be constructed around the frame in such a manner as to shed water.

3.13 When connections to existing sanitary sewer manholes are required, the openings shall be cored and the pipe to manhole joints shall be neatly and tightly sealed with a

Kor- N-Seal Joint Sleeve or approved equal. Inverts shall be modified to meet the requirements of 3.4.

3.14 Pipe to manhole joints shall be as follows:

a) Elastomeric, rubber sleeve with watertight joints at the manhole opening and pipe surface;
b) Cast into the wall or secured with stainless steel clamps;
c) Elastomeric sealing ring cast in the manhole opening with seal formed on the surface of the pipe by compression of the ring; and
d) Non-shrink grouted joints where watertight bonding to the manhole and pipe can be obtained.

3.15 Flexible Pipe Joints

3.15.1 Flexible pipe joint shall be provided within the following distances from any manhole connection:

a) Within 48 inches for reinforced concrete (RC) pipe
b) Within 60 inches for PVC pipe larger than 15-inch diameter

3.15.2 No flexible joint shall be required for:

a) a. DI pipe
b) b. PVC pipe up through 15-inch diameter

3.16 Manhole steps are not allowed except for manholes that exceed 15 feet in depth as measured from rim to lowest invert. All steps shall meet the requirements outlined in New Hampshire Code of Administrative Rules , Env-Wq 700, “Standards of Design and Construction for Sewerage and Wastewater Treatment Facilities".

3.17 Upon completion, each sanitary sewer manhole shall be cleaned of silt, debris or other matter of any kind and shall be kept clean until final acceptance of the work.

Testing

4.1 General.

4.1.1 Manholes shall be tested for leakage using a vacuum test.

4.1.2 Whereas the tests are intended to verify watertightness of the precast concrete sections and joints, no adjustment to the leakage allowance will be made for any other cause.

4.1.3 The leakage test shall be performed prior to constructing the invert and shelf and before filling and pointing the interior horizontal joints.

4.1.4 All pipes and other openings into the manhole shall be suitably plugged. The pipes shall be adequately braced to prevent blowouts.

4.1.5 Leakage tests may be performed either before or after backfilling around the manhole. It is recommended that the tests be performed prior to backfilling. If the Contractor elects to test after backfilling, he shall do so at his own risk.

4.2 Vacuum Test.

4.2.1 Where the excavation has not been backfilled, the filling and pointing of exterior joints shall not be necessary prior to performing this test.

4.2.2 The vacuum test shall be conducted as follows:

4.2.2.1 The compression band shall be inflated to affect a seal between the vacuum base and the top of the manhole. The vacuum pump shall then be connected to the outlet port with the valve open and a vacuum of 10 inches Hg (20 inches of Hg absolute) drawn. The valve shall then be closed.

4.2.2.2 The following test criteria shall apply to manholes. The minimum acceptable test hold time for a 1inch Hg pressure drop to 9 inches Hg shall be:

a) Not less than 2 minutes for manholes less than 10 feet deep;
b) Not less than 2-1/2 minutes for manholes 10-15 feet deep; and,
c) Not less than 3 minutes for manholes greater than 15 feet deep.

4.2.2.3 If the pressure drop exceeds the acceptable limits the Contractor shall be allowed to make necessary repairs, as approved by the Engineer. The manhole shall then be re-tested.

4.2.3 Upon completion of a successful vacuum test, the interior and exterior joints shall be filled and pointed.

Method of Measurement

5.1 Sanitary sewer manholes will be measured by the vertical foot to the nearest 0.1 of a foot, from the bottom of the metal frame to the top of the base.

5.2 Connecting existing sanitary sewer manholes will be measured by the number of units connected.

5.3 Manhole covers will be measured by the number of units installed. A cover and frame will be a unit.

5.4 Adjusting covers and frames which have been set by others will be measured by the

number of units adjusted.

Basis of Payment

6.1 The accepted quantities of sanitary sewer manholes, of the diameter specified, will be paid for at the contract unit price per vertical foot complete in place. This price shall constitute full compensation for excavation (except rock), backfill, bedding and furnishing all materials, tools, equipment, labor and incidentals needed to complete the work including those necessary to test the manholes.

6.1.1 All rock structure excavation and any excavation of unsuitable material ordered below the specified grade will be paid for as provided in Section 206 .

6.1.2 Granular backfill material necessary for the replacement of unsuitable material removed below the specified grade will be paid as provided in Section 209. Granular backfill necessary for the replacement of over-excavated ledge will be subsidiary.

6.1.3 No extra allowance will be made for structures adjusted in accordance with 3.12.

6.2 The accepted quantities of connecting existing manholes will be paid for at the contract unit price per each existing manhole connected complete in place which price shall constitute full compensation for furnishing all materials, tools, equipment, labor and incidentals needed to complete the work, including those necessary to test the connections.

6.3 The accepted quantities of manhole covers and frames or of adjusting covers and frames which have been set by others, will be paid for at the contract unit price per each, complete in place, which price shall constitute full compensation for excavation, backfill and furnishing all materials, tools, equipment, labor and incidentals needed to complete the work.

6.3.1 No payment will be made for reconstructing portions of the above manholes which are unnecessarily disturbed.

6.4 Temporary diversion of water including trenching or pumping directly from the trench shall be subsidiary to the sanitary sewer manhole installation. When well points or other specific dewatering devices are requested or ordered, they will be paid as shown or as extra work.

6.5 Temporary diversion of sewer flows shall be subsidiary to the sanitary sewer manhole installation.

Sanitary Sewer Manhole Items to Read:
"...Including Excavation, Bedding & Backfill"

Pay Items and Units, Section 602 -- Sanitary Sewer Manholes:

602.3_	Sanitary Sewer Manholes,__ Foot Diameter	Vertical Foot
602.5	Connecting Existing Sanitary Sewer Manholes	Each
602.55	Adjusting Manhole Covers & Frames set by others	Each
602.6	Sewer Manhole Covers and Frames	Each
602.61	Watertight, Locking Sewer Manhole Covers and Frames	Each
602.62	Locking Sewer Manhole Covers and Frames	Each

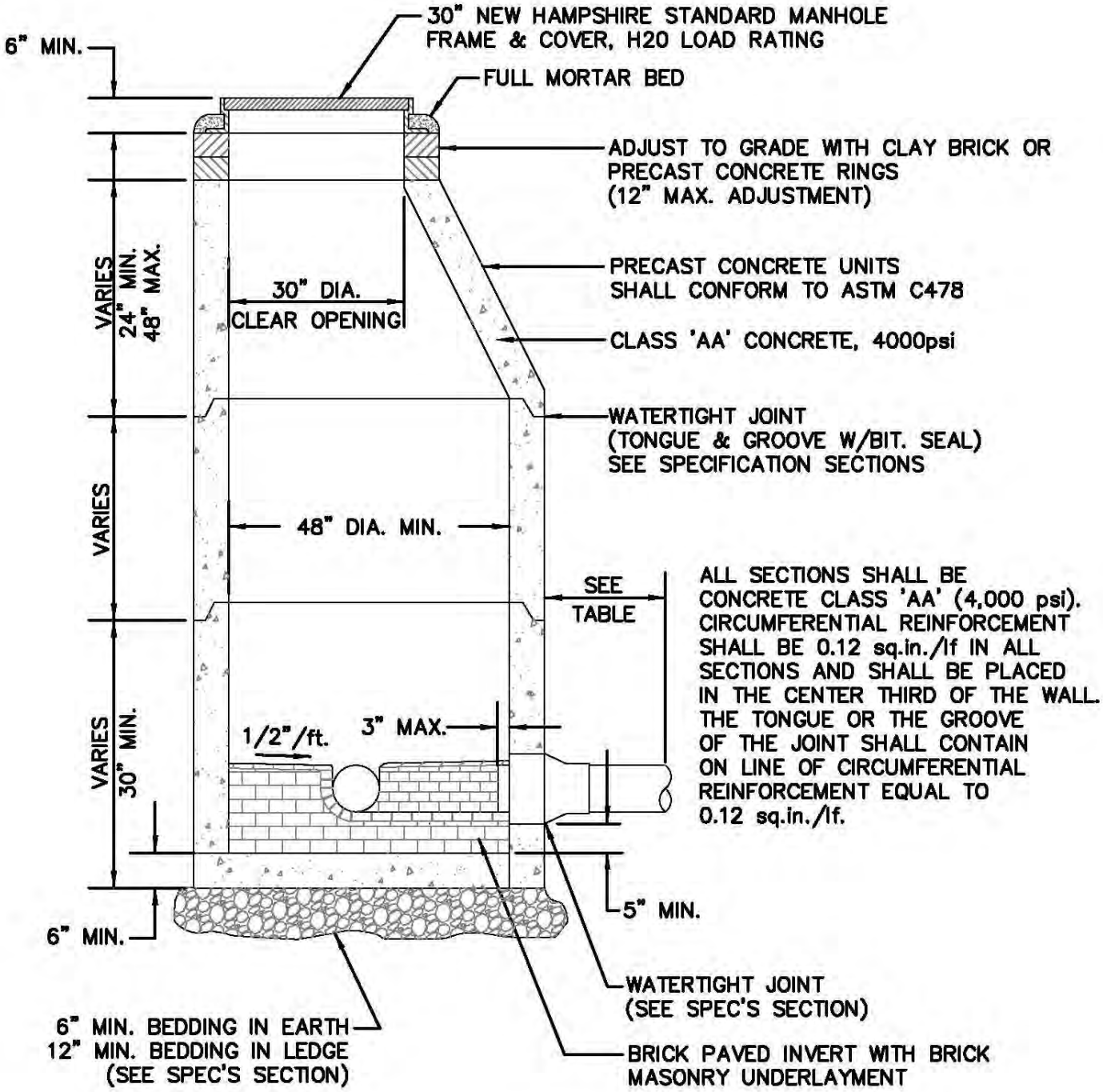

TYPE OF PIPE	SIZE	MAX. DIST. TO FIRST JOINT
R.C.P..	ALL	48"
D.I.P.	ALL	NONE REQUIRED
P.V.C.	>15"	60"
P.V.C.	0–15"	NONE REQUIRED

PRE–CAST REINFORCED SANITARY SEWER MANHOLE

S:\DWG\DETAILS\602-1 SMHDETL.DWG

NOT TO SCALE

FIGURE 602–1

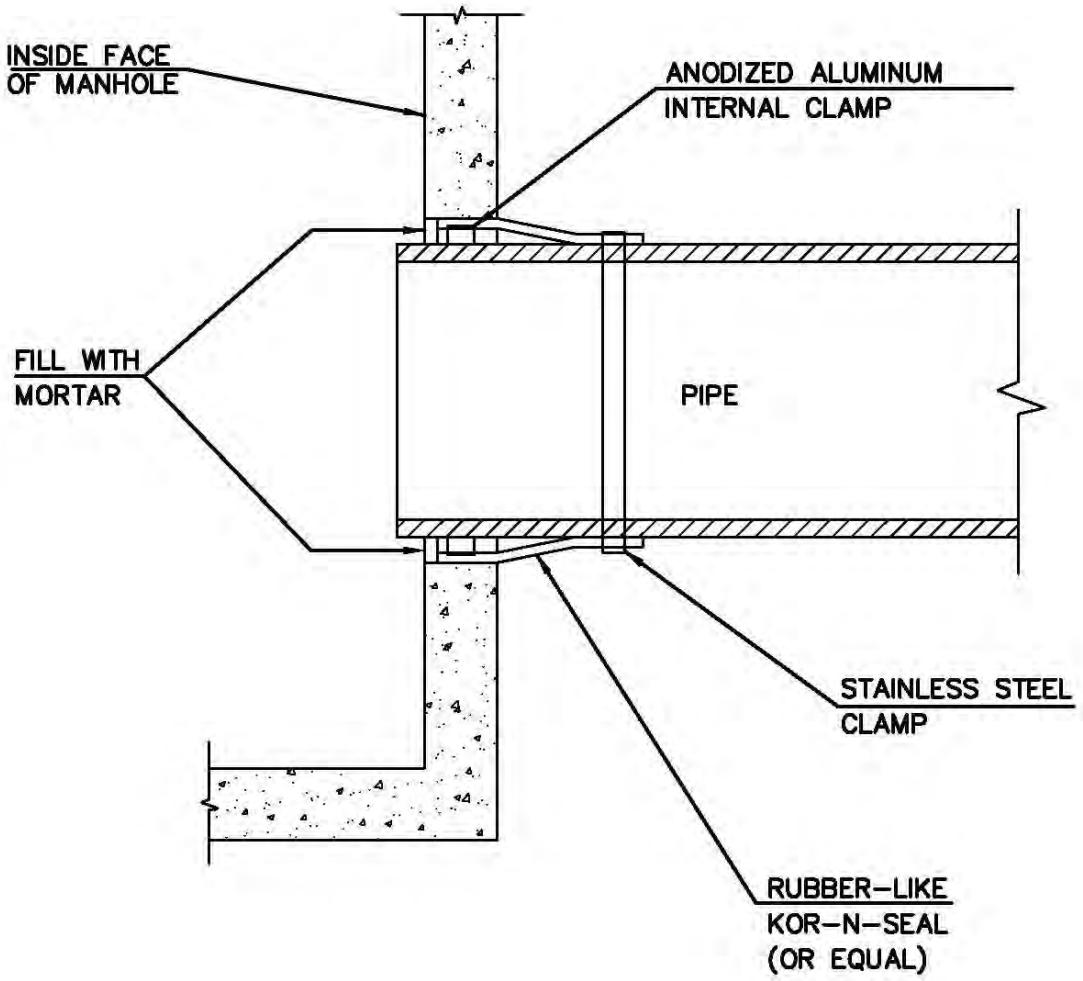

MANHOLE JOINT SLEEVE (BOOT)

S:\DWG\DETAILS\602-2 mhjointseal.dwg

NOT TO SCALE
FIG. 602-2

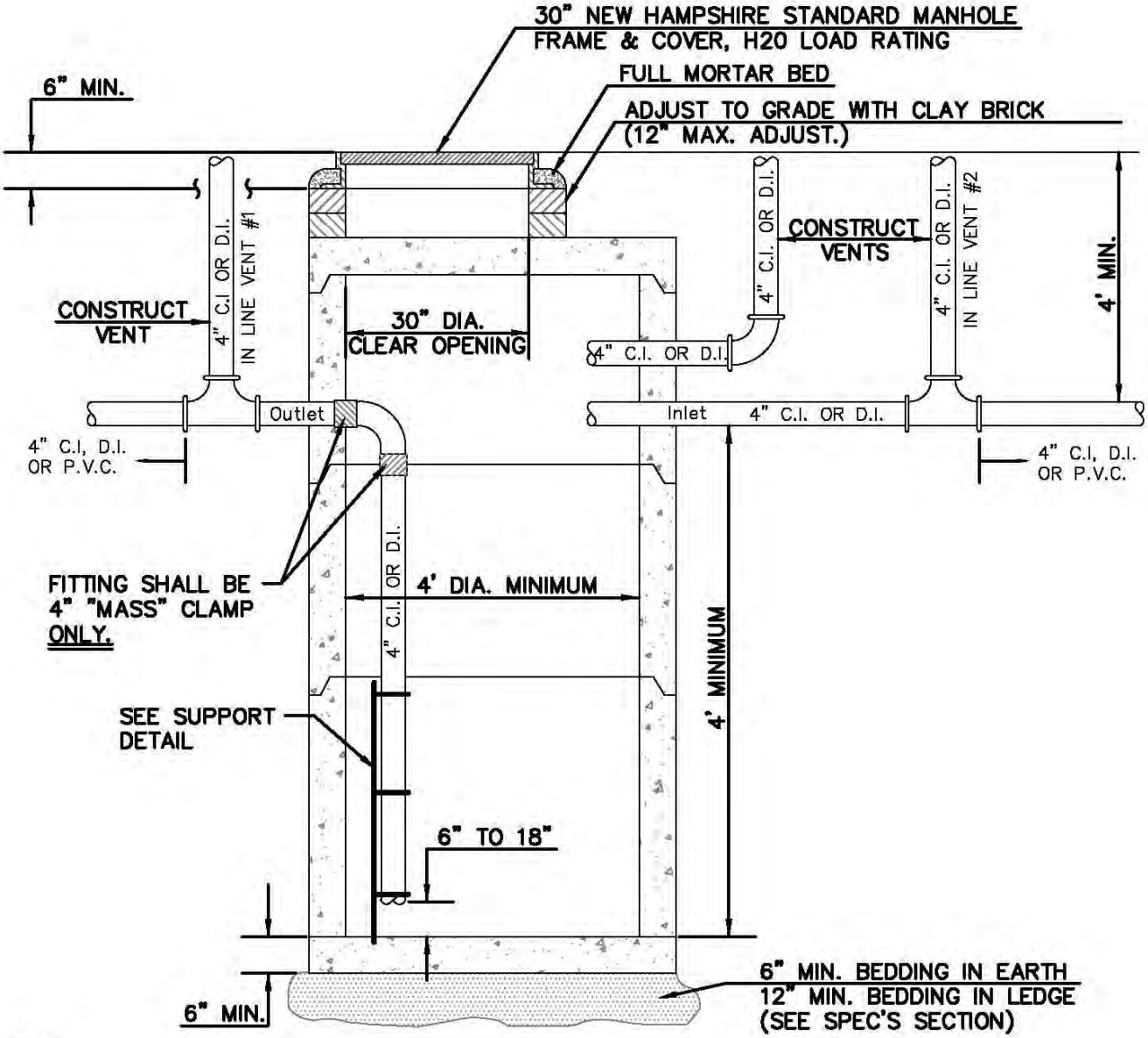

NOTES:

1. STEPS ARE NOT ALLOWED
2. ALL SECTIONS SHALL BE CONCRETE CLASS AA (4,000 PSI) CIRCUMFERENTIAL REINFORCEMENT SHALL BE 0.12 SQ. IN. PER L.F. IN ALL SECTIONS AND SHALL BE PLACED IN THE CENTER OF THE WALL.
3. THE TONGUE OR THE GROOVE OF THE JOINT SHALL CONTAIN ONE LINE OF CIRCUMFERENTIAL REINFORCEMENT EQUAL TO 0.12 SQ. IN. PER L.F.
4. ALL CONCRETE SHALL BE CLASS AA (4,000 PSI).
5. WATERTIGHT JOINT (TONGUE & GROOVE W/ BIT. SEAL) SEE SPECIFICATION SECTIONS.
6. PRECAST CONCRETE UNITS SHALL CONFORM TO ASTM C478.
7. ALL PVC PIPE USED SHALL BE SDR 35
8. TWO INLINE VENTS MAY BE MERGED INTO SINGLE RISER.

PRECAST REINFORCED CONCRETE GAS TRAP

S:\DWG\DETAILS\602-3 GAS-TRAP.DWG

NOT TO SCALE

FIGURE 602-3

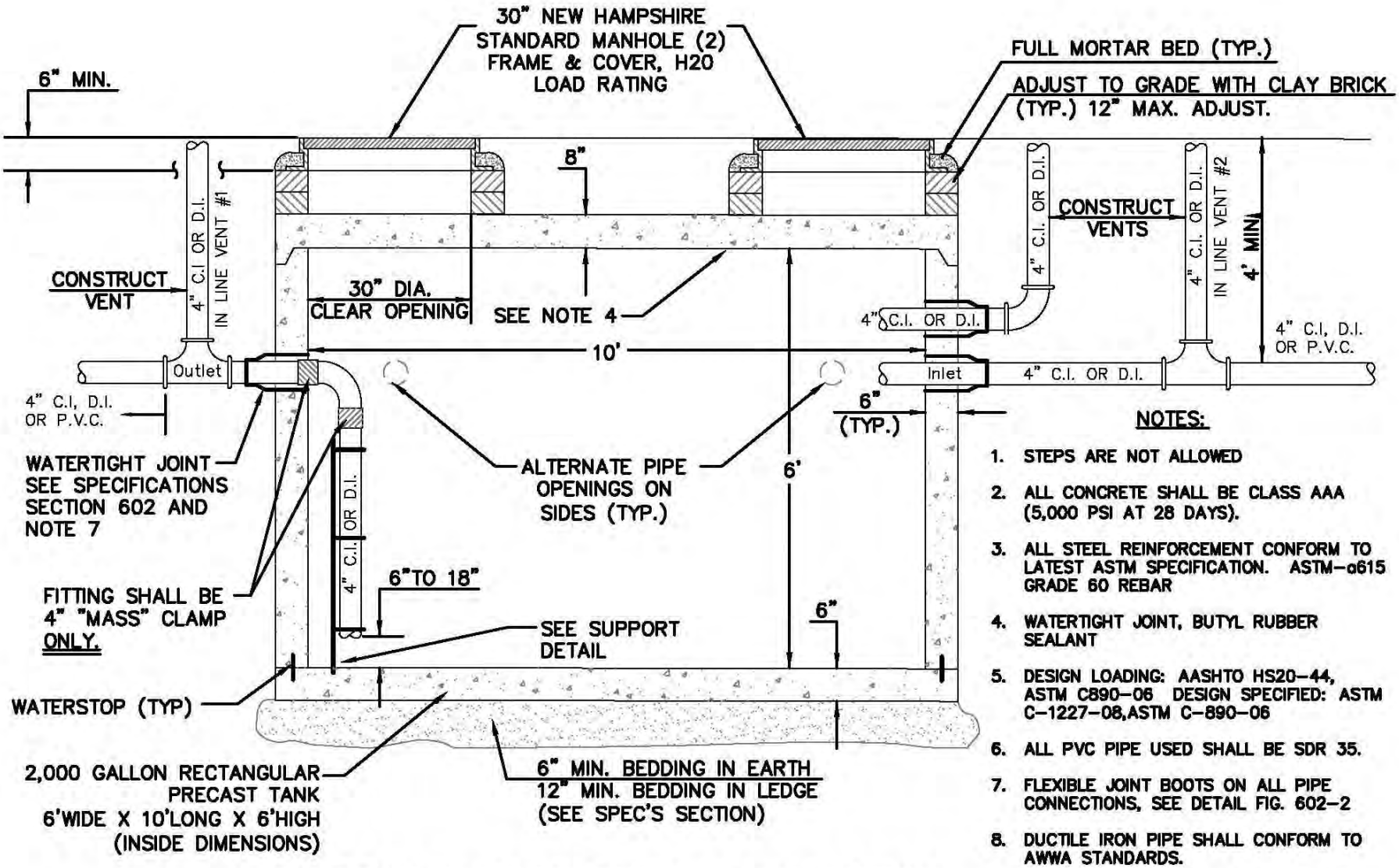

PRECAST REINFORCED CONCRETE RECTANGULAR GAS TRAP

NOT TO SCALE

FIGURE 602-3A

S:\DWG\DETAILS\602-3 GAS-TRAP.DWG

NOTES:

1. STEPS ARE NOT ALLOWED
2. ALL CONCRETE SHALL BE CLASS AAA (5,000 PSI AT 28 DAYS).
3. ALL STEEL REINFORCEMENT CONFORM TO LATEST ASTM SPECIFICATION. ASTM-a615 GRADE 60 REBAR
4. WATERTIGHT JOINT, BUTYL RUBBER SEALANT
5. DESIGN LOADING: AASHTO HS20-44, ASTM C890-06 DESIGN SPECIFIED: ASTM C-1227-08,ASTM C-890-06
6. ALL PVC PIPE USED SHALL BE SDR 35.
7. FLEXIBLE JOINT BOOTS ON ALL PIPE CONNECTIONS, SEE DETAIL FIG. 602-2
8. DUCTILE IRON PIPE SHALL CONFORM TO AWWA STANDARDS.
9. CAST IRON PIPE SHALL CONFORM TO CISPI STANDARD SPECIFICATION.
10. TWO INLINE VENTS MAY BE MERGED INTO SINGLE RISER.
11. 2000 GAL. UNIT SHOWN. SIZE AS NEEDED FOR SITE.

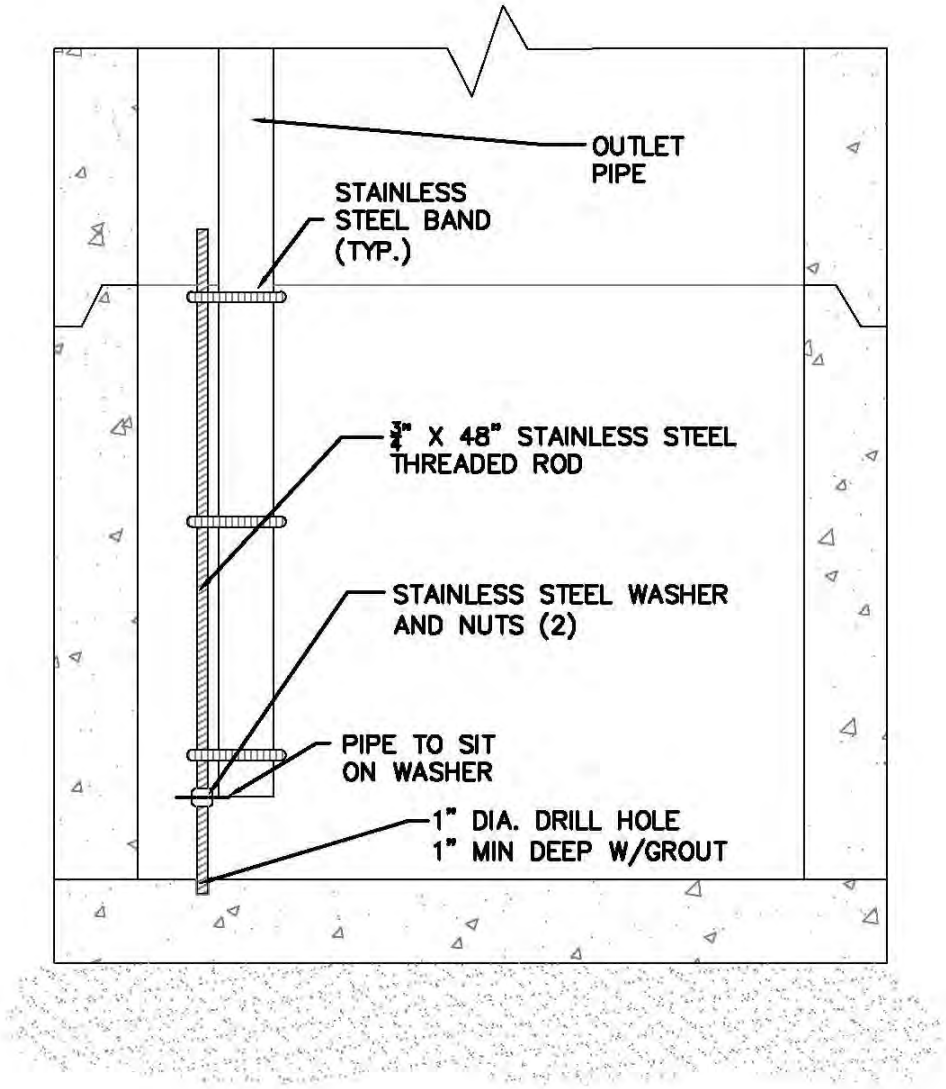

PRECAST REINFORCED CONCRETE GAS TRAP OUTLET SUPPORT DETAIL

S:\DWG\DETAILS\602-3 GAS-TRAP.DWG

NOT TO SCALE

FIGURE 602-3B

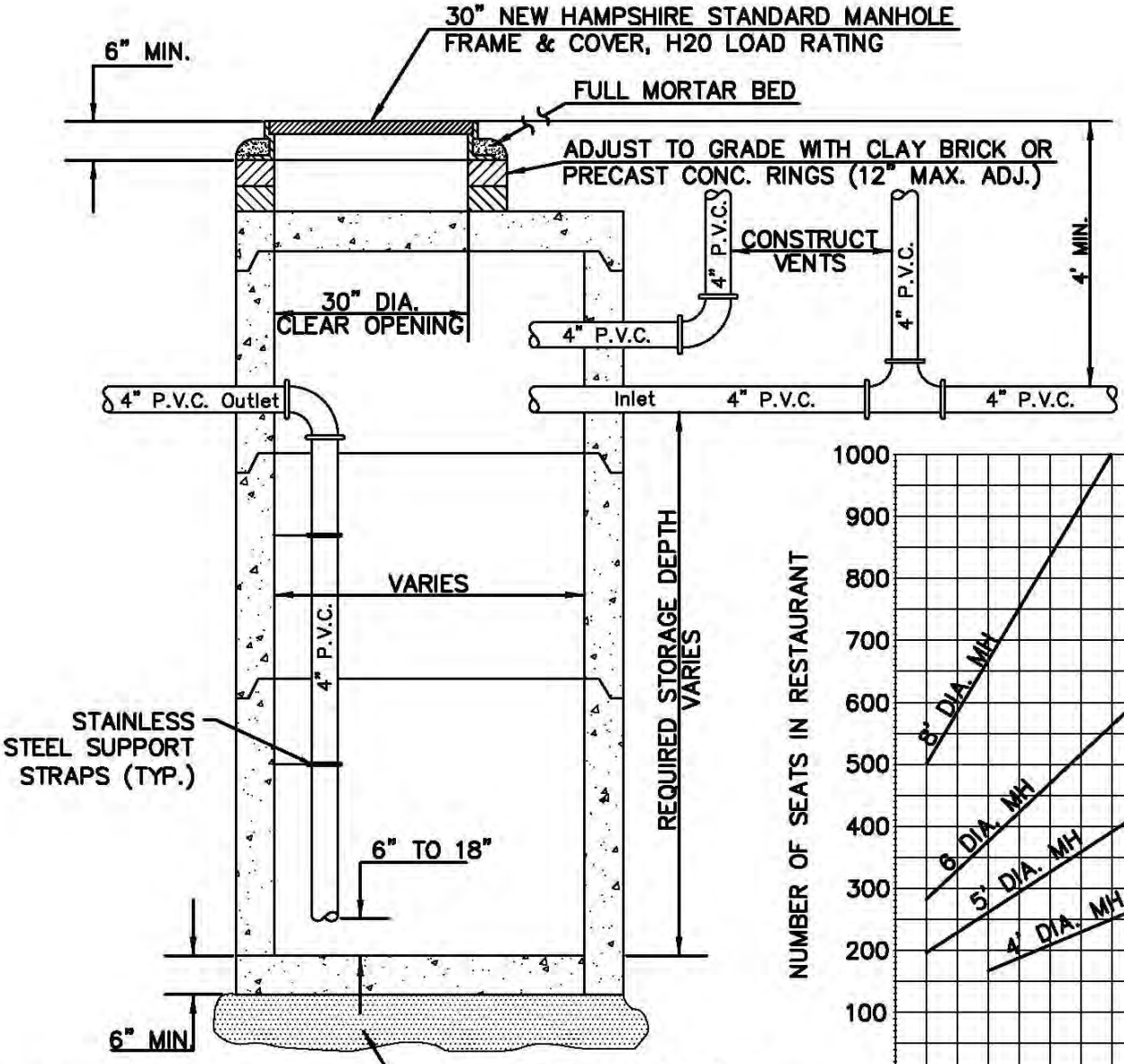

NOTES:

1. STEPS ARE NOT ALLOWED.
2. ALL SECTIONS SHALL BE CONCRETE CLASS AA (4,000 PSI) CIRCUMFERENTIAL REINFORCEMENT SHALL BE 0.12 SQ. IN. PER L.F. IN ALL SECTIONS AND SHALL BE PLACED IN THE CENTER OF THE WALL.
3. THE TONGUE OR THE GROOVE OF THE JOINT SHALL CONTAIN ONE LINE OF CIRCUMFERENTIAL REINFORCEMENT EQUAL TO 0.12 SQ. IN. PER L.F.
4. ALL CONCRETE SHALL BE CLASS AA (4,000 PSI).
5. WATERTIGHT JOINT (TONGUE & GROOVE W/ BIT. SEAL) SEE SPECIFICATION SECTIONS.
6. PRECAST CONCRETE UNITS SHALL CONFORM TO ASTM C478
7. ALL OPENINGS TO STRUCTURE SHALL BE CORED, AND PIPE TO MANHOLE JOINT SHALL BE NEATLY AND TIGHTLY SEALED WITH A KOR-N-SEAL JOINT SLEEVE OR APPROVED EQUAL.

PRECAST REINFORCED CONCRETE GREASE TRAP

S:\DWG\DETAILS\602-4 GRS-TRAP.DWG

NOT TO SCALE

FIGURE 602-4

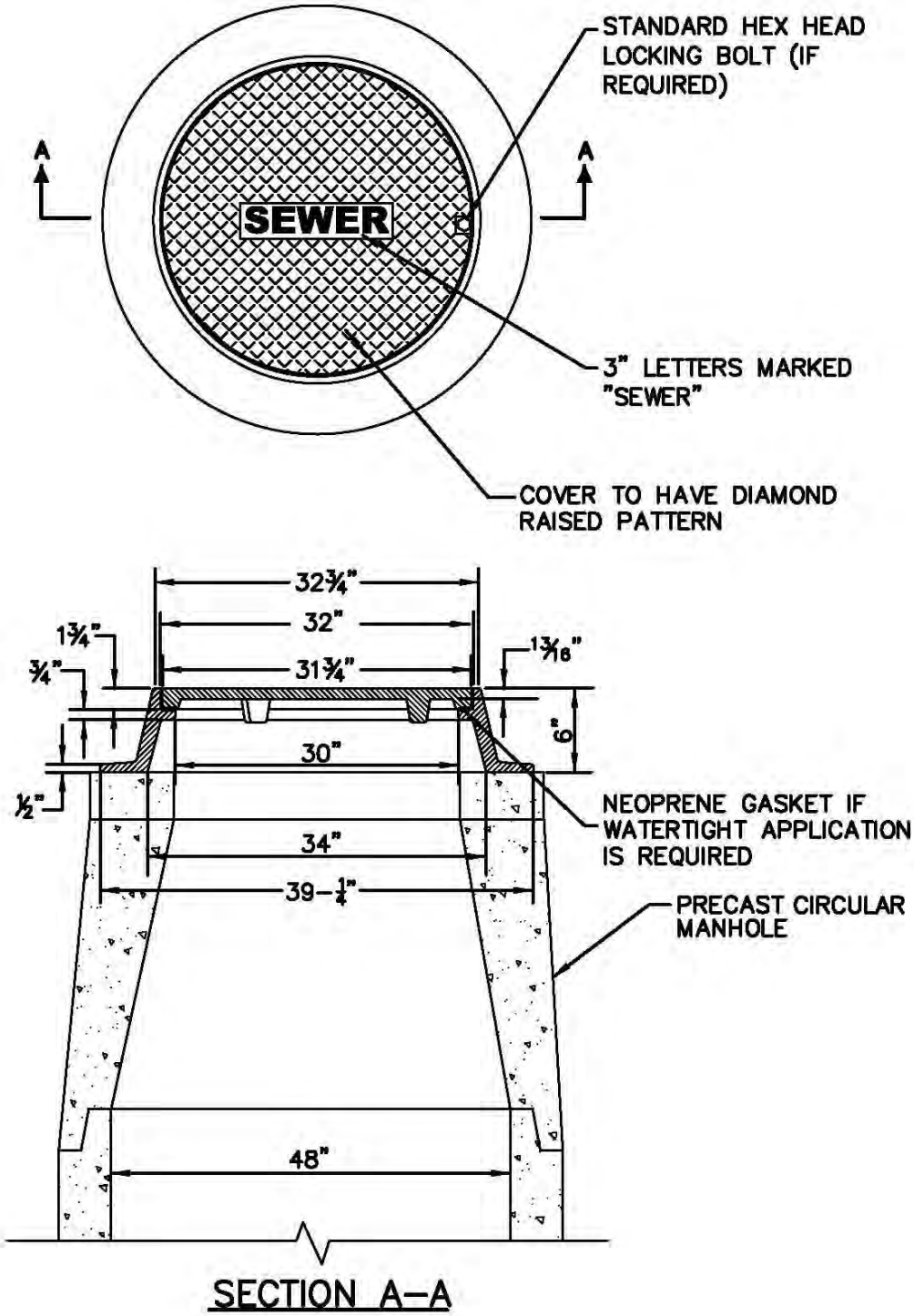

SEWER MANHOLE COVER

S:\DWG\DETAILS\602-5 SMH COVER.DWG

NOT TO SCALE
FIGURE 602–5

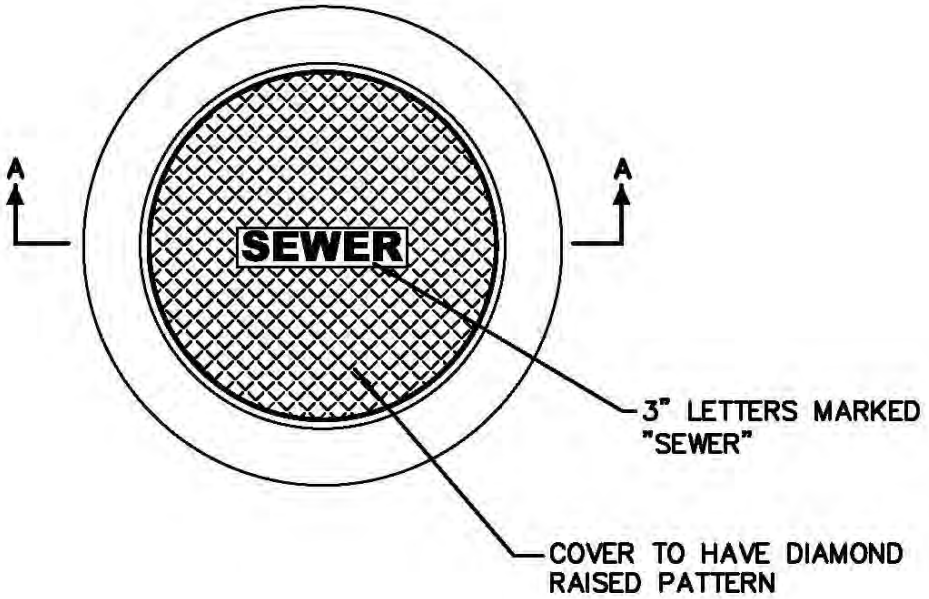

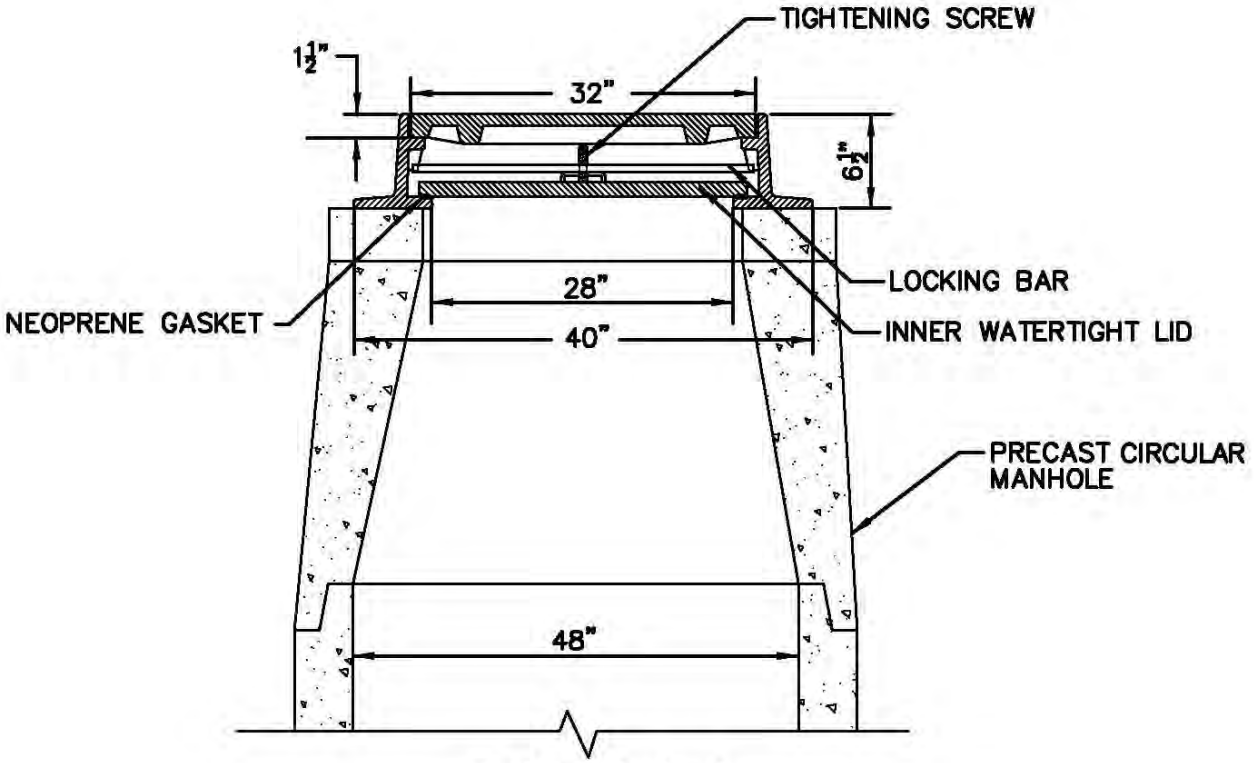

SECTION A–A

NOTE: FOR USE IN FLOODPLAIN AREAS

SEWER MANHOLE COVER WITH LOCKING INNER LID

S:\DWG\DETAILS\602-6 LOCK SMH COVER.DWG

NOT TO SCALE
FIGURE 602–6

SECTION 603 -- STORM DRAINS

Description

1.1 This work shall consist of furnishing and installing, or removing and relaying drain pipes and pipe end sections at the locations shown or ordered, including the necessary joints, fittings, and connections as required.

Materials

2.1 Reinforced Concrete Pipe, Circular.

2.1.1 This pipe shall conform to the requirements of AASHTO M 170, except as follows: Wall A thickness will be allowed in Class III pipe only. When the plans call for reinforced concrete pipe capable of withstanding an ultimate load greater than 3750 D, the design requirements of Class V shall be met with further provision that the pipe will withstand the ultimate D-load of a 4000 D.

2.1.2 Basis of acceptance of concrete pipe shall conform to AASHTO M 170, Section 5.1.1. Test requirements shall be as provided in Section 11 with the further provision that the pipe will withstand an additional ten percent of the D-load specified or brought to destruction. Permissible variation in pipe tolerances shall conform to AASHTO M 170, Section 12.

Table 603- 1 RCP Minimum Strength Requirements

D-Load to produce the ultimate load = Class	D-Load to produce a 0.01 inch crack	AASHTO designation Class
1500 D	1000 D	II
2000 D	1350 D	III
3000 D	2000 D	IV
3750 D	3000 D	V
4000 D	----	---

2.1.3 Workmanship and finish shall conform to AASHTO M 170, Section 12. Pipe shall be subject to rejection on account of failure to conform to any of the specification requirements of AASHTO M 170, Section 15. Individual sections of pipe may be rejected because of the following reasons:

a) Fracture or cracks passing through the wall, except for a single end crack that does not exceed the depth of a joint.
b) Defects that indicate imperfect proportioning, mixing, and molding.
c) Surface defects indicating honey-combed or open texture.
d) Damaged or cracked ends where such damage would prevent making a satisfactory

joint.

e) Any continuous crack having a surface width of 0.01 inch or more and extending for a length of 12 inches or more, regardless of position in the wall of the pipe.
f) The exposure of any steel in the barrel or the outside of the pipe indicating the displacement of reinforcement. Steel exposed at the ends will not be cause for rejection if a satisfactory joint can be made.

2.1.4 Markings on pipe shall conform to AASHTO M 170, Section 16 with the following information clearly marked on each section of pipe.

a) The pipe class and specification designation
b) The date of manufacture
c) The name or trademark of the manufacturer
d) Identification of plant

2.1.5 Concrete pipe shall be joined by using flexible water tight gaskets conforming to AASHTO M 198.

2.2 High Density Polyethylene (HDP) Pipe

2.2.1 Manufacturers of Polyethylene (PE) pipe must participate in, and maintain compliance with, the AASHTO "National Transportation Product Evaluation Program" (NTPEP) that audits producers of plastic pipe.

2.2.2 Corrugated High Density Polyethylene (HDP) pipe shall conform to the requirements of AASHTO M 294, Type S (smooth bore interior) and ASTM D2321 -Standard Practice for Underground Installation of Thermoplastic Pipe for Sewers and Other Gravity Flow Applications.

2.2.3 Basis of acceptance and test requirements of HDP pipe shall conform to AASHTO M 294. A manufacturer's certificate of compliance, as required by 105.03, and certified laboratory test results for each shipment shall be provided. The certified test results shall also include pipe lot number, date produced, date test was completed, and a signature of the lab supervisor.

2.2.4 Only soil tight pipe fittings supplied or recommended by the manufacturer shall be used.

2.2.5 Corrugated HDP pipe shall have an annular corrugated exterior and smooth inner wall.

2.2.6 Corrugated pipe, appurtenances, and all couplings shall be high density polyethylene of the size and type as shown on the Drawings, all manufactured by the same company and shall meet or exceed the following specifications: AASHTO M-294; ASTM F667 and ASTM D2321.

2.2.7 Backfilling over the pipe shall be to the pipe manufacturer's specifications. Cover shall be compacted to at least 92 percent of its maximum dry density as determined by ASTM Test D1557, Method D.

2.2.8 Split ring couplings or equal shall be utilized, no spring-on couplings will be allowed. One-half-inch wide self adhesive neoprene foam strips shall be applied on each inner rib of the coupling prior to installation on pipes to minimize any water leakage out of the joints.

2.2.9 Split ring couplings shall be connected with a minimum of six-gauge aluminum ties.

2.2.10 Bedding and backfill material shall conform to the requirements of Section 209.

2.3 Polyvinyl Chloride (PVC) Pipe

2.3.1 Manufactures of Polyvinyl Chloride (PVC) pipe must participate in, and maintain compliance with, the AASHTO "National Transportation Product Evaluation Program" (NTPEP) that audits producers of plastic pipe.

2.3.2 Polyvinyl chloride (PVC) profile wall pipe shall conform to the requirements of AASHTO M 304. PVC pipe shall not be used in applications where it will be exposed to long term ultraviolet light without approved protection for the exposed area.

2.3.3 Bedding and backfill material shall conform to the requirements of Section 209.

2.4 End Sections and Headwalls.

2.4.1 End sections will be allowed at the discretion of the engineer.

2.4.2 Headwalls shall be installed per Figs. 603-1 thru 603-7 or as otherwise ordered.

2.4.2.1 Concrete for Headwalls shall conform to Section 520.

2.4.2.2 Child protective grates shall be provided for all headwalls per Figs. 603-8a and 603-8b or as ordered by the Engineer.

Construction Requirements

3.1 General.

3.1.1 All pipe shall be examined before laying and no piece shall be installed which is found to be defective.

3.1.2 Excavation for pipe construction shall conform to the requirements of Section 206 .

3.1.3 Steam-cured or water-cured reinforced concrete pipe may be delivered to the project after 7 days from date of manufacture.

3.1.4 The Contractor shall provide for the temporary diversion of water in order to permit the installation of the pipe in a reasonably dry trench unless otherwise permitted.

3.1.5 Figure 603- 1to Figure 603- 8b and Figure 206- 1to Figure 206- 4 have been made a part of this specifications for clarification.

3.1.6 Where soft or other unsuitable material is encountered, all of such unsuitable material, for the depth and width specified, shall be removed as shown in Figure 206-1.

3.1.7 Where bedrock or other incompressible material is encountered, it shall be removed as shown in Figure 206- 2.

3.1.8 Granular backfill or other approved material shall be used to backfill the spaces left by the excavation of material removed in accordance with 3.1.6 and 3.1.7. The material shall be uniformly compacted.

3.1.9 The width of trenches shall be held to a minimum consistent with the space required to permit satisfactory jointing and thorough tamping of the bedding material under and around the pipe. Trenching below the top of the pipe shall as shown in Figure 206- 3 and Figure 209- 1. The trench above the pipe may be sloped or benched at the Contractor's Option as shown in Figure 206- 3.

3.1.10 The pipe shall be placed at the designated location on a prepared foundation so that the flow line of the pipe will conform to the required grade.

3.1.11 Where the top of the pipe would lie above the natural ground, sufficient compacted fill shall be constructed at pipe locations to insure that the pipe is placed in a trench equal in depth to at least the height of the pipe. The fill shall be constructed on each side of the pipe for a distance equal to at least 5 times the diameter of the pipe. Refer to Figure 206-4

3.1.12 Bedding and backfill shall conform to the requirements of Section 209.

3.1.13 Corrugated HDP pipe handling, storage, and installation procedures will be supplied for each manufacturer with the first shipment to the project. Prior to any installation a manufacturer’s representative will review these procedures with the installation Contractor and the Engineer. Installation shall conform to ASTM D 2321 or the manufacturer’s procedures whichever is more stringent.

3.1.14 Unless deemed unsatisfactory, the backfill material above the pipe spring line shall be in-situ. If the in-situ material is found to be unacceptable as backfill, acceptable material with similar frost susceptible characteristics shall be used.

3.1.15 If any defective pipe is discovered after it has been installed, it shall be removed and replaced with a sound pipe in a satisfactory manner at no additional cost to the Owner.

3.1.16 Precautions shall be taken to prevent flotation of the pipe in the trench.

3.2 Laying and Joining Pipe.

3.2.1 Proper facilities shall be provided for lowering the sections of pipe into the trench. Each section shall be securely attached to the adjoining section by the approved method for the type of joint used.

3.2.2 All pipe laying shall start at the lowest point of each run and shall be laid with the bell end upgrade.

3.2.3 Joints shall be made in accordance with the manufacturer's recommendations to form a watertight seal.

3.2.4 The pipe ends shall be thoroughly cleaned before the joint is made. When it is necessary to shorten a length of pipe, the pipe shall be sawed neatly using a masonry saw. The method of joining pipe sections shall be such that the ends are fully entered and the inner surfaces are reasonably flush and even.

3.2.5 Joints between dissimilar pipes shall be made in accordance with the recommendations of the pipe manufacturer.

3.2.6 Pipes under construction shall not be used to carry ground water from the trenches, except as may be approved by the Engineer.

3.2.7 The Contractor shall place an adequate protecting cover of earth or other approved material over the pipe before allowing equipment or traffic to pass over it.

3.3 Workmanship.

3.3.1 Any pipe which is not true to alignment and grade or which shows any undue settlement after laying or is damaged shall be removed and relaid or replaced without extra compensation.

3.3.2 Deflection for Corrugated HDP pipe shall not exceed 5 percent in the first 90 days. When deflection verification is considered necessary by the Engineer, all necessary manpower and equipment, including mandrels for such tests, will be provided by the Contractor and shall be performed at least 30 days after installation. When mandrel testing is required the mandrel diameter shall be the Specified Pipe Diameter minus Inside Diameter Tolerance (1.5% x Specified Diameter Pipe; Maximum Allowable is 0.5”) minus allowable deflection (5% x Specified Pipe Diameter). Any section of pipe not passing the mandrel shall be uncovered at no additional cost to the Owner and the bedding and backfill replaced to prevent excessive deflection. Repaired pipe shall be retested.

3.4 Removal of Pipe for Relaying.

3.4.1 Pipes shall be removed in accordance with 202.3.4 and 104.11.

3.4.2 Any pipe damaged shall be replaced with like material.

3.4.3 Any additional pipe needed shall be of like material.

Method of Measurement

4.1 Pipe will be measured by the linear foot to the nearest 0.1 of a foot according to size, class and depth. Measurement will be made between the ends of the pipe along the central axis as installed. In the case of twin pipes and other multiple pipe structures, each barrel will be measured separately.

4.1.1 The depth for measurement shall be determined by the vertical distance to the nearest 0.1 foot, between the original ground and the flow line of the pipe as installed.

4.2 Headwalls will be measured by the number of units installed.

Basis of Payment

5.1 The accepted quantities of pipe will be paid for at the contract unit price per linear foot of the size, type, and depth specified complete in place, with the following stipulations:

5.1.1 All rock structure excavation, and any excavation of unsuitable material required below the specified grade, will be paid as provided for in Section 206 .

5.1.2 When the depth of excavation for a pipe is increased more than 1 foot by lowering the grade, additional excavation will be paid as provided in Section 206 .

5.1.3 Granular backfill material necessary for the replacement of unsuitable material removed below the specified grade, will be paid as provided in Section 209.

5.2 Headwalls of the kind and size specified will be paid for at the contract unit price each complete in place.

5.3 Furnishing and installing child protective grates shall be considered subsidiary to the headwall.

5.4 The cost of furnishing and installing additional pipe for laying or relaying pipe, required through no fault of the Contractor, will be paid as provided in Extra Work (108.04) unless a bid item therefore is included in the contract.

5.5 Temporary diversion of water including trenching or pumping directly from the trench or

sumps shall be subsidiary to the pipe installation. When well points or other specific de-watering devices are required or ordered, they will be paid as shown or as provided in Extra Work (108.04).

Pay Items and Units, Section 603 -- Storm Drains:

Item Number 603 A B C D E	Item Number	Unit
603.	Section Number	
.A	Material or Use	
B	Type of Material, or Option	
C	Class	
D E	Diameter	
.0	Reinforced Concrete Pipes	Linear Foot
0	Circular	
1	Arch	
C	Class	
2	Class II	
3	Class III	
4	Class IV	
5	Class V	
.1	Plastic Pipe	Linear Foot
1	HDP, Type S	
2	PVC	
.2	Headwalls	Each
0	Reinforced Concrete	
1	Mortar Rubble Masonry	
2	Precast Concrete	
.3	Laying or Relaying Drainage Pipe (Furnished by the City or Salvaged)	Linear Foot
0	Unspecified	
1	Concrete	
2	HDP	
3	PVC	

All items to Read:
". . . Including Specified Excavation."

Examples:

603.00415	15" Reinforced Concrete Pipe, Class IV
603.32012	Laying or Relaying 12" Drainage Pipe
603.11012	Laying or Relaying 12" HDP Pipe

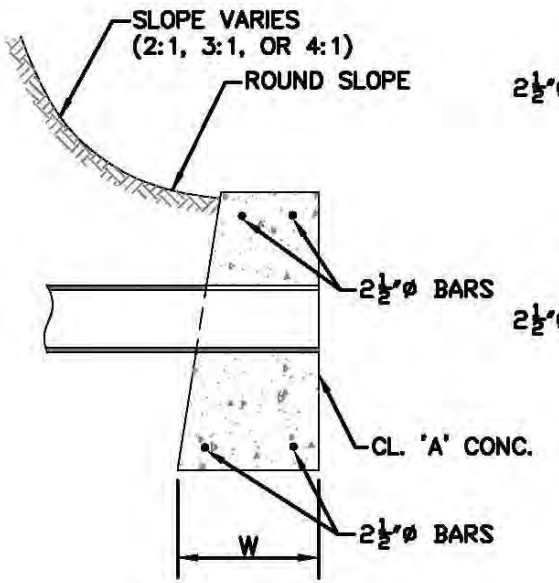

SECTION ON CENTERLINE

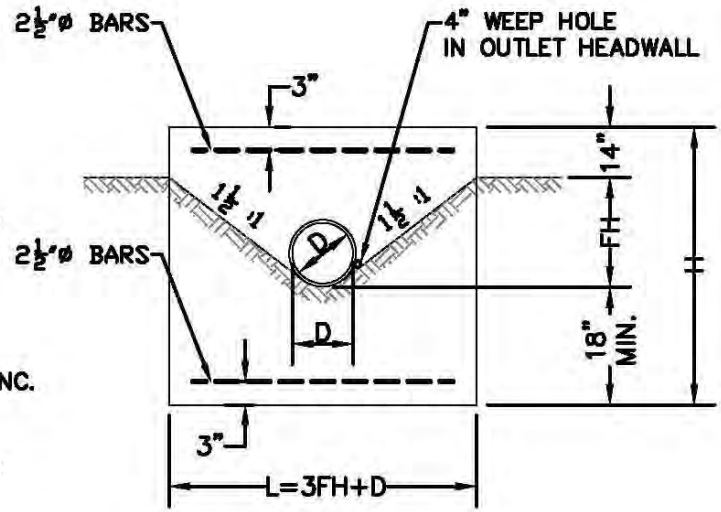

ELEVATION

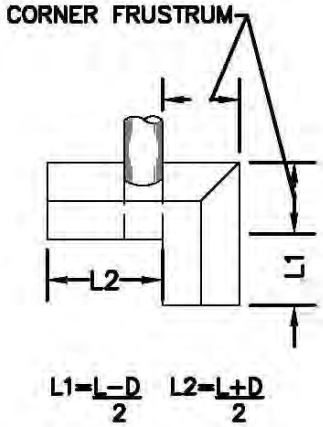

PLAN OF 'L' HEADWALL

DIAM. D INCHES	AREA OF PIPE SQ. FT.	MAS. PER FT. OF WALL SQ. YD.	MAS. PER HOLE CU. FT.	MAS. PER STD. HDR. CU. YD.	STEEL PER STD. HDR. LB.	LENGTH OF BARS	PIPE EXC. 1' DEPTH 1' LENGTH CU. YD.	HDR. EXC. PER HDR. 1' DEPTH CU. YD.	HDR. LENGTH L	HDR. HEIGHT H	FILL HEIGHT FH	h	WIDTH AT BOTTOM OF HDR. W	'L' HEADWALL	
														MAS. IN CORNER FRUSTRUM CU. YD.	HDR. EXC. PER HDR. 1' DEPTH CU. YD.
12	0.79	0.204	2.00	0.80	11	3' – 0"	0.111	0.911	4' – 3"	3' – 9"	1' – 1"	1' – 3"	1' – 11¼"	0.31	1.195
15	1.23	0.240	3.18	1.32	16	5' – 8"	0.120	1.204	6' – 0"	4' – 3"	1' – 7"	1' – 6"	2' – 0¾"	0.38	1.588
18	1.77	0.260	4.51	1.66	16	5' – 8"	0.130	1.375	7' – 0"	4' – 6"	1' – 10"	1' – 6"	2' – 1½"	0.42	1.700
24	3.14	0.301	7.98	2.41	24	8' – 8"	0.148	1.731	9' – 0"	5' – 0"	2' – 4"	1' – 6"	2' – 3"	0.51	2.086
30	4.91	0.344	12.60	3.32	29	10' – 8"	0.185	2.106	11' – 0"	5' – 6"	2' – 10"	1' – 6"	2' – 4½"	0.61	2.491
36	7.07	0.389	18.48	4.43	35	12' – 8"	0.222	2.500	13' – 0"	6' – 0"	3' – 4"	1' – 8"	2' – 6"	0.72	2.917
42	9.62	0.461	26.60	6.28	42	15' – 2"	0.259	3.082	15' – 9"	6' – 9"	4' – 1"	1' – 9"	2' – 8¼"	0.94	3.549
48	12.57	0.512	35.55	7.77	47	17' – 2"	0.296	3.520	17' – 9"	7' – 3"	4' – 7"	1' – 9"	2' – 9¾"	1.05	4.019
54	15.90	0.565	46.09	9.46	52	19' – 2"	0.333	3.977	19' – 9"	7' – 9"	5' – 1"	1' – 9"	2' – 11¼"	1.20	4.522
60	19.63	0.621	56.25	11.42	58	21' – 2"	0.370	4.451	21' – 9"	8' – 3"	5' – 7"	1' – 9"	3' – 0¾"	1.37	5.024
66	23.76	0.689	72.34	13.68	63	23' – 2"	0.407	4.947	23' – 9"	8' – 9"	6' – 1"	1' – 9"	3' – 2¼"	1.55	5.559
72	28.27	0.740	88.22	15.79	69	25' – 2"	0.445	5.460	25' – 9"	9' – 3"	6' – 7"	1' – 9"	3' – 3¾"	1.75	6.108

HEADWALLS FOR R.C. PIPE
CONCRETE MORTAR RUBBLE MASONRY

S:\DWG\DETAILS\603-1 HDWALL1.DWG

NOT TO SCALE
FIGURE 603–1

NOTE:
ALL LIKE BARS IN EACH HEADWALL ARE SAME SIZE.
EACH STD. HEADER HAS 4A, B & C-BARS, AND TWO D-BARS.

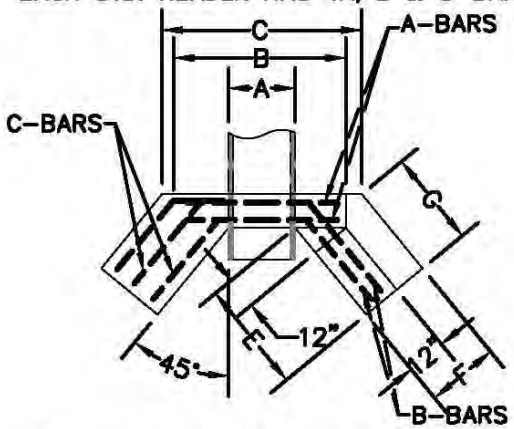

SYMMETRICAL ABOUT ℄
HALF PLAN OF
BOTTOM STEEL

HALF PLAN
SHWING TOP
STEEL

TOP ELEVATION

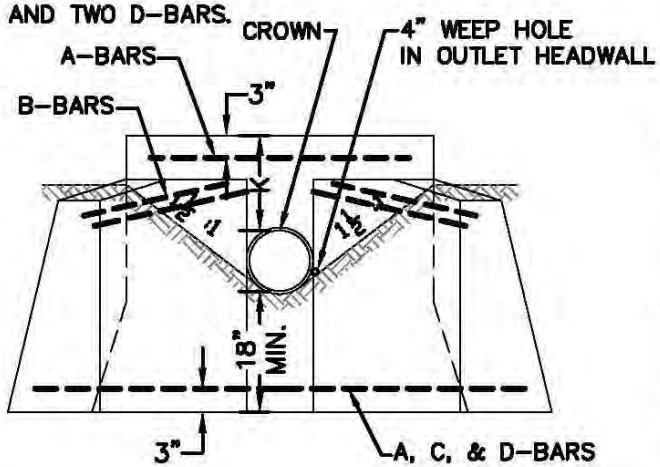

END ELEVATION

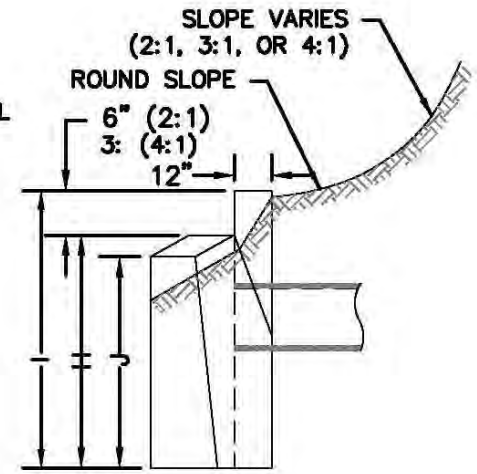

SIDE ELEVATION

	DIAM. D INCHES	AREA OF PIPE SQ. FT.	QUANTITIES PER HEADER: CONC. CU. YD.	STEEL LB.	EXC. FOR 1' DEPTH 1' LENGTH CU. YD.	PIPE EXC. PER 1' DEPTH 1' LENGTH CU. YD.	DIMENSIONS: A	B	C	E	F	G	H	I	J	K	REINFORCING STEEL: SIZE	LENGTH: A BARS	B BARS	C BARS	D BARS	D-BARS: a	b
2:1 SLOPES	24	3.14	1.97	36	1.58	0.148	2'-6"	5'-4"	6'-7"	3'-0"	1'-11"	2'-3"	5'-0"	4'-6"	3'-10"	1'-6"	½"ø	5'-0"	3'-2"	3'-0"	4'-8"	2'-5"	2'-3"
	30	4.91	2.57	42	1.80	0.185	3'-1"	5'-11"	7'-6"	3'-7"	2'-0"	2'-9"	5'-6"	5'-0"	4'-1"	1'-6"	½"ø	5'-7"	3'-9"	3'-7"	5'-3"	2'-6"	2'-9"
	36	7.07	3.24	47	2.12	0.222	3'-8"	6'-6"	8'-5"	4'-2"	2'-1"	3'-3"	6'-0"	5'-6"	4'-4"	1'-6"	½"ø	6'-2"	4'-3"	4'-1"	5'-10"	2'-8"	3'-2"
	42	9.62	4.46	125	2.35	0.259	4'-3"	7'-1"	9'-6"	5'-1"	2'-2"	4'-0"	6'-9"	6'-3"	4'-10"	1'-9"	½"ø	6'-9"	5'-3"	4'-11"	7'-10"	3'-10"	4'-0"
	48	12.57	5.38	139	2.55	0.296	4'-10"	7'-8"	10'-5"	5'-9"	2'-3"	4'-6"	7'-3"	6'-9"	5'-1"	1'-9"	½"ø	7'-4"	5'-11"	5'-7"	8'-5"	3'-10"	4'-7"
	54	15.90	6.46	151	3.15	0.333	5'-5"	8'-3"	11'-3"	6'-4"	2'-4"	5'-0"	7'-9"	7'-3"	5'-4"	1'-9"	½"ø	7'-11"	6'-7"	6'-1"	9'-2"	4'-1"	5'-1"
	60	19.63	7.55	162	3.51	0.370	6'-0"	8'-10"	12'-2"	6'-11"	2'-5"	5'-6"	8'-3"	7'-9"	5'-8"	1'-9"	½"ø	8'-6"	7'-1"	6'-8"	9'-9"	4'-1"	5'-8"
	66	23.76	8.80	176	3.80	0.407	6'-7"	9'-5"	13'-2"	7'-6"	2'-6"	6'-0"	8'-9"	8'-3"	5'-11"	1'-9"	½"ø	9'-1"	7'-8"	7'-3"	10'-5"	4'-2"	6'-3"
	72	28.27	10.29	188	4.12	0.445	7'-2"	10'-0"	14'-0"	8'-2"	2'-7"	6'-6"	9'-3"	8'-9"	6'-3"	1'-9"	½"ø	9'-8"	8'-3"	7'-10"	11'-0"	4'-3"	6'-9"
4:1 SLOPES	24	3.14	2.58	43	1.90	0.148	2'-6"	5'-4"	6'-9"	3'-11"	2'-1"	3'-2"	5'-0"	4'-9"	4'-3"	1'-6"	½"ø	5'-0"	4'-3"	4'-0"	5'-6"	2'-6"	3'-0"
	30	4.91	3.31	49	2.22	0.185	3'-1"	5'-11"	7'-8"	4'-8"	2'-2"	3'-9"	5'-6"	5'-3"	4'-7"	1'-6"	½"ø	5'-7"	5'-0"	4'-8"	6'-3"	2'-8"	3'-7"
	36	7.07	4.33	56	2.58	0.222	3'-8"	6'-6"	8'-7"	5'-5"	2'-3"	4'-5"	6'-0"	5'-9"	5'-0"	1'-6"	½"ø	6'-2"	5'-9"	5'-4"	7'-1"	2'-10"	4'-3"
	42	9.62	5.99	149	3.11	0.259	4'-3"	7'-1"	9'-9"	6'-7"	2'-5"	5'-4"	6'-9"	6'-6"	5'-6"	1'-9"	½"ø	6'-9"	6'-11"	6'-5"	9'-3"	4'-0"	5'-3"
	48	12.57	7.28	163	3.48	0.296	4'-10"	7'-8"	10'-7"	7'-4"	2'-6"	6'-0"	7'-3"	7'-0"	5'-11"	1'-9"	½"ø	7'-4"	7'-8"	7'-1"	10'-1"	4'-2"	5'-11"
	54	15.90	8.78	179	3.89	0.333	5'-5"	8'-3"	11'-6"	8'-2"	2'-7"	6'-9"	7'-9"	7'-6"	6'-3"	1'-9"	½"ø	7'-11"	8'-6"	7'-10"	10'-11"	4'-3"	6'-8"
	60	19.63	10.35	194	4.29	0.370	6'-0"	8'-10"	12'-5"	8'-11"	2'-8"	7'-4"	8'-3"	8'-0"	6'-7"	1'-9"	½"ø	8'-6"	9'-3"	8'-8"	11'-9"	4'-4"	7'-5"
	66	23.76	12.10	210	4.70	0.407	6'-7"	9'-5"	13'-3"	9'-8"	2'-9"	8'-0"	8'-9"	8'-6"	7'-0"	1'-9"	½"ø	9'-1"	10'-0"	9'-5"	12'-8"	4'-7"	8'-1"
	72	28.27	14.14	222	5.16	0.445	7'-2"	10'-0"	14'-3"	10'-6"	2'-10"	8'-8"	9'-3"	9'-0"	7'-4"	1'-9"	½"ø	9'-8"	10'-10"	9'-9"	13'-5"	4'-8"	8'-9"

CONCRETE HEADWALLS w/45° WINGS FOR R.C. PIPE

S:\DWG\DETAILS\603-2 Conc Headwall Wings.DWG

NOT TO SCALE
FIGURE 603-2

NOTE:
DIMENSIONS SHOWN ARE TO PAVEMENT LINES.
MORTAR RUBBLE MASONRY TO BE STEPPED OUTSIDE PAVEMENT LINES ON SLOPING FACES

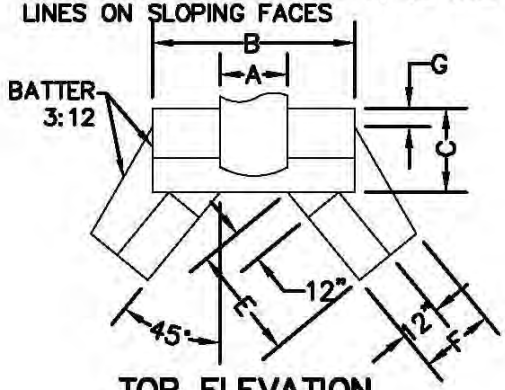

TOP ELEVATION

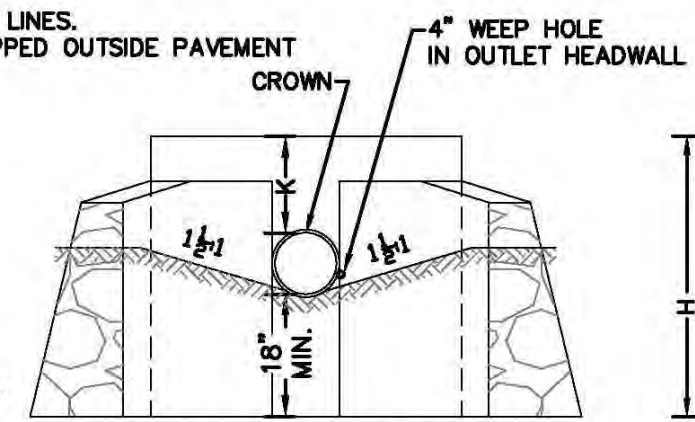

END ELEVATION

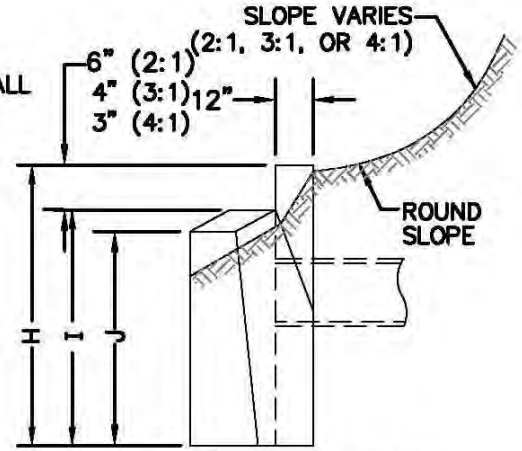

SIDE ELEVATION

	DIAM. D INCHES	AREA OF PIPE SQ. FT.	QUANTITIES IN CUBIC YARDS			DIMENSIONS									
			PER HEADER		PIPE EXC. PER 1' DEPTH 1' LENGTH										
			M.R.M.	EXC. FOR 1' DEPTH		A	B	C	E	F	G	H	I	J	K
2:1 SLOPES	24	3.14	2.45	1.89	0.148	2'-6"	5'-4"	2'-3"	2'-11"	1'-11"	0'-6"	5'-0"	4'-6"	3'-10"	1'-6"
	30	4.91	3.19	2.28	0.185	3'-1"	5'-11"	2'-5"	3'-6"	2'-0"	0"-5"	5'-6"	5'-0"	4'-1"	1'-6"
	36	7.07	4.03	2.57	0.222	3'-8"	6'-6"	2'-6"	4'-1"	2'-1"	0'-4"	6'-0"	5'-6"	4'-4"	1'-6"
	42	9.62	5.50	3.09	0.259	4'-3"	7'-1"	2'-8"	5'-0"	2'-2"	0'-3"	6'-9"	6'-3"	4'-10"	1'-9"
	48	12.57	6.68	3.53	0.296	4'-10"	7'-8"	2'-10"	5'-8"	2'-3"	0'-2"	7'-3"	6'-9"	5'-1"	1'-9"
	54	15.90	7.92	3.95	0.333	5'-5"	8'-3"	2'-11"	6'-3"	2'-4"	0'-1"	7'-9"	7'-3"	5'-4"	1'-9"
	60	19.63	9.39	4.40	0.370	6'-0"	8'-10"	3'-1"	6'-10"	2'-5"	0'-1"	8'-3"	7'-9"	5'-8"	1'-9"
	66	23.76	10.90	4.81	0.407	6'-7"	9'-5"	3'-2"	7'-5"	2'-6"	0-0"	8'-9"	8'-3"	5'-11"	1'-9"
	72	28.27	12.66	5.22	0.445	7'-2"	10'-0"	3'-4"	8'-1"	2'-7"	0'-1"	9'-3"	8'-9"	6'-3"	1'-9"
3:1 SLOPES	24	3.14	2.81	2.09	0.148	2'-6"	5'-4"	2'-3"	3'-6"	2'-1"	0'-6"	5'-0"	4'-9"	4'-3"	1'-6"
	30	4.91	3.73	2.51	0.185	3'-1"	5'-11"	2'-5"	4'-3"	2'-2"	0'-6"	5'-6"	5'-3"	4'-7"	1'-6"
	36	7.07	4.69	2.90	0.222	3'-8"	6'-6"	2'-6"	4'-11"	2'-3"	0'-4"	6'-0"	5'-9"	5'-0"	1'-6"
	42	9.62	6.47	3.46	0.259	4'-3"	7'-1"	2'-8"	6'-0"	2'-5"	0'-3"	6'-9"	6'-6"	5'-6"	1'-9"
	48	12.57	7.85	3.93	0.296	4'-10"	7'-8"	2'-10"	6'-8"	2'-6"	0'-3"	7'-3"	7'-0"	5'-11"	1'-9"
	54	15.90	9.37	4.37	0.333	5'-5"	8'-3"	2'-11"	7'-5"	2'-7"	0'-2"	7'-9"	7'-6"	6'-3"	1'-9"
	60	19.63	11.10	4.85	0.370	6'-0"	8'-10"	3'-1"	8'-1"	2'-8"	0'-1"	8'-3"	8'-0"	6'-7"	1'-9"
	66	23.76	12.95	5.36	0.407	6'-7"	9'-5"	3'-2"	8'-10"	2'-9"	0'-0"	8'-9"	8'-6"	7'-0"	1'-9"
	72	28.27	15.03	5.86	0.445	7'-2"	10'-0"	3'-4"	9'-6"	2'-10"	0'-0"	9'-3"	9'-0"	7'-4"	1'-9"
4:1 SLOPES	24	3.14	3.05	2.21	0.148	2'-6"	5'-4"	2'-3"	3'-10"	2'-1"	0'-6"	5'-0"	4'-9"	4'-3"	1'-6"
	30	4.91	4.02	2.62	0.185	3'-1"	5'-11"	2'-5"	4'-7"	2'-2"	0'-6"	5'-6"	5'-3"	4'-7"	1'-6"
	36	7.07	5.10	3.03	0.222	3'-8"	6'-6"	2'-6"	5'-4"	2'-3"	0'-4"	6'-0"	5'-9"	5'-0"	1'-6"
	42	9.62	7.03	3.65	0.259	4'-3"	7'-1"	2'-8"	6'-6"	2'-5"	0'-3"	6'-9"	6'-6"	5'-6"	1'-9"
	48	12.57	8.60	4.14	0.296	4'-10"	7'-8"	2'-10"	7'-3"	2'-6"	0'-3"	7'-3"	7'-0"	5'-11"	1'-9"
	54	15.90	10.28	4.62	0.333	5'-5"	8'-3"	2'-11"	8'-1"	2'-7"	0'-2"	7'-9"	7'-6"	6'-3"	1'-9"
	60	19.63	12.18	5.16	0.370	6'-0"	8'-10"	3'-1"	8'-10"	2'-8"	0'-1"	8'-3"	8'-0"	6'-7"	1'-9"
	66	23.76	14.24	5.67	0.407	6'-7"	9'-5"	3'-2"	9'-7"	2'-9"	0'-1"	8'-9"	8'-6"	7'-0"	1'-9"
	72	28.27	16.54	6.21	0.445	7'-2"	10'-0"	3'-4"	10'-5"	2'-10"	0'-0"	9'-3"	9'-0"	7'-4"	1'-9"

MORTAR RUBBLE MASONRY HEADWALLS w/45° WINGS FOR R.C. PIPE

S:\DWG\DETAILS\603-3 Mortar Rubble With 45.DWG

NOT TO SCALE

FIGURE 603-3

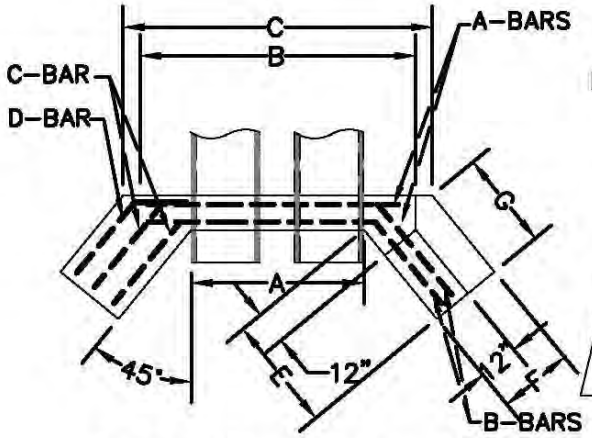

SYMMETRICAL ABOUT ~C
HALF PLAN OF
BOTTOM STEEL

HALF PLAN
SHOWING TOP
STEEL

TOP ELEVATION

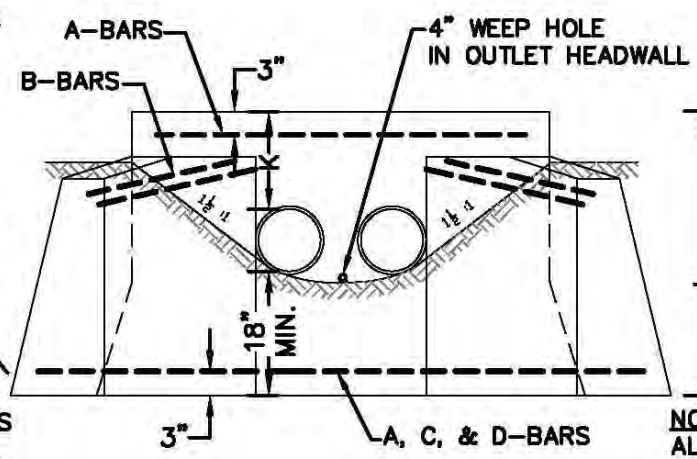

END ELEVATION

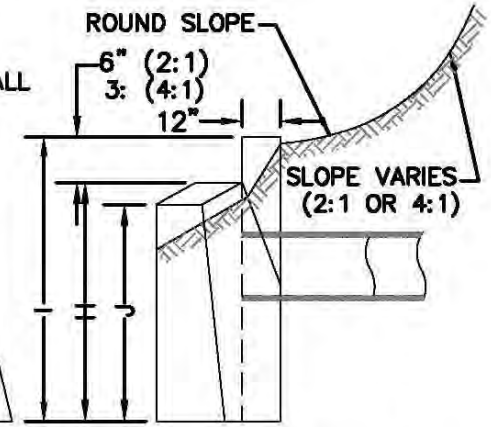

NOTE:
ALL BARS IN EACH HEADWALL ARE THE SAME SIZE. EACH STD HEADER HAS 4 A, B, & BARS, AND 2 D BARS.

SIDE ELEVATION

	DIAM. D INCHES	AREA OF PIPE SQ. FT.	QUANTITIES PER HEADER: CONC. CU. YD.	STEEL LB.	EXC. FOR 1' DEPTH CU. YD.	PIPE EXC. PER 1' DEPTH 1' LENGTH CU. YD.	DIMENSIONS: A	B	C	E	F	G	H	I	J	K	D/2	REINFORCING STEEL: SIZE	LENGTH: A BARS	B BARS	C BARS	D BARS	D-BARS: d	b
2:1 SLOPES	24	6.28	2.44	46	1.96	0.278	6'-0"	8'-10"	10'-0"	3'-0"	1'-11"	2'-3"	5'-0"	4'-6"	3'-10"	1'-6"	1'-0"	5/8"ø	8'-6"	3'-2"	3'-0"	4'-8"	2'-5"	2'-3"
	30	9.82	3.18	53	2.28	0.345	7'-5"	10'-3"	11'-9"	3'-7"	2'-0"	2'-9"	5'-6"	5'-0"	4'-1"	1'-6"	1'-3"	5/8"ø	9'-11"	3'-9"	3'-7"	5'-3"	2'-6"	2'-9"
	36	14.14	3.99	61	2.69	0.414	8'-10"	11'-8"	13'-7"	4'-2"	2'-1"	3'-3"	6'-0"	5'-6"	4'-4"	1'-6"	1'-6"	5/8"ø	11'-4"	4'-3"	4'-1"	5'-10"	2'-8"	3'-2"
	42	19.24	5.43	161	3.22	0.482	10'-3"	13'-1"	15'-6"	5'-1"	2'-2"	4'-0"	6'-9"	6'-3"	4'-10"	1'-9"	1'-9"	3/4"ø	12'-9"	5'-3"	4'-11"	7'-10"	3'-10"	4'-0"
	48	25.13	6.53	180	3.64	0.549	11'-8"	14'-6"	17'-3"	5'-9"	2'-3"	4'-6"	7'-3"	6'-9"	5'-1"	1'-9"	2'-0"	3/4"ø	14'-2"	5'-11"	5'-7"	8'-5"	3'-10"	4'-7"
	54	31.81	7.76	197	4.00	0.618	13'-1"	15'-11"	19'-1"	6'-4"	2'-4"	5'-0"	7'-9"	7'-3"	5'-4"	1'-9"	2'-3"	3/4"ø	15'-7"	6'-7"	6'-1"	9'-2"	4'-1"	5'-1"
	60	39.27	9.10	214	4.45	0.685	14'-6"	17'-4"	20'-10"	6'-11"	2'-5"	5'-6"	8'-3"	7'-9"	5'-8"	1'-9"	2'-6"	3/4"ø	17'-0"	7'-1"	6'-8"	9'-9"	4'-1"	5'-8"
	66	47.52	10.56	232	4.84	0.752	15'-11"	18'-9"	22'-5"	7'-8"	2'-6"	6'-0"	8'-9"	8'-3"	5'-11"	1'-9"	2'-9"	3/4"ø	18'-5"	7'-8"	7'-3"	10'-5"	4'-2"	6'-3"
	72	56.55	12.28	249	5.25	0.821	17'-4"	20'-2"	24'-2"	8'-2"	2'-7"	6'-6"	9'-3"	8'-9"	6'-3"	1'-9"	3'-0"	3/4"ø	19'-10"	8'-3"	7'-10"	11'-0"	4'-3"	6'-9"
4:1 SLOPES	24	6.28	3.05	53	2.29	0.278	6'-0"	8'-10"	10'-0"	3'-11"	2'-1"	3'-2"	5'-0"	4'-9"	4'-3"	1'-6"	1'-0"	5/8"ø	8'-6"	4'-3"	4'-0"	5'-6"	2'-6"	3'-0"
	30	9.82	3.92	61	2.70	0.345	7'-5"	10'-3"	11'-9"	4'-8"	2'-2"	3'-9"	5'-6"	5'-3"	4'-7"	1'-6"	1'-3"	5/8"ø	9'-11"	5'-0"	4'-8"	6'-3"	2'-8"	3'-7"
	36	14.14	5.09	70	3.15	0.414	8'-10"	11'-8"	13'-7"	5'-5"	2'-3"	4'-5"	6'-0"	5'-9"	5'-0"	1'-6"	1'-6"	5/8"ø	11'-4"	5'-9"	5'-4"	7'-1"	2'-10"	4'-3"
	42	19.24	6.97	185	3.78	0.482	10'-3"	13'-1"	15'-6"	6'-7"	2'-5"	5'-4"	6'-9"	6'-6"	5'-6"	1'-9"	1'-9"	3/4"ø	12'-9"	6'-11"	6'-5"	9'-3"	4'-0"	5'-3"
	48	25.13	8.44	204	4.24	0.549	11'-8"	14'-6"	17'-3"	7'-4"	2'-6"	6'-0"	7'-3"	7'-0"	5'-11"	1'-9"	2'-0"	3/4"ø	14'-2"	7'-8"	7'-1"	10'-1"	4'-2"	5'-11"
	54	31.81	10.13	225	4.74	0.618	13'-1"	15'-11"	19'-1"	8'-2"	2'-7"	6'-9"	7'-9"	7'-6"	6'-3"	1'-9"	2'-3"	3/4"ø	15'-7"	8'-6"	7'-10"	10'-11"	4'-3"	6'-8"
	60	39.27	11.90	245	5.23	0.685	14'-6"	17'-4"	20'-10"	8'-11"	2'-8"	7'-4"	8'-3"	8'-0"	6'-7"	1'-9"	2'-6"	3/4"ø	17'-0"	9'-3"	8'-8"	11'-9"	4'-4"	7'-5"
	66	47.52	13.87	266	5.74	0.752	15'-11"	18'-9"	22'-5"	9'-8"	2'-9"	8'-0"	8'-9"	8'-6"	7'-0"	1'-9"	2'-9"	3/4"ø	18'-5"	10'-0"	9'-5"	12'-8"	4'-7"	8'-1"
	72	56.55	16.13	283	6.29	0.821	17'-4"	20'-2"	24'-2"	10'-6"	2'-10"	8'-8"	9'-3"	9'-0"	7'-4"	1'-9"	3'-0"	3/4"ø	19'-10"	10'-10"	9'-9"	13'-5"	4'-8"	8'-9"

CONCRETE HEADWALLS w/45° WINGS FOR TWIN R.C. PIPE

S:\DWG\DETAILS\603-4 Concrete Headwall With 45.DWG

NOT TO SCALE

FIGURE 603-4

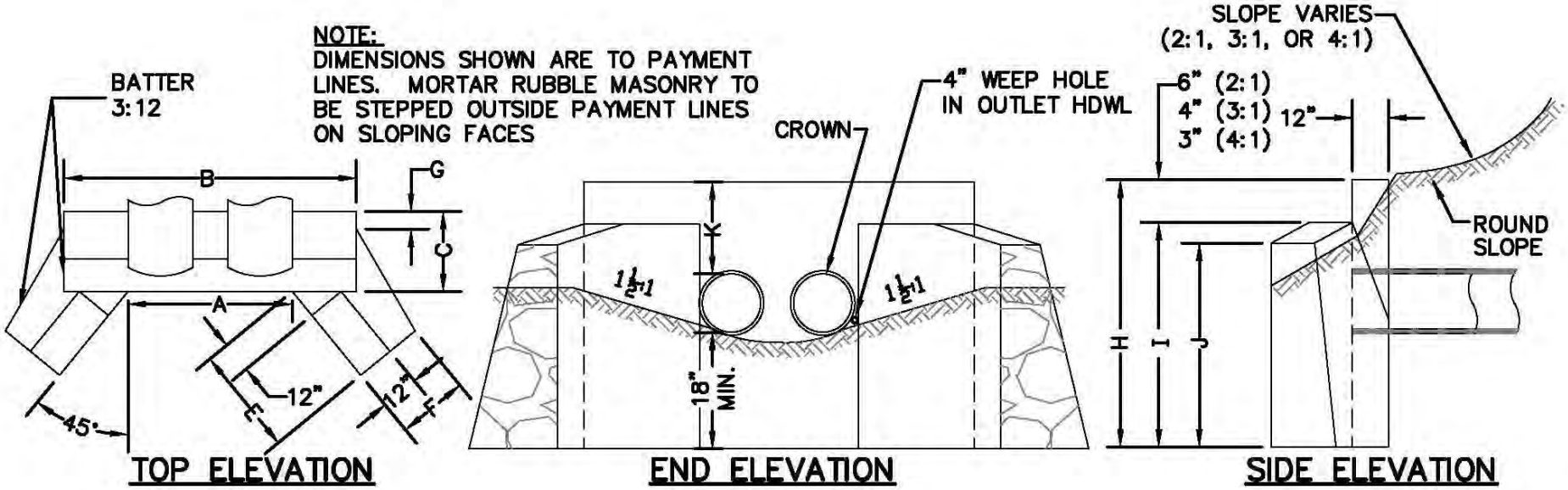

2:1 SLOPES

DIAM. D INCHES	AREA OF PIPE SQ. FT.	QUANTITIES IN CUBIC YARDS					DIMENSIONS									
		PER HEADER				PIPE EXC. PER 1' DEPTH 1' LENGTH	A	B	C	E	F	G	H	I	J	K
		M.R.M. V = 5'	M.R.M./FT. ADD LENGTH	EXC. FOR 1' DEPTH V = 5'	EXC./FT. ADD LENGTH											
24	6.28	4.40	.300	3.08	0.157	0.426	10'–0"	12'–10"	2'–3"	2'–11"	1'–11"	0'–6"	5'–0"	4'–6"	3'–10"	1'–6"
30	9.82	5.56	.348	3.60	0.163	0.485	11'–2"	14'–0"	2'–5"	3'–6"	2'–0"	0"–5"	5'–6"	5'–0"	4'–1"	1'–6"
36	14.14	6.71	.389	4.03	0.167	0.543	12'–4"	15'–2"	2'–6"	4'–1"	2'–1"	0'–4"	6'–0"	5'–6"	4'–4"	1'–6"
42	19.24	8.75	.458	4.68	0.173	0.602	13'–6"	16'–4"	2'–8"	5'–0"	2'–2"	0'–3"	6'–9"	6'–3"	4'–10"	1'–9"
48	25.13	10.43	.515	5.29	0.179	0.660	14'–8"	17'–6"	2'–10"	5'–8"	2'–3"	0'–2"	7'–3"	6'–9"	5'–1"	1'–9"
54	31.81	12.07	.562	5.85	0.182	0.719	15'–10"	18'–8"	2'–11"	6'–3"	2'–4"	0'–1"	7'–9"	7'–3"	5'–4"	1'–9"
60	39.27	14.09	.624	6.47	0.188	0.778	17'–0"	19'–10"	3'–1"	6'–10"	2'–5"	0'–1"	8'–3"	7'–9"	5'–8"	1'–9"
66	47.52	16.05	.675	7.03	0.191	0.836	18'–2"	21'–0"	3'–2"	7'–5"	2'–6"	0–0"	8'–9"	8'–3"	5'–11"	1'–9"
72	56.55	18.41	.742	7.63	0.198	0.895	19'–4"	22'–2"	3'–4"	8'–1"	2'–7"	0'–1"	9'–3"	8'–9"	6'–3"	1'–9"

MORTAR RUBBLE MASONRY HEADWALLS w/45° WINGS FOR TWIN R.C. PIPE

S:\DWG\DETAILS\603-5 Mortar Rubble With 45.DWG

NOT TO SCALE
FIGURE 603–5

3:1 SLOPE

DIAM. D INCHES	AREA OF PIPE SQ. FT.	QUANTITIES IN CUBIC YARDS					DIMENSIONS									
		PER HEADER				PIPE EXC. PER 1' DEPTH 1' LENGTH	A	B	C	E	F	G	H	I	J	K
		M.R.M. V = 5'	M.R.M./FT. ADD LENGTH	EXC. FOR 1' DEPTH V = 5'	EXC./FT. ADD LENGTH											
24	6.28	4.77	.300	3.27	0.157	0.426	10'–0"	12'–10"	2'–3"	3'–6"	2'–1"	0'–6"	5'–0"	4'–9"	4'–3"	1'–6"
30	9.82	6.08	.348	3.83	0.163	0.485	11'–2"	14'–0"	2'–5"	4'–3"	2'–2"	0'–6"	5'–6"	5'–3"	4'–7"	1'–6"
36	14.14	7.38	.389	4.34	0.167	0.543	12'–4"	15'–2"	2'–6"	4'–11"	2'–3"	0'–4"	6'–0"	5'–9"	5'–0"	1'–6"
42	19.24	9.72	.458	5.06	0.173	0.602	13'–6"	16'–4"	2'–8"	6'–0"	2'–5"	0'–3"	6'–9"	6'–6"	5'–6"	1'–9"
48	25.13	11.59	.515	5.69	0.179	0.660	14'–8"	17'–6"	2'–10"	6'–8"	2'–6"	0'–3"	7'–3"	7'–0"	5'–11"	1'–9"
54	31.81	13.52	.562	6.27	0.182	0.719	15'–10"	18'–8"	2'–11"	7'–5"	2'–7"	0'–2"	7'–9"	7'–6"	6'–3"	1'–9"
60	39.27	15.80	.624	6.92	0.188	0.778	17'–0"	19'–10"	3'–1"	8'–1"	2'–8"	0'–1"	8'–3"	8'–0"	6'–7"	1'–9"
66	47.52	18.10	.675	7.58	0.191	0.836	18'–2"	21'–0"	3'–2"	8'–10"	2'–9"	0'–0"	8'–9"	8'–6"	7'–0"	1'–9"
72	56.55	20.80	.742	8.26	0.198	0.895	19'–4"	22'–2"	3'–4"	9'–6"	2'–10"	0'–0"	9'–3"	9'–0"	7'–4"	1'–9"

4:1 SLOPE

DIAM. D INCHES	AREA OF PIPE SQ. FT.	QUANTITIES IN CUBIC YARDS					DIMENSIONS									
		PER HEADER				PIPE EXC. PER 1' DEPTH 1' LENGTH	A	B	C	E	F	G	H	I	J	K
		M.R.M. V = 5'	M.R.M./FT. ADD LENGTH	EXC. FOR 1' DEPTH V = 5'	EXC./FT. ADD LENGTH											
24	6.28	5.01	.300	3.39	0.157	0.426	10'–0"	12'–10"	2'–3"	3'–10"	2'–1"	0'–6"	5'–0"	4'–9"	4'–3"	1'–6"
30	9.82	6.37	.348	3.94	0.163	0.485	11'–2"	14'–0"	2'–5"	4'–7"	2'–2"	0'–6"	5'–6"	5'–3"	4'–7"	1'–6"
36	14.14	7.79	.389	4.47	0.167	0.543	12'–4"	15'–2"	2'–6"	5'–4"	2'–3"	0'–4"	6'–0"	5'–9"	5'–0"	1'–6"
42	19.24	10.30	.458	5.25	0.173	0.602	13'–6"	16'–4"	2'–8"	6'–6"	2'–5"	0'–3"	6'–9"	6'–6"	5'–6"	1'–9"
48	25.13	12.34	.515	5.90	0.179	0.660	14'–8"	17'–6"	2'–10"	7'–3"	2'–6"	0'–3"	7'–3"	7'–0"	5'–11"	1'–9"
54	31.81	14.46	.562	6.52	0.182	0.719	15'–10"	18'–8"	2'–11"	8'–1"	2'–7"	0'–2"	7'–9"	7'–6"	6'–3"	1'–9"
60	39.27	16.85	.624	7.23	0.188	0.778	17'–0"	19'–10"	3'–1"	8'–10"	2'–8"	0'–1"	8'–3"	8'–0"	6'–7"	1'–9"
66	47.52	19.41	.675	7.89	0.191	0.836	18'–2"	21'–0"	3'–2"	9'–7"	2'–9"	0'–1"	8'–9"	8'–6"	7'–0"	1'–9"
72	56.55	22.26	.742	8.62	0.198	0.895	19'–4"	22'–2"	3'–4"	10'–5"	2'–10"	0'–0"	9'–3"	9'–0"	7'–4"	1'–9"

MORTAR RUBBLE MASONRY HEADWALLS w/45° WINGS FOR TWIN R.C. PIPE

S:\DWG\DETAILS\603-5 Mortar Rubble With 45.DWG

NOT TO SCALE
FIGURE 603–6

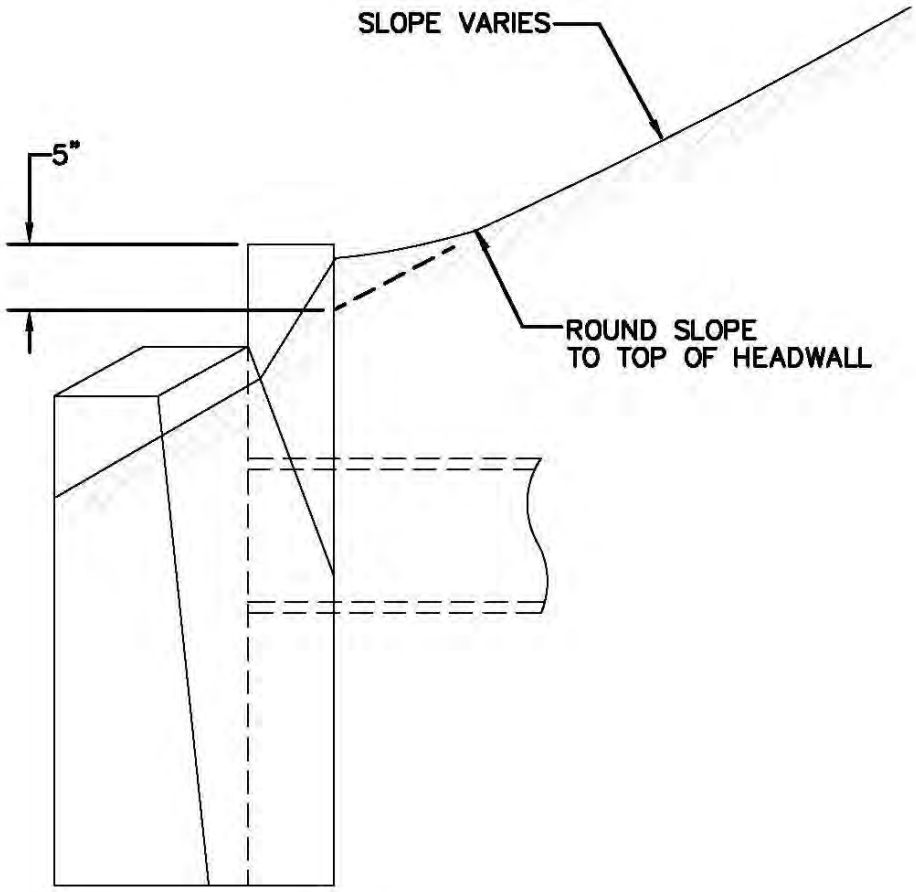

SIDE ELEVATION

SLOPE ROUNDING AT TOP OF CULVERT HEADWALL

S:\DWG\DETAILS\603-6 Slope Rounding.DWG

NOT TO SCALE

FIGURE 603-7

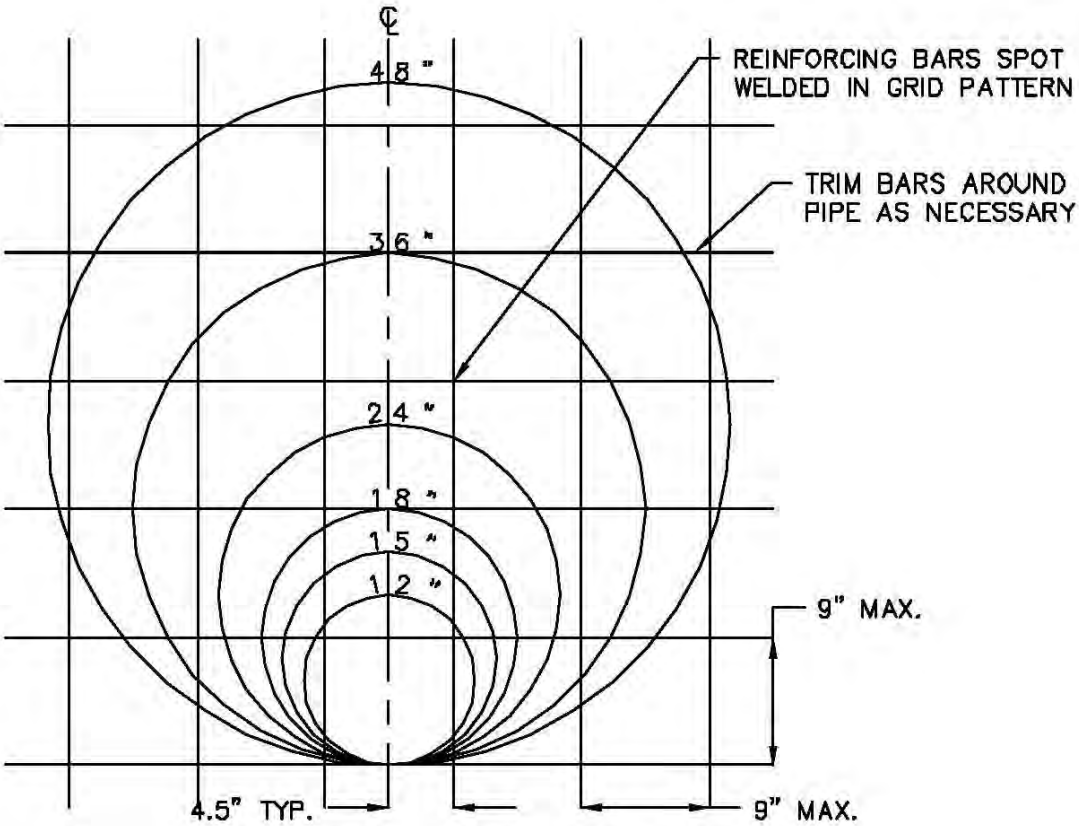

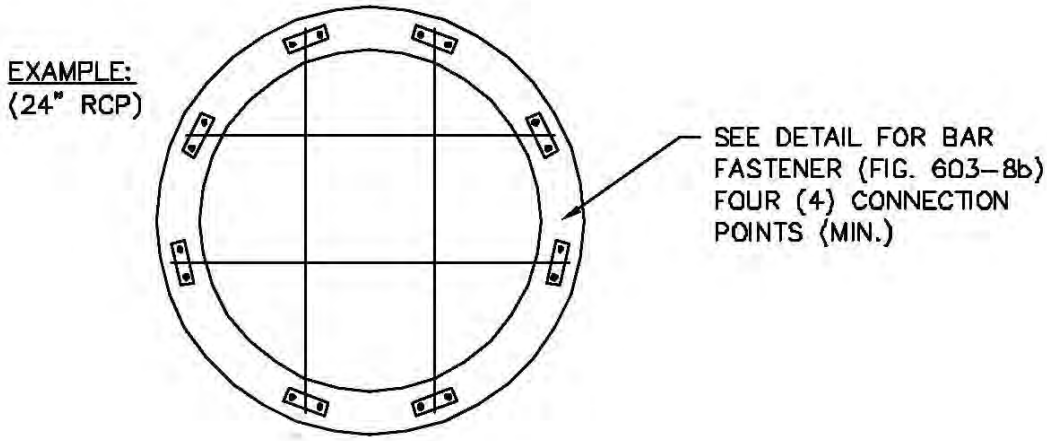

PROTECTION GRATE FOR PIPE OUTLETS

S:\DWG\DETAILS\603-8 OUTLET.DWG

NOT TO SCALE

FIGURE 603-8a

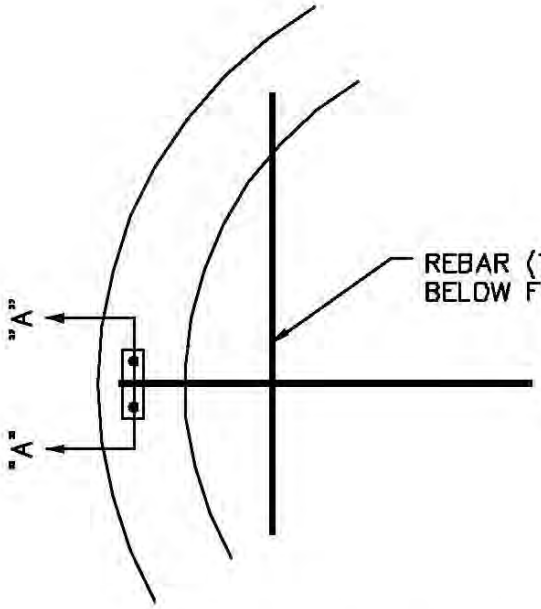

BAR FASTENER DETAIL

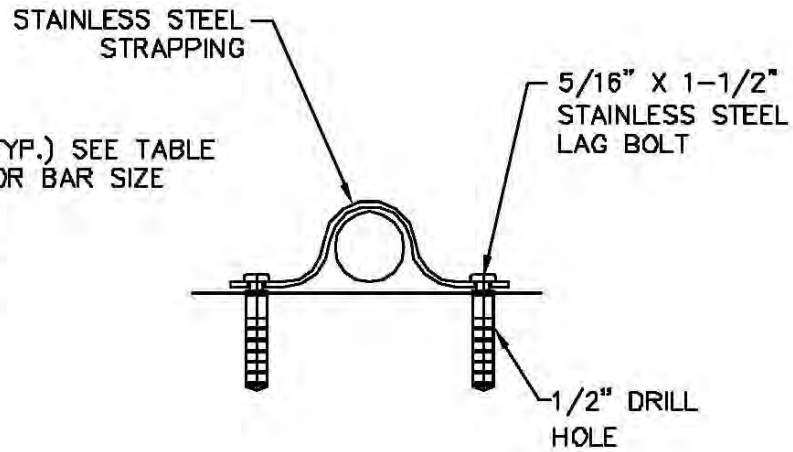

SECTION A – A

PIPE DIAMETER	BAR SIZE
12"	#3 BARS FOR ALL BARS
15"	#4 BARS FOR ALL BARS CONNECTED TO PIPE, #3 BARS FOR OTHERS.
18"	#4 BARS FOR ALL BARS CONNECTED TO PIPE, #3 BARS FOR OTHERS.
24"	#5 BARS FOR ALL BARS CONNECTED TO PIPE, #3 BARS FOR OTHERS.
36"	#8 BARS FOR ALL BARS CONNECTED TO PIPE, #5 BARS FOR OTHERS.
48"	#11 BARS FOR ALL BARS CONNECTED TO PIPE, #8 BARS FOR OTHERS.

FOR CONNECTION TO REINFORCED CONCRETE PIPE OR HEADWALL:

FOR PIPE SIZES SIZES OF 24" OR SMALLER, USE 1/2" DIAMETER 1-1/2" LONG LAG BOLT EXPANSION SHIELDS.

FOR PIPE SIZES OVER 24", USE 1" DIA. 3" LONG LAG BOLT EXPANSION SHIELDS.

PROVIDE FOUR (4) CONNECTION POINTS (MIN.)

PROTECTION GRATE FOR PIPE OUTLETS

S:\DWG\DETAILS\603-8 OUTLET.DWG

NOT TO SCALE
FIGURE 603-8b

SECTION 604 --CATCH BASINS, DROP INLETS AND DRAIN MANHOLES

Description

1.1 This work shall consist of furnishing and installing or reconstructing catch basins, drop inlets and drain manholes; and furnishing, placing or adjusting grates or manhole covers all as shown on the plans or as ordered. Common structure excavation to the depth specified in 206.4.1, bedding if required, and backfill shall be included in this work.

1.1.1 Surfaces of drainage structures shall be completely coated with water repellent inside and outside for new structures and existing structures shall be coated on the inside above the flow line unless directed otherwise.

Materials

2.1 General.

2.1.1 Catch basins, drop inlets and drain manholes and related appurtenances shall be precast concrete. Brick masonry and barrel block construction will not be allowed.

2.1.1.1 Cone and transition sections shall be of the eccentric type.

2.1.1.2 Catch basins sumps shall be a minimum of 36 inches deep.

2.1.1.3 Base sections shall be monolithic to a point no less than 6 inches above the crown of the incoming pipe.

2.1.1.4 Joints shall be tongue and groove type and shall be sealed watertight with an approved rubber or bitumastic sealant.

2.1.1.5 The name of the manufacturer and the date of manufacture shall be clearly marked on each precast section.

2.2 Reinforcement shall be steel, or structural fibers. Steel shall conform to the requirements of Section 544. Fibers shall only be utilized in structures with 4 ft or less inside diameter and shall be as listed on the New Hampshire Department of Transportation's current Qualified Products List.

2.3 Precast concrete sections shall conform to AASHTO M 199. The concrete shall be Class AA, meeting requirements of Section 520 except as noted herein.

2.3.1 Except for components cast using the dry cast process, precast concrete components shall not have the forms removed until a minimum compressive strength of 2000 psi has been achieved. Once initial set of the concrete has occurred, precast components shall not be moved until a minimum compressive strength of 2000 psi has been achieved. Concrete cylinders shall be made, in accordance with AASHTO T 23, at the last placement of the day.

2.3.2 Curing of precast sections.

2.3.2.1 All precast concrete units shall be coated with a white pigmented curing compound before being stored outside. The membrane curing compounds used under this method shall be Type 2 (white pigmented) Class B conforming to AASHTO M 148 and must appear on the New Hampshire Department of Transportation's current Qualified Products List. The compound shall be properly agitated immediately before each use. A minimum coverage rate of 1 gallon per 200 square feet shall be used.

2.3.2.1.1 Where concrete is to be bonded with fresh concrete or coatings applied, curing compound shall be removed.

2.3.2.2 Prior to placement of the curing compound, all precast concrete units shall be subjected to curing by any one of the methods described below. The manufacturer shall provide minimum/maximum temperature thermometers to monitor curing temperatures unless otherwise specified. If, at any time, curing temperatures fall below the specified minimum for the chosen curing method, the curing period shall be increased accordingly. No unit shall be subjected to freezing temperatures until eighty percent of the specified 28 day compressive strength has been reached.

2.3.2.3 Units which are exposed to freezing before reaching the required 28 day compressive strength may require additional testing for compressive strength, as directed by the Engineer. Additional testing, when required, will be performed on cores taken from the hardened concrete.

2.3.2.4 Steam Curing. The units shall be cured in a suitable enclosure. The enclosure shall be designed to minimize the loss of heat and moisture while allowing for the uniform circulation of steam around the entire unit. The interior surfaces of the enclosure and the surface of the unit shall be moist at all times. Steps shall be taken to prevent localized "hot spots" caused by the steam lines. The enclosure shall be free from outside drafts.

2.3.2.4.1 Steam curing shall not begin until a preset period has been completed. The preset period begins when the last concrete has been placed and continues until the concrete obtains initial set. Prior written approval from the Engineer is required when preset periods of less than two hours are to be used.

2.3.2.4.2 During the preset period, moderate heat may be applied to the enclosure to maintain the initial temperature of the concrete. The maximum temperature inside the enclosure during the preset period shall be the initial temperature of the concrete, plus 9 º F.

2.3.2.4.3 After the preset period is complete, steam shall be injected into the curing enclosure. The temperature inside the enclosure shall not be increased at a rate greater than 36 degrees F per hour. A moist atmosphere will be maintained at a temperature

between 104 degrees F and 185 degrees F for a period of not less than 12 hours. The temperature inside the enclosure shall then be decreased at a rate not exceeding 36 degrees F per hour until the ambient temperature outside the enclosure is reached. The manufacturer shall provide automatic temperature recorders to continuously record the curing temperature inside the enclosure. The concrete strength shall be determined by testing cylinders cured in the same environment as the concrete they represent.

2.3.2.5 Water Spray Curing. Curing shall begin as soon as the concrete has hardened sufficiently to prevent surface damage from the water spray. All exposed surfaces of the precast unit shall be kept wet with a continuous fine spray of water in an enclosure maintained at a temperature of not less than 68 degrees F for 72 hours or until 80% of the 28 day compressive strength is reached. The concrete strength shall be determined by testing cylinders cured using the water spray method and kept in the same environment as the concrete they represent.

2.3.2.6 Saturated Cover Curing. The saturated covers used under this method shall be burlap, meeting the requirements of 520.2.6.1. Curing shall begin as soon as the concrete has hardened sufficiently to prevent surface damage from the saturated burlap. All exposed concrete surfaces on the precast unit shall be covered with burlap, saturated with water before applying. The burlap will be kept saturated and the units kept at a temperature of not less than 68 º F for 72 hours or until 80% of the 28 day compressive strength is reached. The concrete strength shall be determined by testing cylinders cured using the saturated cover method and kept in the same environment as the concrete they represent. Additional curing time may be necessary to meet the strength requirements.

2.3.2.7 Moisture Retention Curing. Units cured in accordance with these methods shall be maintained at a minimum temperature of 50 º F for 7 days or until 80% of the 28 day compressive strength has been reached. Additional curing time may be necessary to meet the strength requirements. The concrete strength shall be determined by testing cylinders cured in the same environment as the concrete they represent. Moisture retention curing shall be accomplished by either of the following 2 methods.

2.3.2.7.1 Membrane Curing Compound.

2.3.2.7.1.1 The membrane curing compound shall be applied to the concrete surface after finishing, as soon as the free water on the surface has disappeared and no water sheen is visible, but not so late that the liquid curing compound will be absorbed into the concrete. When curing compound cannot be applied within the above requirements, the manufacturer shall instead immediately begin curing the unit in accordance with one of the other curing methods contained in this specification, until curing compound can be applied. When curing compound is to be used in conjunction with any other method of cure, the Engineer shall be notified prior to the start of production. When this method is used in conjunction with the dry cast process, the curing room shall be kept at 100% humidity until a minimum compressive strength of 2000 psi has been obtained.

2.3.2.7.1.2 When the forms are removed prior to 7 days, the exposed concrete surfaces shall be wet with water within one half hour of form removal and shall be kept wet until the curing compound is applied. Before application, the concrete shall be allowed to reach a uniformly damp appearance with no free water on the surface, and then the compound shall be applied immediately.

2.3.2.7.1.3 This method of curing shall not be used on any concrete surface that is to have plastic concrete bonded to it. Another approved method of curing shall be used when this condition exists.

2.3.2.7.2 Curing Covers.

2.3.2.7.2.1 The curing covers used under this method shall conform to AASHTO M 171. Curing covers shall be placed immediately following the finishing operation or form removal, whichever is applicable. Care shall be taken not to damage any exposed concrete surfaces during cover placement. Curing covers shall be placed and secured and be of such condition as to minimize the loss of moisture and temperature. When it is necessary to use more than one curing cover, the edges shall be lapped a minimum of 12 in.

2.4 Clay brick shall conform to the requirements of AASHTO M 91, Grade MS. The use of concrete brick will not be permitted.

2.5 Concrete masonry units shall conform to the requirements of ASTM C139 and shall have a minimum compressive strength of 3,000 psi when tested by the method of AASHTO T 140.

2.6 Cement mortar shall conform to the requirements of Section 707 .

2.7 Non-shrinking mortar shall be Hallemite, Waterplug, Embecco or an approved equal.

2.8 Castings shall be gray iron conforming to AASHTO M306. Unless otherwise specified, all gray iron castings shall be Class 30. Castings shall be proof load tested.

2.9 The word “DRAIN” in 3 inch letters shall be plainly cast in the center of each cover.

2.10 Joints shall be sealed watertight with an approved rubber or bitumastic sealant conforming to ASTM C 32.

2.11 Bedding and backfill material shall conform to the requirements of Section 209.

2.12 Water repellent shall conform to 534.2.1

2.13 Prefabricated adjustment rings for catch basins, drop inlets and manholes shall conform with 2.5.

2.14 Polyethylene liner material shall conform to the requirements of AASHTO M 294, Section 6.0, but not have a wall thickness less than 1/4 inch.

Construction Requirements

3.1 Excavation shall conform to the requirements of Section 206 .

3.2 Bedding and backfill shall conform to the requirements of Section 209.

3.3 Precast concrete sections shall be at least 10 days old when delivered to the construction site.

3.4 Catch basins, drop inlets and drain manholes shall be placed at the designated locations on a prepared foundation so that the flow lines of the pipes entering and exiting, will conform to the required grades.

3.5 The Contractor shall provide for the temporary diversion of water in order to permit the installation of drainage structures in a reasonably dry trench unless otherwise permitted by the Engineer.

3.6 Drain manholes shall have concrete inverts and shelves conforming to one-half of the diameter of the largest pipe. At changes in direction, the inverts shall be laid out in curves of the longest radius possible tangent to the center line of the drain pipes. Shelves shall slope towards the invert channels at a rate of 1/2 inch per foot.

3.7 Concrete construction shall conform to the requirements of structural concrete. Masonry shall conform to the requirements for the respective type. Mortar joints shall be full martar joints not more than ½ inch wide. Exposed joints shall be neatly finished. Masonry shall fit neatly and tightly around the pipe.

3.7.1 Reinforced precast sections shall not be shipped from the manufacturing facility until the eighth day from the date of manufacture, except when the supplier provides test results demonstrating that the design strength has been achieved.

3.8 All lifting holes and pipe to drainage structure joints shall be neatly sealed watertight with non-shrinking mortar.

3.9 Prior to installation and adjustment of grates, covers and frames, the tops of drainage structures shall be temporarily covered to prevent accidental entry.

3.10 In accordance with the provisions of AASHTO M 105, 17.2, following are the "other matters of workmanship and finish" required: frames and grates or frames and covers shall be matched before being incorporated into the work. Grates and covers shall make full and even bearing on the underlying surface to fit into the frames without rocking.

3.11 Structures within the limits of bituminous concrete pavement shall be temporarily set at the elevation of the bottom of the binder course, or as ordered. After the binder course has been

compacted, these structures shall be set at their final grade. Backfill necessary around such structures after the base course has been completed, shall be made with Class AA concrete unless otherwise ordered.

3.11.1 Brick or precast concrete rings shall be used to adjust frames to grade. The maximum allowable adjustment shall be 12 inches.

3.11.2 Frames shall be set on a full bed of mortar to ensure a watertight fit. They shall be set true to grade and fully aligned with the masonry opening.

3.11.3 A mortar fillet extending to the outer edge of the masonry a minimum of 1 inch thick, shall be constructed around the frame in such a manner as to shed water.

3.12 When reconstruction of existing structures is specified, the frames, covers and gratings shall be removed and the walls reconstructed as required. The frames shall be cleaned and reset at the required elevations.

3.12.1 Structures specified to be adjusted shall be built up to the required grade according to the requirements of 3.11.

3.13 Catch basin frames and grates at curb line shall be set at grade to ensure that surrounding pavement area will create positive drainage toward the catch basin. Refer to Figure 604- 8.

3.14 When connections to existing drainage structures are specified, the openings shall be cored and the pipe to structure joints neatly and tightly sealed.

3.15 Upon completion, each drainage structure shall be cleaned of silt, debris, or other matter of any kind and shall be kept clean until Acceptance of the Work.

3.16 Surface preparation for drainage structures to be treated with water repellent shall be sufficient to remove dust, dirt, oil, wax, other coatings, effloresence and other foreign materials. All surfaces shall be dry prior to the application of water repellent.

3.16.1 Treatment shall be performed in accordance with the other applicable provisions of Section 534 .

3.17 Polyethylene liners shall be manufactured and installed in accordance with the details in this Section.

Method of Measurement

4.1 Catch basins, drop inlets and drain manholes will be measured by the vertical foot to the nearest 0.1 of a foot, from the bottom of the metal frame (or the top of the concrete cover) to the top of the floor slab of the structure.

4.2 Reconstructing catch basins, drop inlets or manholes will be measured to the nearest 0.1 of a

foot, vertically to the nearest 0.1 of a foot, between the bottom of the metal frame to the top of undisturbed portion of the existing structure.

4.3 Grates or manhole covers will be measured by the number of units installed. A cover and frame will be a unit and a grate and frame will be a unit.

4.4 Adjusting grates or covers and frames or replacing rectangular concrete slab tops which have been set by others will be measured by the number of units adjusted.

4.5 Connecting existing drainage structures will be measured by the number of units connected.

4.6 Water repellent for existing drainage structures will be measured by the each for the number of drainage structures ordered to be treated.

4.7 Polyethylene liners will be measured by number of each installed.

Basis of Payment

5.1 The accepted quantities of catch basins, drop inlets and drain manholes of the diameter specified, will be paid for at the contract unit price per vertical foot. Which price shall constitute full compensation for excavation (except rock), backfill, bedding and furnishing all materials, tools, equipment, labor and incidentals needed to complete the work, with the following stipulations:

5.1.1 All rock structure excavation and any excavation of unsuitable material required below the specified grade will be paid for as provided in Section 206 . Over excavation for bedding proposed in ledge and backfill for said over excavation will be subsidiary.

5.1.2 When the depth of excavation for a catch basin, drop inlet or manhole is increased more than one foot by lowering the grade, additional excavation will be paid for as provided in Section 206 .

5.1.3 Granular backfill material necessary for the replacement of unsuitable material removed below the specified grade will be paid for as provided in Section 209. Granular backfill necessary for the replacement of overexcavated ledge will be subsidiary.

5.1.4 No extra compensation will be made for structures constructed in accordance with 3.11.

5.1.5 Water repellent for new drainage structures will be subsidiary.

5.2 The accepted quantities of connecting existing drainage structures will be paid for at the contract unit price per each existing structure connected complete in place, which price shall constitute full compensation for furnishing all materials, tools, equipment, labor and incidentals needed to complete the work.

5.2.1 No payment will be made for reconstructing portions of the above structures which are unnecessarily disturbed.

5.2.2 No separate payment will be made for excavation for reconstructing the above structures.

5.3 The accepted quantities of grates and frames or manhole covers and frames or of adjusting grates and covers and frames or of replacing rectangular concrete slab tops which have been set by others will be paid for at the contract unit price per each complete in place, which price shall constitute full compensation for excavation, backfill and furnishing all materials, tools, equipment, labor and incidentals needed to complete the work.

5.4 Temporary diversion of water including trenching or pumping directly from the trench or sumps shall be subsidiary to the drain structure installation. When well points or other specific dewatering devices are requested or ordered, they will be paid as shown or as extra work.

5.5 The accepted quantities of water repellent for existing drainage structures will be paid for at the contract unit price per each complete structure.

5.5.1 No separate payment will be made for surface preparation.

5.6 The accepted quantities of polyethylene liner will be paid at the Contract unit price per each installed complete in place.

Pay Items and Units, Section 604 --Catch Basins, Drop Inlets And Drain Manholes:

Item Number			Unit
604	.A	Item Number	
604		Section Number	
	.A	Structure	
		B Diameter or Grate Type	
	.1	Catch Basins, ___ft Diameter	V.F.
	.2	Drop Inlets, ___ ft Diameter	V.F.
	.3	Drain Manhole, ___ ft Diameter	V.F.
	.4	Reconstructing Manholes, Catch Basins and Drop Inlets	V.F.
	.5	Adjusting Manhole Covers, Catch Basin and Drop Inlet Grates and Frames	Each
	.6	Drain Manhole Covers and Frames	Each
	.7	Polyethelyne Liners	Each
	.8	Grates and Frames, Type ___	Each
		1 Type A	
		2 Type B	
		3 Type C	
		4 Blank	
		5 Type E	
		6 Type F	
		7 Frames and Grates Furnished by Others	
		8 Special	
	.95	Water Repellent for Existing Catch Basins and Drop Inlets	Each

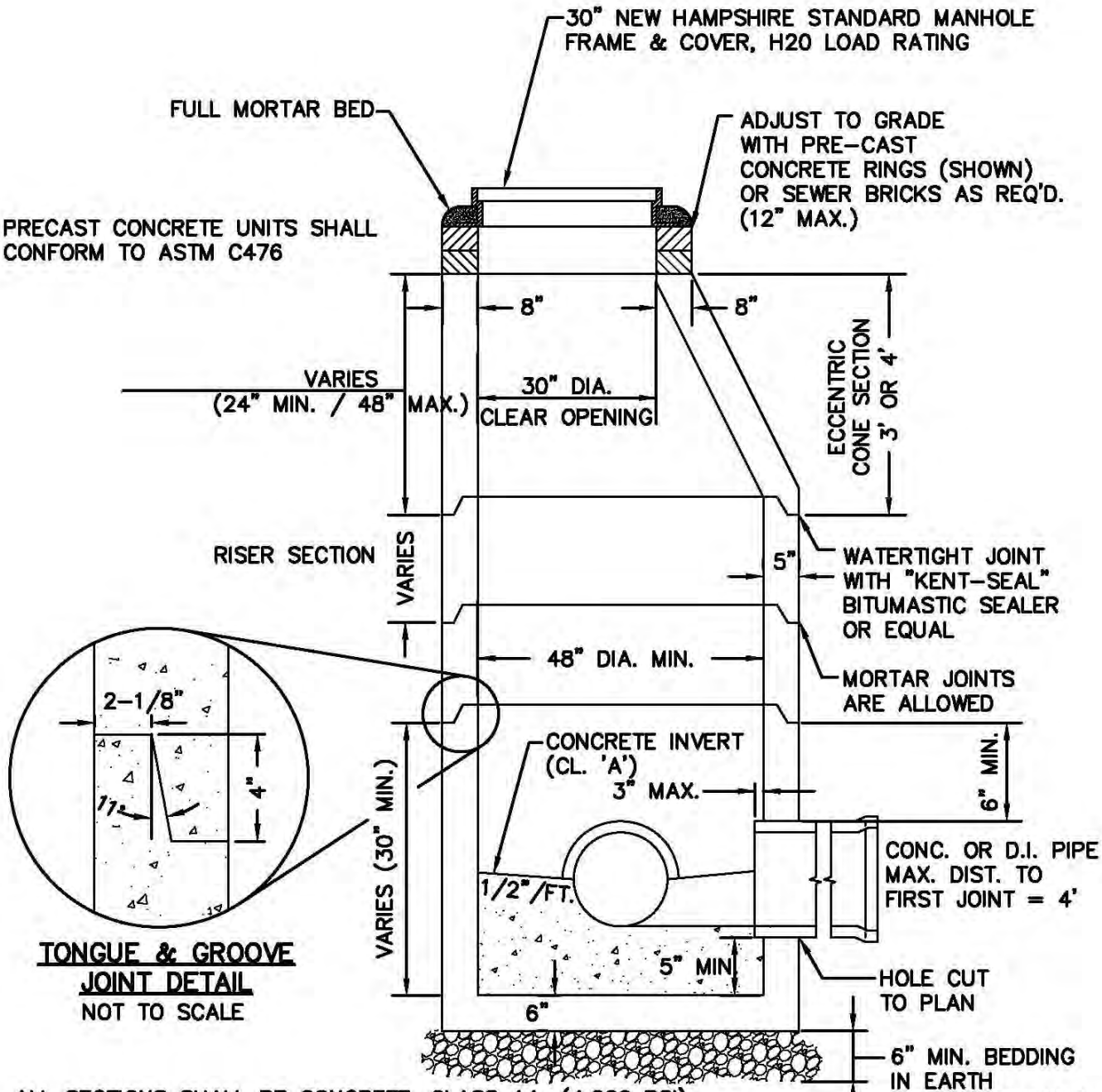

TONGUE & GROOVE JOINT DETAIL
NOT TO SCALE

ALL SECTIONS SHALL BE CONCRETE, CLASS AA, (4,000 PSI), CIRCUMFERENTIAL REINFORCEMENT SHALL BE 0.12 SQ. IN. PER L.F. IN ALL SECTIONS AND SHALL BE PLACED IN THE CENTER THIRD OF THE WALL.

THE TONGUE OR GROOVE OF THE JOINT SHALL CONTAIN ONE LINE OF CIRCUMFERENTIAL REINFORCEMENT EQUAL TO 0.12 SQ. IN. PER L.F.

RISERS OF 1'-4" MAY BE USED TO REACH THE DESIRED ELEVATION.

STEPS ARE NOT ALLOWED.

PRE-CAST REINFORCED CONCRETE DRAIN MANHOLE

S:\DWG\DETAILS\604-1 DMH.DWG

NOT TO SCALE
FIGURE 604-1

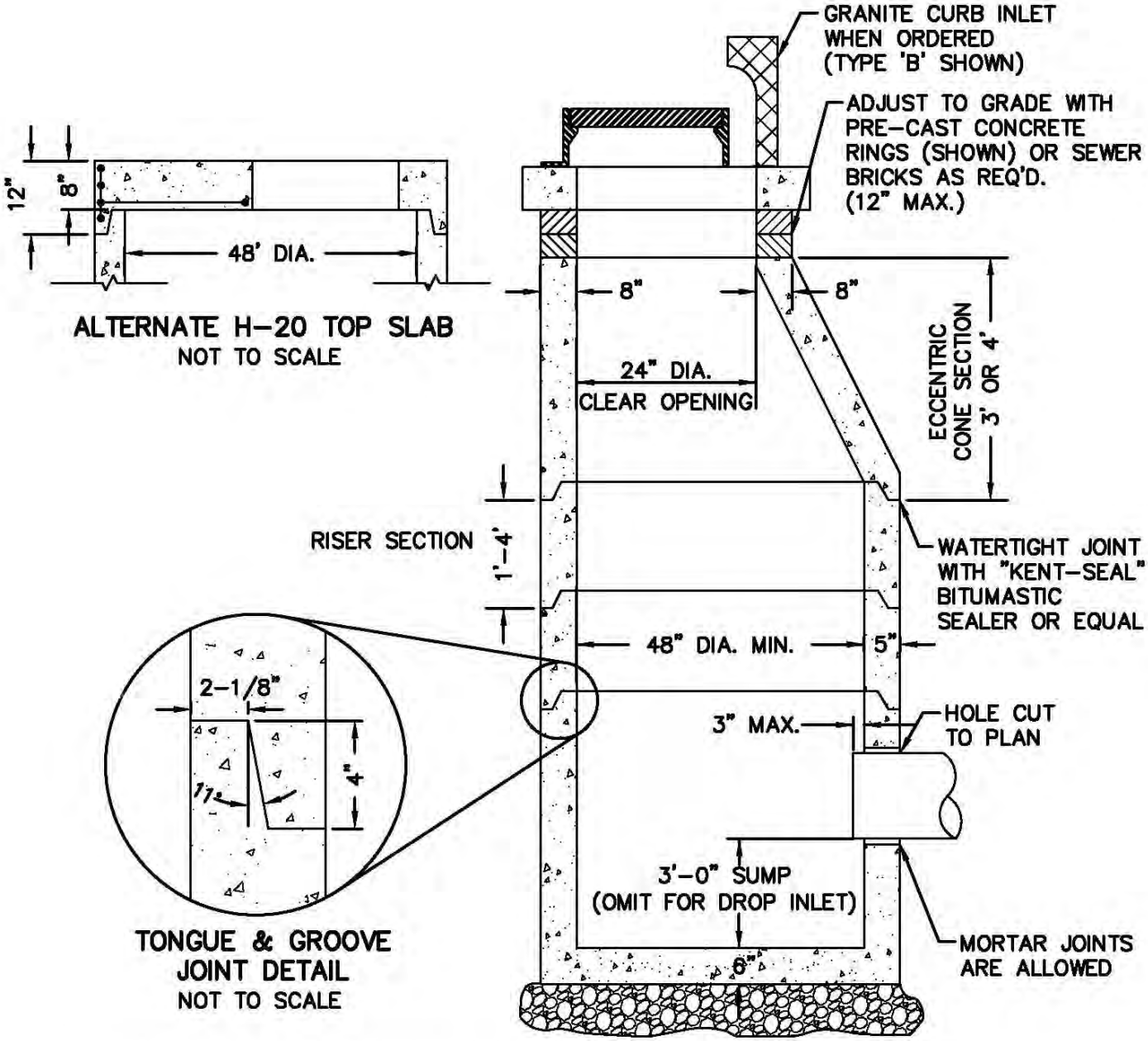

ALL SECTIONS SHALL BE CONCRETE, CLASS AA, (4,000 PSI), CIRCUMFERENTIAL REINFORCEMENT SHALL BE 0.12 SQ. IN. PER L.F. IN ALL SECTIONS AND SHALL BE PLACED IN THE CENTER THIRD OF THE WALL.

THE TONGUE OR GROOVE OF THE JOINT SHALL CONTAIN ONE LINE OF CIRCUMFERENTIAL REINFORCEMENT EQUAL TO 0.12 SQ. IN. PER L.F.

RISERS OF 1'-4' MAY BE USED TO REACH THE DESIRED ELEVATION.

STEPS ARE NOT ALLOWED.

A MINIMUM SUMP OF 1'-6" IS PERMITTED WITH APPROVAL FROM THE ENGINEER.

PRE-CAST REINFORCED CONCRETE CATCH BASIN & DROP INLET

NOT TO SCALE

FIGURE 604-2

NOTES:

SQUARE GRATE & FRAME (CAST IRON) HORIZONTAL BARS TO BE PARALLEL TO FLOW LINE.

GRIND GRATE CORNER TO PERMIT USE IN EXIST. $1\frac{1}{4}$" X $1\frac{1}{4}$" FILLETED FRAMES.

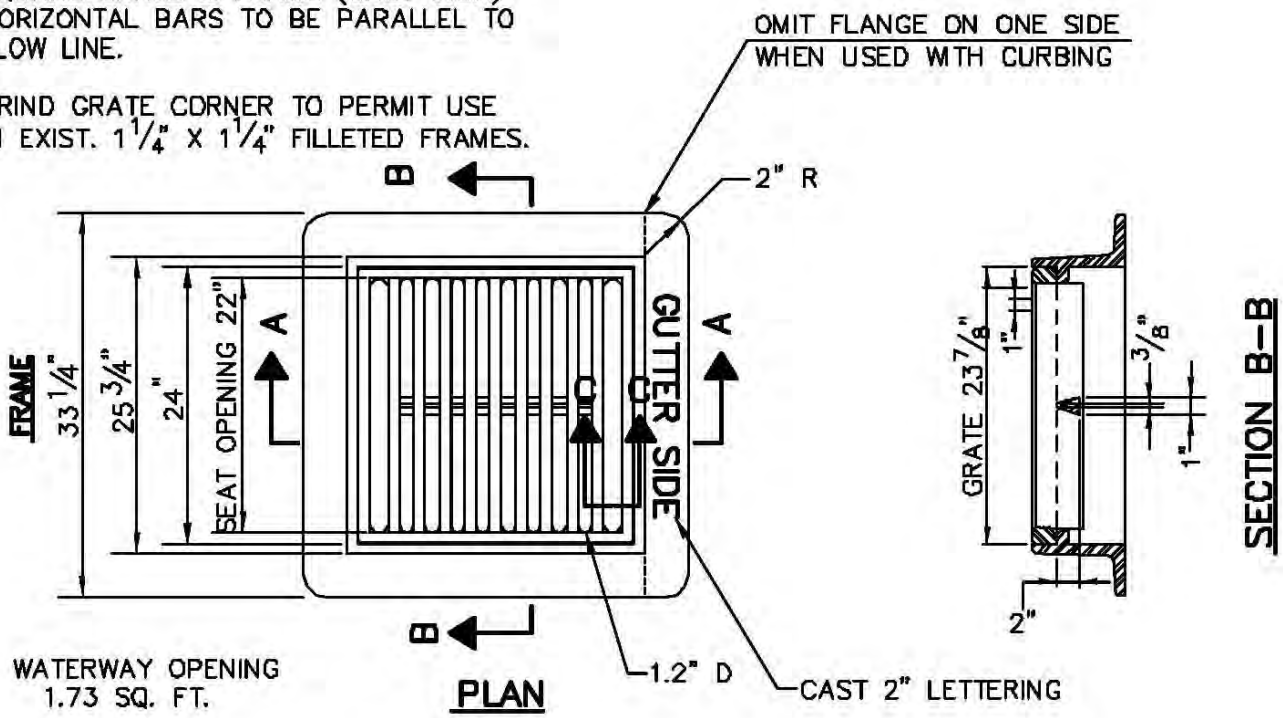

WATERWAY OPENING
1.73 SQ. FT.

PLAN

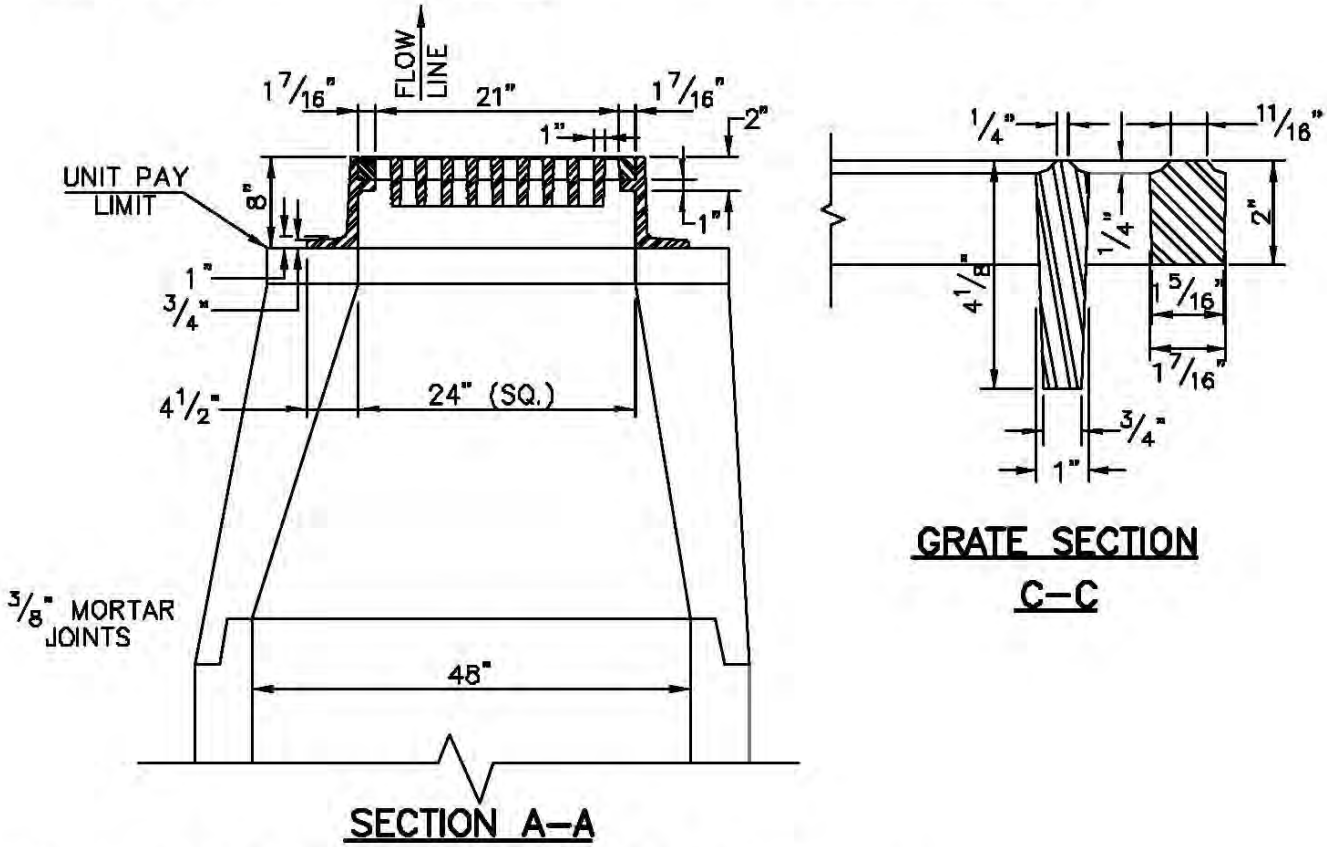

SECTION A–A

GRATE SECTION
C–C

NOTE: NOT TO BE USED WHEN BICYCLE TRAFFIC IS ANTICIPATED.

FRAME & GRATE TYPE 'A'

S:\DWG\DETAILS\604-3 FR&GRT-A.DWG

NOT TO SCALE
FIGURE 604–3

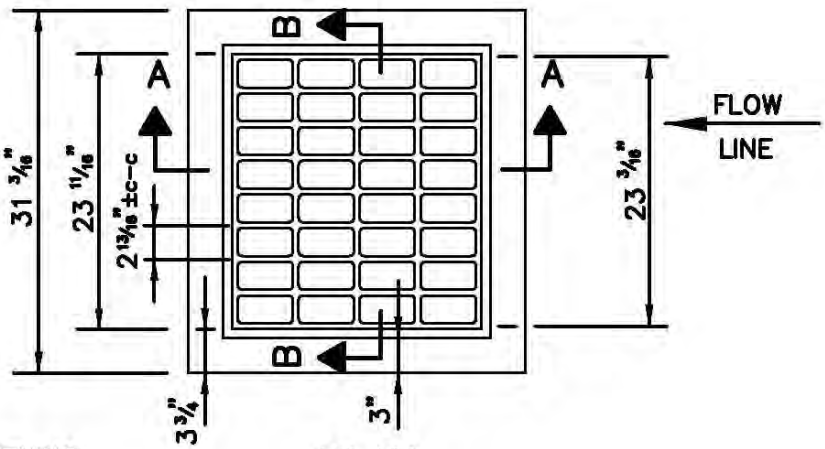

PLAN

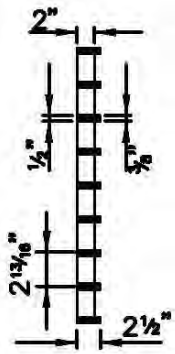

SECTION B–B

WATERWAY OPENING
2.55 SQ. FT.

GRATE TO BE
CAST IRON

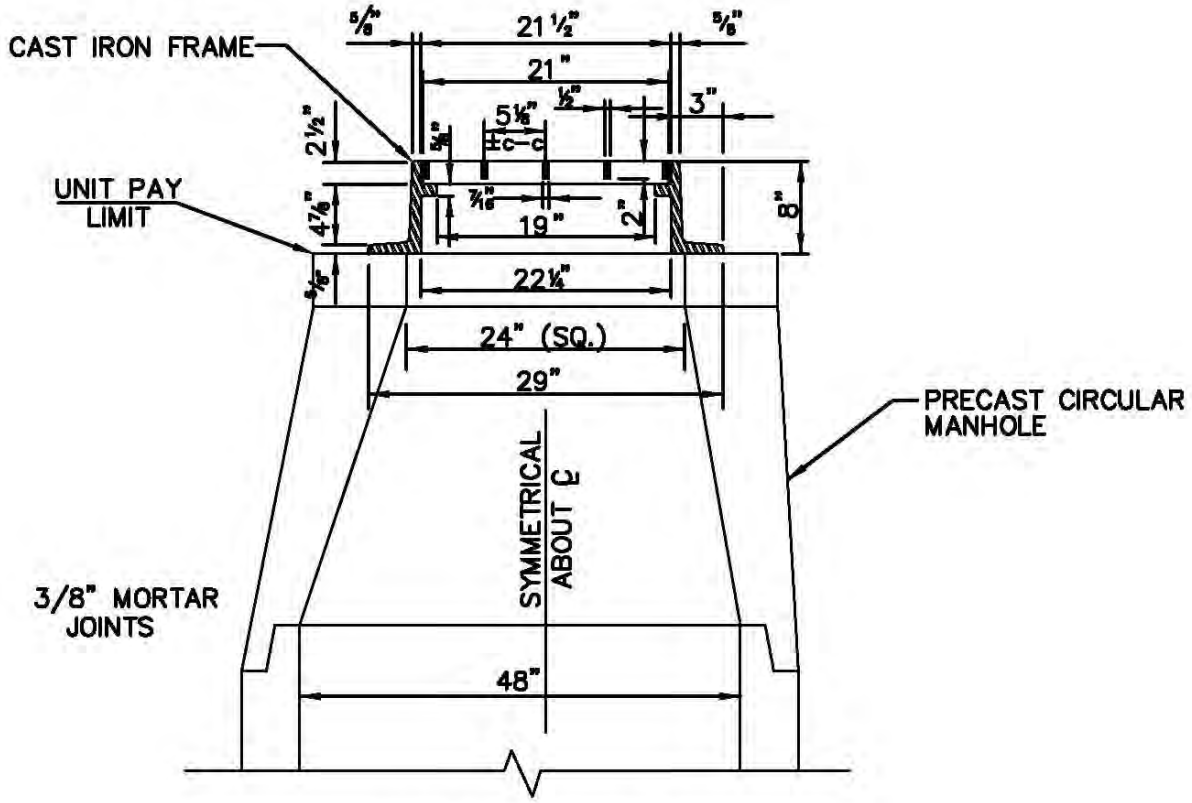

SECTION A–A

FRAME & GRATE TYPE 'B'

S:\DWG\DETAILS\604-4 FR&GR-B.DWG

NOT TO SCALE
FIGURE 604–4

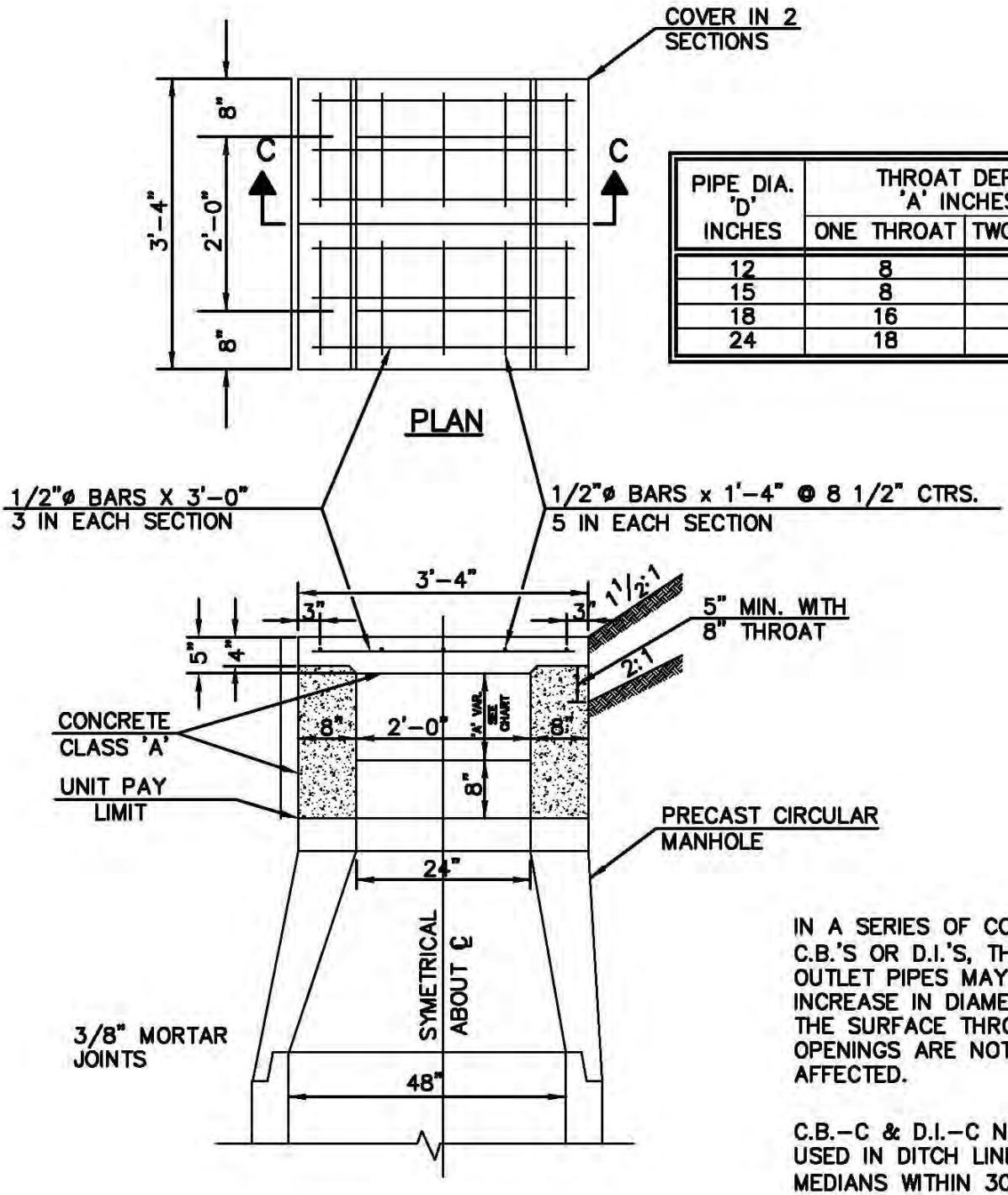

PIPE DIA. 'D' INCHES	THROAT DEPTH 'A' INCHES	
	ONE THROAT	TWO THROAT
12	8	8
15	8	8
18	16	8
24	18	16

IN A SERIES OF CONNECTING C.B.'S OR D.I.'S, THE OUTLET PIPES MAY INCREASE IN DIAMETER, BUT THE SURFACE THROAT OPENINGS ARE NOT AFFECTED.

C.B.-C & D.I.-C NOT TO BE USED IN DITCH LINES OR MEDIANS WITHIN 30' FROM EDGE OF PAVEMENT. TO BE USED ONLY AT LOCATIONS WHERE IT IS IMPOSSIBLE TO BE HIT BY VEHICLES.

CATCH BASIN TOP TYPE 'C'

S:\DWG\DETAILS\604-5 FR&GRT-C.DWG

NOT TO SCALE
FIGURE 604-5

FRAME AND GRATE (CAST IRON)

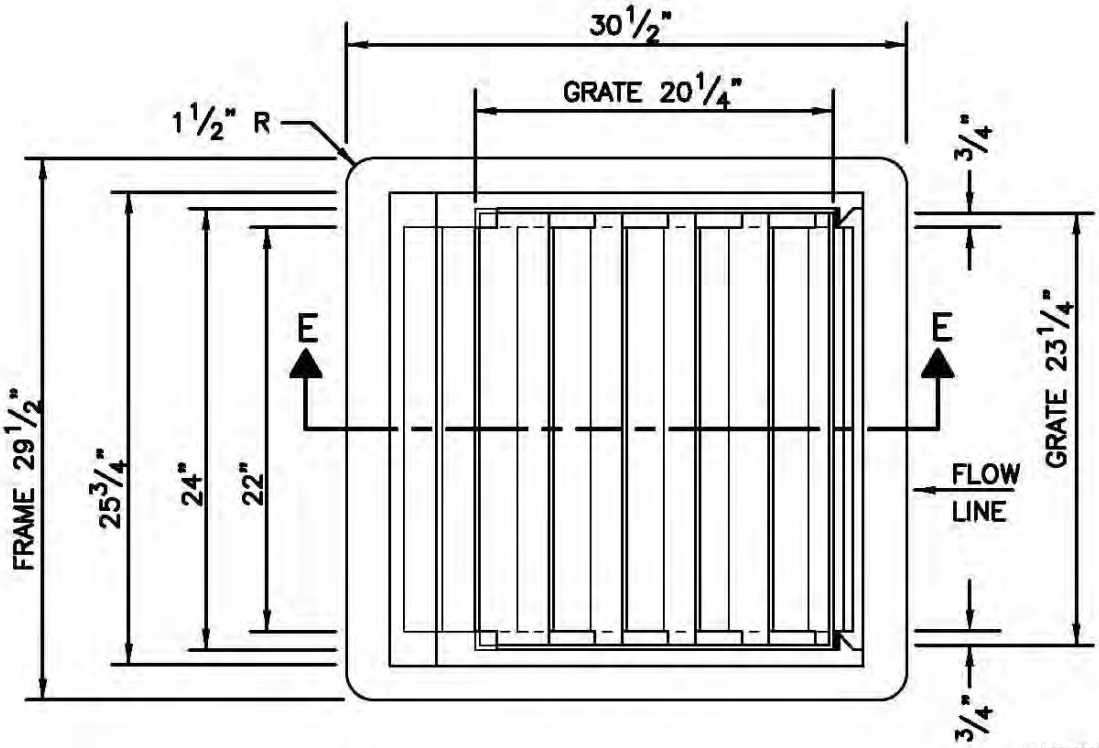

PLAN

WATERWAY OPENING
1.98 SQ. FT.

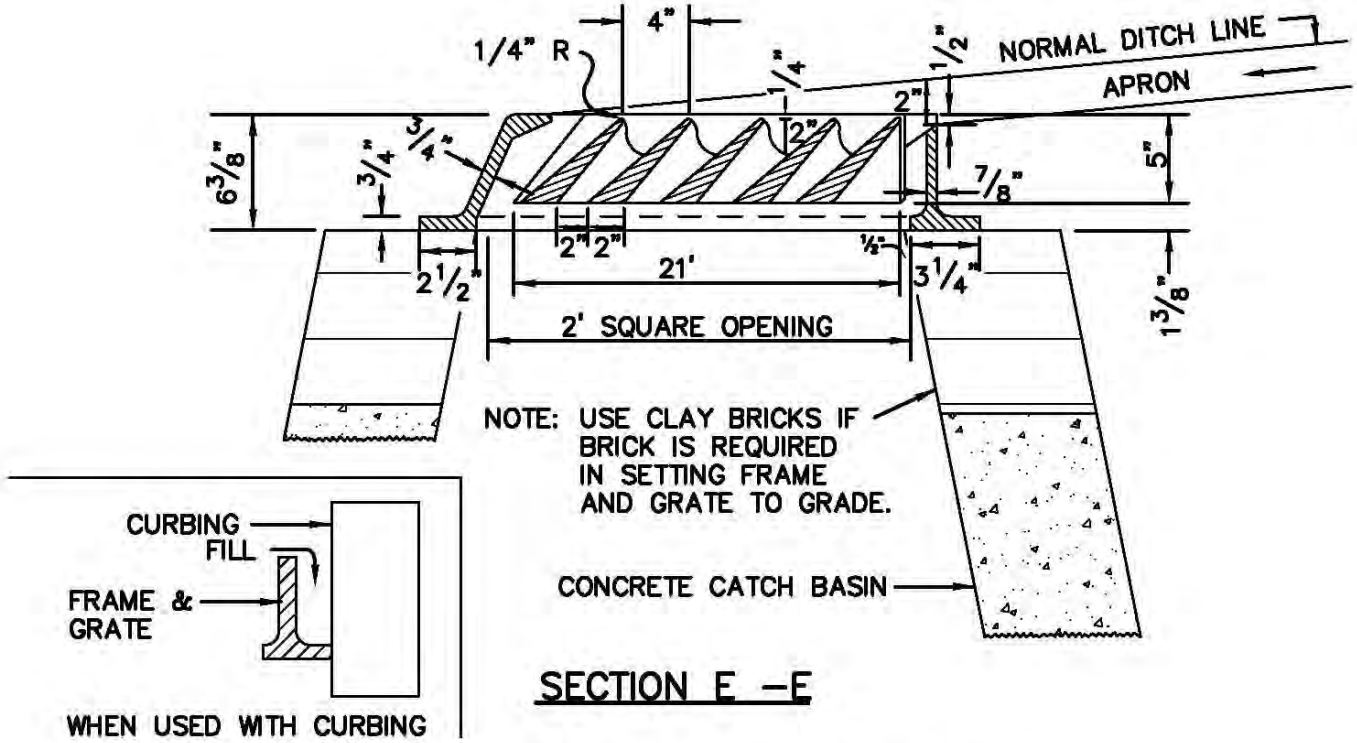

SECTION E –E

FRAME & GRATE TYPE 'E'

S:\DWG\DETAILS\604-6 FR&GR-E.DWG

NOT TO SCALE
FIGURE 604-6

NOTES:

GRATE TYPE 'F' TO BE USED WITH CB TYPE 'A' FRAME.

USE ON STEEP GRADES WHERE HIGH CAPACITY IS NEEDED AND BICYCLE TRAFFIC IS ANTICIPATED.

WATERWAY AREA = 1.5 SQ. FT.

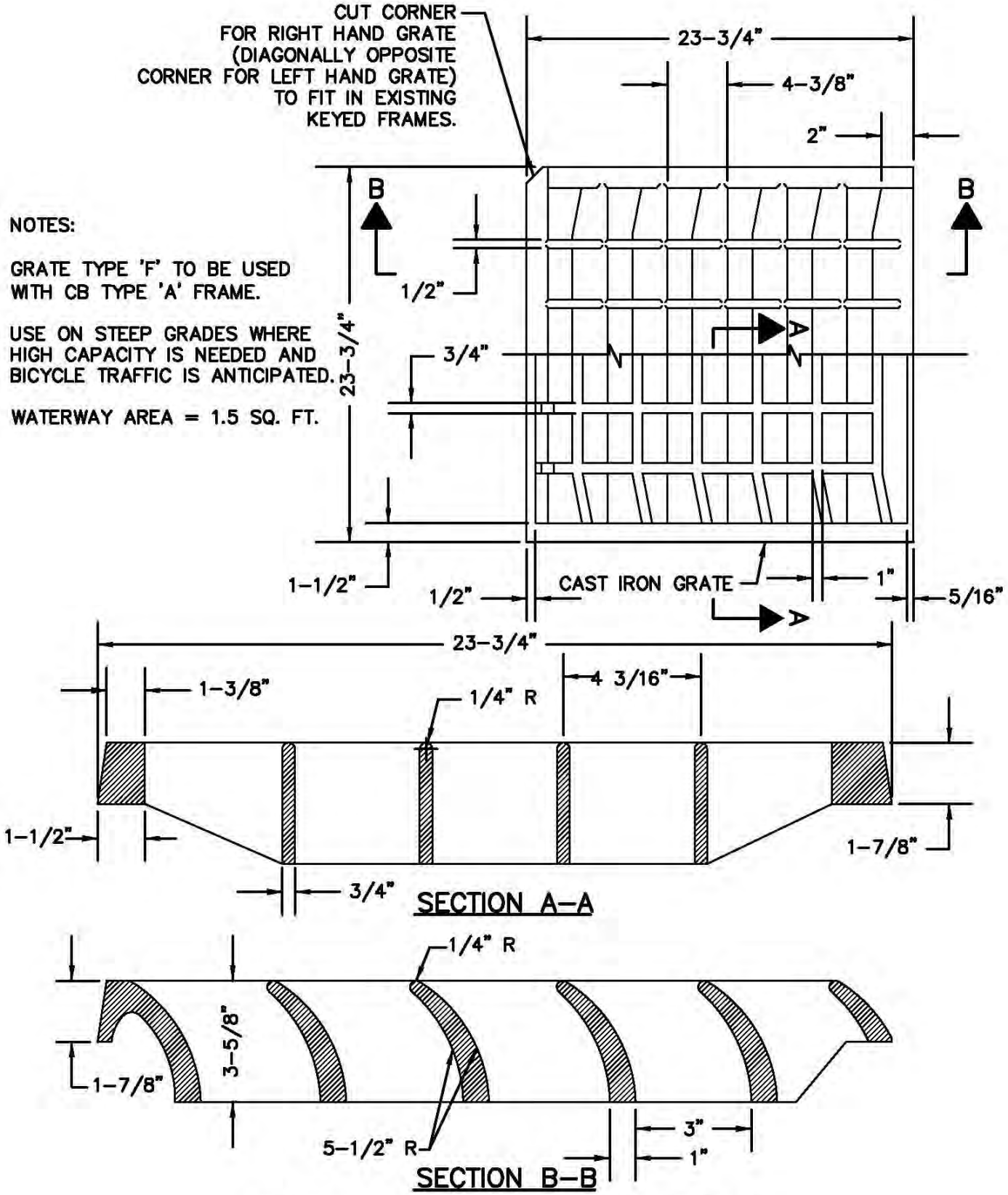

FRAME & GRATE TYPE 'F'

S:\DWG\DETAILS\604-7 FR&GRT-F.DWG

NOT TO SCALE

FIGURE 604-7

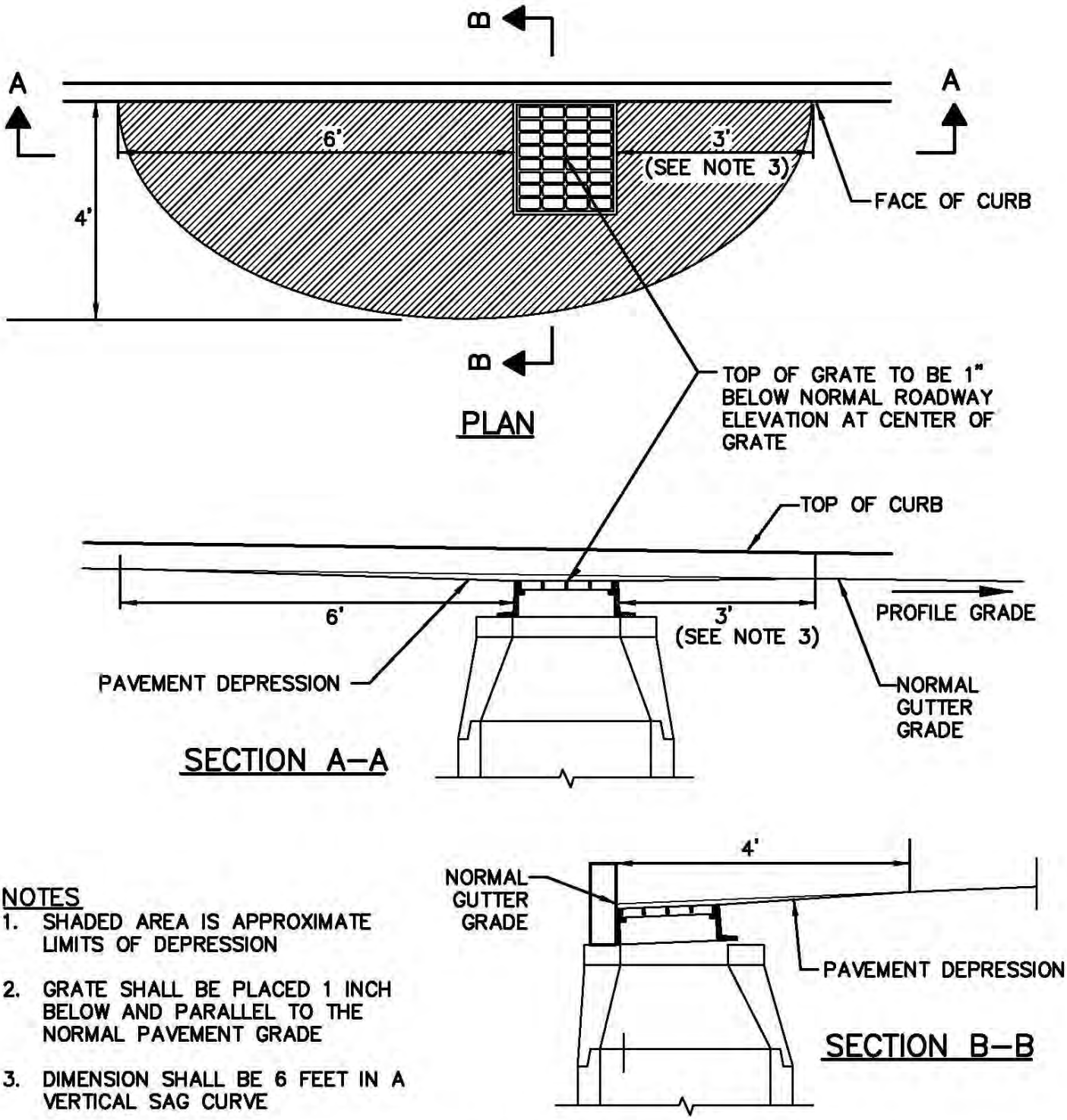

NOTES

1. SHADED AREA IS APPROXIMATE LIMITS OF DEPRESSION
2. GRATE SHALL BE PLACED 1 INCH BELOW AND PARALLEL TO THE NORMAL PAVEMENT GRADE
3. DIMENSION SHALL BE 6 FEET IN A VERTICAL SAG CURVE

PAVEMENT DEPRESSION AT CATCH BASIN

S:\DWG\DETAILS\604–8 DEPRESSION.DWG

NOT TO SCALE

FIGURE 604–8

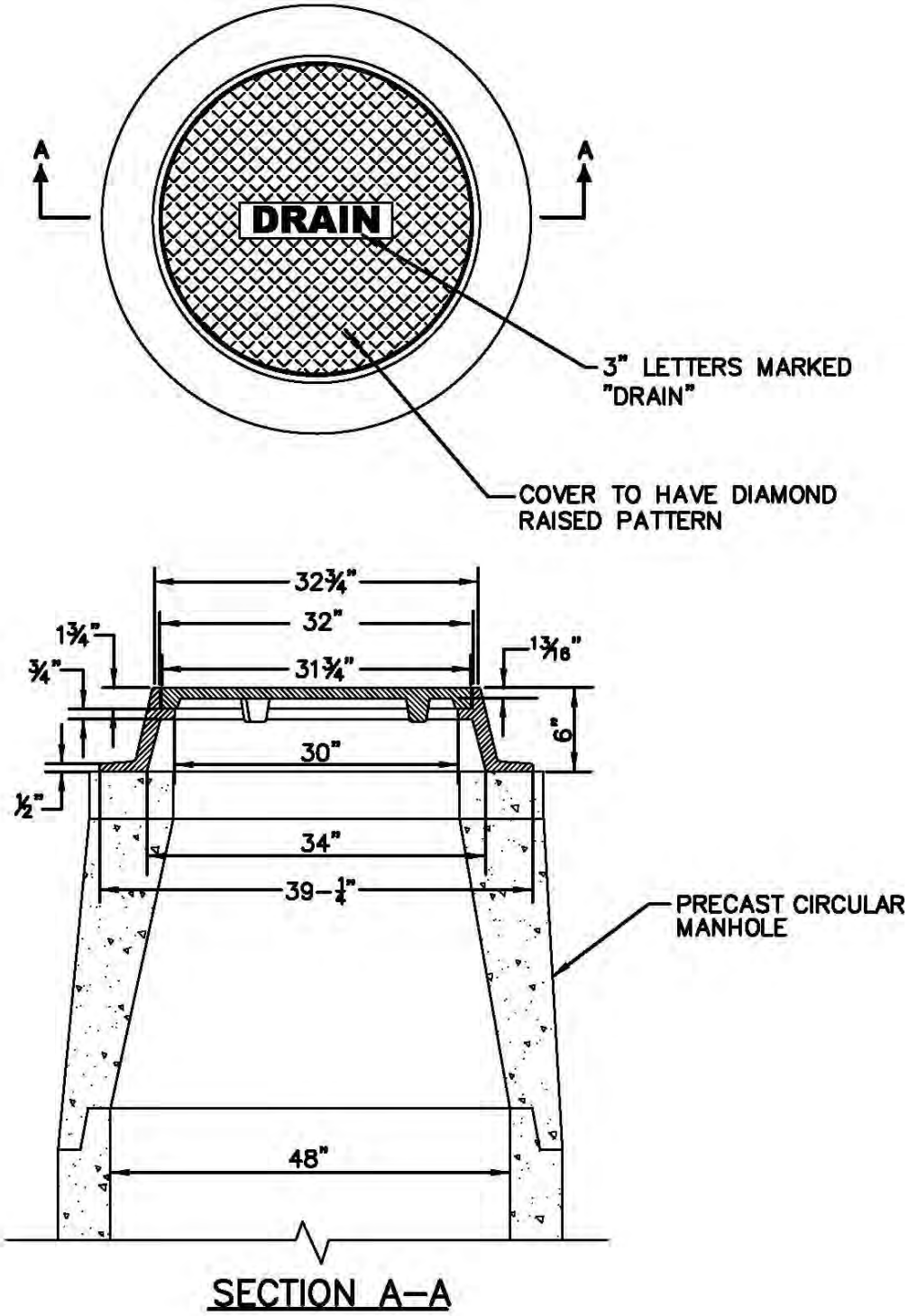

DRAIN MANHOLE COVER

S:\DWG\DETAILS\604-9 DMH COVER.DWG

NOT TO SCALE
FIGURE 604-9

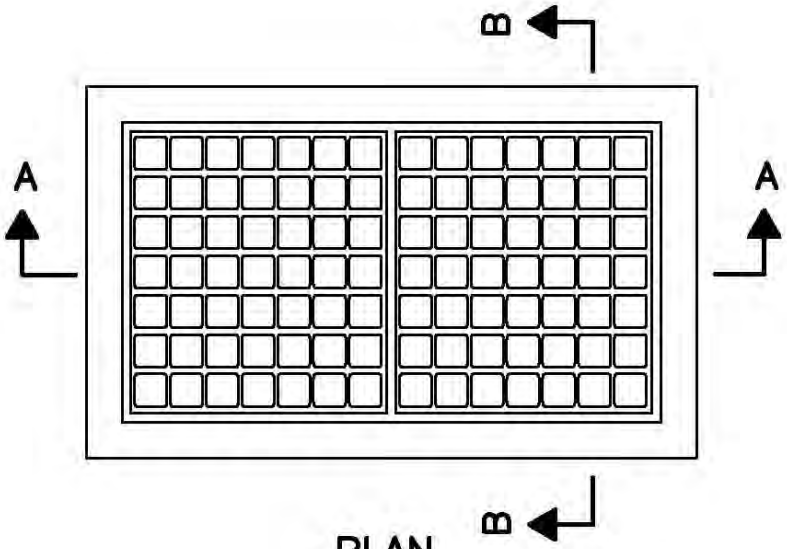

PLAN

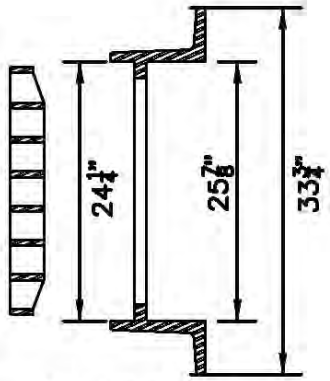

SECTION B–B

GRATE TO BE
CAST IRON

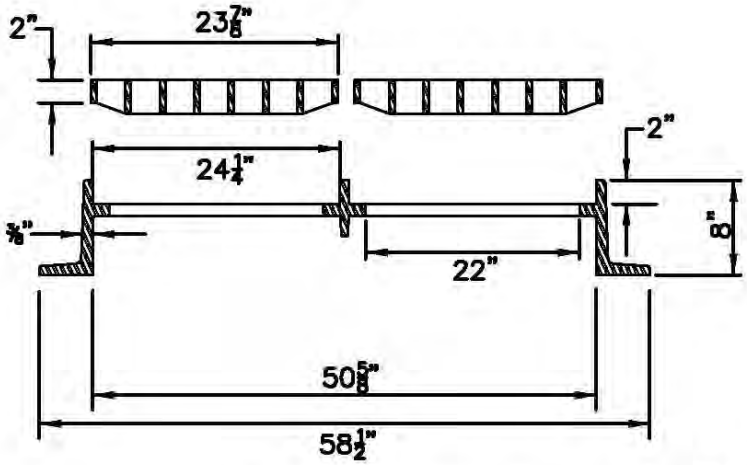

SECTION A–A

GRATE AND FRAME TO BE CAST IRON

WATERWAY OPENING=434 SQ. INCHES

AS MANUFACTURED BY EAST JORDAN
IRON WORKS OR APPROVED EQUAL

DOUBLE FRAME & GRATE TYPE 'B'

S:\DWG\DETAILS\604-10 DOUBLE FR&GR-B.DWG

NOT TO SCALE
FIGURE 604-10

NOTES

1. POLYETHYLENE LINER, ITEM 604.7, SHALL BE FABRICATED AT SHOP, DOWNSPOUT SHALL BE EXTRUSION FILLET WELDED TO THE POLYETHYLENE SHEET.
2. CONTINUOUS BEAD OF APPROVED SILICONE SEALANT TO BE PLACED BETWEEN FRAME AND POLYETHYLENE SHEET.
3. POLYETHYLENE SHEET TO BE TRIMMED A MAXIMUM OF 4 INCHES OUTSIDE THE FLANGE OF THE FRAME OF CATCH BASIN BEFORE PLACEMENT OF CONCRETE BACKFILL (EXCEPT WHERE 3 FLANGED FRAME AND CURB IS USED).
4. CENTER OF GRATE AND FRAME MAY BE SHIFTED 6 INCHES FROM THE CENTER OF THE DOWNSPOUT IN ANY DIRECTION.
5. USE ONLY ON DRAINAGE STRUCTURES IN PAVED AREAS

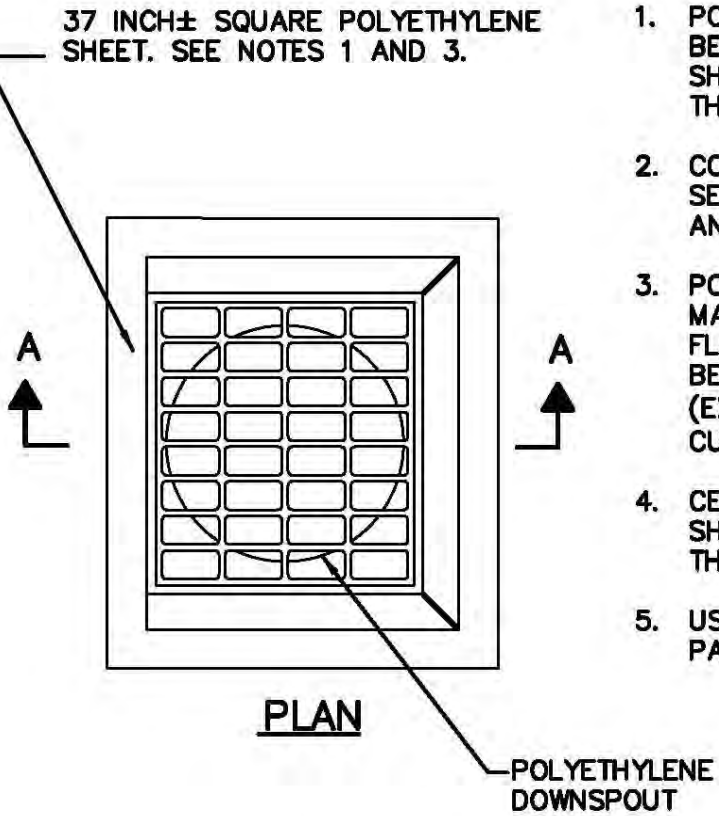

PLAN

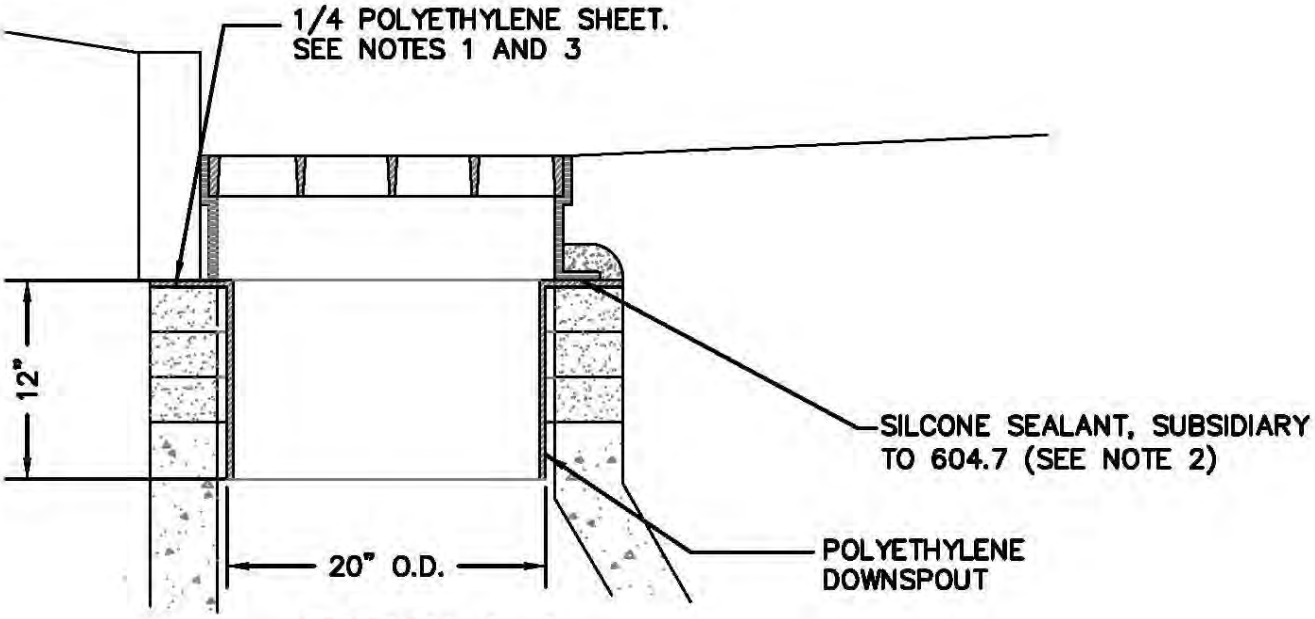

SECTION A–A

POLYETHYLENE LINER DETAIL

S:\DWG\DETAILS\STRUCTUREADJ.DWG

NOT TO SCALE

FIGURE 604–11

SECTION 605 -- UNDERDRAINS

Description

1.1 This work shall consist of furnishing (unless pipe is provided) and installing underdrains at the locations shown or ordered. Pipe, common structure excavation, support membrane, graded aggregate, sand cushion and backfill shall be included in this work.

1.1.1 Furnishing and installing underdrain flushing basins as shown on the plans or ordered shall also be included in this work.

1.2 Aggregate underdrain shall consist of furnishing and installing support membrane, graded aggregate, pipe, if ordered, and common structure excavation, and backfill as necessary.

Materials

2.1 Polyvinyl Chloride (PVC). Smooth-walled PVC pipe, bends and cleanouts shall conform to AASHTO M 278. Perforated polyvinyl chloride profile wall pipe shall conform to AASHTO M 304.

2.2 Polyethylene. Corrugated polyethylene drainage tubing 6 inch diameter shall conform to AASHTO M 252, Type S with class 2 perforations except that the required pipe stiffness shall be a minimum of 60 psi. Perforated corrugated polyethylene pipe of nominal sizes 12 to 36 inch diameter shall conform to AASHTO M 294, with Class 1 perforations. Pipe length for all sizes shall not exceed 20 feet.

2.3 Manufacturers of Polyethylene and Polyvinyl Chloride (PVC) pipe must participate in and maintain compliance with, the AASHTO National Transportation Product Evaluation Program (www.ntpep.org) that audits producers of polyethylene pipe. A certificate of compliance as required by 105.03 shall be provided for each shipment.

2.4 Pipe Underdrain, Materials per Contractor's Option.

2.4.1 When the item reads 6 inch pipe underdrain (contractor’s option), it shall be the Contractor's option whether he furnishes, perforated polyvinyl chloride pipe or perforated corrugated polyethylene drainage tubing.

2.5 Sand for cushion shall meet the requirements of 209.3.2

2.6 Underdrain backfill shall meet the requirements of 209.2.1.

2.7 Molded pull boxes for underdrain flushing basins shall conform to 614.2.6.

2.8 Aggregate for aggregate underdrain shall conform to Section 703, Table 703- 1 Required Grading, Graded Coarse Aggregate, Standard Size #4.

2.9 Support membrane shall be a nonwoven geotextile and conform to Item 593.131 – Geotextile, Subsurface Drainage, Class 3, Non-Woven

Construction Requirements

3.1 Trenches shall be excavated to the dimensions and grade shown or ordered. A minimum 2 inch sand cushion in common excavation and a 6 inch sand cushion in rock excavation shall be placed in the bottom of the trench for its full width and length to the grade of the bottom of the pipe.

3.2 Perforated pipe shall normally be placed with the perforations down, and sections shall be securely joined with the appropriate couplings, fittings, or bands.

3.3 After the pipe installation has been inspected and approved, underdrain backfill material shall be placed to a height of 12 inches above the top of the pipe, care being taken not to displace the pipe. The remainder of the backfill material shall then be placed to the required height and compacted in lifts not to exceed 12 inches.

3.4 Pipes shall be laid with 45 degree bends where changes in direction are indicated on the plans.

3.5 Except at structures, upgrade ends of all underdrain pipe installations shall be closed with suitable plugs to prevent entry of soil material.

3.6 Flushing Basins.

3.6.1 Flushing basins shall be installed approximately 2 feet beyond the break in the shoulder and in such manner as to allow the molded pull box to be set within the slope limits.

3.6.2 Any excavation required to install flushing basins shall be done in accordance with 3.1.

3.6.3 Additional 6 inch un-perforated pipe shall be added to the long 1/8 bend to bring the riser to the required elevation.

3.6.4 After the fitting and 6 inch riser pipe installation has been inspected and approved, underdrain backfill material shall be placed and properly compacted to a height which will allow for the proper installation of the cleanout and molded pull box. The remainder of the backfill and base course necessary shall then be placed to the required height and compacted. Care shall be taken to prevent backfill material from entering the riser pipes.

3.6.5 Flushing basins and the related underdrain system shall be tested prior to acceptance.

3.7 Aggregate Underdrains.

3.7.1 Trenches shall be excavated to the dimensions shown or ordered. Type 1 aggregate underdrain shall have a 6 inch by ten foot section of pipe at the outlet end of each section of underdrain. Type 2 shall include pipe of the specified diameter throughout.

3.7.2 Nonwoven support membrane shall be installed so as to minimize the number of fabric seams within the trench section. Seams shall be constructed by overlapping the fabric at least 12 inches and folding to create a joint which will ensure that soil infiltration will be retarded.

3.7.3 Aggregate shall be placed within the typical section as shown in a manner that will maintain the fabric integrity. Punctures created by aggregate, equipment, tools or improper handling shall be patched by placing fabric at least 12 inches beyond the puncture limits on the outside of the typical section.

3.7.4 Pipe, as required, shall be laid to grade as ordered.

3.7.5 Backfill shall be placed and tamped in the areas outside and adjacent to the aggregate underdrain so that the shape of the typical is maintained. Sharp pieces of rock shall not be placed immediately adjacent to the fabric.

3.7.6 When rock is encountered, sharp projections of solid rock shall be removed within the typical section, primarily at the bottom of the trench.

Method of Measurement

4.1 Underdrains will be measured by the linear foot to the nearest 0.1 of a foot along the centerline of the pipe.

4.1.1 Aggregate underdrain will be measured by the linear foot, to the nearest 0.1 of a foot along the centerline of the aggregate underdrain.

4.2 Backfill or cushioning material furnished will be subsidiary.

4.3 Underdrain flushing basins will be measured by the number of units installed.

4.3.1 Each unit shall include all required riser pipe, 45º wye, long bend, cross pipe, cleanout pull box and backfill material as required.

Basis of Payment

5.1 The accepted quantities of underdrain will be paid for at the contract unit price per linear foot complete in place, including common structure excavation, sand cushion and backfill.

5.1.1 Payment will not be made for 45 degree bends.

5.1.2 Rock excavation will be paid for under Item 206.2.

5.2 The accepted quantity of underdrain flushing basins will be paid for at the contract unit price per each complete in place, including common structure excavation and backfill.

5.3 The accepted quantities of aggregate underdrain of the type specified will be paid for at the contract unit price per linear foot in place, including required riser pipe, 45º wye, long bend, cross pipe, cleanout pull box, common structure excavation and backfill.

5.3.1 Payment will not be made for fabric used for patching.

5.3.2 Excavation required will be paid for as provided in 5.1 and 5.1.2.

Pay Items and Units, Section 605 -- Underdrains:

605.4__	__ inch Perforated Polyvinyl Chloride Pipe Underdrain	Linear Foot
605.5__	__ inch Perforated Corrugated Polyethylene Pipe Underdrain	Linear Foot
605.79	Underdrain Flushing Basins	Each
605.81A	__ Aggregate Underdrain Type 1	Linear Foot
605.82ABC	__ Aggregate Underdrain Type 2, With _____Pipe	Linear Foot
605.84015	1-1/2 inch PVC Plastic Horizontal Drains	Linear Foot
605.906	6 inch Pipe Underdrain (Contractor's Option)	Linear Foot

Notes:

A = Width of Underdrain

1=18" 2=24" 3=30" 4=36"

B = Type of Material

1 = Blank
2 = Blank
3 = Blank
4 = Perforated Polyvinyl Chloride
5 = Perforated Corrugated Polyethylene

C = Diameter of Pipe

1=6" 2=12" 3=18" 4=24"

Examples:

605.82351	30 inch Aggregate Underdrain Type 2, with Perforated Corrugated Polyethylene Pipe 6inch Pipe
605.906	6 Inch Pipe Underdrain (Contractor's Option)

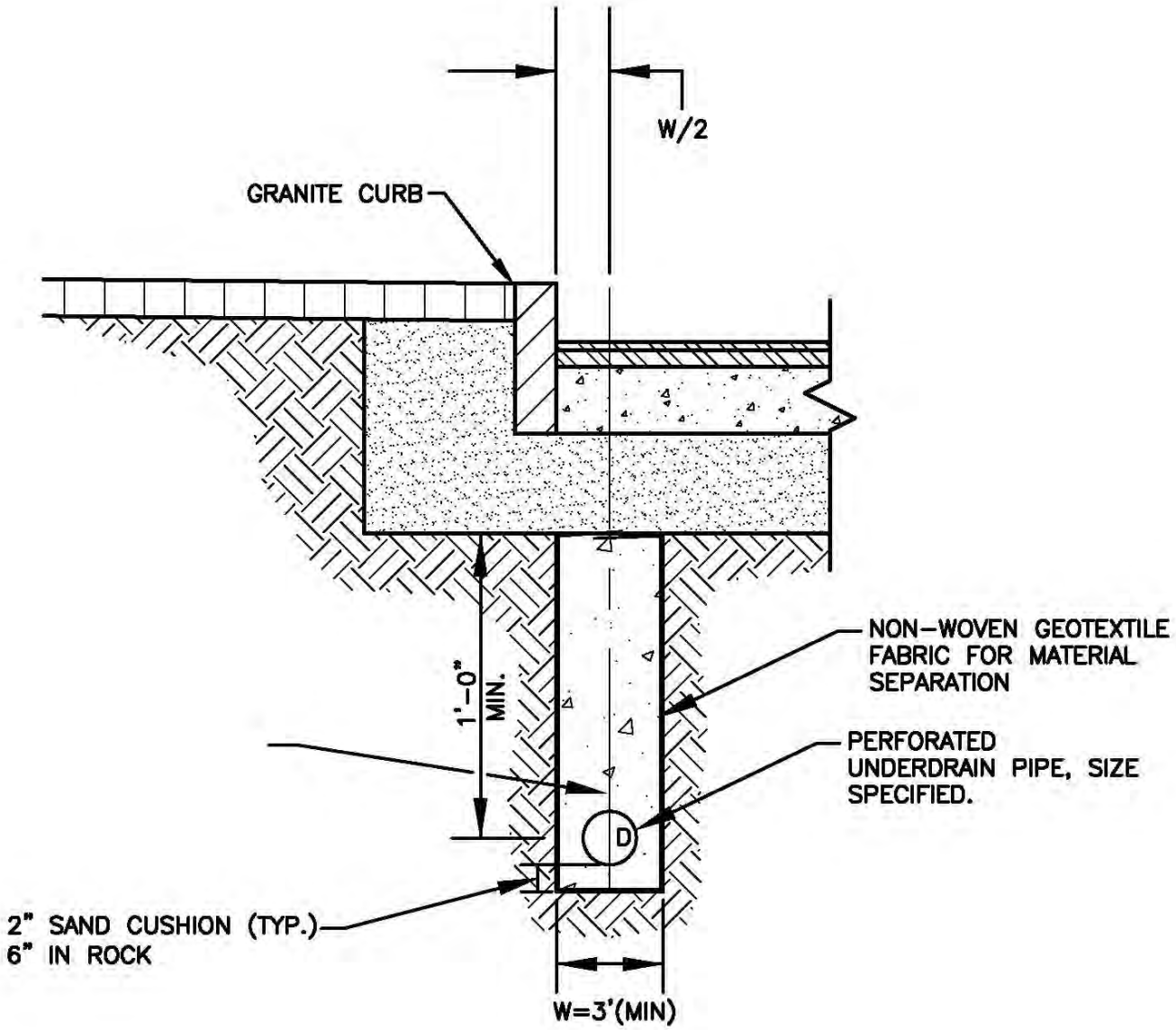

UNDERDRAIN

S:\DWG\DETAILS\605-1 UNDER-DRN.DWG

NOT TO SCALE

FIGURE 605-1

UNDERDRAIN
'L' HEADWALL

CONC. P.C.-1 OR 3 M.R.M. P.C. 2 OR 4

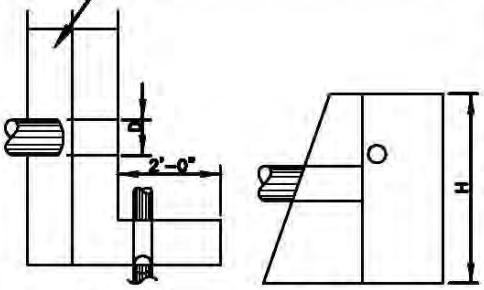

PLAN ELEVATION

CONCRETE	NO. U.L.-1
MOR.RUB.MAS.	NO. U.L.-3

CONCRETE CLASS 'A'

D DIA. R.C.P. CULV.	H HEADER HEIGHT	MASONRY IN "L" - C.Y. FOR 6" UND.	FOR 12" UND.
15"	4'-3"	.30	.27
18"	4'-6"	.32	.29
24"	3'-0"	.36	.33
30"	5'-6"	.40	.37
36"	6'-0"	.43	.40

C.B. (OR HEADER) C.B.

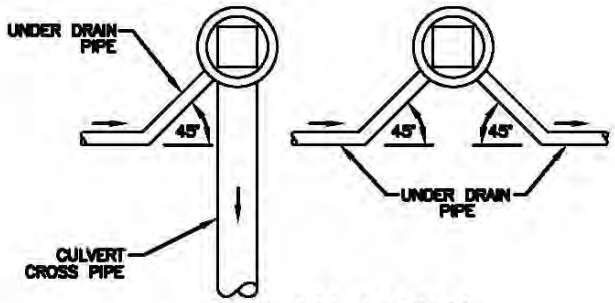

PLAN VIEWS

DETAIL FOR 45° BENDS IN UNDERDRAIN PIPES

UNDERDRAIN HEADWALL

DIMENSIONS SHOWN ARE TO PAYMENT LINES. MORTAR RUBBLE MASONRY TO BE STEPPED OUTSIDE PAYMENT LINES ON SLOPING FACE. CONCRETE CLASS 'A'

CONCRETE	NO. U.H.-1
MOR.RUB.MAS.	NO. U.H.-2

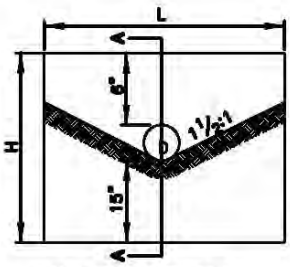

ELEVATION

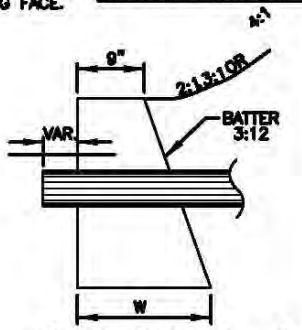

SECTION A-A

D UND. DIA. IN.	PER HEADER MAS'RY C.Y.	EXC. 1' PER DEPTH C.Y.	L FT.-IN.	H FT.-IN.	W IN.
6	.17	.49	2-0	2-3	15 3/4
12	.32	.66	3-2	2-9	17 1/2
15	.43	.76	3-10	3-0	18

CONCRETE	NO. U.L.-2
MOR.RUB.MAS.	NO. U.L.-4

D UND. DIA. IN.	ANG. DEG.	PER HEADER MAS'RY C.Y.	EXC. 1' PER DEPTH C.Y.	L FT.-IN.	H FT.-IN.	W IN.
6	90	.30	.71	1-3	2-3	15 3/4
6	120	.26	.65	1-3	2-3	15 3/4
6	135	.25	.62	1-3	2-3	15 3/4
12	90	.54	.95	2-0	2-9	17 1/2
12	120	.49	.87	2-0	2-9	17 1/2
12	135	.47	.84	2-0	2-9	17 1/2
15	90	.72	1.10	2-6	3-0	18
15	120	.66	1.02	2-6	3-0	18
15	135	.64	.99	2-6	3-0	18
18	90	.85	1.20	2-9	3-3	18 3/4
18	120	.79	1.11	2-9	3-3	18 3/4
18	135	.77	1.01	2-9	3-3	18 3/4
24	90	1.25	1.46	3-6	3-9	20 1/2
24	120	1.18	1.37	3-6	3-9	20 1/2
24	135	1.14	1.39	3-6	3-9	20 1/2

DIMENSIONS SHOWN ARE TO PAYMENT LINES. MORTAR RUBBLE MASONRY TO BE STEPPED OUTSIDE PAYMENT LINES ON SLOPING FACES.

UNDERDRAIN
'L' HEADWALL

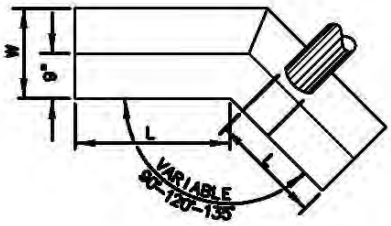

PLAN

CONCRETE CLASS 'A'

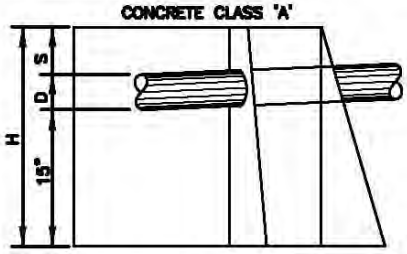

ELEVATION

UNDERDRAIN HEADWALLS & UNDERDRAIN 'L' HEADWALLS

S:\DWG\DETAILS\605-2 UNDER-DRN2.DWG

NOT TO SCALE

FIGURE 605-2

SECTION 606 – GUARDRAIL

Description

1.1 This work shall consist of furnishing and installing guardrail, anchorages, terminal units, concrete barriers and pipe handrails of the type specified at the locations shown on the plans or as ordered.

1.1.1 Resetting of existing guardrail shall be included in this work.

1.1.2 Temporary guardrail and temporary concrete barrier shall consist of furnishing, maintaining and removing rail as specified.

1.1.3 Any excavation required for this work is subsidiary to the item except as provided in 606.5.8

Materials

2.1 Wood Posts, Offset Blocks and Rails.

2.1.1 Wood posts shall be treated in accordance with 2.2, sound and reasonable straight. The ends shall be cut square or as indicated. Posts with hollow knots, open or plugged holes, or season checks exceeding 1/4 inch in width will be rejected.

2.1.1.1 Guardrail posts, offset blocks and wood rails shall be made of timber with a stress grade of 1,200 psi or more for extreme fiber in bending in accordance with AASHTO M 168. All cuts and holes shall be made before preservative treatment.

2.1.1.2 Wood rails shall be treated in accordance with 2.2, straight and sound, free from loose knots and other defects, and shall be surfaced on all sides.

2.1.2 Synthetic offset blocks for guardrail shall be a product as listed on the Qualified Products List.

2.2 Preservative Treatment.

2.2.1 All wood posts and rails shall be treated with preservative materials conforming to the requirements of AASHTO M 133 and AWPA,

2.2.2 The type of treatment shall be one of the following:

Table 606- 1 Wood Post Preservative Treatments

Treatment	Minimum net retention, Pounds per cubic foot
Type A Pentachlorophenol	0.60 (dry salts)
Water-Borne Preservative	0.40

2.2.3 All wood posts and rails shall be treated after sawing and drilling or retreated after drilling in accordance with AASHTO M 133 and AWPA.

2.3 Structural Shape Posts.

2.3.1 Structural shape posts shall conform to ASTM A 36 and shall be galvanized after fabrication to meet the requirements of AASHTO M 111.

2.3.2 Offset blocks for steel post assemblies shall be made of synthetic materials in accordance with 2.1.2.

2.4 Rails and Fittings for Beam Guardrail.

2.4.1 Rails and fittings shall be as shown in the current edition ***A Guide to Standardized Highway Barrier Hardware, AASHTO – AGC--ARTBA Joint Cooperative Committee.*** Galvanized steel rail elements, terminal sections, bolts, nuts, and other fittings shall conform to AASHTO M 180, (except that paragraph 11, Marking, shall not apply), Type II, Class A. Galvanized steel rail elements and terminal sections shall be treated with a solution of sodium dichromate or other approved chemical solutions so as to prevent or reduce storage stain

2.4.1.1 Miscellaneous steel hardware not shown in ***A Guide to Standardized Highway Barrier Hardware, AASHTO – AGC--ARTBA Joint Cooperative Committee*** designation shall conform to ASTM A 36 and A 500 as appropriate. Hardware shall be galvanized, after all fabrication, in accordance with AASHTO M 232.

2.4.2 Steel rail elements shall be shop punched to allow for 6 foot - 3 inch post spacing or as required. Where the rail is on a curve having a radius of 150 feet or less, the rail shall be shop curved. The plates at the splice shall make contact throughout the area of the splice. Guardrail parts furnished under this specification shall be interchangeable with similar parts, regardless of the source of manufacture.

2.4.3 The post bolt and connection shall withstand a 5,000 pound pull in either direction.

2.5 Anchor blocks. Anchor blocks shall be as shown on the plans.

2.6 Permanent Concrete Anchors and Barriers.

2.6.1 Concrete shall be Class AA conforming to 520. 1.2. The cement shall be Type III Portland cement as specified in AASHTO M 85. Slump shall be closely controlled between 2 and 3 inches. Concrete used in extrusion or slip form barrier shall be of such consistency that after extrusion, it shall maintain the shape of the barrier without support.

2.6.1.1 Corrosion inhibitor admixture shall conform to AASHTO M 194 (ASTM C 494) Type C as included on the Qualified Products List.

2.6.2 Reinforcing steel shall conform to Section 544.

2.6.3 Structural material including end connectors shall conform with the applicable portions of these specifications.

2.6.3.1 Galvanizing shall conform to AASHTO M 111.

2.6.4 Mortar for patching, when permitted, shall be composed of the exact ingredients of the concrete with the coarse aggregate omitted.

2.6.5 Preformed Expansion Joint Filler shall conform to AASHTO M 153, Type III (selfexpanding cork) or AASHTO M 213 (non-extruding and resilient bituminous types), or ASTM D8139 (semi-rigid, closed cell polypropylene foam).

2.6.6 Water repellent coating on concrete barrier, except portable concrete barrier for traffic control, shall be Silane/Siloxane conforming to Section 534 .

2.7 Terminal Units

2.7.1 Terminal units used shall be as specified on the plan or as ordered by the Engineer.

2.8 Handrail.

2.8.1 Steel pipe for rails and posts shall conform to ASTM A 53, Schedule 40, Standard Weight of the diameter shown on the details. Pipe shall be galvanized after fabrication in accordance with the requirements of AASHTO M111.

2.8.2 Grout for anchoring the pipe posts shall be a High strength, Impact Resistant, Non-shrinking grout, approved by the Engineer.

Construction Requirements

3.1 Posts.

3.1.1 Wood posts shall be set plumb at the required locations by either auguring, excavating or driving. The bottom of the holes shall be thoroughly tamped to grade. The face of the post nearest the road shall present a vertical line from the top to bottom.

3.1.2 Steel posts shall be driven to grade at the spacing required.

3.1.3 Post and anchor holes shall be backfilled with acceptable material placed in layers and thoroughly compacted with a power tamper.

3.1.4 The wood offset blocks shall be "toe nailed" to the rectangular wood posts to prevent them from turning.

3.1.5 Breakaway wood posts A and B shall be set in augured, pre-driven or hand dug holes and backfilled in accordance with 3.1.3.

3.2 Beam Rail.

3.2.1 Beam guardrail shall be erected to provide a smooth continuous rail conforming to the line and grade of the highway. Corrugated rail elements shall be lapped so that the exposed end of each element is away from approaching traffic. Tube-type beam elements shall be bolted and joined as shown on the plans. Expansion joint bolts shall be tightened, but not to a degree which will prevent the rail elements from sliding past each other longitudinally. All other bolts shall be drawn tight.

3.2.2 All metal work shall be fabricated in the shop. No punching, cutting, or welding shall be done in the field. Holes may be drilled or cutting done for special details only.

3.2.3 Galvanized beam rail shall be stored to prevent wet storage stain. Storage shall be off the ground and individual rail elements shall be separated with spacers to provide free access of air. The beam rail shall be inclined in a manner which will provide continuous drainage.

3.2.4 All damage to galvanized surfaces, and threaded portions of all fittings and fasteners and cut ends of bolts after assembly, shall be repaired by thoroughly wire brushing the damaged area and painting it with 2 coats of zinc-rich primer.

3.2.5 At each location where an electric transmission, distribution, or secondary line crosses any of the types of metal guardrail covered by these specifications, the guardrail shall be grounded as required by the electric utility company.

3.2.5.1 At locations where electric lines run parallel and in close proximity to metal guardrail, grounding systems may be required by the electric utility company.

3.3 Terminal sections. Terminal sections shall be installed at each end of every installation of corrugated beam guardrail unless otherwise specified. Units shall be installed per manufacturer's specifications.

3.4 Wood Rail. Wood rail shall be constructed as shown on the plans, but shall not be used on any City street. Wood rail may be used in other City owned areas, subject to the Engineers approval. Wood surfaces cut or injured shall be brush treated with 2 applications using preservatives specified in AWPA M4.

3.5 Resetting. The existing guardrail including anchorages shall be dismantled in a careful and workmanlike manner and suitably stored. Unless otherwise ordered, hardware and fittings shall be packed in substantial containers. New treated posts shall be substituted for all existing untreated posts. Material damaged due to the Contractor's negligence shall be replaced with new materials.

3.6 Concrete Barriers.

3.6.1 General.

3.6.1.1 Concrete barriers shall be supplied as precast units or constructed cast-in-place as specified to the configuration and details shown on the plans. Portable concrete barrier for traffic control shall be precast units.. Minor deviations in the shape may be submitted to the Engineer for approval.

3.6.1.1.1 Concrete Barrier

a. Cross-sectional dimensions shall not vary from the dimensions specified by more than 1/4 in. (6 mm) and shall not be out of plumb by more than 1/4 in. (6 mm), except the base which shall not vary by more than 1/2 in. (13 mm).
b. Longitudinal dimensions shall not vary from the dimensions specified by more than 1/4 in. (6 mm) per 10 ft. (3.0 m).
c. Surface straightness irregularities when checked with a 10 ft. (3.0 m) straight edge shall not exceed 1/4 in. (6 mm).
d. Bar Reinforcement cover shall not vary from the dimensions specified by more than 1/2 in. (13 mm).

3.6.1.2 Sections of barrier shall be uniform in color and in good condition, free from cracked or spalled surfaces.

3.6.1.3 The layout of the concrete barriers will be as shown on the plans or as directed by the Engineer. Before any concrete or precast barrier may be placed, the subbase shall be compacted to 95% density in accordance with the applicable tests as specified in 304.3.7and fine graded to a tolerance of ± 1/2 in. of the true grade at any location under the barrier.

3.6.1.4 Shop drawings and working drawings shall be submitted in accordance with 104.02.

3.6.1.5 Concrete shall contain corrosion inhibitor (calcium nitrate) admixture added at the rate of 4 gallons per cubic yard

3.6.1.6 Form work shall be in accordance with 520.3.2, externally braced in like new condition without any projections or depressions which would detract from the required finish. Proper care and precautions shall be exercised in removing forms to ensure no damage results to the finished surface of the barrier.

3.6.1.7 Reinforcing steel shall be placed in accordance with Section 544.

3.6.1.8 Concrete barrier, except portable concrete barrier for traffic control, shall receive a Class 1, Ordinary Finish in accordance with 520.3.12

3.6.1.9 Water repellent (Silane/Siloxane) shall be applied to concrete barrier, except portable concrete barrier for traffic control, in accordance with 534.3.3.

3.6.1.10 Defects are divided into two categories, minor defects and major defects. Minor defects in the barrier may be repaired in the field. Major defects shall be cause for rejection of the section, or the section shall be repaired in the manner directed by the Engineer.

3.6.1.10.1 Minor defects are defined as holes, honeycombing or spalls which are 6 in. (150 mm) or less, in diameter, and which do not expose the outermost surface of the steel reinforcement. Surface voids 3/8 in. (10 mm), or less, in diameter and 3/8 in. (10 mm), or less, in depth are not considered defects and they do not require repair.

3.6.1.10.2 Major defects are defined as, any defect which does not meet the definition of a minor defect or minor defects which, in aggregate, comprise more than 2% of the surface area of the barrier section.

3.6.1.11 Repair of hardened concrete shall be as follows:

a. Minor Defect Repair. Repair shall be made with a Fast Set Non-shrink Patching Mortar appearing on the Qualified Products List. Methods of repair shall be acceptable to the Engineer. The color of the repaired portion shall match as nearly as practicable, the color of the surrounding concrete. Repaired portions shall exactly match shape requirements.
b. Major Defect Repair. Major defect repair methods shall be pre-approved by the Engineer.

3.6.2 Permanent Cast-in-Place Barriers. Cast-in-place barriers shall be constructed by either the “fixed forms” or “extrusion or slip form” method or a combination, at the Contractor’s option.

3.6.2.1 General

3.6.2.1.1 Contraction joints shall be formed or saw cut normal to the pavement. The spacing shall be every 20 ft., as shown on the plans or as ordered by the Engineer. The joints shall conform to the dimensions as shown on the plans or standard sheets. If the joints are saw cut, they shall be saw cut so no damage to the concrete will result, within a maximum time of 8 hours. If sawing or forming joints is performed before the concrete has hardened, the adjacent portions of the barrier shall be supported firmly with close fitting shields. The liquid curing compound, if used, shall be reapplied at the saw cut.

3.6.2.1.2 Expansion joints shall be formed normal to the pavement with Preformed Expansion Joint Filler and shall provide for expansion of 1/2 in. (13 mm). The filler material shall be cut to conform to the cross section of the barrier.

3.6.2.1.3 The expansion joints shall be located at all immovable objects (bridge substructures, etc.), where shown on the plans, and/or as directed by the Engineer. Expansion joints shall not be required at regular intervals unless shown on the plans.

3.6.2.2 Fixed Form Barriers

3.6.2.2.1 Forms and subgrade shall be thoroughly moistened in conformance to 520.3. Care shall be taken that form construction has been completed, embedment of required materials placed and removal of all foreign materials completed before the concrete is placed.

3.6.2.2.2 Concrete shall be placed in its final position. Excessive movement of concrete by use of vibrators will not be permitted.

3.6.2.2.3 Concrete shall not be dropped a distance of more than 5 feet unless contained within a tremie, elephant trunk or other approved system.

3.6.2.2.4 Concrete shall be consolidated as provided in 520.3.5.4 by means of high frequency internal vibrators with 15 minutes after it is deposited in the forms. Vibrators shall not be attached to, or held against the forms or the reinforcing steel. Care shall be taken to avoid the displacement of reinforcement.

3.6.2.2.5 In the event of an emergency where placement continuity is affected, the Engineer will decide if a construction joint will be allowed and will direct the Contractor as to the location and manner in which the joint is to be constructed.

3.6.2.2.6 Concrete shall be cured in compliance with 520.3.10. Forms shall not be removed for a period of 3 days or as directed.

3.6.3 Precast Barriers.

3.6.3.1 Fabrication of precast units shall be performed by an approved commercial precasting plant. The provisions of 104.01 and 105.05 shall apply.

3.6.3.2 Fabrication inspection of the precast barrier will be performed by the Department. A concrete mix design shall be prepared by the manufacturer and approved by the Engineer prior to fabrication. The Contractor shall notify the Engineer at least 72 hours before casting barriers so that the necessary arrangements may be made for the Engineer to be present for inspection of the casting. The casting date shall be shown on the bottom of each piece.

3.6.3.3 The length of individual precast sections shall not exceed 20 feet unless otherwise permitted. The length of individual sections of any one run shall be approximately the same. Precasting tolerance will allow no variations of more than 1/4 inch in any plan dimension.

3.6.3.4 Unless shown on the plans, the Contractor's proposed method for joining and anchoring the sections shall be submitted for approval. Steel shapes exposed to weathering shall be galvanized.

3.6.3.5 Compaction of the concrete into a dense uniform mass shall be accomplished by internal vibration to provide a smooth surface relatively free of voids. External vibration may be used when permitted.

3.6.3.6 Care shall be taken to insure that inserts including reinforcing steel remain in their proper locations. Ends of the individual sections shall be smooth and perpendicular to the top surfaces.

3.6.3.7 Curing. Concrete shall be water cured in compliance with Section 520. Water cured barrier shall not be shipped until the barrier has cured a minimum of 7 days. Steam curing of the barriers shall be as follows:

3.6.3.7.1 The Contractor shall furnish sufficient canvas and framework or other type of housing to completely enclose the concrete barrier sections so that the curing temperatures can be controlled.

3.6.3.7.2 Live steam shall be introduced into the enclosure through a series of steam jets which shall be evenly spaced within the enclosure and in no case shall the steam jet impinge directly on the concrete formwork.

3.6.3.7.3 The initial set of the concrete shall take place before steam is applied.

3.6.3.7.4 The steam shall be maintained at 100 percent relative humidity to prevent loss of moisture and to provide excess moisture for proper hydration of the cement.

3.6.3.7.5 During the application of the steam, the ambient air temperature shall increase at a rate not to exceed 40 degrees F per hour until a temperature of 160 degrees F is reached. Curing at 160 degrees F shall continue until concrete test cylinders, prepared at the time of placing, and cured under the same temperature and moisture conditions have attained 80 percent of the expected compressive strength.

3.6.3.7.6 Necessary equipment for testing the cylinders shall be available at the fabricator's plant unless permitted otherwise.

3.6.3.7.7 When discontinuing steam, the ambient air temperature shall not decrease at a rate exceeding 40 degrees F per hour until the temperature has reached 20 degrees F above the temperature of the air to which the concrete will be exposed.

3.6.3.7.8 The concrete shall not be exposed to temperatures below freezing for 6 days after casting.

3.6.3.7.9 The precast barrier shall not be moved until 24 hours after casting. The precast sections must be in the position and location for curing prior to removing forms. The lifting hooks shall not be used to move the barrier until curing is complete. Handling shall at all times be performed in a manner to prevent damage to the concrete.

3.6.3.8 Portable concrete barrier for traffic control. Portable concrete barriers for traffic control shall include relocating the barriers on the project as well as transporting the barriers to and from the project.

3.7 Handrail.

3.7.1 Fabricate handrails to the dimensions and details shown on the plans.

3.7.2 Top railing shall be continuous throughout entire length of railing, except as noted in 3.7.4.

3.7.3 Interconnect handrail members by butt-welding or welding with internal fittings. Welding shall conform to ANSI/ AWS D 1.1 Chapter 10, Tubular Structures. At tee and cross connections notch ends of intersecting members to fit contour of pipe to which end is joined and weld all around,

3.7.4 Form simple and compound curves by bending pipe in jigs to produce uniform curvature; maintain cylindrical cross-section of pipe throughout entire bend without buckling, twisting, cracking or otherwise deforming exposed surfaces of pipe.

3.7.5 The Contractor shall install the pipe and hardware for handrail as shown or ordered.

3.7.6 Anchor posts in preset sleeves or drilled holes. Sleeves or holes shall be not less than 12 inches deep with an inside diameter not less than 1/2 inch greater than the outside diameter of the post. Sleeves shall have a steel plate closure welded to the bottom and a friction fit, removable cover designed to keep the sleeve clean and hold the 1/2 inch below the finished surface of concrete or mortar rubble masonry.

3.7.7 Set handrail accurately in location, alignment and elevation with edges and surfaces level, plumb and true. Fill annular space between posts and sleeve or holes with grout.

3.7.8 Damage to galvanized surfaces during erection shall be repaired by pretreating the damaged surface with with SSPC-SP1, Solvent Cleaning, using zinc phosphate or a light acid without attacking the zinc, to remove soluble contaminants, and abrasive blasting or other mechanical means to remove insoluble contaminants such as zinc hydroxide (i.e. white rust) and to thoroughly roughen the entire surface and produce a uniform anchor profile of 1 to 1.5 mils (25 to 38 m) without removing the zinc layer. Alternate pretreatments or tie-coats may be considered if recommended by the coatings manufacturer and approved by the Department.. The surface shall then be painted with 2 coats of zinc-rich primer. The second coat shall not be applied until the first coat has been approved.

3.7.9 Provide slip joint expansion joints, at intervals not to exceed 40 feet, located within 6 inches of posts. Slip joint shall be formed with an internal sleeve extending inches beyond the joint on either side with the sleeve securely fastened to one side.

3.7.10 Handrail shall be installed in a timely manner to ensure pedestrian safety.

Method of Measurement

4.1 The accepted quantities of guardrail, new, temporary or reset, will be measured by the unit, or by the linear foot to the nearest 0.1 of a foot, as follows:

4.1.1 Corrugated beam guardrail indicated as "standard section" will be measured by the linear foot as shown on the plans. Terminal units and bridge approach units will each be measured by the unit.

4.1.2 Wood guardrail, pipe guardrail and double faced beam guardrail will be measured from end to end of rail by the linear foot. Measurement includes to the end of terminal sections unless otherwise shown on the plans.

4.1.3 Steel beam for beam guardrail, including hardware will be measured by the linear foot.

4.1.4 Post replacements and assemblies for beam guardrail posts will be measured by the each.

4.1.5 Handrail will be measured from end to end of rail by the linear foot, to the nearest 0.1 foot.

4.2 Anchorages shown on the plans as integral parts of terminal units paid for by the unit will not be measured separately; other anchorages as specified, both new and reset, will be measured by the number of units installed.

4.3 Measurement of the temporary beam guardrail and temporary terminal units of the type specified will be in accordance with 4.1.

4.4 The accepted quantities of concrete barrier, permanent or portable for traffic control, will be measured by the linear foot as follows:

4.4.1 Permanent concrete barrier will be measured by the foot to the nearest 0.1 of a foot from end to end along the top of the barrier section, as shown on the plans.

4.4.2 Portable concrete barrier for traffic control will be measured by the linear foot for barrier ordered and delivered to the project. Relocating portable concrete barriers on the project will not be measured.

Basis of Payment

5.1 The accepted quantities will be paid for at the contract unit price for terminal units and bridge approach units when separately specified, per linear foot for guardrail, and per each for anchorages other than anchorages included with terminal units for all types specified, complete and in place.

5.2 New material required for resetting guardrail, other than that damaged due to the Contractor's negligence, will be paid for as provided in 108.04.

5.3 The accepted quantity of permanent concrete barrier of the type specified and portable concrete barriers for traffic control will be paid for at the contract unit price per linear foot.

5.3.1 Relocating the barriers on the project and transporting the barriers to and from the project will be subsidiary.

5.3.2 Mortar for patching joints between units on permanent concrete barriers will be subsidiary when required.

5.3.3 Miscellaneous steel for connecting individual units or end units will be subsidiary.

5.3.4 Water repellant required on concrete barrier will be subsidiary

5.4 The accepted quantity of handrail will be paid for at the contract unit price per linear foot complete in place.

5.4.1 Grout will be subsidiary to handrail.

5.5 No separate payment will be made for any excavation required except for material classified as rock structure excavation and will be paid as provided for in Section 206 .

Pay Items and Units, Section 606 – Guardrail:

Item Number		**Unit**
606.000	Steel Rail (Galvanized) for Guardrail	Linear Foot
606.01A	Posts for Guardrail	Each
606.1AB0	Steel Beam Guardrail (Galvanized)	Linear Foot *
606.21AB0	Double-faced Steel Beam GR (Galvanized)	Linear Foot
606.1A51	Beam Guardrail (Terminal Unit Type MELT)	Unit
606.1A52	Beam Guardrail (Terminal Unit Type ELT)	Unit
606.1A54	Beam Guardrail (Terminal Unit Type EAGRT 50ft.)	Unit
606.1A55	Beam Guardrail (Terminal Unit Type EAGRT 25ft.)	Unit
606.1A7	Beam Guardrail Terminal Section G-2	Unit
606.411	Concrete Barrier, Single-Faced, Precast	Linear Foot
606.412	Concrete Median Barrier, Double-Faced, Precast	Linear Foot
606.4129	Modified Concrete Median Barrier, Precast	Linear Foot
606.417	Portable Concrete Barrier (for Traffic Control)	Linear Foot
606.421	Concrete Barrier, Single Faced, Cast in Place	Linear Foot
606.422	Concrete Barrier, Double Faced, Cast in Place	Linear Foot
606.4229	Modified Concrete Median Barrier, Cast-in-Place	Linear Foot

* Linear foot except that terminal units are by the unit.

A Type of Post

1 Light weight steel (S3x5.7)
2 Medium weight steel(W6x8.5)
3 Heavy weight steel (W6x15.5)
4 6 inch x 8 inch wood
5 Aluminum, size per plans
6 Contractor's Option, size per plans

B Post Spacing or Type of Unit (Spacing of terminal units is standardized on the plans and per manufacturer)
0 "Standard Section" with 6 foot - 3 inch spacing
5 Open
7 Terminal Unit G (with 6 foot - 3 inch spacing)
8 Bridge Approach Unit (with 4 foot- 2 inch spacing)

C Rail Material
0 Steel (Galvanized)

606.5A, B, C	Wood Guardrail	Linear Foot

A Type of Wood Rail

1 Single 6 inch x 8 inch
2 Double 6 inch x 8 inch
3 Double 4 inch x 6 inch

B Post Type

0 5 feet-8 inch x 8 inch square wood
1 6 feet-6 inch x 8 inch square wood
2 5 feet-9 inch x W6x8.5 steel
3 5 feet-9 inch x W6x15.5 steel
4 1 feet-5 inch x W6x15.5 steel
5 2 feet-5-1/4 inch x W6x15.5 steel

C Post Spacing

7 7 feet-6 inch
8 8 feet-0 inch

606.6 A, B, C Handrail

A Type

1 Stair
2 Ramp
3 Safety Rail

B Guard Required

0 No Guard
1 With Guard

C Material
1 Steel

606.82	Anchorages for Beam Guardrail	Each
606.83	Anchorages for Strong Beam Guardrail	Each
606.91	Resetting or Setting Guardrail	Linear Foot
606.92	Resetting Anchorages	Each
606.93	Temporary Beam Guardrail	Linear Foot

NOTES FOR FIGURES 606-2 TROUGH 606-4

LENGTH OF NEED IS THE TOTAL LENGTH OF A LONGITUDINAL BARRIER NEEDED TO SHIELD AN AREA OF CONCERN. TO DETERMINE THE LENGTH OF NEED, REFER TO THE *"ROADSIDE DESIGN GUIDE"* – AASHTO, LATEST ADOPTED VERSION.

DESIGNATIONS PROVIDED IN BRACKETS [ ] REFERENCE STANDARD ELEMENTS DETAILED IN *"A GUIDE TO STANDARDIZED HIGHWAY BARRIER HARDWARE"*, LATEST ADOPTED VERSION, AASHTO-AGC-ARTBA JOINT COOPERATIVE COMMITTEE.

THE RECTANGULAR PLATE WASHER [FWR03] IS USED ONLY FOR 37'-6" OF STANDARD SECTION UPSTREAM OF A TERMINAL UNIT TYPE G-2 (SEE STANDARD NO. GR-10).

USE 12'-6" LENGTH RAIL ELEMENT IN CURVES OF LESS THAN 300' RAIL RADIUS.

WHEN GUARDRAIL IS INSTALLED BEHIND CURB, EITHER 6'-0" BEHIND SLOPE CURB ON A CURBED RAMP OR AT THE BACK OF SIDEWALK WITH BARRIER CURB, THE RAIL HEIGHT SHALL BE SET FROM THE GRADE AT THE FACE OF RAIL.

6. POSTS SHORTER THAN THE 7-' 0" INDICATED ON THE DETAIL, BUT NOT LESS THAN 6'-0", MAY ONLY BE USED WHEN
   A) THE SLOPE BEHIND THE GUARDRAIL IS NO STEEPER THAN 4:1
   B) WHERE THE DISTANCE FROM THE BACK OF THE POST TO THE BREAK OF THE SLOPE IS A MINIMUM OF 2'-0"
   C) AND THEN ONLY AS APPROVED OR SPECIFICALLY SHOWN ON THE PLANS.

7. TO INSTALL THE 7' 0" POSTS IN ROCK FILL AREAS AND IN AREAS OF OTHER DIFFICULT SITE CONDITIONS, METHODS SUCH AS AUGURING, EXCAVATING, AND OTHER MORE UNUSUAL METHODS MAY BE REQUIRED FOR INSTALLING POSTS. THOSE CONDITIONS AND THE REQUIREMENT FOR UNUSUAL METHODS OF POST INSTALLATION ARE NOT CONSIDERED JUSTIFICATION FOR REDUCING THE EMBEDMENT DEPTH OF THE POSTS AND WILL NOT BE APPROVED AS SUCH.

GUARDRAIL NOTES

S:\DWG\DETAILS\606-1 GRSTANDARD.DWG

FIGURE 606-1

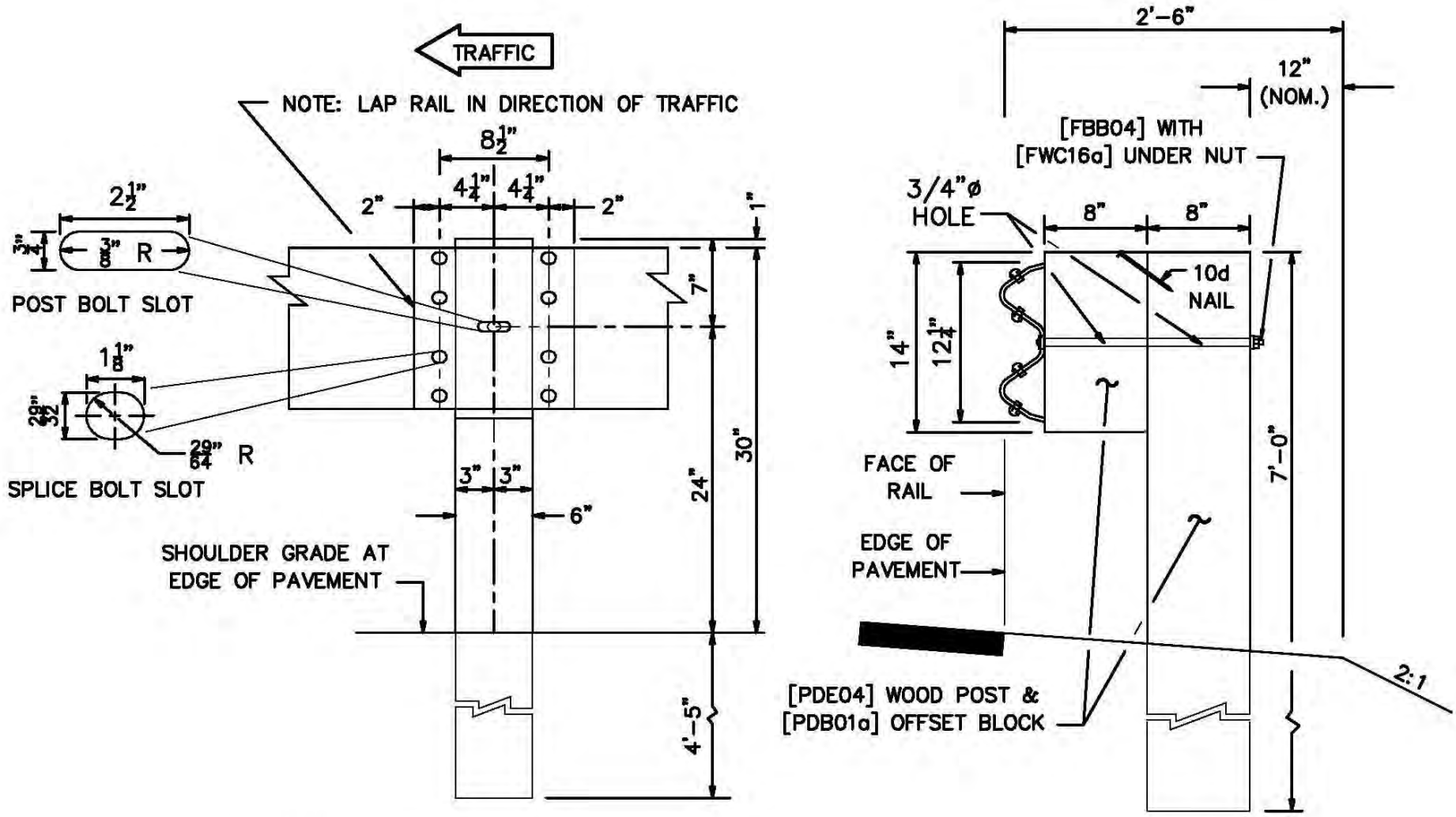

LINE POST ELEVATION VIEW AT BEAM SPLICE

(SHOWN WITHOUT FASTENERS)

TYPICAL SIDE VIEW

(SHOWN WITH FASTENERS)

STANDARD GUARDRAIL SPLICE

S:\DWG\DETAILS\606-1 GRSTANDARD.DWG

NOT TO SCALE

FIGURE 606-2

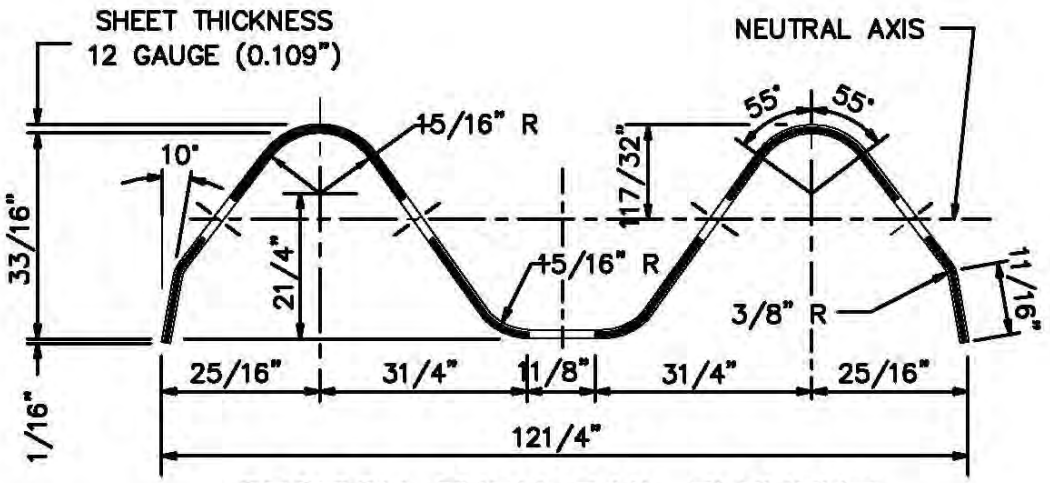

SECTION THRU RAIL ELEMENT

[RWM02a (12'-6") OR RWM22a (25'-0")]

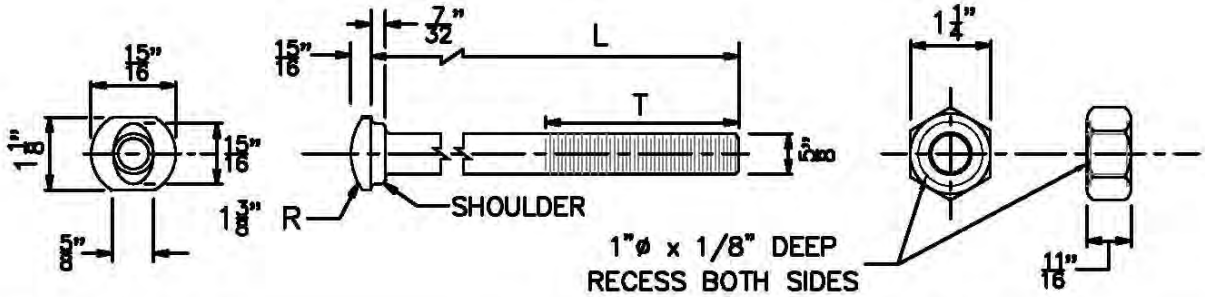

DESIGNATOR	L	T	INTENDED USE
FBB01	1 1/4"	FULL LENGTH THREAD	RAIL SPLICE BOLTS
FBB02	2"	1 3/4" MIN. THREAD LENGTH	POST BOLT (STEEL POSTS)
FBB03	10"	4" MIN. THREAD LENGTH	POST BOLT
FBB04	18"	4" MIN. THREAD LENGTH	POST BOLT (WOOD POSTS)

5/8" BUTTON HEAD BOLT AND RECESSED NUT

[FBB01-04]

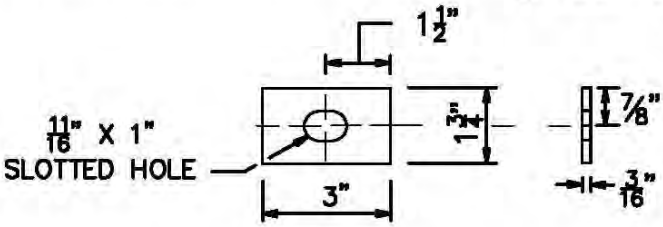

RECTANGULAR PLATE WASHER

[FWR03] (6 REQ'D)
(SEE NOTE NO. 3)

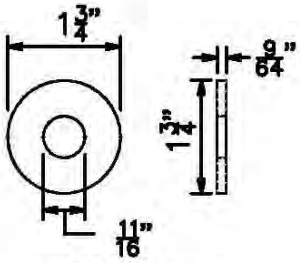

WASHER

[FWC16a]

STANDARD GUARDRAIL HARDWARE

S:\DWG\DETAILS\606-1 GRSTANDARD.DWG

NOT TO SCALE
FIGURE 606-3

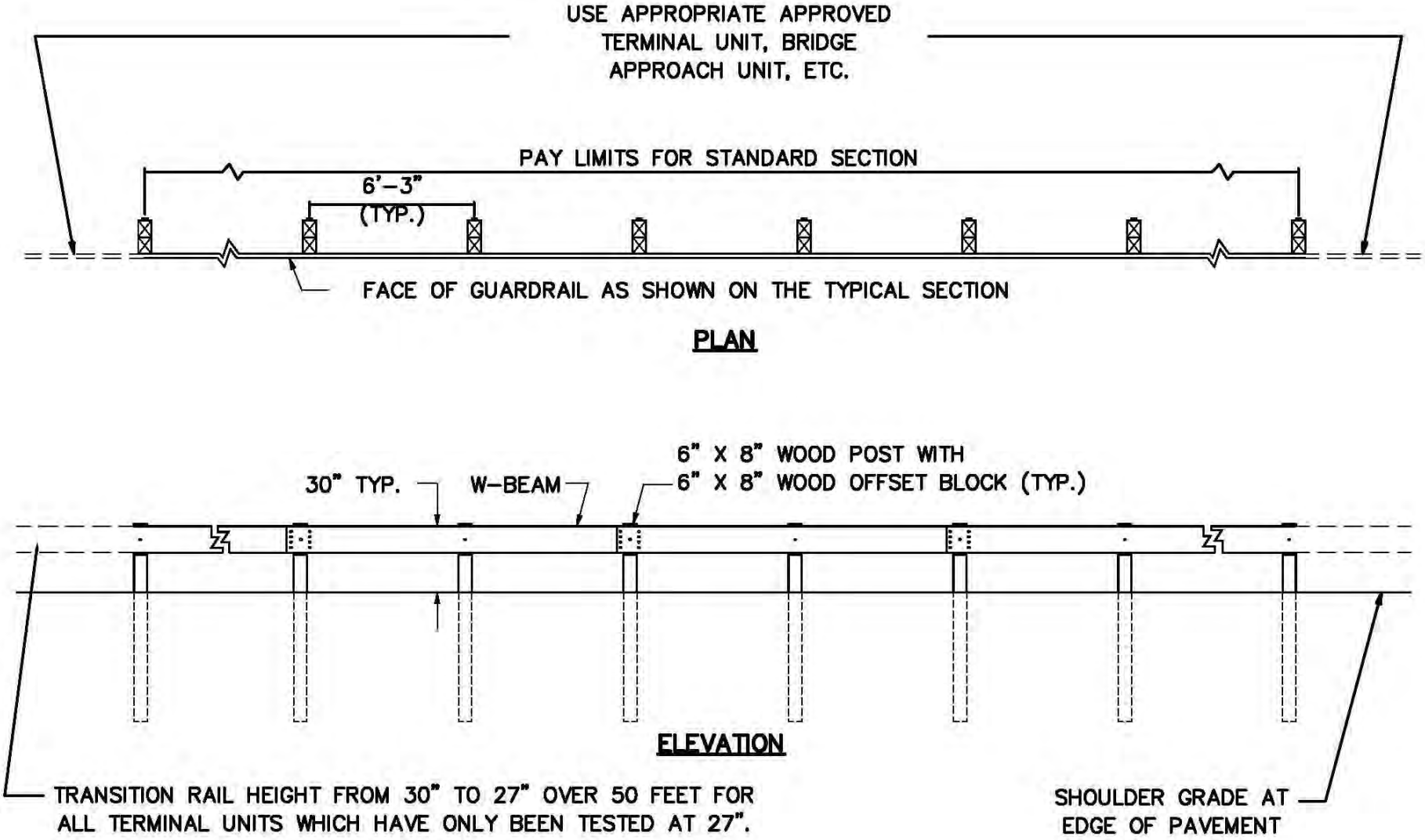

STANDARD SECTION

S:\DWG\DETAILS\606-1 GRSTANDARD.DWG

NOT TO SCALE
FIGURE 606-4

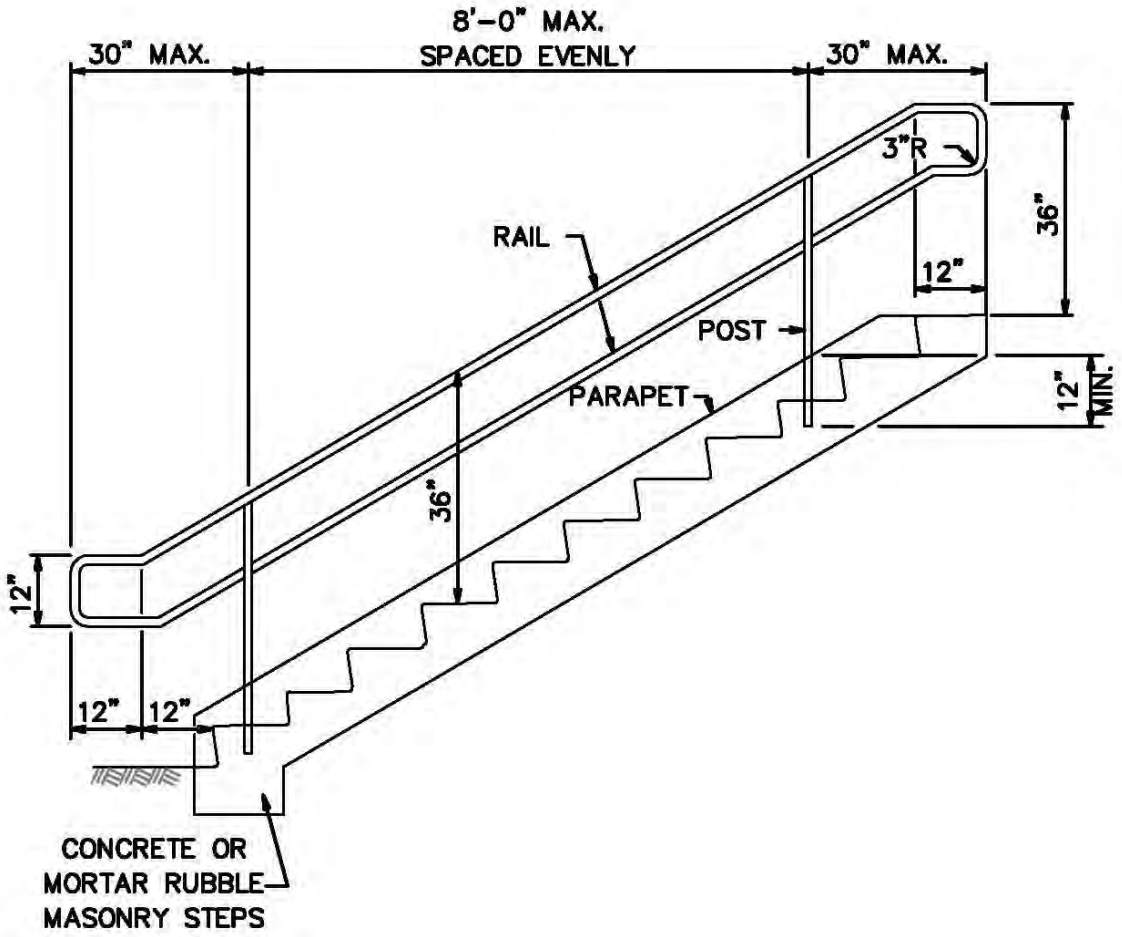

GENERAL NOTES

1. RAIL SHALL BE 1-1/4" TO 1-1/2" O.D.
2. POSTS SHALL BE 1-1/4" NOMINAL.
3. POSTS SHALL BE CENTERED IN PARAPET OF STEPS.
4. HANDRAILS SHALL BE INSTALLED ON BOTH SIDES OF STEPS.
5. THE MINIMUM SPACING BETWEEN HANDRAILS IS 3'-0", MAXIMUM 5'-0".
6. ITEM 606.610X - STAIR HANDRAIL, (MATERIAL).

STAIR HANDRAIL

S:\DWG\DETAILS\606 HANDRAIL.DWG

NOT TO SCALE

FIGURE 606-5

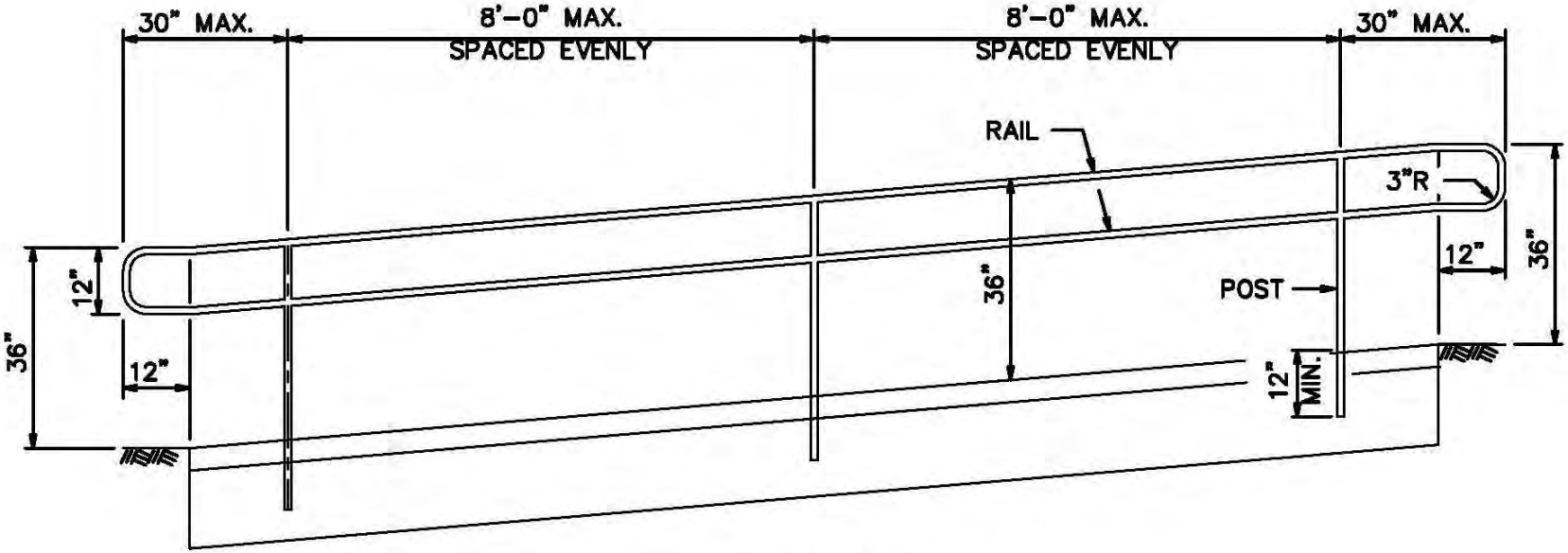

ELEVATION

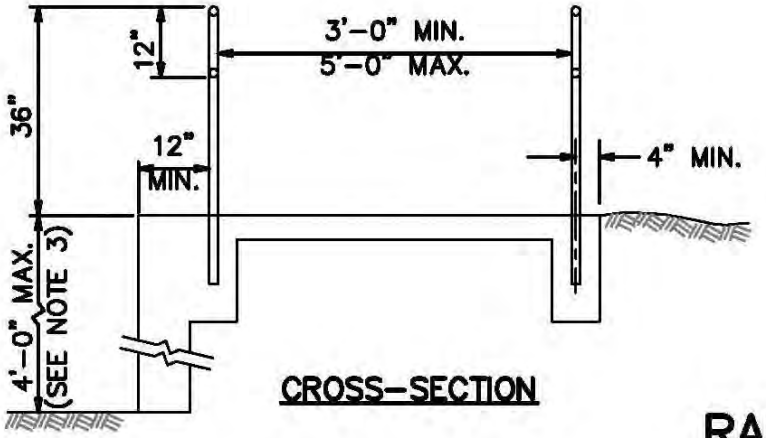

CROSS-SECTION

GENERAL NOTES

1. RAIL SHALL BE 1-1/4" TO 1-1/2" O.D.
2. POSTS SHALL BE 1-1/4" NOMINAL.
3. WHEN THIS DIMENSION EXCEEDS 4'-0" A GUARD IS REQUIRED (SEE FIGURE 606-7).
4. ITEM 606.620X - RAMP HANDRAIL, (MATERIAL).

RAMP HANDRAIL

S:\DWG\DETAILS\606 HANDRAIL.DWG

NOT TO SCALE

FIGURE 606-6

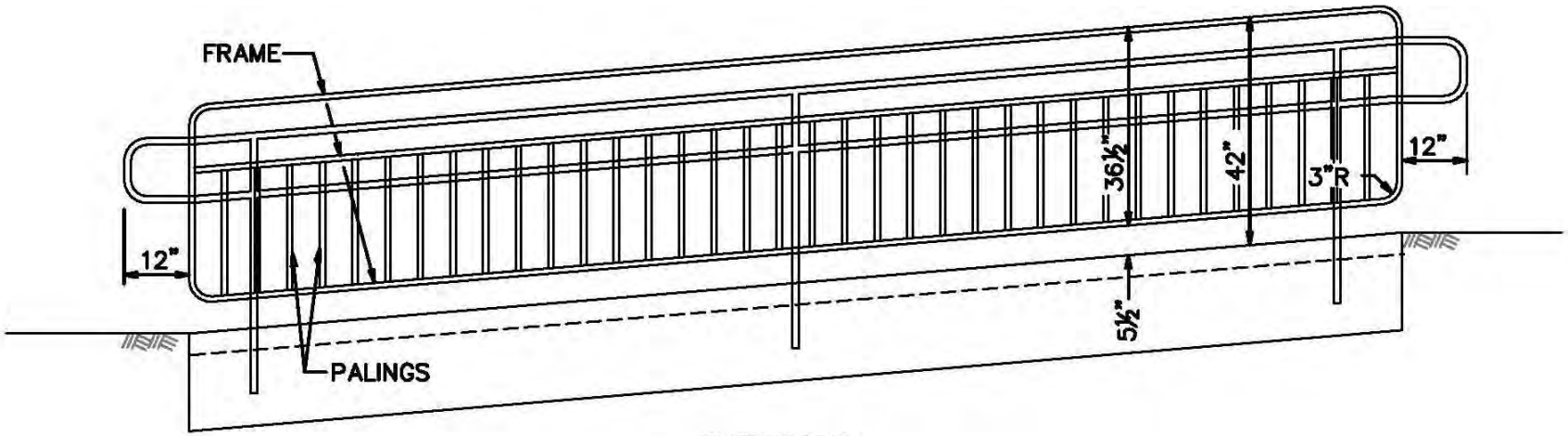

ELEVATION

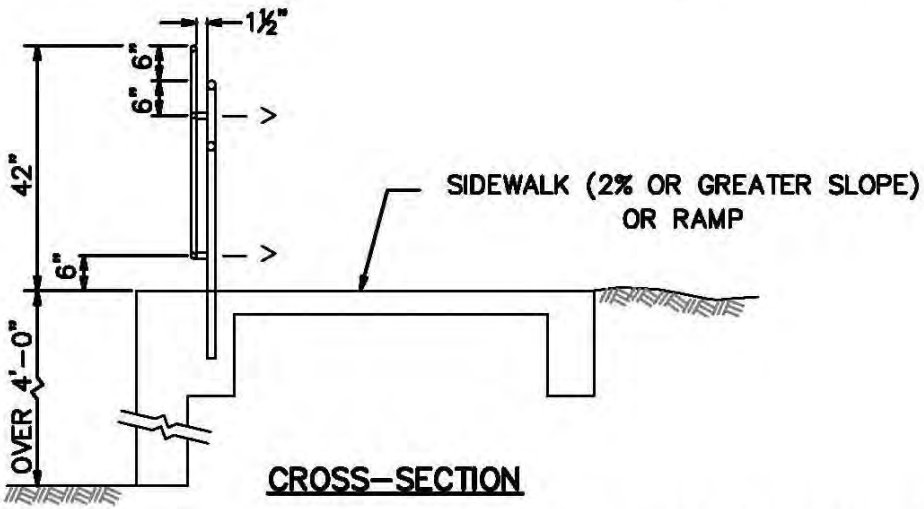

CROSS-SECTION

GENERAL NOTES

1. FOR DETAILS OF HANDRAIL, SEE FIGURE 606-6.
2. FRAME AND CONNECTORS TO HANDRAIL SHALL BE 1" NOMINAL.
3. PALINGS SHALL BE 3/4" NOMINAL SPACED 6" ON CENTER.
4. ITEM 606.611X – STAIR HANDRAIL W/ GUARD, (MATERIAL); 606.621X – RAMP HANDRAIL W/ GUARD, (MATERIAL).

RAMP HANDRAIL WITH GUARD

S:\DWG\DETAILS\606 HANDRAIL.DWG

NOT TO SCALE

FIGURE 606-7

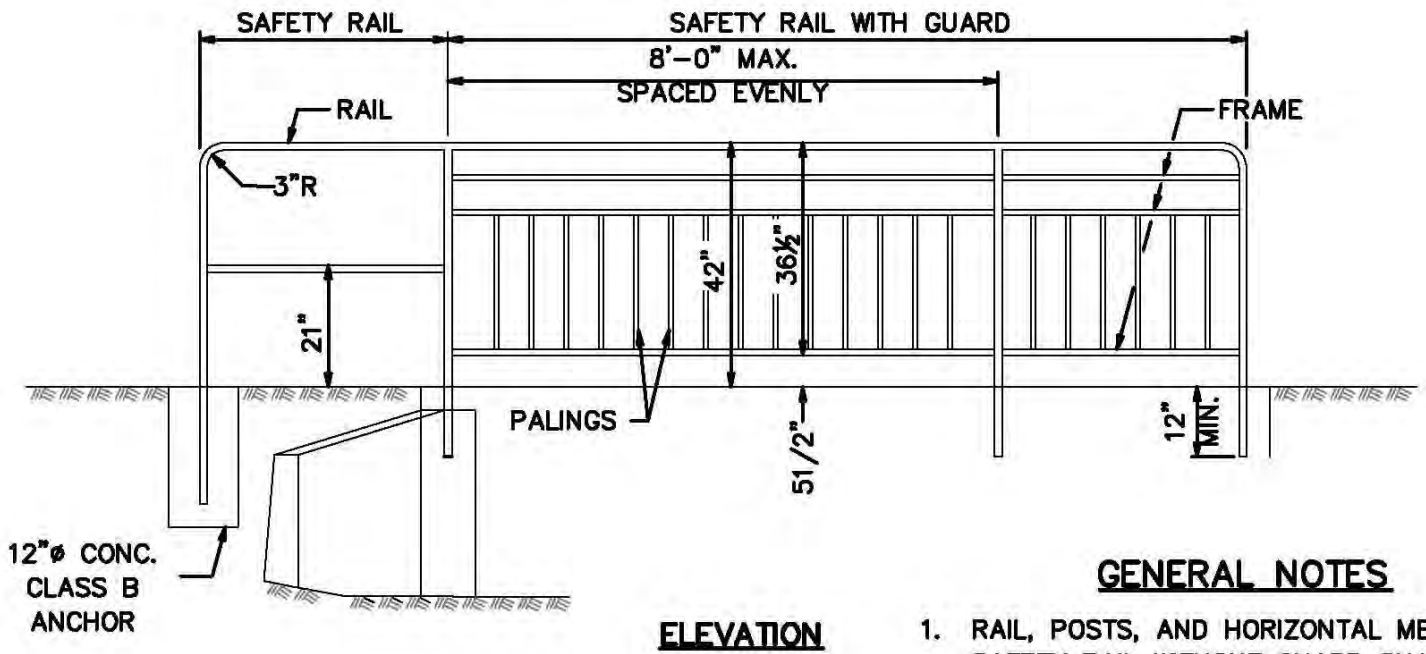

ELEVATION

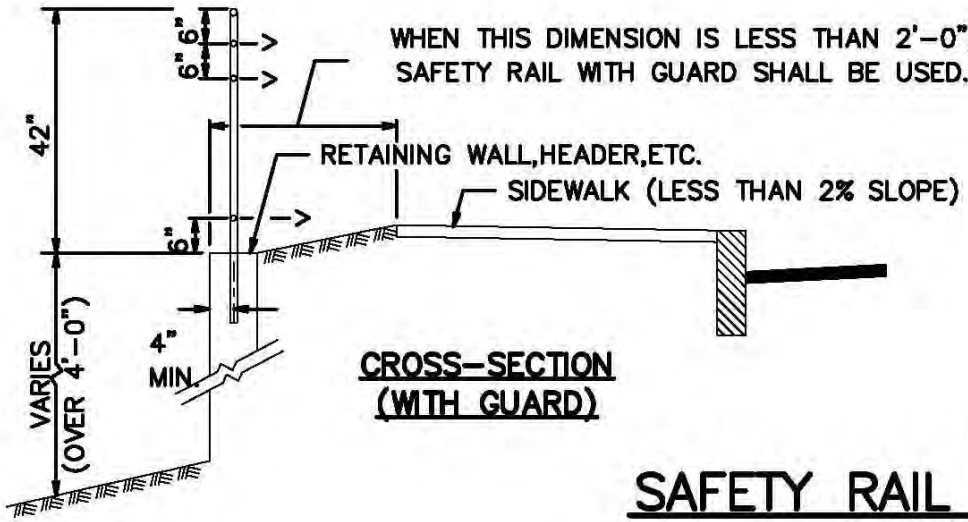

CROSS-SECTION (WITH GUARD)

GENERAL NOTES

1. RAIL, POSTS, AND HORIZONTAL MEMBER OF SAFETY RAIL WITHOUT GUARD SHALL BE 11/4" NOMINAL.
2. FRAME SHALL BE 1" NOMINAL.
3. PALINGS SHALL BE 3/4" NOMINAL SPACED 6" ON CENTER.
4. ITEM 606.630X – SAFETY RAIL, (MATERIAL); 606.631X – SAFETY RAIL W/ GUARD, (MATERIAL).

SAFETY RAIL WITH GUARD

S:\DWG\DETAILS\606 HANDRAIL.DWG

NOT TO SCALE

FIGURE 606-8

SECTION 607 – FENCES

Description

1.1 This work shall consist of the constructing, removing and resetting railings, fences, and gates as shown on the plans or as ordered. This work shall include furnishing and installing the required electrical grounds.

Materials

2.1 Woven Wire Fence.

2.1.1 Wire shall conform to ASTM A 116, Design No. 1047- 12-11. Minimum coating shall meet Class 1.

2.1.2 Steel posts and angle braces shall conform to ASTM A 499 and A 702. Posts shall be galvanized and shall be in accordance with AASHTO M 111. Fittings, hardware and other appurtenances not specifically covered by the plans and specifications shall be standard commercial grade, manufactured in accordance with current standard practice.

2.1.3 Tie wires and wire clips shall be of equivalent size and coating as specified in 2.1.1.

2.1.4 Gates. Gate posts shall conform to 2.1.2. Wire shall conform to 2.1.1. The frame, center brace, diagonal tension rod, and hardware shall conform to the standards shown on the plans.

2.2 Chain Link Fence.

2.2.1 Chain link fence shall conform to AASHTO M 181.

2.2.2 Unless otherwise stipulated, fencing material shall be 9 gauge 2 inch mesh, Type II or Type IV fabric. The specific diameter for Type IV fabric is the metallic coated diameter and the PVC coating shall not be used when determining wire size. All vinyl-coated fabric used on the project shall be the same shade of color called for on the plans.

2.2.2.1 Fabric up to and including 60 inches high shall be knuckled at the top and bottom selvages. Fabric over 60 inches high shall be twisted and barbed on the bottom selvage and knuckled on the top selvage.

2.2.3 Metallic coated steel posts, rails, or gate frames shall conform to AASHTO M 181 Grade 1 or Grade 2. Miscellaneous fittings and hardware shall conform to AASHTO M 181 Section 29.

2.2.4 Tension bars shall not be less than 0.25 by 0.75 inches.

2.2.5 Wire ties and clips for fastening fabric to posts and top rail shall be of the same material and the same or larger gauge as the fabric.

2.3 Barbed wire. Barbed wire, unless otherwise specified, shall be fabricated from 2 ply 12-1/2 gauge, class 3 zinc- coated steel wire, with 14 gauge 4-point barbs spaced not more than 5 inches apart, and shall meet the requirements of ASTM A 121.

2.4 Additional materials required for resetting railings or fencing or both shall conform in quality and type to the materials in the existing fence.

2.5 Concrete shall conform to Section 520.

2.6 Protective coating for contact surfaces of aluminum and concrete shall be either zinc-chromate primer, or an approved bituminous paint meeting FSS TT-C-494.

Construction Requirements

3.1 General.

3.1.1 The Contractor shall perform such clearing and grubbing as may be necessary to construct the fence to the required grade and alignment.

3.1.2 At locations where breaks in a run of fencing are required, or at intersections with existing fences, appropriate adjustment in post spacing shall be made.

3.1.3 The fence shall be permanently connected to the existing fence as shown in the plan or as approved by the Engineer.

3.1.4 Posts, braces, or anchors shall be embedded in concrete and temporary guys or braces may be required to hold the posts in proper position until such time as the concrete has set sufficiently to hold the posts. Unless otherwise permitted, no materials shall be installed on posts or strain placed on guys and bracing set in concrete until 3 days have elapsed from the time of placing of the concrete.

3.1.4.1 The portions of aluminum posts which will be in contact with concrete shall be coated both inside and outside with protective coating to 1 inch above the top of the concrete. The paint shall be allowed to dry for at least 24 hours before the concrete is placed.

3.1.4.2 In wet areas when it is impractical to place concrete, steel drive anchor assemblies may be required.

3.1.5 All posts shall be set plumb and firm and to the required grade, spacing, and alignment. Cutting of the posts will be allowed only with the approval of the Engineer.

3.1.6 When it is necessary to drill into rock to set a steel post, the post may be shortened, provided a minimum length of 12 inches of post is grouted in the rock.

3.1.7 At each location where an electric transmission, distribution, or secondarily line crosses any of the types of metal fences covered by these specifications, the fence shall be grounded as required by the electric utility company.

3.1.7.1 At locations where electric lines run parallel and in close proximity to metal fences, grounding systems may be required by the electric utility company.

3.1.8 Where it is impractical to conform the fence to the general contour of the ground, as at ditches, the opening beneath the fence shall be closed as ordered.

3.1.9 All surplus material and other debris shall be removed.

3.2 Woven Wire Fence.

3.2.1 The wire shall be stretched so that not more than 1/2 of the hump is removed from the horizontal wire. The top and bottom wire and alternate parallel interior wires shall be fastened at every post in such a manner that each interior wire shall have a fastening at every other post.

3.2.1.1 Runs of woven wire fence 600 feet or less in length shall be erected with not more than one splice between post assemblies. Except as otherwise provided, splicing the wire will be permitted at posts only. Each horizontal strand of wire shall be wrapped completely around posts at post assemblies and shall be securely fastened by winding the end of the wire about the same strand where it leads up to the post. Other devices designed specifically to splice fencing wire may be used when approved. Post assemblies shall be constructed at all corners, ends, gates, at extreme sags or humps in grade, and at ends of 600 foot lengths of fencing.

3.3 Chain Link Fence.

3.3.1 The fence shall be erected so that the bottom is between 1 and 2 inches above the ground.

3.3.1.1 The top rail shall pass through the post tops to form a continuous brace from end to end of each section of fence, and shall be securely fastened to the posts at post assemblies by suitable clamps.

3.3.1.2 Post assemblies as shown on the plans shall be installed at ends, at corners or changes in line where the angle of deflection is 30 degrees or more, at abrupt changes in vertical grades where pull posts are required, and at gates. Moreover, at least one post assembly shall be installed for every 500 feet of run.

3.3.1.3 Braces shall be spaced approximately midway between the top and the ground, and extend to the first line post. Braces shall be securely fastened to posts by suitable clamps.

3.3.1.4 Truss rods shall be installed as shown on the plans.

3.3.2 Unless otherwise shown on the plans, when barbed wire is required, arms shall be installed outward.

3.3.3 Fabric shall be fastened to the post with suitable fabric bands, stretcher bar bands, and hook bolts and to the top rail with tie wires as shown on the plans. The fabric shall be free from sags and bends.

3.3.4 All holes within 2 feet of the fence shall be filled with suitable approved material and compacted properly.

3.4 Temporary fence. Fences holding livestock shall be promptly replaced by temporary fencing, with no extra compensation, during the time between the removal of the old fence and the erection of the new fence. Fencing meeting the specifications for the project may be used in its permanent location after having been used as temporary fence, provided the fencing has not been damaged.

3.5 Gates. Gates shall be firmly and securely erected in accordance with the recommendations of the manufacturer and as directed.

3.6 Resetting. The existing railing or fencing shall be carefully removed, transported and reset at the required location. The reset railing or fencing shall be at least equivalent in strength and appearance to the original railing or fencing. Additional materials such as fittings or hardware shall be furnished and installed as necessary.

3.7 Barbed wire. The installation of barbed wire along the right-of-way is not allowed (see RSA 236:15).

Method of Measurement

4.1 All fence, new or reset, will be measured by the linear foot, to the nearest 0.1 of a foot. Measurement will be along the top of the fence for each continuous run.

4.1.1 Woven wire fence and chain link fence will be measured from center to center of end posts or gate posts as the case may be.

4.1.2 Railing reset will be measured from end to end of rail.

4.2 Post assemblies of the kind specified will be measured by the number of units. A unit shall consist of the post and all its required hardware and anchorages.

4.3 Gates will be measured as complete units of the size and type specified.

Basis of Payment

5.1 The accepted quantities of fencing of the type specified and of the height required will be paid for at the contract unit price per linear foot, complete in place. This unit price shall include the cost of furnishing all labor, tools and equipment to satisfactorily complete the work and shall include excavation, concrete or steel drive anchor assemblies, posts, hardware, fencing and any repair of material damaged by the Contractor's operation. Gates and post assemblies, complete in place, shall be paid for as units. Clearing necessary to provide space for erecting the fencing will be paid for as provided under Item 201.6.

5.2 The accepted quantity of railing or fencing reset will be paid for at the contract unit price per linear foot complete in place, except that the cost of furnishing additional materials, including new post concrete embedment, required through no fault of the Contractor will be paid for as Extra Work. Removing old concrete embedment from the posts will be subsidiary to the resetting item.

Pay Items and Units, Section 607 – Fences:

607	.A	B	CD	EF	Item Number	
	.A				Type of Item	
					3= Fence	Linear Foot
					4 =Post Assemblies	Each
					5=Single Gate	Unit
					6=Double Gate	Unit
					7=Bar Gate	Unit
					9=Resetting	Linear Foot
		B			Type of Material	
					1=Woven Wire Fence	
					2=Chain Link Fence w/Aluminum Coated Steel Fabric	
					3= Chain Link Fence w/Vinyl Coated Steel Fabric	
					4= Stockade Fence, Wood	
					5=Stockade Fence, Vinyl	
					6= Post and Rail	
					7=Picket Fence	
					8=Misc. Fence Types (Iron, Barbed, etc.)	
			CD		Height of Fence (in Feet and Inches, 10+ use 1)	
				EF	Width of Gate Opening (in Feet and Inches, 10+ use 1)	

Examples:

607.3146	Woven Wire Fence 4’-6” High	Linear Foot
607.4380	Post Assemblies for Chain Link Fence with Vinyl Coated Steel Fabric, 8’ High	Each
607.52801	Single Gate Chain Link Fence with Aluminum Coated Steel Fabric,12’ Wide X 8’ High	Unit
607.78001	Steel Bar Gate, 20’ Wide	Unit
607.9480	Resetting Wood Stockade Fence, 8 Feet high	Linear Foot

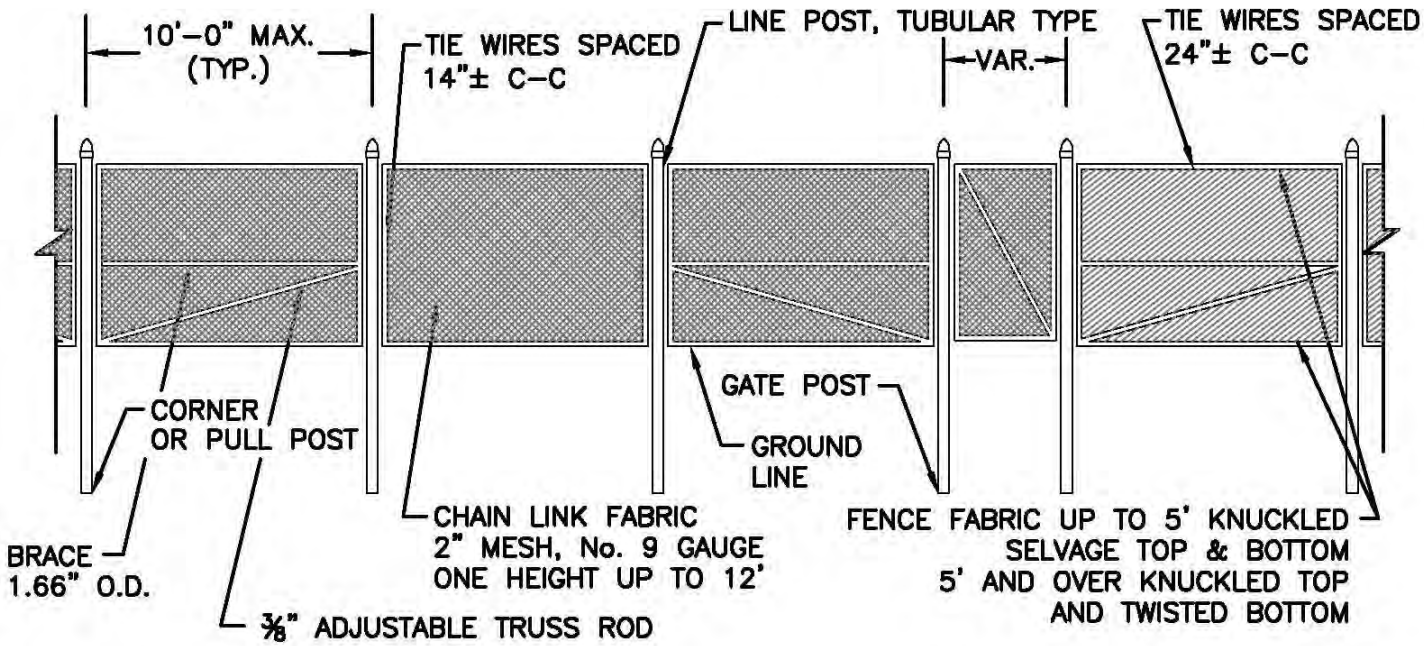

NOTE:

ALL END POSTS SHALL HAVE ONE BRACE; ALL CORNER AND INTERMEDIATE BRACE OR PULL POSTS SHALL HAVE TWO BRACES, WITH A MAXIMUM SPACING BETWEEN POST ASSEMBLIES OF 500 FEET.

FOR ALL POSTS SEE FOOTING DETAIL.

FOR FENCE ERECTION ON THE RIGHT-OF-WAY LINE, SEE WOVEN WIRE FENCE DETAIL.

DESIGN IS FOR STEEL, ALUMINUM OR VINYL COATED FENCING.

CHAIN LINK FENCE

S:\DWG\DETAILS\607-1 CHAIN1.DWG

NOT TO SCALE

FIG. 607-1

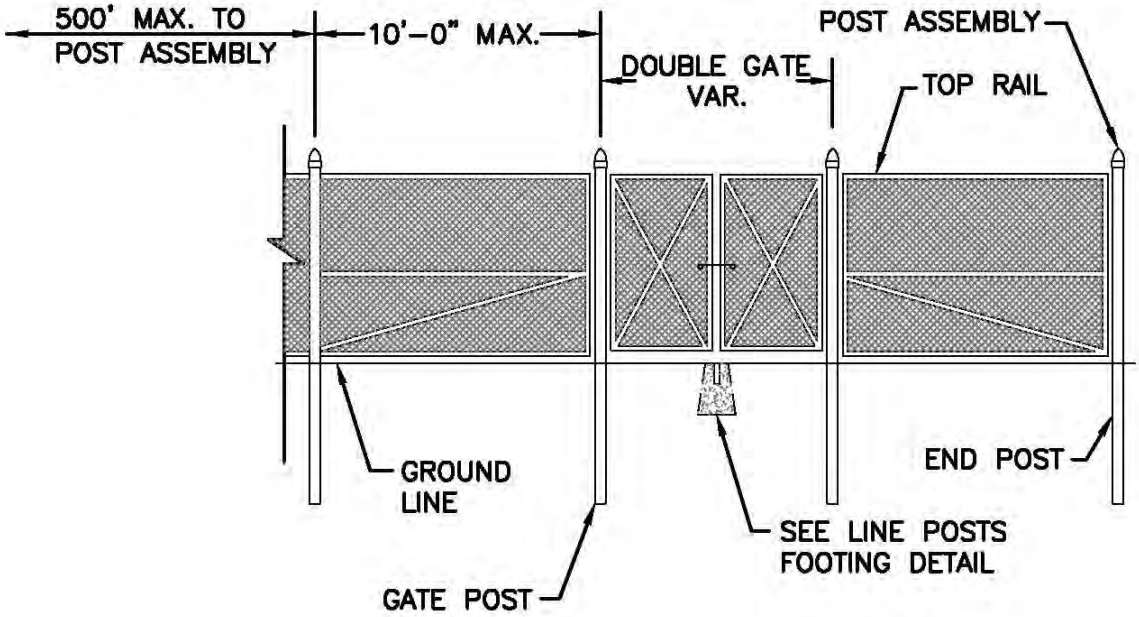

TOP RAILS		
FENCE HEIGHT	TUBULAR	
	HEIGHT	LBS/FT
STEEL		
ALL	2⅞" O.D.	5.79
ALUMINUM		
UP TO 12'	2⅞" O.D.	2.00

CHAIN LINK FENCE–POST ASSEMBLIES

S:\DWG\DETAILS\607-2 CHAIN2.DWG

NOT TO SCALE

FIG. 607–2

NOTE:

WHERE GROUND CONDITIONS PERMIT, FORMS FOR FOOTING WILL NOT BE REQUIRED.

ALUMINUM POSTS IN CONCRETE SHALL HAVE A PROTECTIVE COATING. SEE 607.2.6

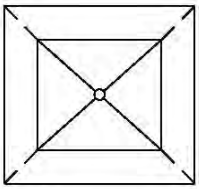

TOP VIEW

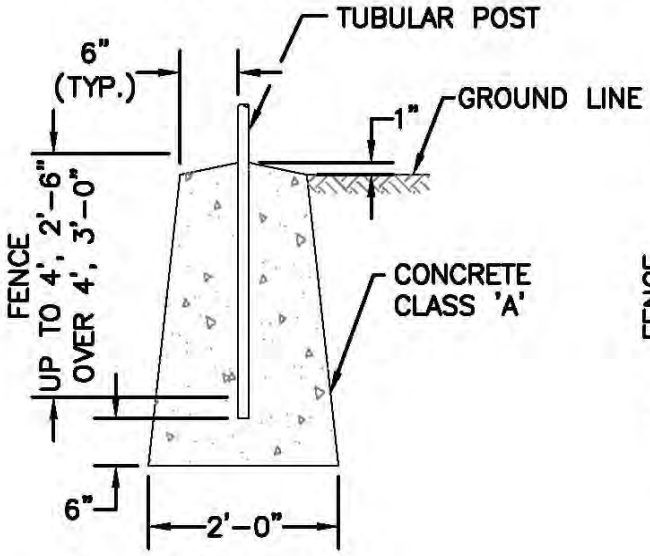

END, CORNER, GATE OR PULL POST

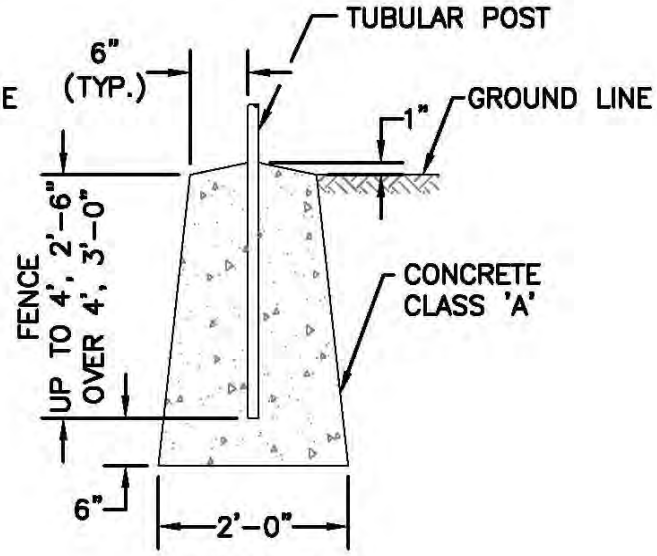

LINE POST

FOOTING DETAIL (WITH FORM)

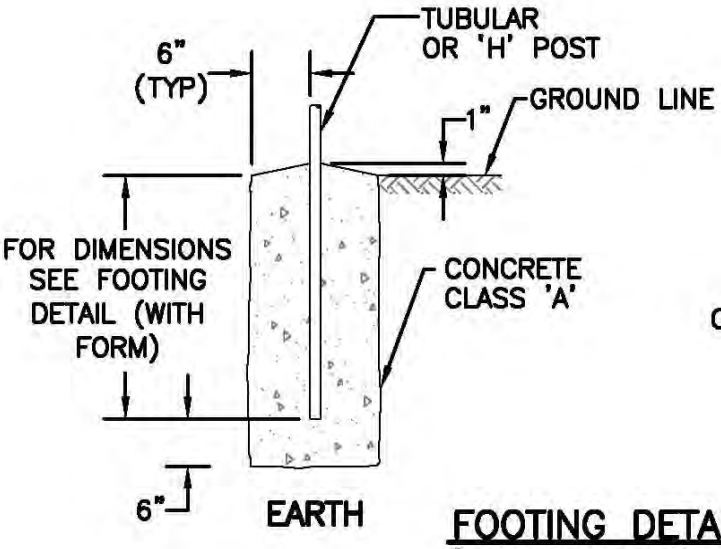

EARTH

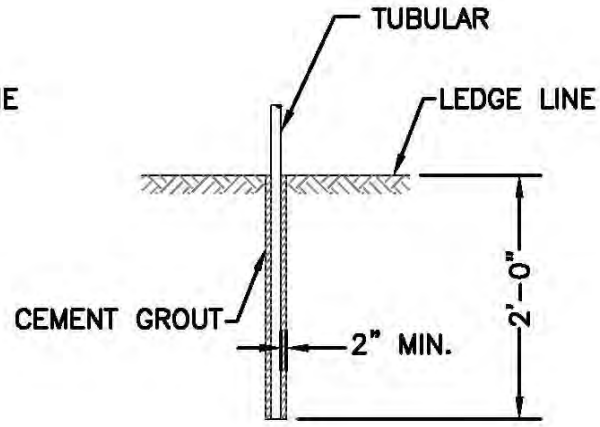

LEDGE

FOOTING DETAIL (WITHOUT FORM)

FOOTING DETAIL FOR CHAIN LINK FENCE

S:\DWG\DETAILS\607-3 CHAINFTG.DWG

NOT TO SCALE

FIG. 607-3

END, CORNER, AND PULL POST				
FENCE HEIGHT	TUBULAR			
	ROUND	lb/sf	SQUARE	lb/sf
STEEL				
UP TO 6'	2⅜" O.D.	3.65	2" x 2"	3.60
OVER 6'	2⅞" O.D.	5.79	2½"x2½"	5.70
ALUMINUM				
UP TO 12'	2⅞" O.D.	2.00	3" x 3"	1.76

LINE POSTS		
FENCE HEIGHT	TUBULAR	
	ROUND	lb/sf
STEEL		
UP TO 6'	1.90" O.D.	2.72
OVER 6'	2⅜" O.D.	3.65
ALUMINUM		
UP TO 12'	2⅜" O.D.	1.26

STEEL SWING GATE AND POST TABLE						
TYPE	GATE OPENING		GATE POST (TUBULAR)			
	SINGLE	DOUBLE	ROUND	lb/ft	SQUARE	lb/ft
A	UP TO 6'	UP TO 12'	2⅞" O.D.	5.79	2⅛"x2⅛"	5.70
B	OVER 6' TO 13'	OVER 12' TO 26'	4" O.D.	9.11	3" x 3"	7.55
C	OVER 13' TO 18'	OVER 26' TO 36'	6⅝" O.D.	18.97	–	–
D	OVER 18'	OVER 36'	8⅝" O.D.	28.55	–	–
GATE FRAME	UP TO 6'		1.66" O.D.	2.27	1½"x1½"	1.90
	OVER 6'		1.90" O.D.	2.72	2" x 2"	2.72

ALUMINIUM SWING GATE AND POST TABLE						
TYPE	GATE OPENING		GATE POST (TUBULAR)			
	SINGLE	DOUBLE	ROUND	lb/ft	SQUARE	lb/ft
A	UP TO 6'	UP TO 12'	2⅞" O.D.	2.00	3" x 3"	7.55
B	OVER 6' TO 12'	OVER 12' TO 24'	4" O.D.	3.15	–	–
C	OVER 12' TO 18'	OVER 24' TO 36'	6⅝" O.D.	6.56	–	–
D	OVER 18' TO 32'	OVER 36' TO 44'	8⅝" O.D.	9.88	–	–
GATE FRAME – ALL			1.90" O.D.	2.72	2" x 2"	2.72

CHAIN LINK FENCE – POST DIMENSIONS

S:\DWG\DETAILS\607-4 CHAIN4.DWG

NOT TO SCALE

FIG. 607-4

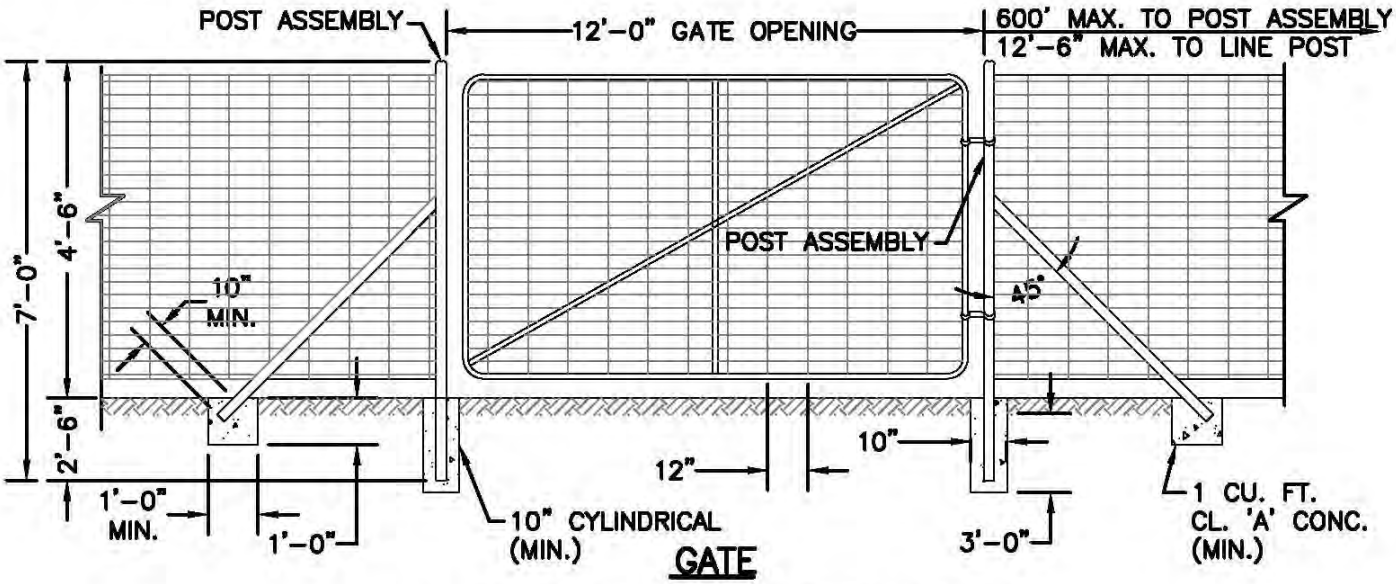

GATE

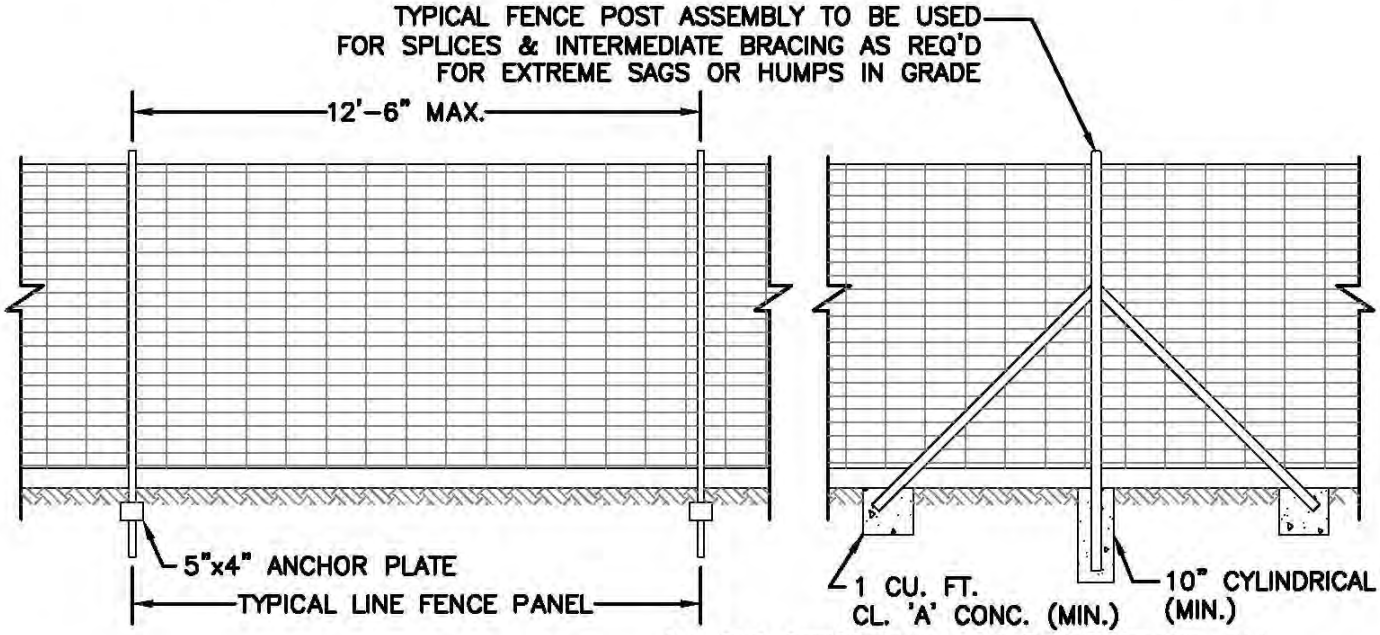

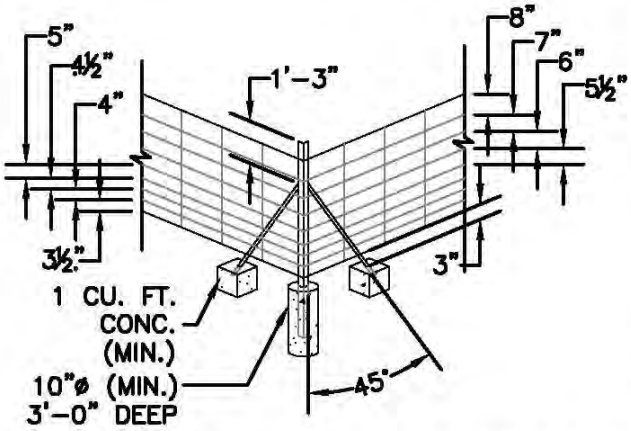

ALL END POSTS SHALL HAVE ONE BRACE; ALL CORNER AND INTERMEDIATE BRACE OR PULL POSTS SHALL HAVE TWO BRACES, WITH A MAXIMUM SPACING BETWEEN POST ASSEMBLIES OF 600 FT. INTERMEDIATE OR LINE POSTS SHALL BE STANDARD STUDDED TEE POSTS. MIN. WEIGHT 1.33 lb/lf.

END POSTS, CORNER POSTS, OR PULL POSTS SHALL BE ANGLE POSTS WITH A MIN. SECTION OF 2½"x2½"x¼" BRACES SHALL BE ANGLE POST WITH A MIN. SECTION OF 2"x2"x3/16".

WHERE GROUND CONDITIONS PERMIT, FORMS FOR FOOTINGS WILL NOT BE REQUIRED.

CONCRETE SHALL BE CL. 'A'.

DETAIL OF CORNER BRACE POST ASSEMBLY

WOVEN WIRE FENCE

S:\DWG\DETAILS\607-5 WWFENCE.DWG

NOT TO SCALE

FIG. 607-5

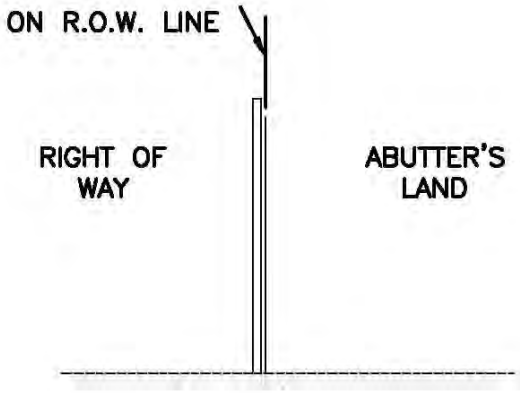

SECTION VIEW ON R.O.W. LINE

2½" x 2½" x ¼" ANGLE POST

WT. 4.1 lb./l.f. (NOMINAL)

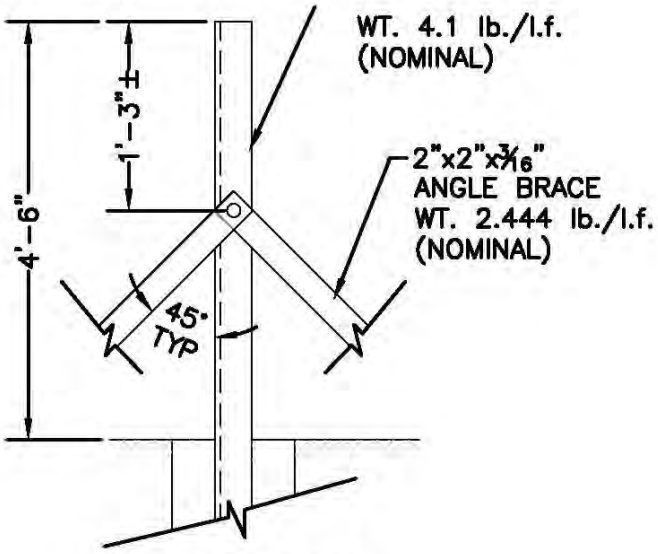

ELEVATION

TYPICAL FENCE POST ASSEMBLY

BRACING DETAILS

S:\DWG\DETAILS\607-6 WWFNCDET.DWG

NOT TO SCALE
FIG. 607-6

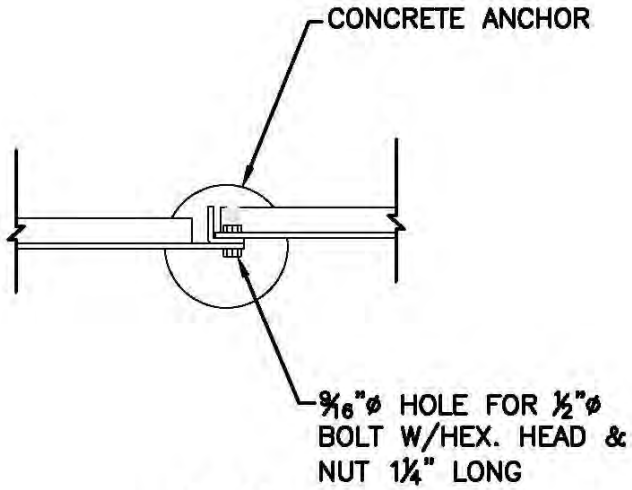

PLAN

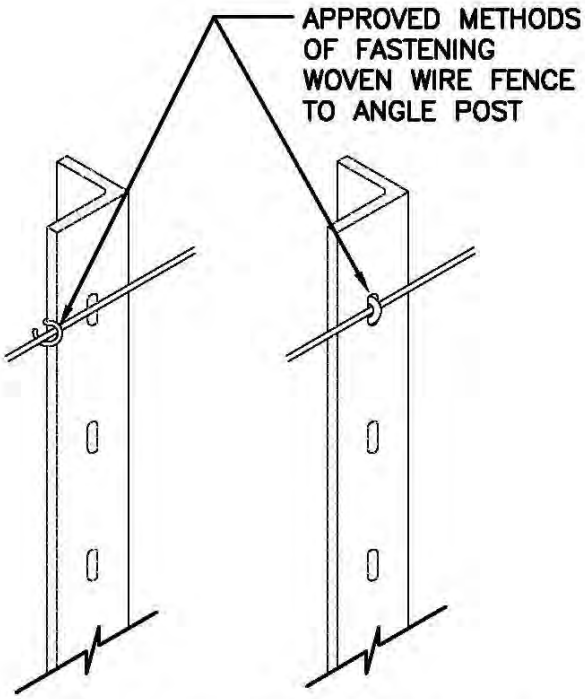

SLOTTED HOLE **SELF-FASTENING**

WIRE FASTENING DETAILS

S:\DWG\DETAILS\607-7 WWFNCDET.DWG

NOT TO SCALE
FIG. 607-7

SECTION 608 – SIDEWALKS

Description

1.1 This work shall consist of constructing sidewalks of either bituminous concrete, portland cement concrete, reinforced when specified, or brick pavers.

1.2 This work shall consist of furnishing and installing a detectable warning device and accessories on sidewalk ramps at locations shown on the plans, as specified herein, or as ordered including any and all required surface preparation.

1.2.1 Excluding unsignalized driveway crossings, detectable warnings shall be installed at sidewalk ramps where a sidewalk crosses a vehicular way, or where order by the Engineer.

Materials

2.1 Base course materials shall conform to 304.2.5.

2.2 Portland cement concrete shall be Class AA conforming to Section 520.

2.2.1 Coarse aggregate shall be standard size #67.

2.2.2 Protective coating shall conform to Section 534 .

2.3 Portland Cement Concrete Reinforcement

2.3.1 Steel mesh shall be in accordance with the Concrete Reinforcing Steel Institute with a minimum spacing of 6 x 6 - W 2.9 x W 2.9.

2.3.2 Synthetic Reinforcement shall be a fiber material admixture that is on the Qualified Products list.

2.3.3 Joint Filler shall conform to AASHTO M 213

2.4 Hot Bituminous Concrete

2.4.1 Material shall meet the requirements of Section 401 except that the composition of mixtures shall conform to the limits of Table 608- 1.

Table 608- 1 Composition of Mixtures - Master Ranges

Sieve Size	Percentage by Weight Passing	
	Binder Course	Wearing Course
1/2 inch	95 – 100	--
3/8 inch	90 – 100	98 – 100
No. 4	45 – 75	80 – 100
No. 8	32 – 53	45 – 70
No. 16	22 – 41	30 – 51
No. 30	14 – 33	21 – 38
No. 50	8-25	13 – 27
No. 200	2-6	2 – 6
Asphalt Cement Percent of Mixture	5.5 – 7.5	6.8 - 9

2.5 Granite Pavers

2.5.1 Pavers shall conform to ASTM C 170– Standard Test Method for Compressive Strength of Dimension Stone.

2.5.2 Granite shall be hard, durable, reasonably uniform in appearance and free from weakening seams. Solid veins of feldspar or quartz will not be cause for rejection.

2.5.3 Granite shall be a gray color typical of New Hampshire sources.

2.5.4 Granite pavers shall be 2-1/4-inch nominal thickness, sawn edges. Top surface shall be thermal finished.

2.5.5 All pavers are subject to inspection prior to delivery and at any time during construction. New and salvaged pavers may be rejected or culled out by the Engineer because of failure to meet nominal dimensions or because of breakage, chipping, cracking, structural defects or failure to meet the selected color range or texture.

2.6 Brick Pavers

2.6.1 **General**. Brick pavers shall be English Red City Hall Paver, by Stiles & Hart Brick Company, Bridgewater, Massachusetts, or approved equal. All brick pavers furnished shall conform with the following specifications.

1

2.6.1.1 Brick pavers furnished for sidewalk and crosswalk construction shall be 4” x 8” x 2- 1/4”(nominal) or 4” x 8” x 3”.

2.6.1.2 In repair areas, pavers of same size and thickness shall be used when possible. Use of 4” x 8” x 1-1/4” brick shall be allowed.

2.6.1.3 All brick shall have maximum tolerance of 1/16" in all dimensions

2.6.1.4 Minimum compressive strength of 8,000 psi

2.6.1.5 Maximum absorption of 4% or less at least 50 cycles of freeze/thaw per Section ASTM C67.

2.6.1.6 Materials used to manufacture brick pavers shall conform to the following:

2.6.1.6.1 Cement – ASTM C150 Portland Cement, Type 1;

2.6.1.6.2 Aggregates – ASTM C33 washed, graded sand and natural aggregates, no expanded shale of lightweight aggregates;

2.6.1.6.3 Coloring agent shall be iron oxide natural pigment.

2.6.1.7 All brick pavers furnished shall be sound and free of defects of any kind and shall be of the same dimension, color and texture as the samples submitted.

2.6.1.8 Prior to shipment to the site, the Contractor shall supply the Engineer with a sample of brick pavers intended for use. No brick pavers shall be permitted until submittal has been approved by the Engineer.

2.6.2 Brick for Mortar Setting on Concrete Bases.

2.6.2.1 Brick shall conform to ASTM C 902, Class SX, Type I, Application PS, sand struck, molded. Brick shall not be laminated.

2.6.2.2 Bricks may be supplied with or without a parafin coating (150°F) on the unsanded face. This is a CONTRACTOR option to facilitate removal of excess mortar materials from the finished I face of the brick.

2.6.3 Brick for Dry Setting on Bituminous Beds.

2.6.3.1 Brick shall conform to ASTM C 902, Class SX, Type I, Application PS, extruded, 4" x 8" x 2-1/4" (nominal).

2.6.3.2 Brick shall be selected to match the color and texture of existing pavers in areas to be reconstructed.

2.7 Mortar

2.7.1 Mortar shall conform to ASTM C 270, Type S, Conproco or approved equal and conform to ASTM C270. Mortar shall have a minimum 28-day compressive strength of 1800 psi.

2.7.2 Latex mortar admixtures shall be numbers 3701 and 4237 as manufactured by Laticrete International, Bethany, CT, or approved equal.

2.7.3 Color for jointing mortar shall be as manufactured by Laticrete, Davis or Scofield, or approved equal, and shall be as required to match existing sidewalks. Brick accent strips in new sidewalks shall have natural mortar color.

2.8 Isolation Joints

2.8.1 Isolation joint filler shall be polypropylene. Elastomeric sealant shall be self leveling polyurethane, color as noted on plan or determined by Engineer.

2.9 Tack Coat for Bituminous Setting Bed

2.9.1 Tack coat shall be a 2% neoprene latex modified asphalt, conforming to the following:

Table 608- 2 Bituminous Setting Bed Tack Coat – Properties

Mastic (Asphalt Adhesive)	
Solids (base)	75+/- 1%
Lbs/gal.	8-8.5 lb.
Solvent	Varsol (over 100□ F flash)
Base (2% Neoprene, 10% Asbestos-free Fiber, 88% Asphalt	
Melting Point – ASTM D-36	200□F min.
Penetration – 77□F 100 gram load 5 second (.1mm)	23-27
Ductility – ASTM D-113-44 @ 25□C 5 cms/per minute	125 cm min.

2.10 Premolded Joint Filler

2.10.1 Pre-molded joint filler shall conform with ASTM D 1752 for preformed sponge rubber and cork expansion joint fillers for concrete paving and structural construction.

2.10.2 Elastomeric sealant shall be a self leveling, two component polyurethane product of a color which approximates the color pattern of the adjoining brick pavers.

2.11 Joint Filler Sand

2.11.1 Method of joint filling shall be as specified on the plans. Material used shall be either:

2.11.1.1 A clean, fine sand with not less than 90% passing the #40 sieve and not more than 20% passing the #200 sieve.

2.11.1.2 A polymeric sand as manufactured by Gator Maxx or approved equal. Material shall be for use with a non-drainage or concrete foundation base system.

2.12 Hot Bituminous Pavement Setting Bed

2.12.1 The hot bituminous pavement setting bed shall conform to Section 401 and Section 403 of the City Standard Specifications.

2.13 Detectable Warning Devices

2.13.1 Material. Detectable warning devices shall be gray cast iron conforming to AASHTO M105 and AASHTO M306.

2.13.2 Color. Cast iron panels shall have no surface coating, and shall be allowed to transition to their natural patina.

2.13.3 Panel shall measure 24" in the direction of travel and may extend the full width of the sidewalk ramp. Minimum length (dimension perpendicular to direction of travel) of the panel shall depend on the size of ramp, but shall not be less than 48".

2.13.4 Detectable Warning Panel Truncated Dome Geometry:

2.13.4.1 Detectable warning devices shall be in full compliance with ADAAG guidelines, as revised and amended (Title 49 DFR Transportation, Part 37.9 Standard for Accessible Transportation Facilities, Appendix A, Section 4.29.2 – Detectable Warning on Walking Surfaces).

2.13.4.2 The truncated domes shall be arranged in a grid pattern and shall align properly from panel to panel.

2.13.5 Products shall be manufactured by East Jordan Iron Works, Inc., East Jordan, Michigan, Neenah Foundry Company, Neenah, Wisconsin or approved equal.

Construction Requirements

3.1 Bituminous Sidewalks.

3.1.1 Subgrade and Base Course. The subgrade shall be carefully graded and compacted. The base course material shall be spread and rolled to a smooth surface and to the required cross-section.

3.1.2 General. The plant, mixing methods, and hauling shall conform to the provisions of Section 401 . Sidewalks shall be constructed in accordance with Figure 608- 1.

3.1.2.1 Binder Course. The compacted binder course shall be 1 inch less in thickness than the total thickness of the sidewalk. This course shall not be less than 2 inches.

3.1.2.2 Wearing Course. The compacted wearing course shall be 1 inch in thickness.

3.1.3 Placing. The bituminous concrete shall be spread uniformly in two courses as specified above. Unless constraints deem otherwise, a paver designed for sidewalks shall be used to place the sidewalk pavement. Each course shall be rolled with a roller weighing between 500 pounds and 2,000 pounds. The finished surface shall be uniform in appearance, free from irregularities, and shall present a smooth surface. The edges shall be trimmed as directed to secure uniform lines.

3.1.4 Backfilling. The sides of the sidewalk shall immediately be backfilled as necessary with suitable material compacted and finished flush with the top.

3.2 Concrete Sidewalks.

3.2.1 Excavation shall be made to the required depth and to a width that will permit the installation and bracing of the forms. The foundation shall be shaped and compacted to a firm, even surface conforming to the section shown on the plans. All soft and yielding material shall be removed and replaced with acceptable material.

3.2.2 Forms shall be of wood or metal and shall extend for the full depth of the concrete. All forms shall be straight, free from warp, and of sufficient strength to resist the pressure of the concrete without springing. Bracing and staking of forms shall be such that the forms remain in both horizontal and vertical alignment until their removal.

3.2.3 The foundation shall be thoroughly moistened immediately prior to the placing of the concrete. Any standing water shall be removed before concrete is placed. The proportioning, mixing, and placing of the concrete shall be in accordance with 520.3.1

3.2.4 Steel mesh reinforcement, when required, shall be placed at mid depth or as shown on the plans, using the methods described in Section 544.

3.2.5 The concrete sidewalks shall be placed in alternate slabs 30 feet in length except as otherwise ordered.

3.2.6 Finishing.

3.2.6.1 Concrete shall be finished by use of wood, or magnesium floats, by skilled concrete finishers. A fine grained broom finish shall be applied to all concrete sidewalk subject to foot traffic.

3.2.6.2 All outside edges and joints shall be edged with an edging tool having a radius of 1/4 inch. All crack control joints in sidewalks subject to foot traffic shall be edged with a jointing tool.

3.2.7 Joints.

3.2.7.1 Transverse and longitudinal crack control joints shall be constructed by sawing, jointing tool or other approved method to a minimum depth of one third the slab thickness. If the jointing tool is not capable of constructing a joint to the correct depth, the joint shall be saw cut to the correct depth. Saw crack control joints as soon as concrete has hardened sufficiently to permit sawing without excessive raveling and before uncontrolled shrinkage cracking occurs, usually between four and twenty four hours. Control joints for cracking shall be spaced at 8 ft and 12 ft for slab thickness of 4 in and 6 in respectively, unless otherwise specified. Bond breaker shall be used at all construction joints.

3.2.7.2 Expansion joints shall be formed at any angles or intersections in the sidewalks, where the sidewalk abuts buildings and around all appurtenances extending into and through the sidewalk such as manholes and utility poles. Preformed expansion joint filler of the thickness indicated shall be installed for the full depth of the slab.

3.2.8 Concrete shall be cured for a minimum of 7 days. Curing compounds will not be permitted. Plastic sheets or other approved materials shall be placed in close contact with the finished concrete as soon as the concrete has set sufficiently to avoid damage from the placement of coverings. The protective covering shall be maintained vapor-proof in close contact with the concrete for the entire 7 day period. All traffic shall be excluded during the curing period. Vehicular traffic shall be excluded for such additional time as ordered.

3.2.9 Protective Coating. Protective coating shall be in accordance with 534.3.3. Portland cement concrete sidewalks shall be coated unless otherwise directed.

3.3 Brick or Brick Paver Sidewalks

3.3.1 General

3.3.1.1 This shall include all pavers set on bituminous beds and mortar set on concrete bases. All workmen shall be experienced in the installation of brick and granite masonry paving.

3.3.1.2 Substrate shall be verified that it is ready and acceptable to support pavers and traffic loads. Substrate elevations and slopes shall be per the plan.

3.3.1.3 Pavers shall be stored on raised platforms in such a manner as to prevent damage or intrusion of foreign matter. Storage piles or stacks shall be located to avoid or be protected from heavy or unnecessary traffic. Materials shall be stored under an approved roof or covered with waterproof tarpaulins, at all times, except when masons are working and using the materials.

3.3.1.4 The Engineer shall approve a mock up section of the work (10' length by full width) of the sidewalk prior to work taking place.

3.3.1.5 Where called for, layout of granite accent grid pattern shall be accomplished with chalk or string lines to prove a true and square layout.

3.3.1.6 If polymeric sand is called for to fill joints, installation shall be per manufacturer's directions.

3.3.2 Setting Bricks and Granite Pavers on Bituminous Bed

3.3.2.1 In reconstructed areas, existing pavers shall be removed and stockpiled 2-feet (minimum) beyond bituminous pavement match line. Existing bituminous bed shall be saw cut, removed and new bituminous pavement placed flush with existing bed. Isolation joint filler shall be installed as directed. The entire surface of the bituminous bed shall be clean of dirt and debris prior to placement of brick.

3.3.2.2 In new sidewalk areas, bituminous bed shall be placed to proper lines and grades with any accent block-outs accurately formed.

3.3.2.3 Install isolation joint filler as directed.

3.3.2.4 Sweep entire surface of bituminous bed clean of dirt and debris.

3.3.2.5 The tack coat shall be applied by squeegeeing or trowelling over the surface of the bituminous concrete setting bed. If trowelled, the trowel shall be serrated with serrations not to exceed 1/16 inch.

3.3.2.6 Bricks and granite shall be set in tack coat over the compacted bituminous concrete bed. Existing patterns to be matched.

3.3.2.7 Adjacent bricks and pieces of granite shall be placed "finger tight" with surface gaps of 1/16 inch.

3.3.2.8 Joints between bricks shall be filled as indicated on the plan.

3.3.2.9 Pre-molded joint filler and elastomeric sealant shall be installed in accordance with the manufactures recommended procedures.

3.3.3 Installation over Concrete Base

3.3.3.1 In existing sidewalk areas to be reconstructed, existing masonry at joint lines shall be saw cut to sound masonry and damaged masonry, concrete and debris removed. Place and compact crushed gravel as needed. Place and cure a 4-inch concrete slab to match existing. Moist cure for 14 days prior to installing brick pavers.

3.3.3.2 In new sidewalk areas, place and cure the concrete sidewalk to proper lines and grades with any accent block-outs accurately formed. Moist cure for 14 days prior to installing bricks.

3.3.3.3 After construction and curing of cement concrete base, the base shall be thoroughly cleaned of all dust, dirt and foreign matter prior to application of mortar setting bed.

3.3.3.4 The concrete base shall be thoroughly saturated with water before laying bricks and the surface of the slab shall be dry prior to application of mortar bed and bricks. The base shall be coated with a bond coat of Laticrete 3701, or approved equal, and neat cement just prior to placing the setting bed.

3.3.3.5 Bricks shall be laid in a full setting bed of mortar at the proper level, with the unsanded, waxed side up. Mortar shall be mixed with Laticrete 3701, or approved equal, in place of water. Trowel a mixture of one part Portland Cement and one part Silica Sand (or use Laticrete 211 pre-mix) wetted with Laticrete 4237, or approved equal, on the back of each pre-wetted paver and set the paver into the freshly installed setting bed, beating the paver level and true. Leveling of the paver should be done as the setting operation proceeds so that it is not necessary to disturb the pavers set earlier. Mortaring of joints should not proceed until the underbed sets and hardens (24 hours or more). Follow manufacturer's instructions for latex admixtures.

3.3.3.6 Joints shall be solidly filled to the full depth with mortar which has the colorant added as specified (existing sidewalks only). Joints shall be a nominal 3/8 inch to 1/2 inches wide. Care shall be taken not to smear mortar on adjoining brick, granite curbs, or other surfaces. Jointing mortar shall be mixed with Laticrete 3701, or approved equal, in place of water.

3.3.3.7 After the initial set of mortar, joints shall be finished by tooling with a one (1) inch diameter non-staining jointer (a hard maple jointer would be preferred) to produce a slightly concave polished joint, free from drying cracks.

3.3.3.8 After installation, the joints shall be cured for at least five days by covering with curing paper or other approved material.

3.3.3.9 After the joints have been cured, they shall be cleaned. If waxed, the wax shall be removed with high-pressure steam with equipment having the capacity of 150 gallons per hour, 325° coil temperature, at 120 psi. Care shall be taken not to damage mortar by overheating any area.

3.3.3.10 If waxed pavers are not used, the CONTRACTOR shall thoroughly clean the brick surface using mechanical means, soap and water. In extreme cases, an acid solution may be used, followed by thorough rinsing with fresh water. No mortar shall remain on the brick surfaces after cleaning operations.

3.3.3.11 All imperfect or frozen mortar joints shall be raked out to a depth of 3/8 inch and repointed.

3.3.3.12 No pavers shall be laid in inclement weather or when the temperature is 40°F, and dropping, nor shall any work be done on rising temperatures until the temperature reaches 40°F, and subgrade is free of frost.

3.3.3.13 Protect pavers from pedestrian and vehicular traffic for 72 hours, minimum, after joints are mortared.

3.4 Detectable Warning Devices

3.4.1 The Contractor shall submit manufacturer's descriptive literature for materials specified in accordance with 105.02.

3.4.2 Transport, storage, and handling of products shall be in accordance with manufacturer's instructions.

3.4.3 Install detectable warning devices and any anchoring hardware in accordance with manufacturer's instructions. Panels shall be set into a bed of 4 in wet fiber reinforced Class A concrete.

3.4.4 The edge of panel nearest the curb line shall be located 6 to 8 in (150 to 200 mm) from the inside face of the curbline.

3.4.5 Field cutting of panels is not permitted.

3.4.6 Care shall be taken to ensure the safety of pedestrians when sidewalks must remain in service during construction.

Method of Measurement

4.1 Sidewalks will be measured by the square yard of finished surface, computed to the nearest 0.1 of a square yard.

4.2 Detectable warning devices will be measured either as a unit or by the square foot, to the nearest whole square foot, based on actual panel size, complete in place.

4.3 Areas of curb will not be included in this item.

4.4 Base course material will be measured by the cubic yard based on the product of the area of sidewalk approved for payment and the depth shown on the plans or ordered.

Basis of Payment

5.1 The accepted quantities of sidewalks will be paid for at the contract unit price per square yard of the type and depth specified complete in place.

5.2 Base course material will be paid for under Section 304.

5.3 Necessary excavation will be paid for under Section 203

5.4 Protective coating for concrete shall be subsidiary.

5.5 Concrete bedding for detectable warning devices shall be subsidiary

5.6 Any sawcutting of pavement for the installation of detectable warning devices shall be subsidiary.

5.7 Detectable warning devices will be paid for at the contract unit price for the number of units of specific size installed or by the square foot of panel installed, complete in place.

Pay Items and Units, Section 608 – Sidewalks:

608.1_	__ Inch Bituminous Sidewalk	Square Yard
608.3_	__ Inch Reinforced Concrete Sidewalk	Square Yard
608.41	Brick Paver Sidewalk on Bituminous Bed	Square Yard
608.42	Brick Paver Sidewalk on Mortar Bed	Square Yard
608.51	Detectable warning device, 2’ X 4’, CI panel	Unit
608.52	Detectable warning device, CI panel	Square Foot

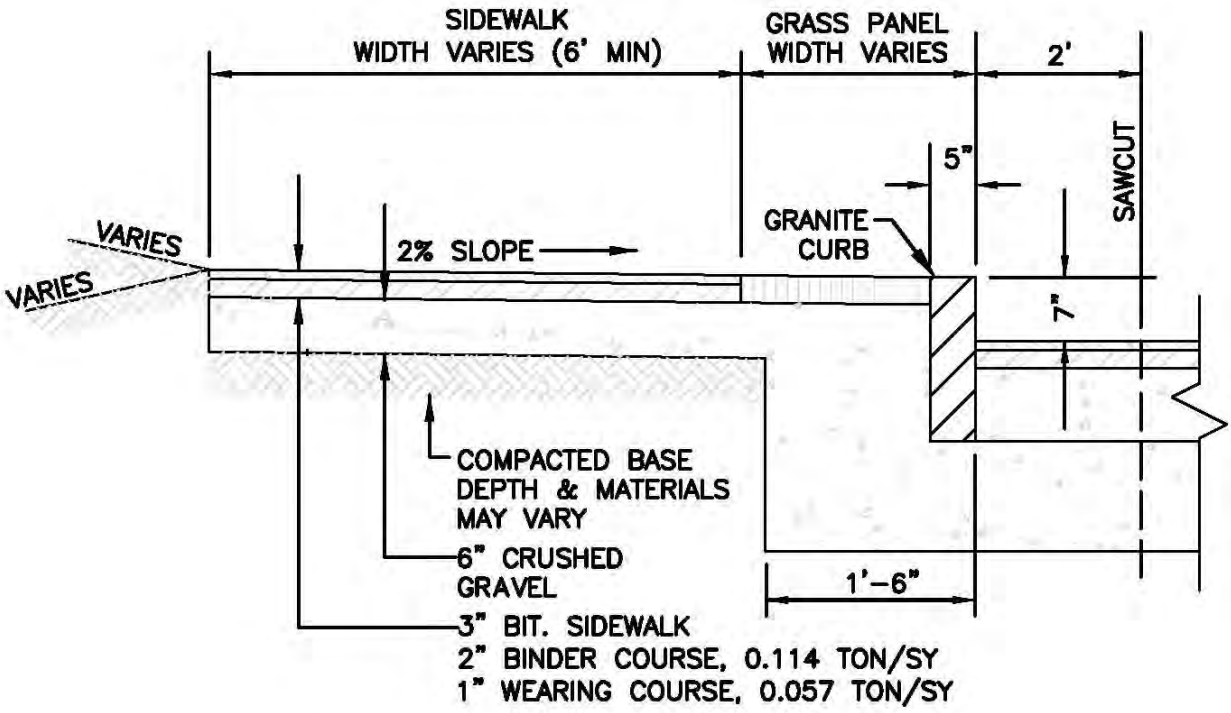

1. ALL PROPOSED NEW ROADWAYS SHALL USE A 6 FOOT SIDEWALK AND 4 FOOT GRASS PANEL CONFIGURATION.
2. LIGHT POLES AND MAILBOXES SHALL BE PLACED IN GRASS PANEL AREA. WHEN GRASS PANEL DOES NOT EXIST, THE WIDTH OF SIDEWALK BEHIND THE STRUCTURE SHALL NOT BE LESS THAN 5 FEET.
3. DEPENDING ON RIGHT OF WAY CONSTRAINTS AND OTHER LOCAL CONDITIONS, GRASS PANEL MAY BE REDUCED OR ELIMINATED, FINAL DETERMINATION TO BE MADE BY THE ENGINEER.
4. BINDER AND WEARING COURSES SHALL CONFORM TO MIX FORMULAS OUTLINED IN SECTION 608 OF THE STANDARD SPECIFICATIONS.

BITUMINOUS SIDEWALK

Q:\DWG\DETAILS\Streets-Sidewalks\608-1 SIDEWALK.DWG

NOT TO SCALE

FIGURE 608-1

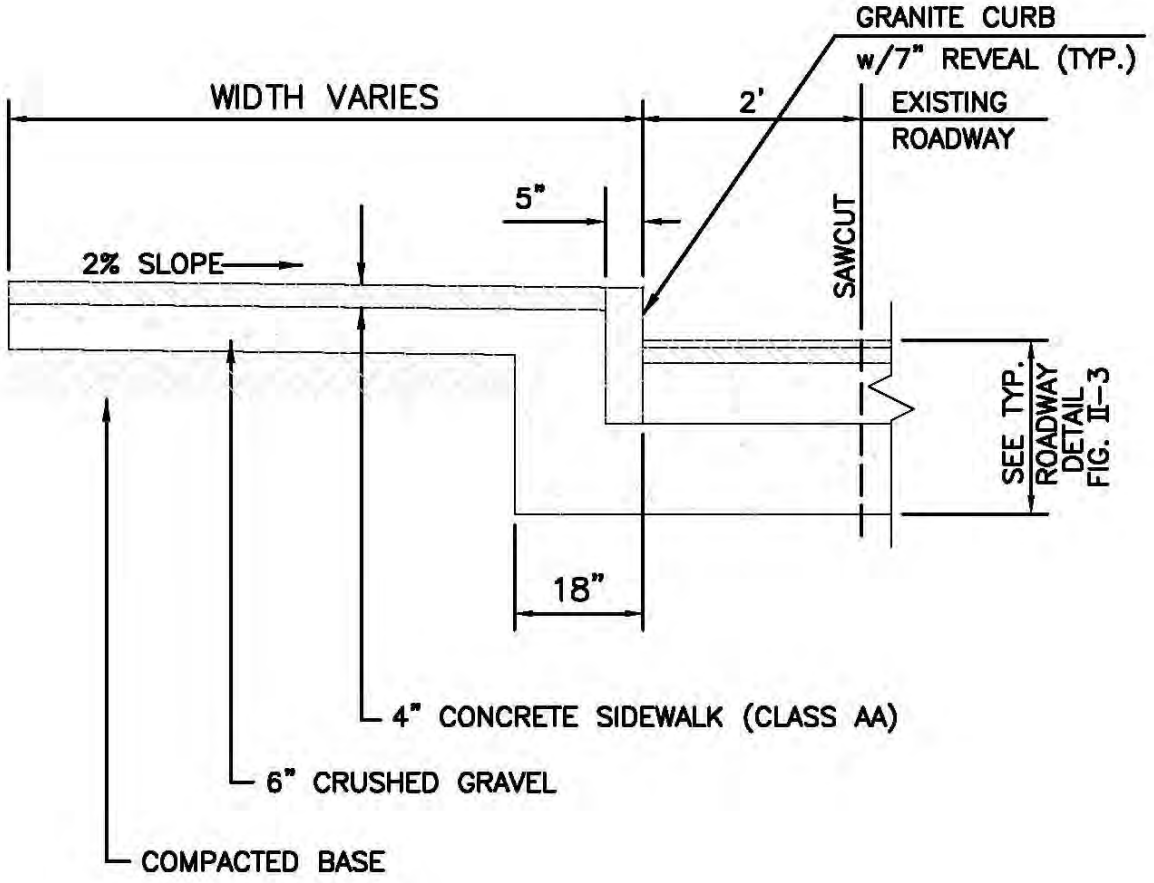

CONCRETE SIDEWALK DETAIL

S:\DWG\DETAILS\608-2 SWLK-CON.DWG

NOT TO SCALE
FIGURE 608-2

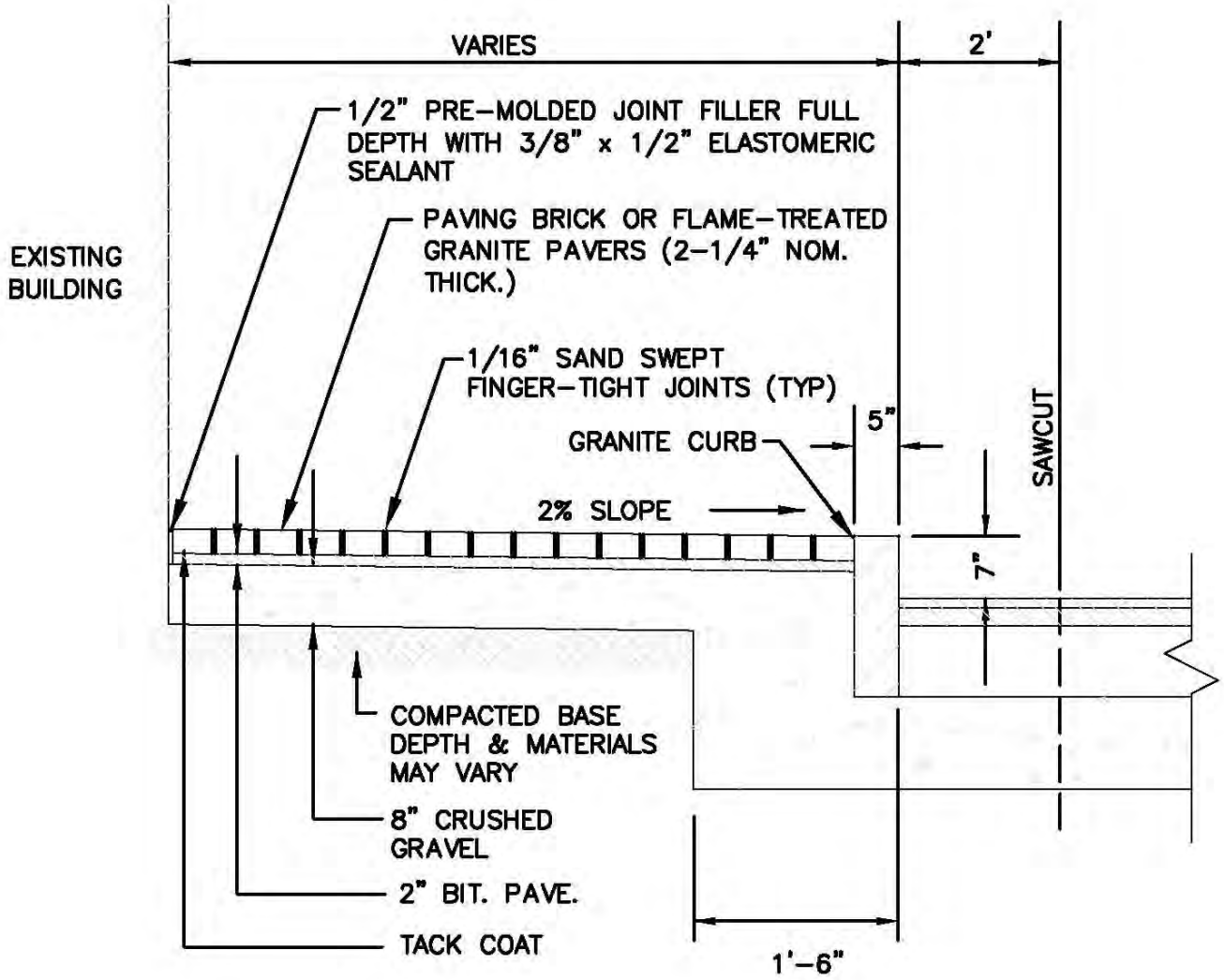

NOTE:
VIBRATE PAVERS INTO SCREEDED BITUMINOUS SETTING. MAINTAIN 1/16" JOINTS BETWEEN PAVERS AND SWEEP WITH SAND.

BRICK SIDEWALK

S:\DWG\DETAILS\608-3 SIDEWALK-BRICK.DWG

NOT TO SCALE

FIGURE 608-3

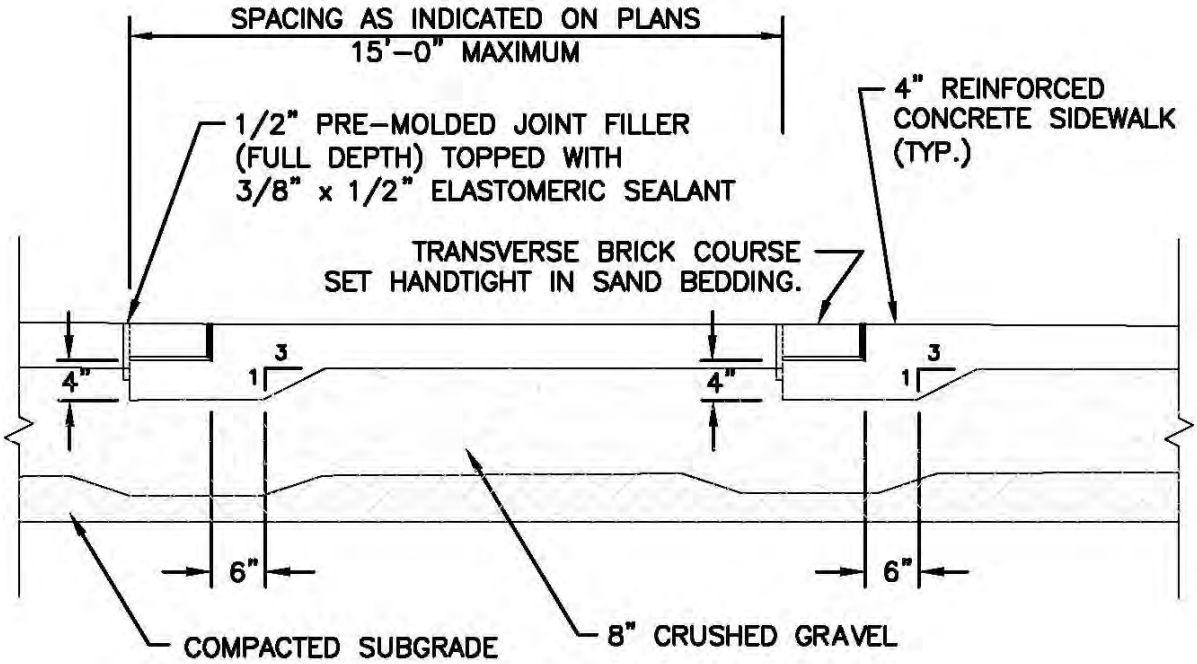

LONGITUDINAL SECTION

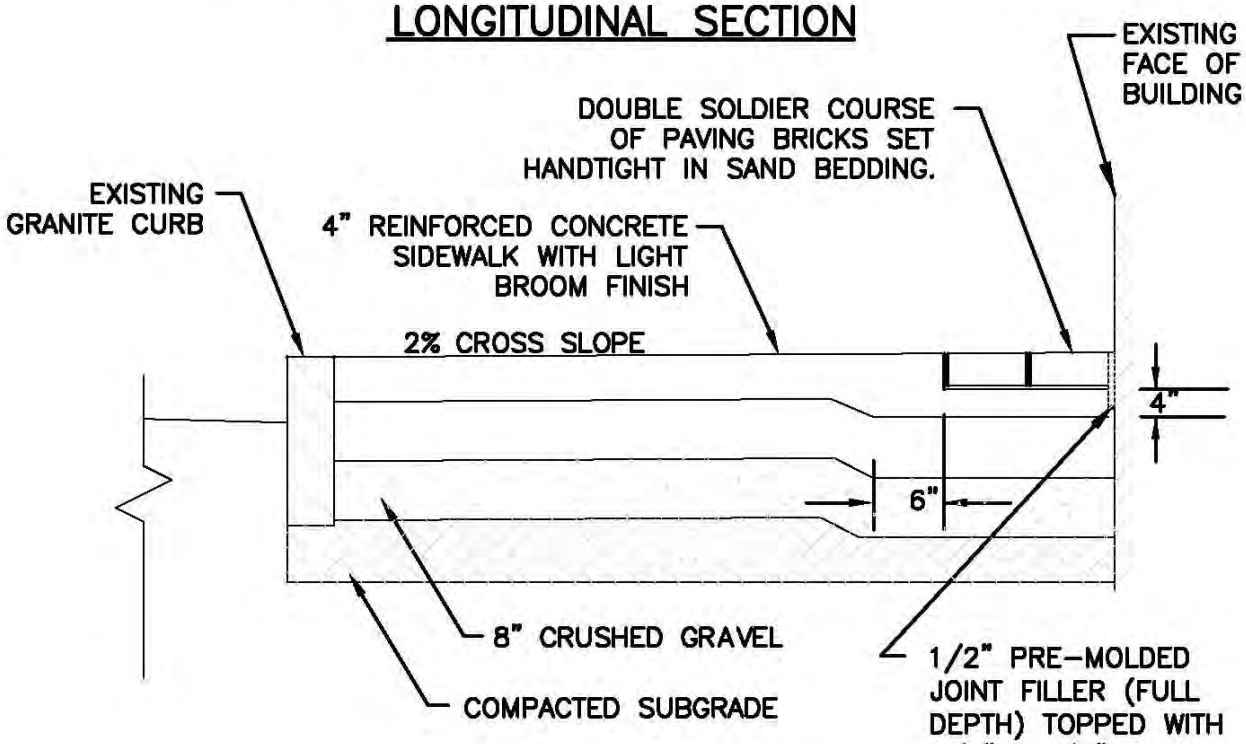

TRANSVERSE SECTION

CONCRETE SIDEWALKS (WITH BRICK ACCENTS)

S:\DWG\DETAILS\608-4 SWLK-CONC. W/BRICK ACCENT.DWG

NOT TO SCALE

FIG 608-4

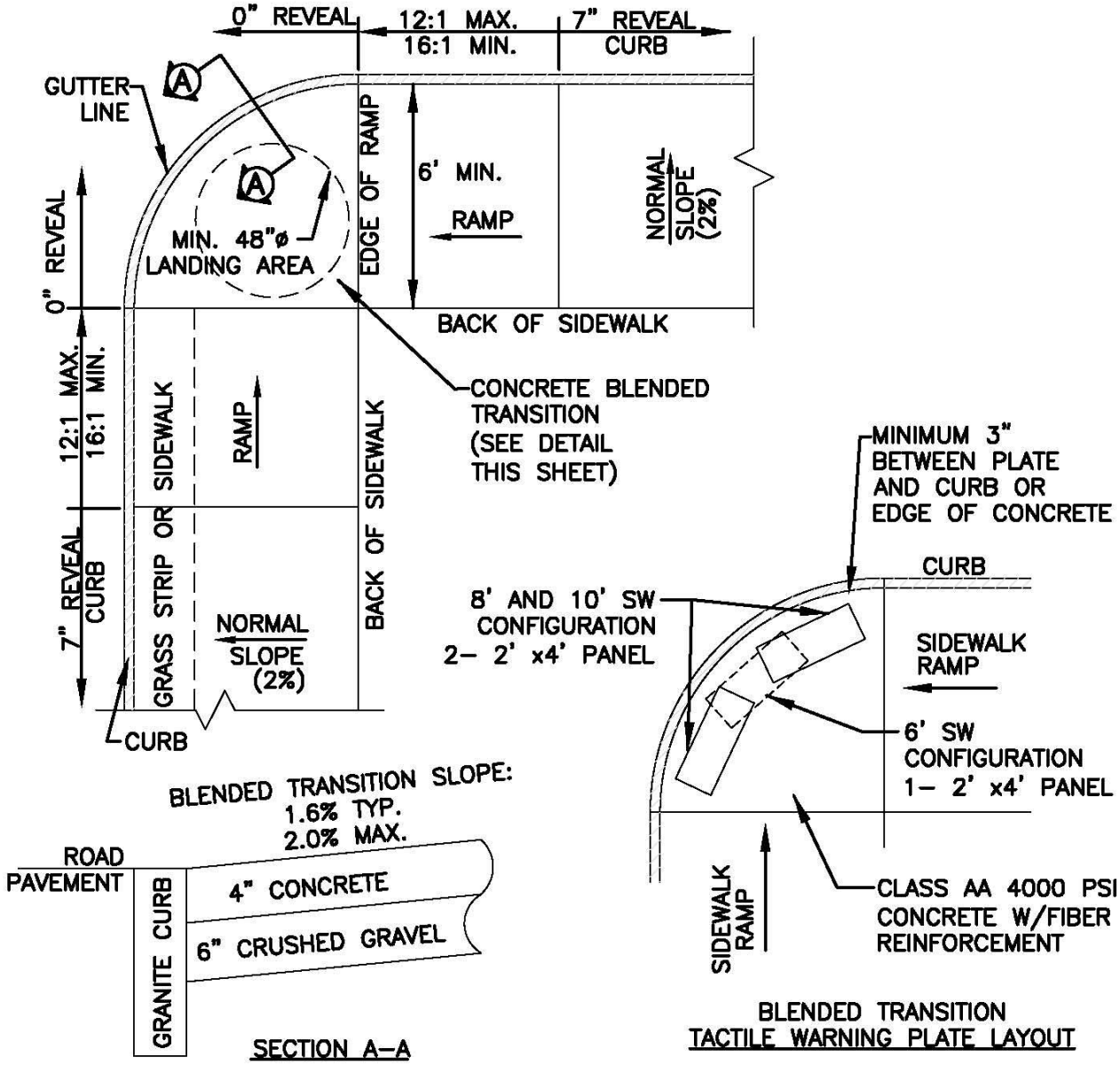

1. SLOPE OF RAMP VARIES WITH SIDEWALK WIDTH AND HEIGHT, WITH A MAXIMUM SLOPE OF 12:1 AND MINIMUM SLOPE OF 16:1.
2. A BROOM FINISH PARALLEL TO THE TACTILE WARNING PLATE SHALL BE USED ON PORTLAND CEMENT CONCRETE RAMPS.
3. INTERCEPT DRAINAGE ALONG THE CURB IN ADVANCE OF THE BLENDED TRANSITION.
4. MAINTAIN 0" OF CURB REVEAL AT THE BLENDED TRANSITION. (SEE SECTION A–A)
5. A MINIMUM OF 5 FEET CLEAR SHALL BE MAINTAINED AT ANY PERMANENT OBSTACLE IN ACCESSIBLE ROUTE (IE. HYDRANTS, UTILITY POLES, SIGNS, ETC.)
6. FOR PURPOSES OF THE TACTILE PLATE LAYOUT, THE WIDTH OF THE SIDEWALK (SW) SHALL BE CONSIDERED THE WIDTH INCLUDING THE GRASS PANEL.

CORNER SIDEWALK RAMP

S:\DWG\DETAILS\608–5 CORNER SW RAMP.DWG

NOT TO SCALE

FIG 608–5

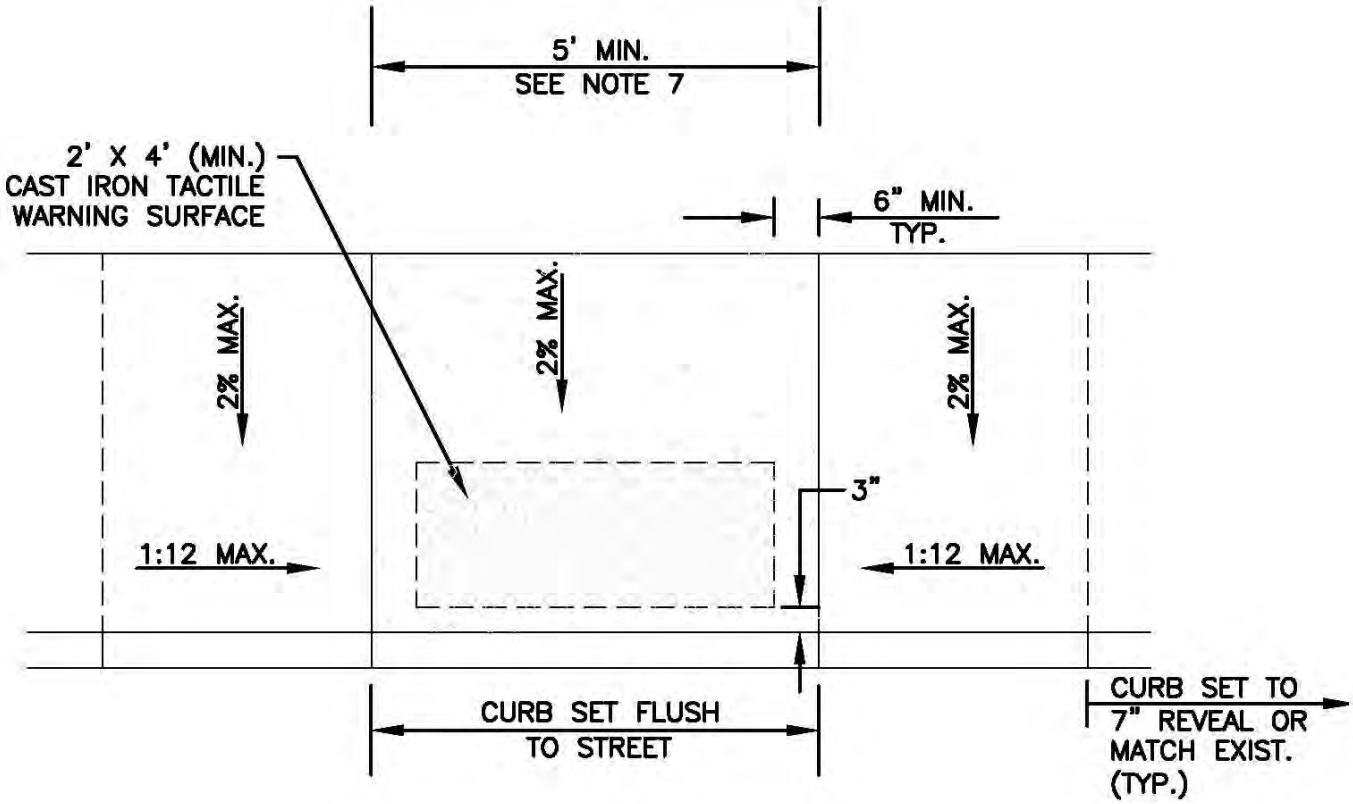

DETAIL PLACEMENT OF TACTILE SURFACE

1. SLOPE OF RAMP VARIES WITH SIDEWALK WIDTH AND HEIGHT, WITH A MAXIMUM SLOPE OF 12:1 AND MINIMUM SLOPE OF 16:1.
2. A BROOM FINISH TRANSVERSE TO THE SLOPE OF THE RAMP SHALL BE USED ON PORTLAND CEMENT CONCRETE RAMPS.
3. MAINTAIN THE NORMAL GUTTER PROFILE THROUGHOUT THE RAMP AREA.
4. INTERCEPT DRAINAGE ALONG THE CURB IN ADVANCE OF THE RAMP.
5. MAINTAIN 0" OF CURB REVEAL AT THE RAMP.
6. A MINIMUM OF 4 FEET CLEAR SHALL BE MAINTAINED AT ANY PERMANENT OBSTACLE IN ACCESSIBLE ROUTE (IE. HYDRANTS, UTILITY POLES, SIGNS, ETC.)
7. A WIDTH LESS THAN FIVE FEET MAY BE PERMISSIBLE AT THE CITY'S DISCRETION. DIMENSIONS THAT DO NOT COMPLY WITH ADA TITLE III REGULATIONS WILL NOT BE ALLOWED.
8. CROSS SLOPE WITHIN ACCESSIBLE ROUTE SHALL NOT EXCEED 2%

TYPICAL SIDEWALK RAMP PERPENDICULAR CROSSING

Q:\DWG\DETAILS\STREETS-SIDEWALKS\608-6 SWLK-RMP PERP.DWG

NOT TO SCALE
FIG. 608-6

SECTION 609 -- CURBS

Description

1.1 This work shall consist of constructing or resetting curbing as shown on the plans or as ordered.

Materials

2.1 General. Curb shall be constructed of new granite curbing, salvaged granite curbing, or bituminous concrete, as indicated in the proposal.

2.2 Granite shall be hard, durable, reasonably uniform in appearance, and free from weakening seams; solid quartz or feldspar veins will not be cause for rejection.

2.2.1 Surfaces of each stone shall be finished in accordance with the requirements of Table 609-1. All comparable curbs on the project shall have similar finishes.

2.2.2 When the slope curb item description does not indicate a specific height, the size of the stone shall be that as shown on the standard entitled "Granite Slope Curb". The setting reveal (the vertical height of the exposed face when set) shall be 4 inches or as shown on the plans.

2.3 Salvaged Granite Curbing shall, if necessary, be dressed to obtain joints of the same width as specified for new curb.

Table 609- 1 Finished Surface Tolerances for Granite Curb

AREA		FINISHED SURFACE	TOLERANCE, INCHES [a]	
STRAIGHT OR CURVED				
Top:		5 inches wide or as otherwise shown, sawn true plane.	+1/8	-1/8
		Front and back arris lines pitched straight and parallel.	+1/8	-1/8
	Front face	Right angle to top, approximately true plane. No drill holes showing in top 10 inches.	+1	-1/2
Back face:	Exposed	Plane parallel with front face. Straight split to 1-1/2 inches below exposed surface. No larger than 1/4 inch segment of drill holes showing in arris lines.	+1	-1
	Concealed	Below 1-1/2 inches from exposed surface.	+1-1/2	-1-1/2
Bottom:		Approximately parallel to top. Minimum width: 3 inches	See plans.	
Ends:	Exposed portion	Square with planes of top and face.		
Joints:	Exposed	Optimum width: 1 inch.	+3/4	-3/4
	Concealed	To break back no more than 4 inches.	+3/4	-3/4
Lengths of stones		3 feet to 10 feet with 50 percent of sections to be 5 feet or greater, or as indicated		
INLET				
		Opening shall be bush hammered or flame finished, to a reasonably smooth finish.		

AREA		FINISHED SURFACE	TOLERANCE, INCHES [a]	
BRIDGE				
Conform to Straight Curb except as specified below.				
	Exposed surfaces	No drill holes showing; none in back face arris lines.		
	Bottom	Width equal to width of top.	+1/2	-1/2
Joints:	Exposed	Maximum width: 1/2 inch	+1/4	
	Concealed	To break back no more than 1 inch.		
SLOPE AND END STONE				
	Arris lines	Straight and true on top, front and ends. Drill holes not deeper than ¼ inch allowed in arris lines.	+1/4	-1/4
Faces:	Exposed part	Planes; no drill holes in faces longer than 8 inches or deeper than 1/4 inch.	+1	-1
	Concealed part	Drill holes not objectionable.		
	Ends	Square with face except as indicated.		
	Joints	On tangent, maximum width: 1 inch. On curves over 15 foot radius, widen top or bottom from 1 inch as necessary. On curves with 15 foot radius and under, use radial joints or curved curb as indicated. Optimum width: 1 inch.	+1/2	-1/2
	Length of stones	Min. and max. specified lengths.	See plans.	

[a] + Projection in stone; -Depression in stone

2.4 Bituminous Concrete curb shall meet the requirements of Section 401 except that the composition of the mixture shall conform to the limits of Table 609- 2. The mixture shall extrude properly with a uniform, smooth appearance.

Table 609- 2 Required Grading for Bituminous Curbing Mix

Sieve Size	Percentage By Weight Passing
3/4 inch	100
1/2 inch	86.0 – 100
3/8 inch	75.0 – 100
No. 4	60.0– 80.0
No. 8	42.0 – 62.0
No. 16	30.0 – 49.0
No. 30	22.0 – 39.0
No. 50	14.0 – 27.0
No. 200	3.0 – 10.0
Asphalt Cement, percent of Mix:	7.0 - 9.0

2.4.1 Polyester fibers, as approved by the Engineer, shall be uniformly incorporated in the dry mix in the proportion of approximately 1/4 percent of the total batch weight.

2.4.1.1 PG 76-28 binder may be used in lieu of polyester fibers, provided that the mix conforms to the limits of Table 411-1 and the asphalt content is 7.0%.

2.4.2 Curb Paint Shall be Ready-Mixed White or Yellow Traffic Paint in conformance with Section 708.

2.4.3 Beads for reflectorization shall conform to Section 708

2.5 Cement Mortar shall conform to Section 707 except that cement mortar for bedding curb (bridge) shall be an approved mortar consisting of sand, cement, and additives necessary to produce a non-shrinking, non-ferrous grout when mixed with water at the rate recommended by the manufacturer. When the bedding is more that 3/4 inch in height, a 3/8 inch washed stone may be mixed into the mortar at the maximum of 1 part stone to 4 parts dry mortar.

2.6 Curb anchors shall be zinc-coated (galvanized) steel in accordance with ASTM A 653/A 653M, coating designation G 90 of shapes and dimensions as shown on the plans.

2.7 Backfill material shall conform to the appropriate material shown on the plans.

Construction Requirements

3.1 Granite Curb, New and Reset.

3.1.1 Excavation for curb shall be made to the required depth, and the base upon which the curb is to be set shall be compacted to a firm, even surface.

3.1.2 Installation of curbing shall be so that the front top arris line conforms to the line and grade required. All spaces under the curbing shall be filled with material conforming to the requirements for roadway base course. This material shall be thoroughly tamped.

3.1.3 Joints shall be of the width indicated in Table 609- 1. They shall be pointed with mortar and the exposed portions finished with a jointer.

3.1.4 Curbing to be salvaged and reset shall be carefully removed and stored. The Contractor shall replace any curbing damaged or lost because of his negligence. All exposed portions of reset curbing shall be cleaned by sand blasting.

3.1.5 Backfilling shall be accomplished immediately after the curb is set and jointed. Backfill shall be approved material, placed and thoroughly tamped.

3.1.6 Bridge curb shall be set on a mortar bed of non- shrink mortar. The front face shall be plumb and the top shall conform to the required line and grade. All joints shall be grouted and the exposed portions finished with a jointer. Long and short lengths of curb shall be laid alternately unless otherwise ordered.

3.1.6.1 Curb anchors shall be set and grouted as shown on the plans.

3.1.7 Granite curb inlets shall be set in full mortar beds and conform to the required line and grade.

3.2 Bituminous Concrete Curb.

3.2.1 When possible, bituminous curb shall be placed prior to the application of the wearing course of pavement. The wearing course of pavement shall then be paved up to the curb helping to “lock-in” the curb to minimize winter plow damage.

3.2.2 Prior to placing the curbing, the surface of the pavement shall be cleaned as directed and painted with a tack coat of bituminous material when ordered.

3.2.3 The curbing shall be placed by means of an approved extruding curb paver. The curbing shall be compacted to a minimum density of 90 percent of a laboratory compacted sample of the same mix. A tight bond shall be obtained between the prepared course and the curb and between the necessary curb joints.

3.2.4 Unless specified, curb shall be left unpainted. Curb shall be painted after a curing period which shall be as long as project conditions permit, but not less than 7 days, exposed surfaces of curbing shall be sprayed with 2 coats of curb paint. Primer and finish coats shall be applied at a rate to obtain a wet thickness of 16 mils each application. The finish coat is intended to serve as the vehicle for holding the beads for reflectorization.

3.2.5 The beads for reflectorization shall be applied by the drop-on method at the time of application of the second coat of paint, evenly and uniformly, at the rate to obtain the adhesion of the maximum number of beads possible. Dead spots, found upon testing after dark, when ordered, shall be repainted and additional beads applied.

Method of Measurement

4.1 Curb will be measured by the linear foot to the nearest 0.1 of a foot from end to end along the lower edge of the exposed face of the curbing. Only curbing actually cut to a radius will be considered as curved curb. Slope curb shown or ordered to be cut on radial joints, (not square with face) will be measured separately.

4.2 Granite curb inlets will be measured by the number of units installed.

4.3 Granite curb returns at driveways of the radius specified will be measured by the number of units installed.

Basis of Payment

5.1 The accepted quantities of curb will be paid for at the contract unit price per linear foot for each type of curbing specified complete in place, except that all special cutting ordered due to changes in the plans will be paid for as Extra Work.

5.2 The accepted quantities of granite curb inlets will be paid for at the contract unit price per each complete in place.

5.3 The accepted quantities of granite curb returns at driveways of the radius specified will be paid for at the contract unit price per each complete in place.

5.4 Roadway base course material adjacent to the curb will be paid for under the appropriate items and no deduction will be made for the volume occupied by the curb. In the process of setting the curb, excavation and backfill of the material that has been placed by the Contractor will be considered as incidental to the item.

Pay Items and Units, Section 609 -- Curbs:

609.01	Straight Granite Curb	L.F.
609.02	Curved Granite Curb	L.F.
609.21	Straight Granite Slope Curb	L.F.

609.22	Straight Granite Slope Curb with Radial Joints	L.F.
609.23	Curved Granite Slope Curb	L.F.
609.31	Straight Granite Curb (Bridge)	L.F.
609.32	Curved Granite Curb (Bridge)	L.F.
609.41	Granite Curb Inlets A	Each
609.42	Granite Curb Inlets B	Each
609.5	Reset Granite Curb	L.F.
609.51	Reset Granite Curb Furnished by Others	L.F.
609.81	Bituminous Concrete Curb, Type A	L.F.
609.82	Bituminous Concrete Curb, Type B	L.F.
609.83	Bituminous Concrete Curb, Type C	L.F.
609.9_	Granite Curb Returns, _ ft radius	EA

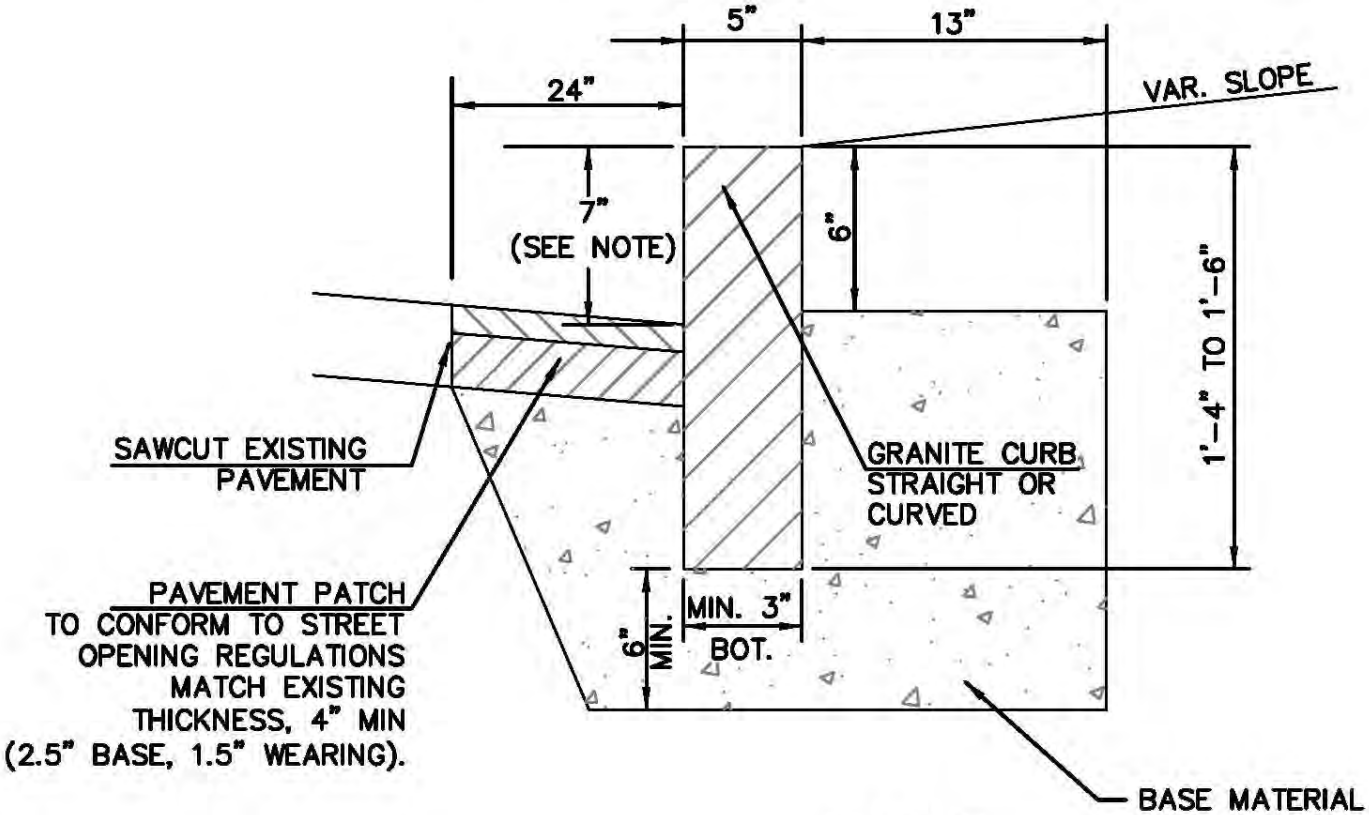

SECTION

RADIUS	MAX. LENGTH
21'	3'
22'-28'	4'
29'-35'	5'
36'-42'	6'
43'-49'	7'
50'-56'	8'
57'-60'	9'
OVER 60'	10'

NOTE:

MINIMUM LENGTH OF CURB STONES - 3'

MAXIMUM LENGTH OF CURB STONES - 10'

MAXIMUM LENGTH OF STRAIGHT CURB STONES LAID ON CURVES - SEE CHART.

ADJOINING STONES SHALL HAVE THE SAME OR APPROXIMATELY THE SAME LENGTH.

CURB ENDS TO BE TIPPED DOWN.

UNLESS SPECIFIED ON THE PLANS OR BY THE ENGINEER, CURB REVEAL SHALL BE 7 INCHES.

GRANITE CURB

S:\DWG\DETAILS\CURB\609-1 CURB-G.DWG

NOT TO SCALE

FIG. 609-1

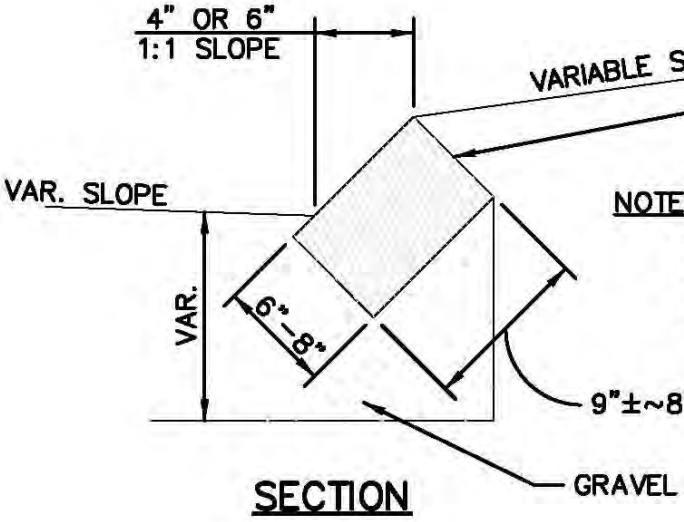

SECTION

NOTE:
ADJOINING STONES OF STRAIGHT CURB LAID ON CURVES SHALL HAVE THE SAME OR APPROXIMATELY THE SAME LENGTH.

MINIMUM LENGTH OF STRAIGHT CURB STONES – 18"

MAXIMUM LENGTH OF STRAIGHT CURB STONES – 8'

MAXIMUM LENGTH OF STRAIGHT CURB STONES LAID ON CURVES – SEE CHART

RADIUS FOR STONES WITH SQUARE JOINTS	MAX. LENGTH
16'–28'	1'–6"
29'–41'	2'
42'–55'	3'
56'–68'	4'
69'–82'	5'
83'–96'	6'
97'–110'	7'
OVER 110'	8'

FOR 1' OR 1.5' RADIUS = R

R' = 5~0" FOR 1' R

R' = 11~0" FOR 1.5' R

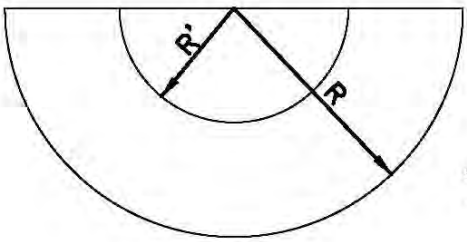

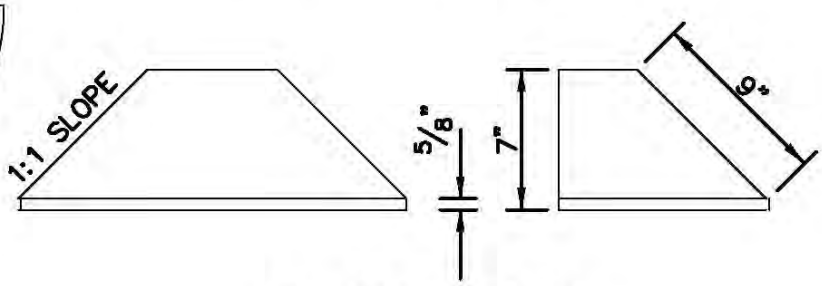

USE WITH SLOPE CURB

GRANITE SLOPE CURB DETAILS

S:\DWG\DETAILS\CURB\609-2 CURB-SLP.DWG

NOT TO SCALE

FIG. 609-2

L−1	RADIUS											
	2'	2.5'	3'	3.5'	4'	5'	6'	8'	10'	12'	14'	15'
	L−2											
9"	6.50"											
12"	8.75"	9.50"										
13"	9.50"	10.25"										
14"	10.25"	11.00"	11.50"									
15"	11.00"	11.75"	12.25"									
16"	11.75"	12.50"	13.25"	13.50"								
17"	12.50"	13.50"	14.00"	14.50"	14.75"	15.25"	15.50"	16.00"	16.00"	16.25"	16.25"	16.25"
18"	13.25"	14.25"	14.75"	15.25"	15.50"	16.00"	16.50"	16.75"	17.00"	17.25"	17.25"	17.25"
19"	14.00"	15.00"	15.75"	16.00"	16.50"	17.00"	17.25"	17.75"	18.00"	18.25"	18.25"	18.25"
20"	14.75"	15.75"	16.50"	17.00"	17.25"	18.00"	18.25"	18.75"	19.00"	19.00"	19.25	19.25"
							19.25"	19.50"	20.00"	20.00"	20.25"	20.25"
							20.00"	20.50"	20.75"	21.00"	21.25"	21.25"
							21.00"	21.50"	21.75"	22.00"	22.25"	22.25"
							22.00"	22.50"	22.75"	23.00"	23.00"	23.00"
											24.00"	24.00"
											25.00"	25.00"
											26.00"	26.00"
											27.00"	27.00"
											28.00"	28.00"
											28.75"	29.00"
											29.75"	29.75"
											30.75"	30.75"

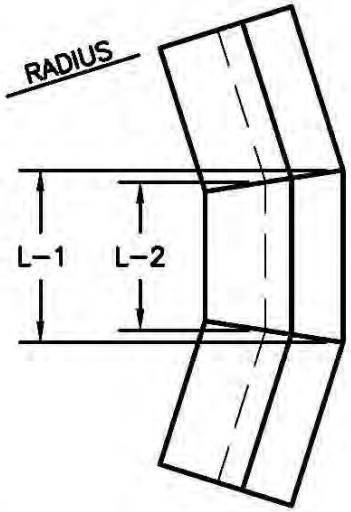

DETAIL FOR CUTTING STRAIGHT GRANITE SLOPE CURB WITH RADIAL JOINTS. (FOR USE WITH 2' TO 15' RADII)

CUTTING STRAIGHT GRANITE SLOPE CURB WITH RADIAL JOINTS

S:\DWG\DETAILS\CURB\609-3 RAD-JTS.DWG

NOT TO SCALE

FIG. 609-3

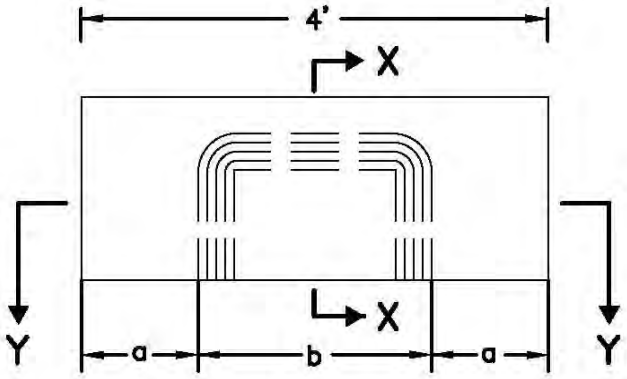

ELEVATION

TO BE USED WITH C.B.'S AND D.I.'S
AS CALLED FOR ON THE PLANS.

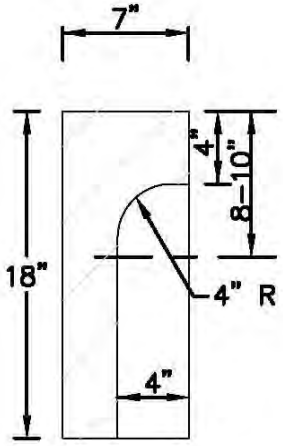

SECTION X-X

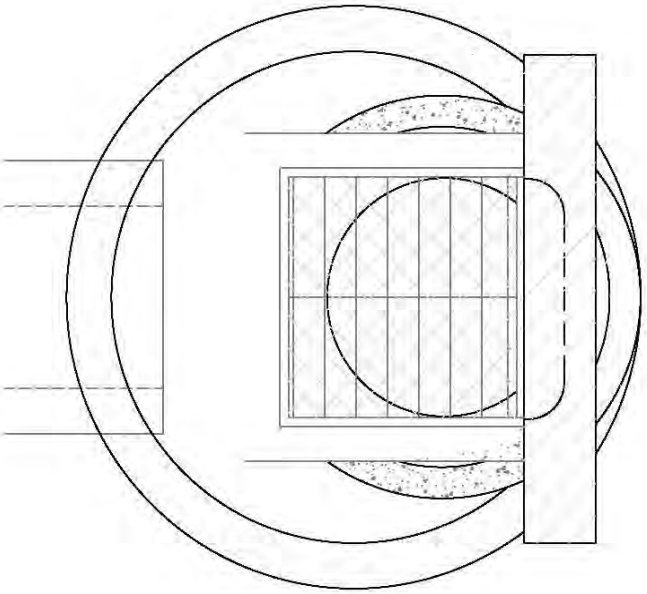

PLAN

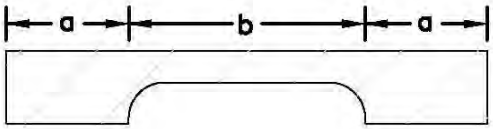

SECTION Y-Y

TYPE INLET	a	b
A	12"	24"
B	13.25"	21.5"

GRANITE CURB INLETS

S:\DWG\DETAILS\CURB\609-4 GC-INLET.DWG

NOT TO SCALE

FIG. 609-4

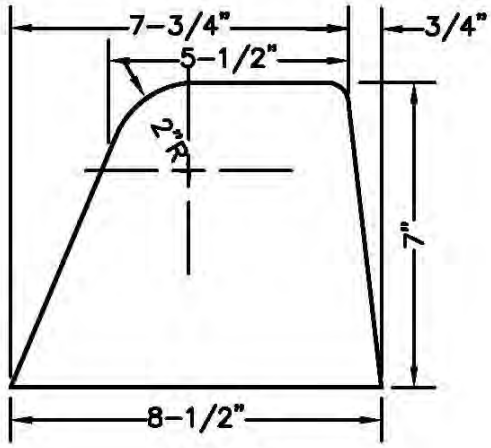

TYPE A

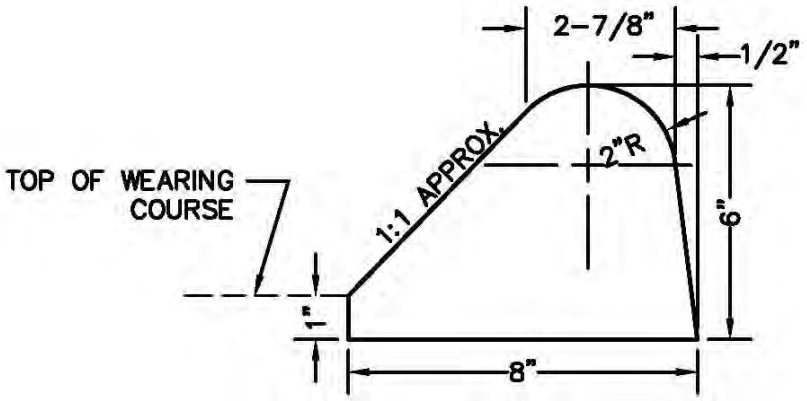

TYPE B

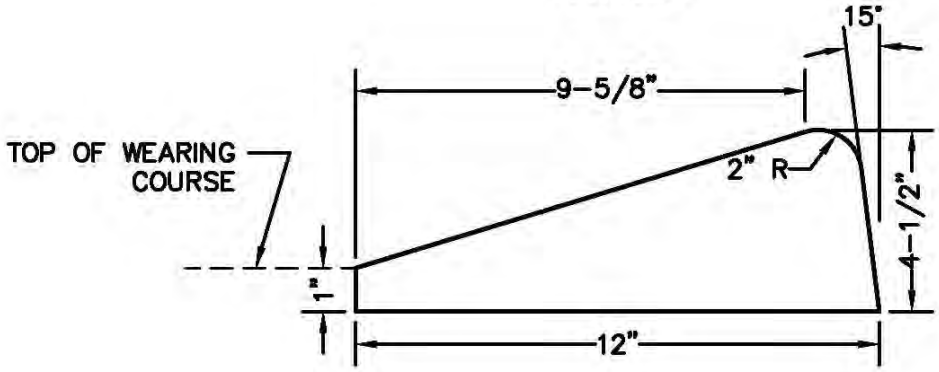

TYPE C
("CAPE COD BERM")

BITUMINOUS CONCRETE CURB

S:\DWG\DETAILS\609-5 BIT-CURB.DWG

NOT TO SCALE
FIG. 609-5

SECTION 610 -- DRIVEWAYS

Description

1.1 This work shall consist of constructing driveways of either bituminous concrete or portland cement concrete, reinforced when specified.

Materials

2.1 Base course materials shall conform to Section 304

2.2 Portland cement concrete shall be Class A conforming to Section 520.

2.2.1 Coarse aggregate shall be standard size #67.

2.2.2 Steel mesh shall be in accordance with the Concrete Reinforcing Steel Institute with a minimum spacing of 6x6- W2.9 x W2.9 or synthetic reinforcement fiber material that is on the Qualified Products list.

2.3 Pre-molded joint filler shall conform with ASTM D 1752 for preformed sponge rubber and cork expansion joint fillers for concrete paving and structural construction.

2.4 Elastomeric sealant shall be a self leveling, two component polyurethane product of a color which approximates the color of the surrounding concrete.

2.5 Bituminous concrete shall meet the material requirements of Section 401 .

Construction Requirements

3.1 Bituminous Driveways

3.1.1 Subgrade and Base Course. The subgrade shall be carefully graded and compacted. The base course material shall be spread and rolled to a smooth surface and to the required cross-section.

3.1.2 General. The plant, mixing methods and hauling shall conform to the provisions of Section 401 .

3.1.2.1 Binder Course. The compacted binder course shall be 1 inch less in thickness than the total thickness of the driveway.

3.1.2.2 Wearing Course. The compacted wearing course shall be 1 inch in thickness.

3.1.3 The bituminous concrete shall be spread uniformly in two courses as specified above. Each course shall be rolled with a roller weighing between 500 pounds and 2,000 pounds.

The finished surface shall be uniform in appearance, free from irregularities and shall present a smooth surface. The edges shall be trimmed as directed to secure uniform lines.

3.1.4 The sides of the driveway shall immediately be backfilled as necessary with suitable material compacted and finished flush with the top of the driveway.

3.2 Concrete Driveways.

3.2.1 Excavation shall be made to the required depth and to a width that will permit the installation and bracing of forms. The foundation shall be shaped and compacted to a firm, even surface conforming to the section shown on the plans or as ordered. All soft and yielding material shall be removed and replaced with acceptable material.

3.2.2 Forms shall be of wood or metal and shall extend for the full depth of the concrete. All forms shall be straight, free from warp and of sufficient strength to resist the pressure of the concrete without springing. Bracing and staking of forms shall be such that the forms remain in both horizontal and vertical alignment until their removal.

3.2.3 The foundation shall be thoroughly moistened immediately prior to the placing of the concrete. . Any standing water shall be removed before concrete is placed. The proportioning, mixing and placing of the concrete shall be in accordance with Section 520.

3.2.4 Steel mesh reinforcement when required, shall be placed at mid depth or as shown on the plans, using the methods described in Section 544.

3.2.5 The concrete driveways shall be placed in alternate slabs 30 feet in length except as otherwise ordered.

3.2.6 Finishing.

3.2.6.1 Concrete shall be finished by use of wood, carpet, canvas or cork floats by skilled concrete finishers leaving a fine-grained, non-skid texture.

3.2.7 Joints.

3.2.7.1 Transverse and longitudinal crack control joints shall be constructed by sawing, jointing tool or other approved method to a minimum depth of one third the slab thickness. If the jointing tool is not capable of constructing a joint to the correct depth, the joint shall be saw cut to the correct depth. Saw crack control joints as soon as concrete has hardened sufficiently to permit sawing without excessive raveling and before uncontrolled shrinkage cracking occurs, usually between four and twenty four hours Bond breaker shall be used at all construction joints.

3.2.7.2 Construction joints shall be formed around at any angles or intersections in the driveway, all appurtenances such as manholes and utility poles, extending into and

through the driveways and any fixed structure such as a building foundation. This expansion joint material shall extend for the full depth of the driveway.

3.2.8 Concrete shall be cured for a minimum of 7 days. Curing compounds will not be permitted. Plastic sheets or other approved materials shall be placed in close contact with the finished concrete as soon as the concrete has set sufficiently to avoid damage from the placement of coverings. The protective covering shall be maintained vapor-proof in close contact with the concrete for the entire 7 day period. All traffic shall be excluded during the curing period. Vehicular traffic shall be excluded for such additional time as ordered.

Method of Measurement

4.1 Concrete driveways will be measured by the square yard of finished surface, computed to the nearest 0.1 of a square yard.

4.2 Base course material will be measured by the cubic yard based on the product of the area of driveway approved for payment and the depth shown on the plans or ordered.

Basis of Payment

5.1 The accepted quantities of concrete driveways will be paid at the contract unit price per square yard of the type and depth specified complete in place.

5.2 Hot bituminous pavement for driveways will be paid for under Section 403.

5.3 Base course material will be paid for under Section 304.

5.4 Necessary excavation will paid for under Section 203 .

Pay Items and Units, Section 610 -- Driveways:

610.1	BituminousDriveway	SY
610.21	Concrete Driveway	SY
610.22	Reinforced Concrete Driveway	SY

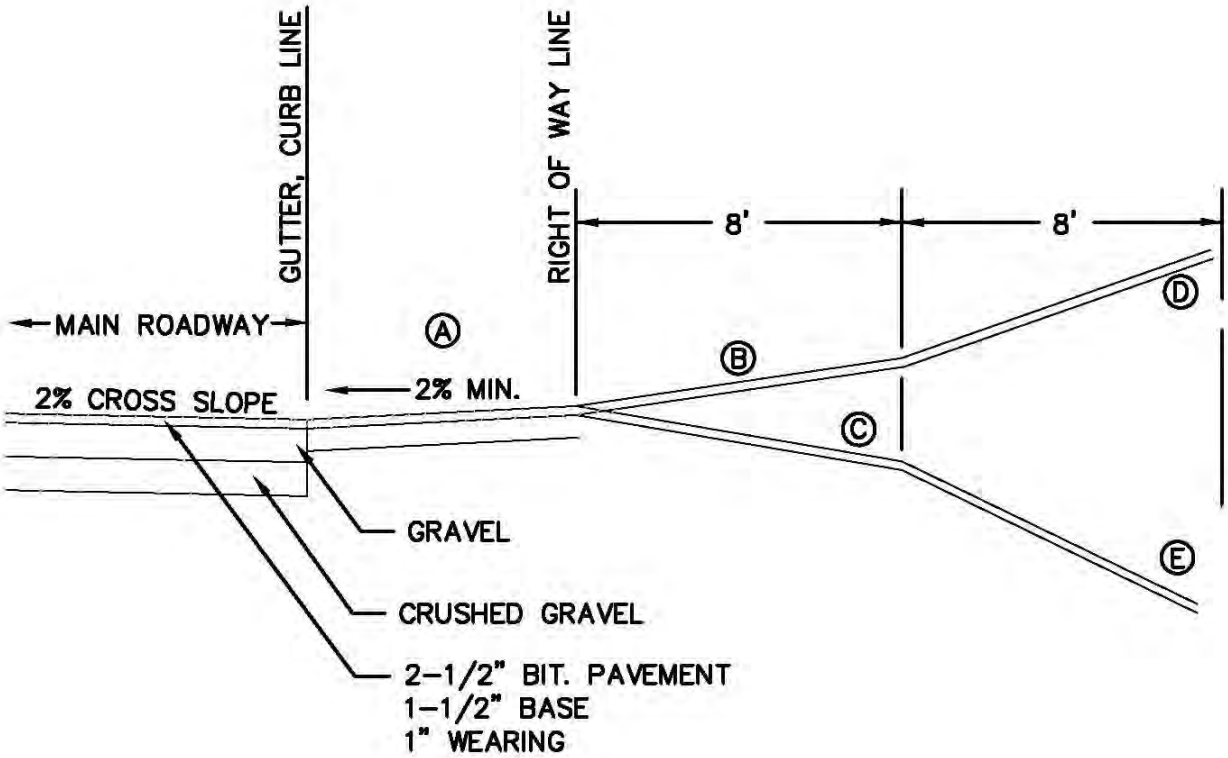

Ⓐ	Ⓑ	Ⓒ	Ⓓ	Ⓔ
+2% MIN.	+12% MAX.	−8% MAX.	+15% MAX.	
+3%	+13% MAX.	−7% MAX.		
+4%	+14% MAX.	−6% MAX.		
+5%	+15% MAX.	−5% MAX.		−15% MAX.
+6%		−4% MAX.		−14% MAX.
+7%		−3% MAX.		−13% MAX.
+8% MAX.		−2% MAX.		−12% MAX.

TYPICAL DRIVEWAY PROFILE

S:\DWG\DETAILS\STREET\610-1 DRVTYPPR.DWG

NOT TO SCALE

FIG. 610-1

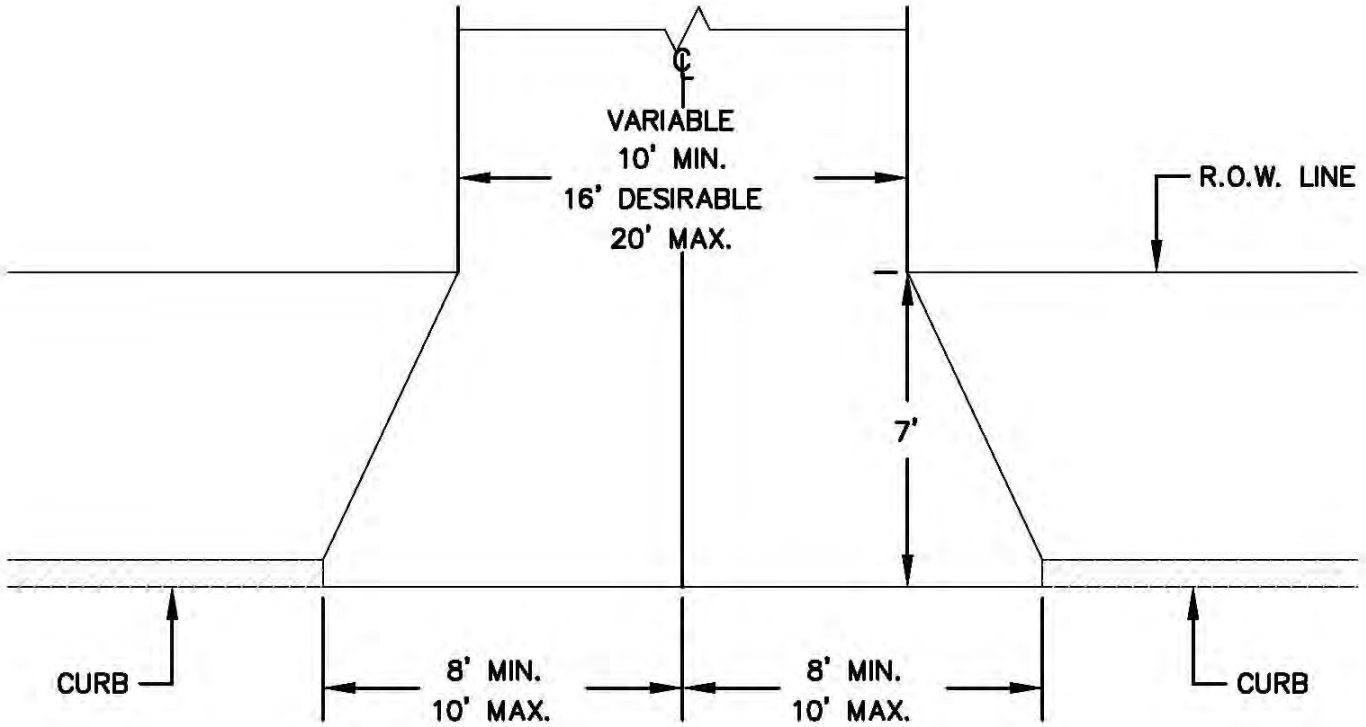

PLAN

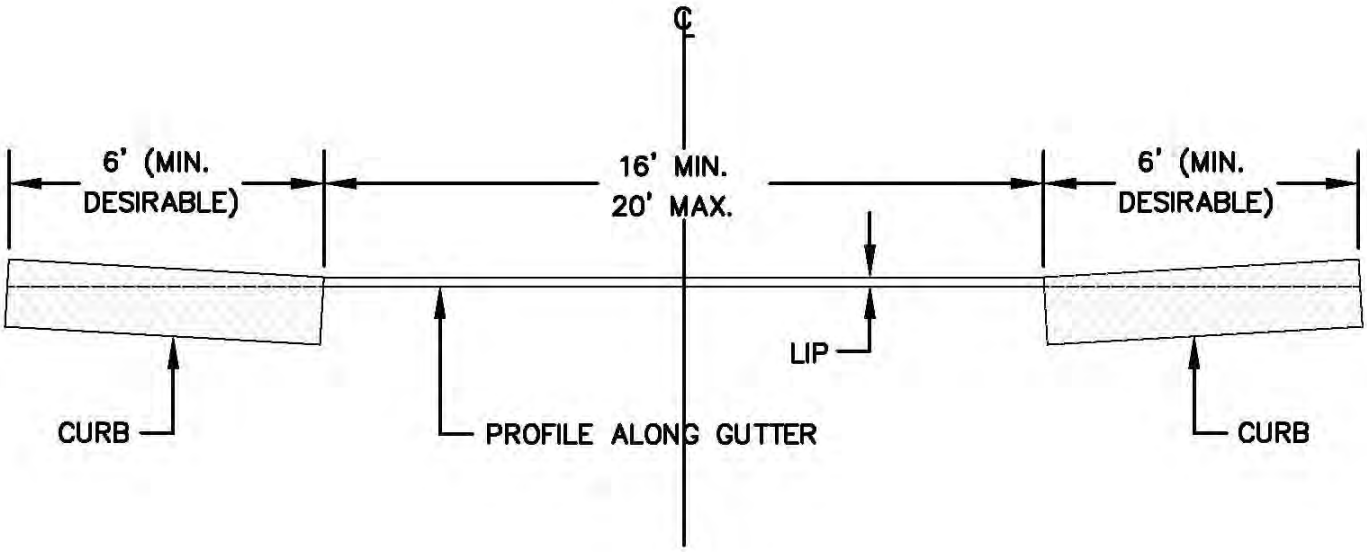

ELEVATION

RESIDENTIAL DRIVES

S:\DWG\DETAILS\STREET\610-2 RESDRIVE.DWG

NOT TO SCALE
FIG 610-2

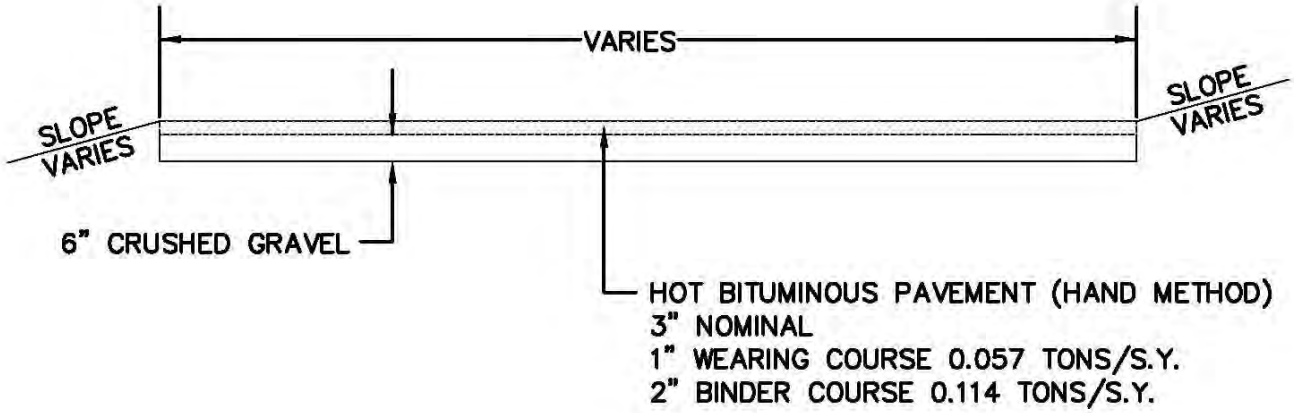

DETAIL–BITUMINOUS DRIVEWAY

S:\DWG\DETAILS\610–3,610–4 DRIVETYP.DWG

NOT TO SCALE
FIG. 610–3

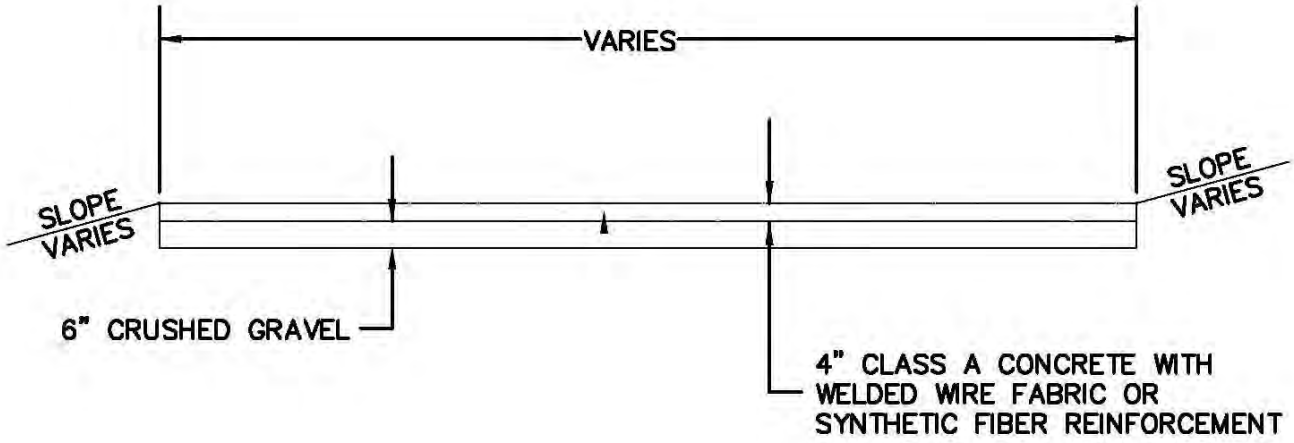

DETAIL–CONCRETE DRIVEWAY

S:\DWG\DETAILS\STREET\610–3,610–4 DRIVETYP.DWG

NOT TO SCALE
FIG. 610–4

SECTION 614 -- ELECTRICAL CONDUIT

Description

1.1 This work shall consist of furnishing, installing and testing conduit of the size and type specified, including sweeps, bends, joints, hangers, pull boxes, special fittings, plastic warning tape and other appurtenances, as shown on the plans or ordered. Common structure excavation to the depth specified in 206.4.1.1, bedding if required, and backfill shall be included in this work. This work shall include the disposal of discarded materials and the restoration of disturbed surfaces when not otherwise included under other items in the contract.

Materials

2.1 Steel conduit shall conform to ASTM A 53 Standard Weight and shall be galvanized unless otherwise specified.

2.2 Plastic Conduit

2.2.1 Electrical plastic tubing (EPT) and electrical plastic conduit (EPC) including fittings and joint requirements shall conform to NEMA TC 2 or NEMA TC7 and shall be made from polyvinylchloride, PVC (NEC352) or polyethylene, PE (NEC353). Conduit shall be marked in accordance with NEMA TC 2-6.1.

2.2.2 Only watertight fittings supplied or recommended by the manufacturer shall be used.

2.2.3 When the item description calls for Plastic Conduit (material is not specified) either PVC or polyethylene shall be furnished and shall meet the requirements of 2.2.1.

2.3 Concrete for cast in place conduit encasement shall conform to Section 520, Class B. Precast concrete encased conduit will not be permitted.

2.4 Plastic warning tape shall be American Public Works Association standard six (6") inch wide polyethylene color coded and marked in accordance with the utility industry standards for marking underground utility lines.

2.5 Concrete pull boxes, either precast or cast in place, shall be constructed using concrete conforming to Section 520, Class A. Frame and cover castings shall be gray iron conforming to AASHTO M 105. Unless otherwise specified, all gray iron castings shall be Class 30. Unless otherwise specified, all gray iron castings shall be Class 30. Covers shall be secured to the frame with two stainless steel hex head bolts conforming to ASTM A 240 Type 304. Pull boxes and covers shall be constructed as detailed on the plans.

2.6 Molded pull boxes shall be either fiberglass-filled high density polyethylene (HDPE), fiber reinforced polyester mortar, or fiberglass reinforced polymer concrete, all with high impact resistance and ultraviolet stabilization tested per ASTM G53 and chemical tested per ASTM 543 section 7. The box and cover shall be designed for off roadway applications subject to incidental,

non-deliberate heavy vehicular traffic in accordance with the Western Underground Committee Guide 3.6 for non-concrete enclosures (WUC Guide 3.6). Boxes and covers shall be tested with the cover in place.

2.6.1 The cover shall withstand a vertical test load of 20,800 lb applied at the center of the cover, by a 10" x 10" plate, with less than ½" deflection over 10 test cycles. The boxes shall withstand a vertical box wall test load of 20,800 lb applied by a 10” x 10” plate with a 5” x 10” area centered on the long wall with no more than ¼" deflection per foot of length of enclosure over 10 test cycles. Boxes shall also withstand a lateral sidewall test load of 1,200 lb per square foot applied by a plate 24” by the depth of the box, with no more than ¼" deflection per foot of length of enclosure over 10 test cycles. Tested in accordance with Section 4.1 of WUC Guide 3.6. Permanent deflection of any surface shall not exceed 10 percent of the maximum allowable static test load deflection.

2.6.2 Enclosures shall be designed and suitable for installation and use through a temperature range -40º F to 195º F

2.6.3 Covers, boxes and extensions shall meet the acceptance criteria in accordance with Section 5.3 of WUC Guide 3.6.

2.6.4 A spray or paint covering shall not be used to achieve the required nonflamability.

2.6.5 Boxes and extensions shall have adequate soil bearing surface to prevent settling in any soil, when tested in accordance with Section 4.1 of WUC Guide 3.6.

2.6.6 Covers and extensions shall be interchangeable with other boxes of the same material type and size manufactured to WUC Guide 3.6.

2.6.7 Any point on the covers shall withstand a 70 lb(f)-ft. impact administered with a 12 lb weight using a “C” TUP (ASTM D-2444) without puncturing or splitting. The test shall be performed with the cover resting upon a flat, rigid surface such as concrete or a 1" steel plate.

2.6.8 Cover surface shall provide a minimum coefficient of friction of 0.50. Covers shall be secured to box with two hex-head stainless steel bolts conforming to ASTM A 240 Type 304. Bolts shall be self-retaining and shall withstand a minimum of 70 lb(f)-ft. torque and have a minimum of 750 lbs straight pull out strength. Nuts shall be floating, replaceable and in a nut cavity which is free draining and shall provide a minimum of ½" movement from the center of the nut.

2.6.9 A Certificate of Compliance that the enclosure meets the above requirements when tested in accordance the Western Underground Committee Guide 3.6 testing procedures by a nationally recognized independent testing laboratory shall be provided.

Construction Requirements

3.1 General.

3.1.1 Installation within the limits of the traveled way and shoulders, whether paved or unpaved, shall be constructed with Schedule 80 PVC conduit (EPC), rigid steel conduit, concrete encased Schedule 40 PVC (EPC).

3.1.2 Installations beyond the limits of the traveled way and shoulders shall be constructed with Schedule 80 PVC conduit (EPC), rigid steel conduit or Schedule 40 PVC conduit (EPC), rigid steel conduit. These materials may also be used under sidewalks and parking lots subject to incidental heavy vehicular activity.

3.2 Bedding.

3.2.1 All conduit to be laid in the ground shall be placed on a prepared bedding which shall provide a firm foundation. Where rock or unstable soil is encountered, the bottom of the proposed bedding surface shall have a 6 inch layer of granular backfill-sand conforming to 209.2.1.4.1, compacted as directed.

3.3 Laying.

3.3.1 Conduit shall be laid to a pitch of not less than 3 inches per 100 feet.

3.3.2 All conduit lines located under pavement shall be installed in a straight line. Field bends required in other areas shall be made with an approved conduit bender. Not more than four 90 degree bends or equivalent (360 degree total) shall be used on a continuous conduit line. Bending radius shall not be less than 30 feet unless otherwise directed. Bends in conduit entering pull boxes, light pole bases, signal and meter pedestal bases, transformer pads, signal controller bases and at riser shall be made with manufactured electrical standard elbows.

3.3.3 All conduit connections shall be waterproof and conform to NEMA TC 2-3.4. When conduit of one material is to be joined to an existing conduit of another material, weatherproof adapters manufactured for the purpose shall be used. Waterproofing and sealing compounds containing bituminous material shall not be used.

3.3.4 When conduits are encased in concrete, concrete cover around ducts shall be a minimum of 3 inches with a minimum separation of 1-1/2 inches between ducts unless otherwise specified or ordered. After the initial set, the concrete shall be protected from the air and sun. Fill shall not be placed over the conduit until authorized by the Engineer.

3.3.5 Conduit risers installed on poles or other structures shall extend a minimum of 10 feet above the elbow and be of a type and total height to meet utility company requirements. Conduits shall be attached with an approved support strap. A suitable plug shall be installed in the end of the conduit riser.

3.3.6 When ordered, conduit shall be placed under existing pavement by approved jacking or drilling methods which do not disturb the pavement. Pavement shall not be disturbed without the written permission of the Engineer. Jacking and drilling pits shall be kept 2 feet clear of the edge of pavement.

3.3.7 When so directed, and whenever a continuous traffic signal conduit line is greater than 90 feet, additional pull boxes shall be installed. Cable splices shall not be made in these boxes without permission.

3.3.8 A minimum of 3 feet of space shall be left between the ends of conduit runs where there may be a future junction. When conduit is installed which does not terminate in a pull box, equipment base or similar type foundation, a witness marker consisting of a No. 5 re-bar of sufficient length to allow for the top of the marker to be set flush with the final grade shall be placed vertically at each end of such buried conduit.

3.3.9 Unless otherwise directed, a No. 14 galvanized steel pull wire or plastic/nylon rope having a minimum tensile strength of 200 lbs., shall be placed in all conduit runs. At least 24 inches of wire or rope shall be left coiled at each end of the conduit.

3.3.10 Brackets or spacers/separators for hanging and/or bundling ducts shall be as shown in the plans or approved by the Engineer.

3.3.11 Various Size Duct Conduit. The configuration of the multiple sized conduits shall be in accordance with the details shown in the plans.

3.4 Backfilling.

3.4.1 All backfill material adjacent to conduit shall be approved material. Backfill material shall be free from hard lumps or clods larger than 3 inches in diameter and free from rocks and stumps. Backfill within the pavement structure shall be of the same type material and match the depths encountered.

3.4.2 When conduit is installed beyond traveled ways and shoulders, and outside of areas such as sidewalks and parking lots, the backfill shall be placed to 6 inches above the conduit and compacted by pneumatic tampers, vibratory compactors, or other approved means. The remainder of the backfill material shall then be placed and compacted by an approved method.

3.4.3 When conduit is installed within traveled ways, shoulders, sidewalks and parking areas, the backfill shall be placed to 6 inches above the conduit or encasement and compacted by pneumatic tampers, vibratory compactors, or other approved means. Additional backfill shall be placed in layers not greater than 6 inches. All backfill shall be compacted to not less than 95 percent of maximum density as determined by AASHTO T 99.

3.4.4 Bituminous or Portland Cement concrete pavement removed to excavate the trench shall be replaced with hot bituminous pavement conforming to the requirements of Section 401 unless otherwise directed. Pavement shall be placed in thoroughly compacted layers of not more than 2 inches to give a total thickness equal to that of the existing pavement. All backfill shall be compacted to not less than 95 percent of maximum density as determined by AASHTO T 99.

3.4.5 Conduits provided for future use shall have suitable plugs installed at each end. Conduit ends shall not be backfilled until reference measurements are made by the Engineer.

3.4.6 A plastic warning tape shall be installed over all conduits at approximately 12 inches below final grade.

3.5 Testing.

3.5.1 After the trench has been backfilled, excluding pavement if applicable, the Contractor, in the presence of the Engineer shall test the installation by pushing through the entire length of the conduit line a device with a diameter not smaller than 1/4 of an inch less than the inside diameter of the conduit. All obstructions, including stones, dirt and the like, shall be removed. Broken or other unsatisfactory conduits shall be replaced at no expense to the Department.

3.5.2 When ordered, existing conduit to be incorporated into a new system shall be cleaned with a mandrel and blown out with compressed air.

3.6 Pull Boxes.

3.6.1 Concrete or molded pull boxes shall be constructed and installed as shown on the plans.

3.6.2 All pull boxes shall be placed on a minimum of 6 in. of granular backfill-sand conforming to 209.2.1.4.1 extending at least 4 in. beyond the outside of the pull box compacted to not less than 95 percent of maximun density as determined by AASHTO T 99. With the cover installed, soil shall be backfilled and compacted around the box. At final installation the box and cover shall be flush with finished grade.

3.6.3 Pull box covers shall have a recessed logo or lettering indicating the type of service enclosed.

3.6.4 An approved 2 inch galvanized "J" hook shall be installed as directed in pull boxes designated to be used for traffic signal circuits.

Method of Measurement

4.1 Conduit will be measured by the linear foot of the specified type, size and number of ducts of the size required, to the nearest 0.1 of a foot. Multiduct conduit will be measured as a single run down the centerline of the conduit bundle.

4.1.1 When a conduit is connected to a foundation for a signal pole, control cabinet pole or light pole, measurement will be made only to 3 feet from the center of the base, measured horizontally. The limit of measurement where conduit is joined to previously existing conduit will be at the junction of the two conduits.

4.2 Pull boxes will be measured by each, but will not be deducted from the length of the conduit.

Basis of Payment

5.1 The accepted quantities of conduit will be paid for at the contract unit price per linear foot of the type, size and number of ducts specified complete in place including brackets/spacers, common structure excavation to the depth specified in 206.4.1.1, bedding if required and backfill, with the following exceptions:

5.1.1 All rock structure excavation, and any excavation of unsuitable material required below the conduit will be paid for under Section 206 .

5.1.2 New material ordered for use as backfill below the subgrade will be paid for under Section 209.

5.1.3 Hot bituminous pavement required in 3.4.4 will be paid under Section 403. If the item of Section 403 is not included in the contract, this work will be paid as provided in 108.04.

5.2 Pull boxes of the type specified will be paid for at the contract unit price per each.

5.2.1 No extra payment will be made for material specified in 3.6.2.

Pay Items and Units, Section 614 -- Electrical Conduit:

614. A B C D E L.F.

A Conduit Type
1 Concrete Encased
2 Open
3 Steel Conduit
8 Relaying Conduit

B Size (round up to nearest whole number)
9 9 inch and over duct
0 Various sizes in multiduct

C Number of Ducts

614. 5 Pull Boxes Each
B Box
1 Concrete
1 14 inch
2 18 inch
2 Molded
1 13 by 24 inch
2 17 by 30 inch

614 7 Plastic Conduit L.F.

B Size (round up to nearest whole number)
C Number of Ducts (10 and over use 0)

D Plastic Conduit Material
1 PVC
2 Polyethylene

E Schedule
4 Schedule 40
8 Schedule 80

614.121	2" Conduit, Concrete Encased	L.F.
614.131	3" Conduit, Concrete Encased	L.F.
614.132	3" 2-Duct Conduit, Concrete Encased	L.F.
614.133	3" 3-Duct Conduit, Concrete Encased	L.F.
614.141	4" Conduit, Concrete Encased	L.F.
614.142	4" 2-Duct Conduit, Concrete Encased	L.F.

614.321	1-1/4" Steel Conduit	L.F.
614.331	3" Steel Conduit	L.F.
614.341	4" Steel Conduit	L.F.
614.511	Concrete Pull Box -- 14"	Each
614.512	Concrete Pull Box -- 18"	Each
614.522	Molded Pull Box – 13" x 24"	Each
614.523	Molded Pull Box – 17" x 30"	Each
614.7214	2" PVC Plastic Conduit, Schedule 40	L.F.
614.7218	2" PVC Plastic Conduit, Schedule 80	L.F.
614.7224	2" 2-Duct PVC Plastic Conduit, Schedule 40	L.F.
614.7228	2" 2-Duct PVC Plastic Conduit, Schedule 80	L.F.
614.7314	3" PVC Plastic Conduit, Schedule 40	L.F.
614.7318	3" PVC Plastic Conduit, Schedule 80	L.F.
614.7324	3" 2-Duct PVC Plastic Conduit, Schedule 40	L.F.
614.7328	3" 2-Duct PVC Plastic Conduit, Schedule 80	L.F.
614.7414	4" PVC Plastic Conduit, Schedule 40	L.F.
614.7418	4" PVC Plastic Conduit, Schedule 80	L.F.
614.7514	5" PVC Plastic Conduit, Schedule 40	L.F.
614.7518	5" PVC Plastic Conduit, schedule 80	L.F.

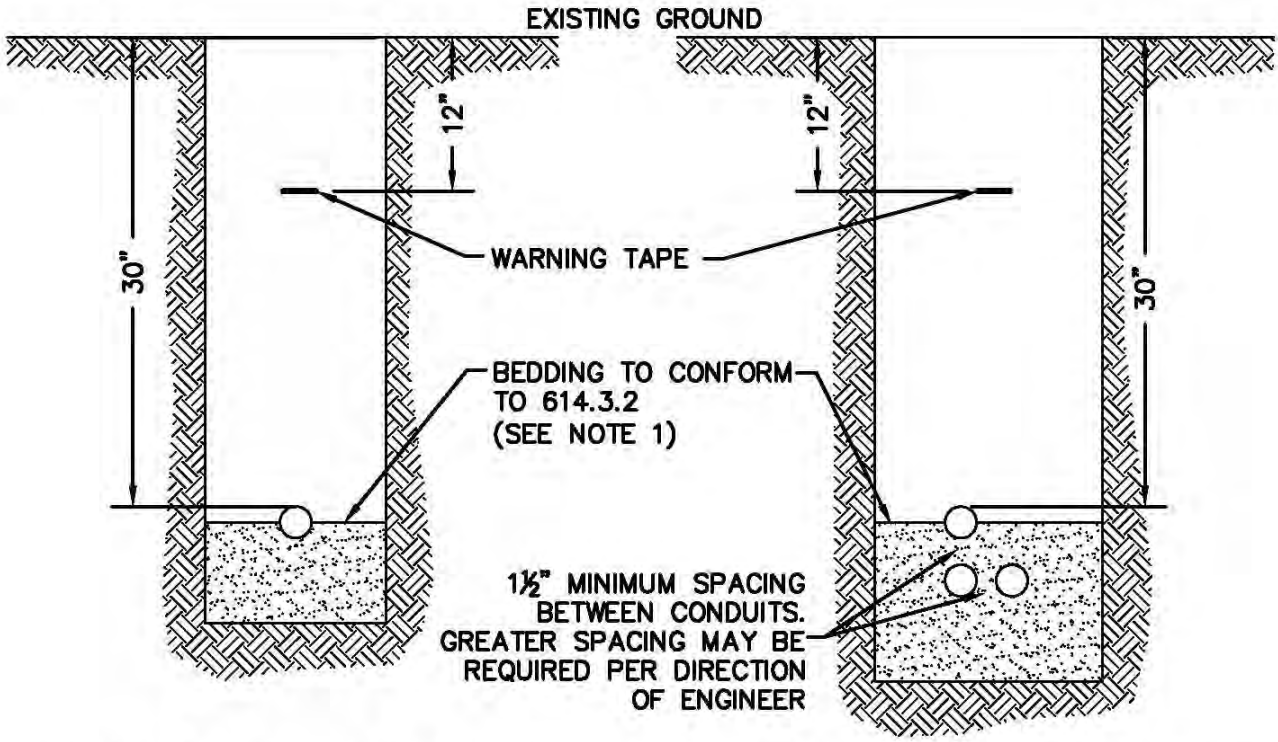

SINGLE CONDUIT LAYOUT

MULTI CONDUIT LAYOUT

NOTES

1. WHERE ROCK OR UNSUITABLE MATERIAL IS ENCOUNTERED IN THE TRENCH, CONDUIT SHALL BE PLACED ON A 6" BEDDING CONFORMING TO 614.3.2.
2. BACKFILL ABOVE CONDUIT SHALL BE IN ACCORDANCE WITH 614.
3. APPROVED SPACERS SHALL BE USED TO MAINTAIN REQUIRED DISTANCES BETWEEN CONDUITS.
4. MULTIPLE CONDUITS IN THE SAME TRENCH MAY BE ARRANGED VERTICALLY OR HORIZONTALLY PROVIDED ALL CLEARANCES ARE MAINTAINED.

CONDUIT INSTALLATION DETAILS

S:\DWG\DETAILS\614-1 CONDUIT.DWG

NOT TO SCALE

FIG. 614-1

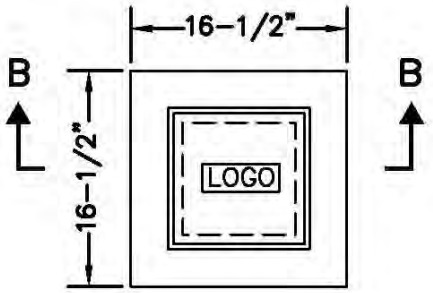

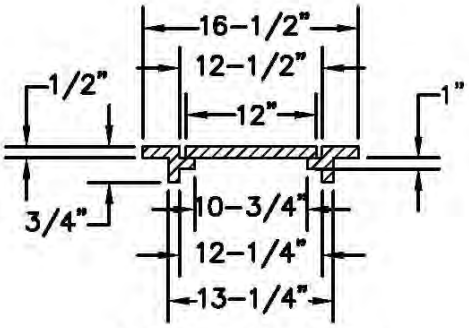

SECTION B-B

CAST IRON FRAME & COVER

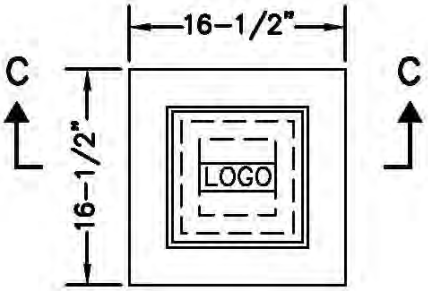

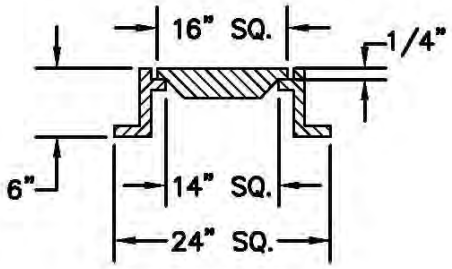

SECTION C-C

HEAVY DUTY CAST IRON FRAME & COVER

(APPROX. WEIGHT = 250 LB.)

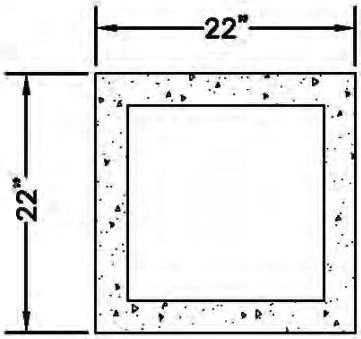

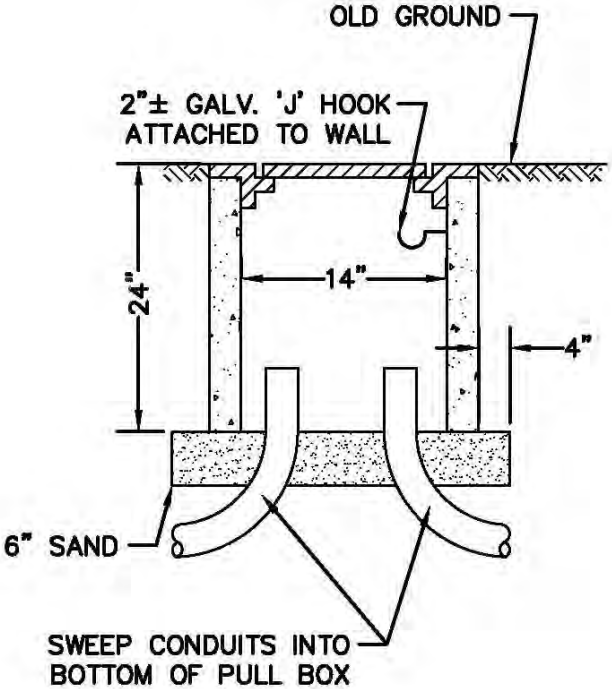

NOTES:

1. HEAVY DUTY REQUIRES 5" WALL THICKNESS.
2. CONCRETE SHALL BE CLASS 'A'.
3. 6" SAND BED FOR DRAINAGE, TAMPED.
4. GROUNDING BUSHING SHALL BE INSTALLED AT ALL ENDS OF STEEL CONDUIT.
5. LOGO = SIGNAL, DRAIN OR ELEC AS REQUIRED, ON CENTER OF COVER.

PULL BOX, FRAME & COVER

S:\DWG\DETAILS\614-2 TRFCCF.DWG

NOT TO SCALE

FIG. 614-2

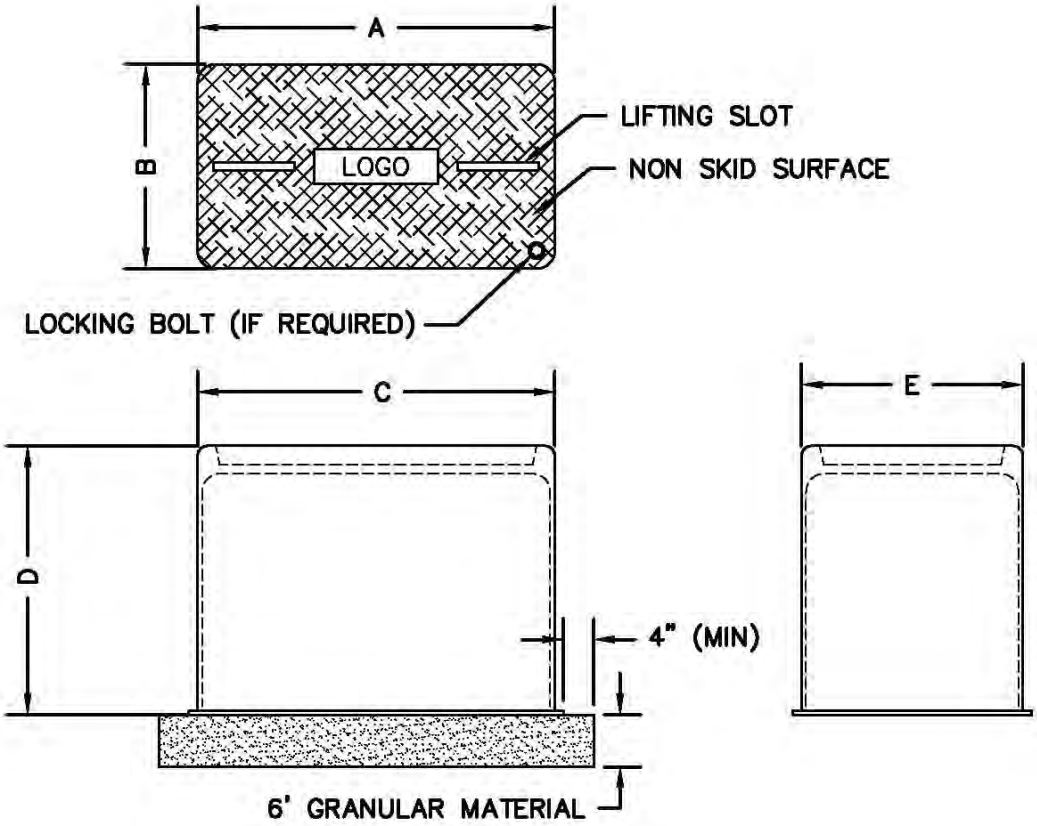

	A	B	C	D	E
ITEM NO. 614.522	24"	13"	26"	15"	16"–18"
ITEM NO. 614.523	30"	17"	32"	19"	18"

NOTES

1. PULL BOX SHALL HAVE AN OPEN BOTTOM
2. LOGO= SIGNAL DRAIN OR ELECTRIC AS REQUIRED.

MOLDED PULL BOXES

S:\DWG\DETAILS\614-3 MOLDED PB.DWG

NOT TO SCALE
FIG. 614–3

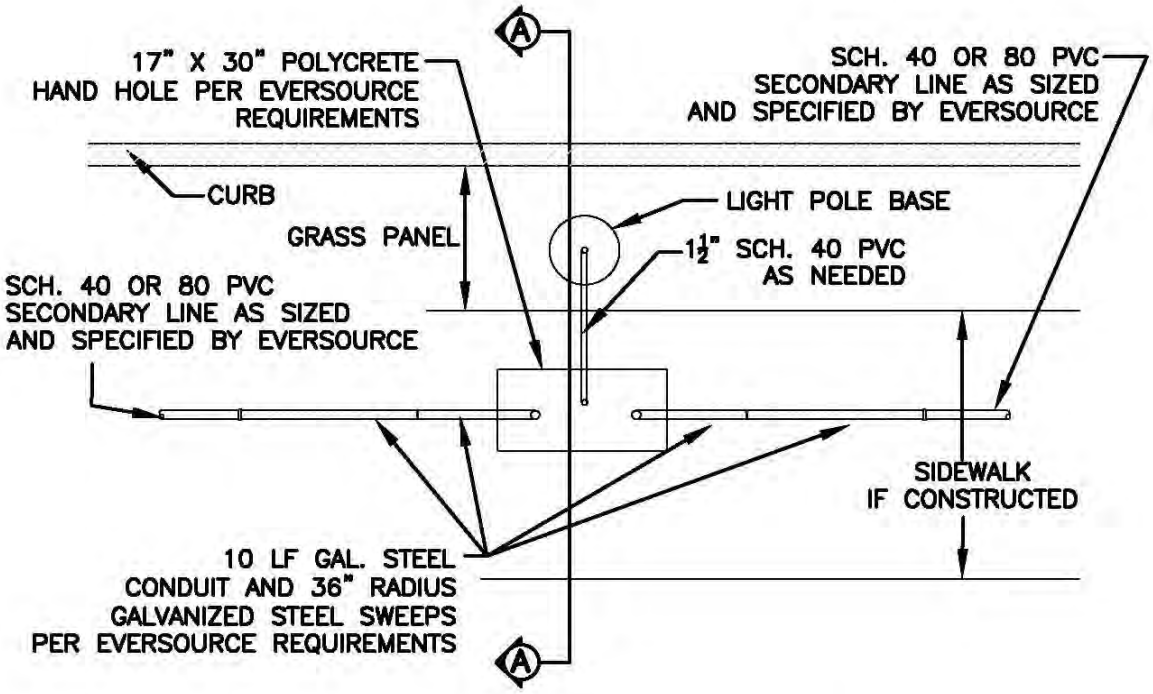

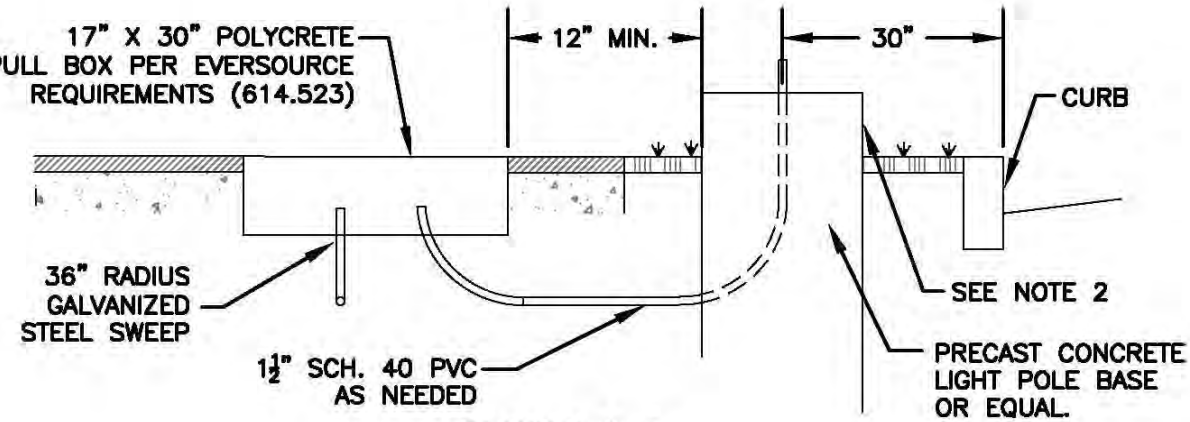

SECTION A–A

1. ALL WIRING, CONDUIT TYPE AND SIZE TO COMPLY WITH EVERSOURCE CONSTRUCTION REGULATIONS.
2. LIGHT POLE BASE REVEAL TO BE A MINIMUM OF 1 INCH BUT NO MORE THAN 3 INCHES.
3. LIGHT POLE BASE TO BE SIZED AS REQUIRED BY POLE MANUFACTURER.
4. PULL BOX MAY BE OMITTED IF CONNECTION OF 1½" CONDUIT FROM SECTOR CABINET IS ALLOWED BY EVERSOURCE. DISTANCES GREATER THAN 50 FEET IN LENGTH MAY REQUIRE A HAND HOLE AS DETERMINED BY DPW.

PULL BOX/LIGHT BASE DETAIL

Q:\DWG\DETAILS\TRAFFIC\614-4 ST LIGHT.DWG

NOT TO SCALE

FIG. 614–4

SECTION 615 – TRAFFIC SIGNS

Description

1.1 This work shall consist of furnishing, erecting, relocating or removing traffic signs and sign supports as shown on the plans or as ordered.

Materials

2.1 All parts used in constructing signs shall be designed to withstand a wind loading of 35 pounds per square foot on the sign surface, unless otherwise noted on the plans.

2.2 Signs shall be made from a single piece of 0.080 inch thick flat sheet aluminum.

2.3 Retroreflective sheeting shall be a minimum of high intensity type as manufactured by 3M, or approved equal. Visual inspections to assure that sheeting meets the specified requirements may be made by the Engineer at any time prior to acceptance

2.4 Steel "U" posts shall be rail steel conforming to the requirements of ASTM A 499, Grade 60, minimum yield strength of 60,000 psi. Posts shall be galvanized in accordance with AASHTO M 111. The weight per foot shall be a minimum of 2-1/2 pound and a maximum of 3 pounds. The posts shall have 3/8 inch holes drilled or punched, before painting, along the center line of the web. The holes shall begin 1 inch from the top of post and continue at 1 inch centers for the entire length of the post.

2.5 All mounting hardware shall be stainless steel.

2.6 The design, arrangement, color, and spacing of sign shall be as shown on the plans, in the MUTCD and the Standard Highway Signs book.

2.7 There shall be no gaps in the borders of the signs.

Construction Requirements

3.1 General.

3.1.1 Traffic sign details not shown on the plans shall conform to the MUTCD and Standard Highway Signs book. Traffic sign supports and framing members shall be in accordance with the AASHTO "Standard Specifications for Structural Supports for Highway Signs, Luminaires and Traffic Signals".

3.2 Manufacture and Assembly

3.2.1 Prior to the application of the retroreflective sheeting, the aluminum sheets shall be one piece except and have been cut to the required sizes, with the corners at the prescribed radii, with true and smooth edges, and shall be free of burrs or ragged breaks.

3.2.1.1 The aluminum shall be properly degreased and etched or treated in accordance with ASTM B 449, Class 2.

3.2.2 Application of retroreflective sheeting. The sheeting shall be applied to the face of the aluminum sheeting by a heat vacuum applicator method or by a mechanical roller application in accordance with the recommendations of the sheeting manufacturer. The face of the sign shall be completely covered by the retroreflective sheeting. Borders of pressure-sensitive adhesive type retroreflective sheeting shall be applied by means of a 2 in. (50 mm) rubber hand roller as recommended by the sheeting manufacturer. All signs shall contain a legible date of manufacture, located in the lower right corner on the back of the sign, applied with permanent marker or paint (i.e., 9-04)

3.2.3 Application of Sign Copy. Application of copy for traffic signs shall be cut-out or silk screened as specified by the sheeting manufacturer. Non-adhesive cut-out copy shall be bonded to the sign surface by the heat vacuum applicator method.

3.2.4 Appearance. Any damage to the retroreflective sheeting appearing in the completed sign shall be cause for rejection. Patching will not be permitted.

3.3 Installation of Traffic Signs

3.3.1 The top edges of all signs shall be horizontal. Any chipping or bending of sign panels shall be cause for replacement at the Contractor's expense.

3.3.2 Ground-mounted signs in most cases should be erected to face 2 degrees away from the direction of approaching traffic. Ground mounted signs on curves or steep grades may need to be adjusted to maximize retroreflectivity. Overhead mounted signs shall be erected to face downward 5 degrees from vertical.

3.3.3 Unless otherwise specified, sign mounting height shall be 7 feet to the bottom of the sign as measured from the edge of pavement (gutter) of the roadway.

3.3.4 The edge of the mounted sign shall be 3 feet edge from pavement (gutter). This distance may be adjusted due to local constraints at the discretion of the Engineer.

3.3.5 When two or more signs are installed on the same supports, the signs shall be butted together unless otherwise specified on the plans or MUTCD. There shall be no gaps between the signs.

3.3.6 The posts for traffic sign shall be plumb and properly oriented with the roadway.

3.3.7 When signs are ordered removed, the entire assembly including the post shall be removed. Unless otherwise shown on the plans, the steel and sign panels shall become the property of the City.

3.3.8 When signs are ordered relocated, new steel posts and all necessary mounting hardware shall be provided unless otherwise shown on the plans. Unless otherwise specified, removed steel shall become the property of the City.

3.3.9 . Steel "U" posts shall be set in holes excavated to three feet deep. After inserting posts, the holes shall be backfilled with granular material placed in thoroughly compacted layers not exceeding 6 inches in depth, care being taken to preserve the alignment of the posts. When more than one post per sign is required, the posts shall be parallel and plumb. Posts bent or otherwise damaged shall be removed and replaced.

3.3.10 Steel "U" posts may also be driven to three feet deep. A suitable driving cap shall be used. Battered heads will not be accepted. Posts shall not be driven with the assembly or sign attached.

3.3.11 When rock is encountered in erecting posts, the depth to be drilled into the rock and any required grouting shall be as directed and subsidiary to the item.

Method of Measurement

4.1 Traffic signs installed will be measured by the square foot. This will include all posts and mounting hardware to install the sign as indicated.

4.2 Removal of traffic signs will be measured as a unit. A unit will include all posts, mounting hardware and all signs on the same post.

4.3 Relocating traffic signs will be measured as a unit. A unit will include removing posts, furnishing new posts and mounting hardware and erection of all signs on the new post(s).

Basis of Payment

5.3 The accepted quantities of signs will be paid for at the contract unit price per square foot of sign installed, complete in place

5.4 The accepted quantities of signs removed will be paid for at the contract unit price per each sign removed

5.5 The accepted quantities of signs relocated will be paid for at the contract unit price per each sign removed

5.6 Excavation for posts shall be subsidiary.

5.7 Concrete and grout required shall be subsidiary.

Pay Items and Units, Section 615 – Traffic Signs:

615.1	Traffic Sign	SF
615.2	Remove Traffic Sign	Each
615.3	Relocating Traffic Sign	Each

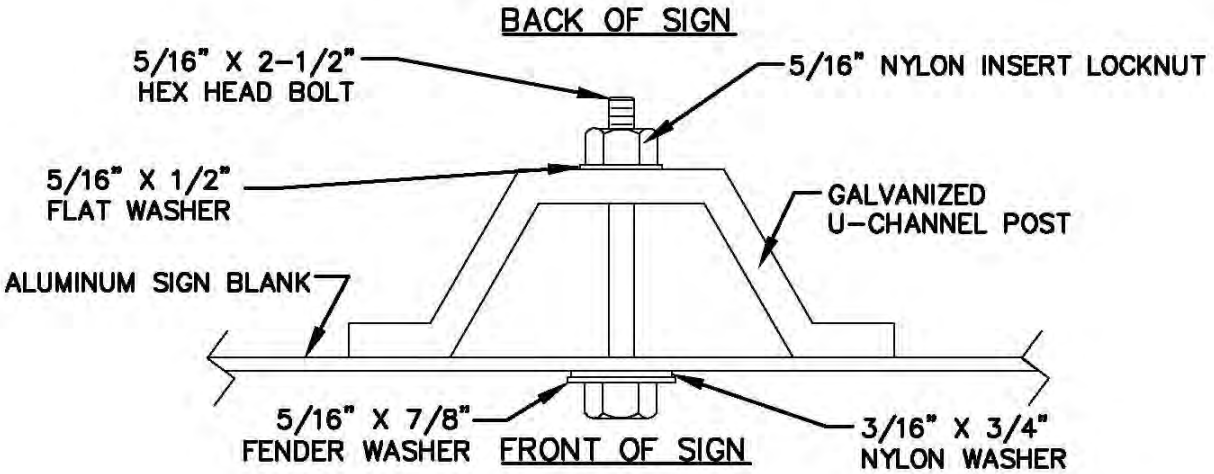

U-CHANNEL POST ASSEMBLY DETAIL

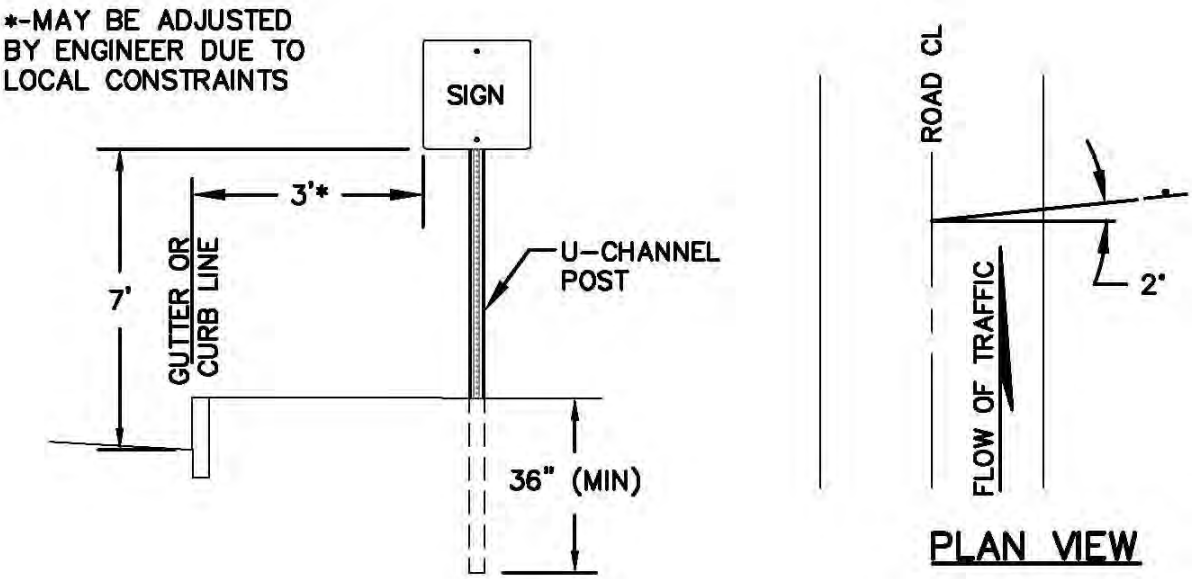

PLAN VIEW

1. FOR GALVANIZED U-CHANNEL POST SPECIFICATION SEE STANDARD SPECIFICATION SECTION 615.
2. THE STAINLESS STEEL HEX HEAD BOLT LENGTH SHALL BE INCREASED TO ACCOMMODATE A THICKER SIGN MATERIAL.
3. TOP OF POST SHALL BE A MINIMUM OF 3 INCHES TO A MAXIMUM OF 6 INCHES BELOW THE TOP OF THE SIGN.
4. U-CHANNEL POSTS SHALL NOT BE SPLICED AND DO NOT REQUIRE CHANNEL BRACKETS.
5. U-CHANNEL POSTS SHALL BE INSTALLED 36" OR GREATER BELOW EXISTING GROUND.

SIGN AND POST DETAIL

S:\DWG\DETAILS\TRAFFIC\615-1 SIGN.DWG

NOT TO SCALE

FIG. 615-1

SECTION 616 -- TRAFFIC SIGNALS

Description

1.1 This work shall consist of furnishing and installing traffic signals, pedestrian signals, or flashing beacons including poles, mast arms, foundations, and all necessary fittings, cables, and components ordered.

1.2 Traffic signal terms shall be in accordance with those defined in the MUTCD.

Materials

2.1 A list of the recommended materials required to install the system may be included as an amendment to this specification, but the City will give no guarantee as to the completeness of this list.

2.1.1 Electrical materials shall meet the standards herein, local and utility codes, and the National Electrical Code, where applicable.

2.1.2 Drawings, manufacturer's specifications, and applicable catalog cuts for all materials and components shall be submitted in accordance with 104.02. An additional set of final approved documents, to total 6 sets, shall be supplied to the Engineer.

2.2 Traffic Signal Heads.

2.2.1 Housings. Housings shall be constructed of die cast aluminum or polycarbonate with a smooth outer surface and shall be capable of holding the optical units securely in place. Polycarbonate will not be accepted for pedestal mounted housings. Housings shall be adaptable for pedestal, bracket, or rigid mast-arm vertical or horizontal mounting. The assembled housing shall be dust proof and moisture proof. Each housing shall be equipped with a hinged door of die cast aluminum or polycarbonate to hold the lens and parts of the optical units. The doors shall be designed to insure uniform pressure around the door frame when closed. Doors shall be fastened by hinged wing nut assemblies or other approved fasteners. Unless otherwise indicated on the plans, units shall be furnished with approved sun shield visors, not less than 10 inches in length. If either longer visors than those specified above or louvres are deemed necessary, they shall be furnished and installed.

2.2.1.1 The assembled housings shall be made up of individual sections fastened together with bolts. The assembly of sectional units shall present a smooth unbroken contour of pleasing appearance. Each end of the housing assembly shall have an opening for a 1-1/2 inch pipe nipple. The area around this opening shall be reinforced and serrated so that lock nuts will seat firmly.

2.2.1.2 One cap shall be supplied with each assembled housing to act as a cover over the hole in the top to prevent water from entering.

2.2.2 Housing adaptors. Housing adaptors for pedestal mounting shall be constructed of die cast aluminum only. They shall be adjustable with serrated surfaces to permit the housing to be locked in the desired horizontal position. The adaptors shall be secured to the bottom of the housing by means of a close nipple, shall slip-fit at least 7 inches over a standard traffic signal post 4 inches in diameter, and shall be secured to the post by a minimum of four set screws. Adaptors shall contain raceways from the housing to the post to protect the wires from the elements.

2.2.3 Signal Backplates Unless otherwise specified, all traffic signals shall be furnished with a 5 in. backplate. Backplates shall be poly carbonate, louvered, flat black in color.

2.2.3.1 Backplates shall have a 2 inch yellow reflectorized border. Reflective material shall meet the specifications for High Intensity ASTM D4956, Type 3 Reflective Tape.

2.2.3.1.1 The requirement in 2.2.3.1 shall not apply where there will be existing signals on the mast arm remaining that contain non-reflective backplates.

2.2.4 Mast arm brackets. Mast arm brackets shall be as indicated in the list of materials shown in the proposal.

2.2.5 Lamps. LED lamps shall have a regulated power supply designed to electrically protect the diodes. The lamp shall be water tight and sealed to eliminate contaminants. The lamp shall be capable of operating at ambient air temperatures of -40° F to 140° F.

2.2.5.1 Each LED module shall be wired with two leads which shall terminate at the terminal block in each signal head. Separate leads shall be used to wire the block to the base. Leads shall be 18 AWG stranded wire. With slip on terminal ends.

2.2.6 Optics. LED lamp life shall be a minimum of 100,000 hours of continuous operation. Power consumption for 12” indications including power supply shall not exceed 20 W and have an initial output of 1900-lumens. The units shall be readily accessible for maintenance.

2.2.6.1 LED modules shall conform to the standards set forth by the Institute of Transportation Engineers and shall be of the color indicated, circular in shape, with a visible diameter of approximately 12 in., or approximately 8 inches, if so specified. Each lens shall be true to color, of best quality plastic, free from imperfections, of high luminous transmission, conforming to the standards of ANSI D 10.1. Lens configuration shall be as specified in the MUTCD,

2.3 Pedestrian Signal Heads.

2.3.1 General. Pedestrian signal heads shall be LED type conforming to the Institute of Transportation Engineers Standard for Adjustable Face Pedestrian Signal Heads. The LED aluminum pedestrian signal displays bright and uniform symbol message “HAND” in portland orange and “WALK PERSON” in lunar white. Both messages shall be contained in a single section head.

2.3.2 Housings. Housings shall be one piece polycarbonate, unless otherwise specified, complete with top, bottom, sides, and back. For mounting purposes, the top and bottom of the housing shall have openings to accommodate standard 1-1/2 in. pipe brackets. The outside surface of the openings shall be serrated to provide for positive positioning of the housing. Doors and fasteners shall be as specified in 2.2.1. The completed assembly shall be dust and moisture proof. Each housing shall include a solar screen visor installed parallel to the face of the "HAND/WALKING PERSON" symbol. The solar screen assembly consists of a minimum of 20 straight horizontal louvers and 21 zigzag pattern louvers. The solar screen visor assembly shall be held in place using stainless steel screws.

2.3.3 LED Modules. Each LED module shall consist of an assembly that utilizes LEDs "RAISED HAND" and the "WALKING PERSON" modules as the light source in lieu of an incandescent lamp. Pedestrian LED modules shall be engineered to fit in all ITE compliant conventional cast aluminum pedestrian signal housings. Each LED Module shall utilize appropriate technology to achieve the required color and shall be the ultra bright type rated for 100,000 hours of continuous operation from -40° F to 165° F. Each individual LED module shall be wired such that a catastrophic loss or failure of one LED will result in the loss of not more than 5 percent of the signal module light output. The modules shall be rated for a minimum useful life of 48 months. All wiring and terminal blocks must meet the requirements of Section 13.02 of the ITE Publication Equipment and Material Standards, Chapter 2 (Vehicle Traffic Control Signal Heads).

2.3.3.1 Each LED module shall feature two 39-inch long 20AWG minimum wire lead with strain relief and spade terminals for connection to the terminal block of the signal heads. One of the conductors shall contain white insulation to signify neutral. The color of other conductor shall be different and shall be used to differentiate between the "RAISED HAND" and the "WALKING PERSON" LED modules. The two conductors shall be 600 Volt, 20 AWG minimum, jacketed wires conforming to the National Electric Code, rated for service at 220° F. Each LED module shall incorporate a printed circuit board containing all required LEDs and circuit components.

2.3.4 Lenses. The external lens surface shall be smooth with no raised features, so as to minimize the collection of dirt, debris, and other particulate contaminants, which may impact luminous intensity, and to facilitate periodic cleaning. External lens facets are prohibited. Both the "RAISED HAND" and the "WALKING PERSON" LED modules shall be filled with LED"s to give the appearance that the entire image is illuminated when energized. Outlined images will not be permitted. The height of the "RAISED HAND" and the "WALKING PERSON" images on the module shall not be less than 10 in. and the width of each image shall not be less than 7 in. The uniformity ratio of an illuminated symbol shall not exceed 4 to 1 between the highest luminance area and the lowest luminance area in the module.

2.3.5 Count Down Timers. The countdown timer, if required, shall be 16 inch by 18 inch module, LED overlaid filled countdown style with the filled "RAISED HAND" on the left and the countdown on the right. The module shall only operate in clearance cycle countdown

mode. The module will start counting when the flashing clearance signal turns on and will countdown to "0" and turn off when the steady "RAISED HAND" signal turns on. The units shall not have any external attachments, dip switches, toggle switches or options that will allow the mode to be changed from counting the clearance cycle, to the full walk/don't walk cycle or any other modification to the icons or digits. The control and regulation module shall be of the "smart" type in order for the countdown displays to be automatically adjusted with the programmed intervals of the traffic controller. At power on, the module enters a single automatic learning cycle. During the automatic learning cycle, the countdown display shall remain dark.

2.4 Traffic Signal Poles, Mast Arms and Pedestals.

2.4.1.1 General. Traffic signal structures shall be designed in accordance with the current AASHTO Standard Specifications for Structural Supports for Highway Signs, Luminaries and Traffic Signals. Traffic signal mast arms shall be designed to support all proposed components as shown on the plans. Minimum clearance to the bottom of overhead signal housings shall be 16 ft. Signal mast arm structures shall be designed based on the following criteria:

Basic Wind Speed: 100 mph
Design Life: 50 Years
Fatigue Importance Category: Category II
Natural Wind Gust Loading shall be considered
Truck Induced Gust Loading, Galloping Loads and vortex shedding effects do not need to be considered.

2.4.1.2 Steel structures, unless otherwise indicated, shall be hot dip galvanized in accordance with ASTM A123.

2.4.1.3 Concrete foundation shall be concrete Class B meeting the requirements of Section 520. Reinforcing steel shall meet the requirements of Section 544. The foundation shall be as shown on the plans.

2.4.1.4 Anchor bolts shall conform to ASTM A36 Grade 55 having minimum yield strength of 55,000 psi with threaded end and hex nuts (2 per bolt), galvanized in accordance with ASTM A153.

2.4.1.5 Mast-arm structure and foundation (when required) design calculations and shop drawings shall be submitted for documentation in accordance with 104.02.

2.4.1.6 Wood poles shall be Class IV, with a fiber bending stress of 8,000 psi, to a length specified conforming to Rural Electrification Administration (REA) Specification DT-5C.

2.4.1.7 Messenger cable and guy cable shall be seven strand wire with a breaking strength of 8,000 pounds, double galvanized in accordance with AASHTO M 111.

2.5 Traffic Signal Controllers and Cabinets.

2.5.1 General. The controller shall operate on 120 volt, 60 hertz cycle alternating current, and shall be delivered completely wired and enclosed in a weatherproof cabinet. All components shall be new, and unless noted, the use of solid state components shall be required. Controllers shall be programmable, menu driven with the capability of having concurrent pedestrian cycles, and exclusive pedestrian cycle, or both. All controllers and cabinets finished shall comply with the National Electrical Manufacturers Association (NEMA) current standard.

2.5.1.1 All controllers shall be wired to flash yellow in phase 2 and phase 6, and red in all other phases. Following an interruption of power all eight phase controllers shall start in a flashing mode of operation and will begin automatic operations at the beginning of the yellow period for phase 2 and phase 6.

2.5.1.2 Bench test. All components of the controller and cabinet shall be bench tested for a minimum of 48 continuous hours by the Contractor, prior to delivery to the project. Testing shall be accomplished by the use of a test board utilizing the phasing shown on the plans. Testing will be checked by the Engineer. The Contractor shall notify the Engineer at least 3 days prior to testing. Any defective components shall be replaced and subsequent testing shall be performed to the satisfaction of the Engineer. Upon completion of satisfactory bench testing, a written approval will be supplied to the Contractor by the Engineer. This approval authorizes delivery to the project only and does not relieve the Contractor from ensuring proper operation of the equipment. The approval shall accompany the cabinet and controller when delivered to the project.

2.5.2 Controller cabinet. All timing and flashing mechanisms shall be enclosed within a dust and moisture proof cabinet made from .125 inch thick aluminum. Cabinet shall be mounted on a 15 inch factory extension base. The extension base shall be the same width and length as the cabinet. The main door shall be mounted on a full length hinge with stainless steel hinge pin and having a three point latch. The door shall contain a screened air intake opening with two filtered thermostatically controlled 115V ventilation fans capable of 100 cfm airflow. The door handle shall be stainless steel. An auxiliary door for the police panel shall be provided and be located in upper third of the main door. Two interior shelves shall be provided. All exterior seams of the cabinet shall be continuously welded. Interior and exterior finish shall be natural aluminum, unless otherwise specified. Cabinet shall not have any company name plate or logos on outside of cabinet. Bottom edge of cabinet shall be sealed where it meets the concrete base. Cabinet shall be fully loaded and components shall be factory wired. **Any field modifications to the cabinet shall be completed by factory trained representative.**

2.5.2.1 Main panel. Panel shall contain enough load switches and flash transfer relays execute maximum number of phases the cabinet is capable of providing, but no less than twelve load switch positions, six flash transfer relay positions, and one flasher position shall be provided. The main panel shall also contain the N.E.M.A. standard "A", "B",

"C" and “D” connecting cables hard wired to terminal blocks mounted on the upper third of the panel. Connecting cables for a N.E.M.A. twelve channel conflict monitor shall be terminated on terminal blocks on the panel. All unused red, yellow, green and walk input wires from the conflict monitor shall be terminated to a terminal block on the main panel. The main panel shall be wired for standard eight vehicle phases, four pedestrian phases and four overlaps, or as per plans. A terminal block shall be provided as a means of assigning each flashing output to flasher circuits one or two. A terminal block on the main panel shall be provided for mounting four pedestrian cards. The pedestrian isolation cards shall convert low voltage AC from the push buttons to logic ground, to be used as an input to activate the pedestrian phase. Pedestrian isolation cards shall be capable of being installed and removed by a screwdriver. Power panel shall contain two circuit breakers, one 15 AMP breaker to switch auxiliary devices and one 30 amp breaker to serve as a main breaker. A GFCI wired duplex convenience outlet shall be provided in the cabinet

2.5.2.2 Lightning/Surge Arrestors. Separate from the power panel, a surge arrestor shall be provided and a two position terminal block shall be provided for connection of A.C. service line.

2.5.2.3 Maintenance Panel. The panel shall contain an auto-flash switch, controller on-off switch, and one cabinet light switch, and stop time on/auto switch. Cabinet light switch shall control a lamp mounted on the top of the cabinet.

2.5.2.4 Police Panel. The panel shall contain a signals on-off switch, auto-manual switch, and an auto-flash switch. A two position terminal block mounted behind the police panel shall be provided to connect an optional manual control cord.

2.5.2.5 Loop Panels. Two loop terminating panels shall contain eight fifteen position connectors to allow for the easy installation of loop detector harness. One position wired to each controller vehicle phase and overlap phase with corresponding green input shall be provided.

2.5.2.6 Locks. The lock for the main door of the cabinet shall be a tumbler type lock as recommended by the manufacturer of the signal equipment. A police-type lock shall be provided in the auxiliary door. Two sets of keys shall be furnished for each lock.

2.5.2.7 Additional Cabinet Equipment.

2.5.2.7.1 A retractable shelf (13”L x 11” W X 2” H) with hinged cover for storage of prints and laptop computer support shall be affixed to the shelf below the timer.

2.5.2.7.2 Equipment or modifications as outlined in the Contract Special Provisions.

2.5.2.8 Fire Pre-emption. Fire pre-emption shall be activated by optical detection equipment with optical detectors. Fire pre-emption shall clear the existing phase through

a normal clearance followed by the fire phase as shown on the plans for the minimum time specified. The fire phase shall give a green in the called direction. The confirmation light and siren (if used) shall be activated only during the fire pre-emption phase, after the call phase is satisfied. Upon release of the fire pre-emption, the controller shall provide a green to the major movement.

2.5.2.8.1 The Engineering, design, and integration of the fire pre-emption shall be by the manufacturer of the equipment, in cooperation with the supplier of the signal controller equipment.

2.5.2.8.2 The confirmation light shall be operated by a solid state load switch cube surface mounted on a panel. No back panel load switches shall be used for the confirmation light.

2.5.2.8.3 Confirmation light shall be a self-contained 120 volt AC industrial strobe light beacon with a weather-resistant, fully enclosed, rugged, cast aluminum base and lexan red optic lens.

2.5.2.8.4 Optical detector locations shall be verified by the Engineer to assure optimum reception. Optical detector cable shall run unspliced from the optical detector head to the controller cabinet.

2.5.3 Contacts. All contacts used in connection with interval indications shall be of pure coin silver or equivalent, and shall be capable of breaking and carrying 10 amperes at 125 volts alternating current. The contacts shall be readily accessible and capable of being replaced in the timer without the use of any tools other than pliers and screw drivers.

2.5.4 Flashers. Intersection beacon flashers shall be housed in an approved cabinet containing: 25 ampere NEMA cube-type flasher, 10 ampere circuit breaker, and disconnect switch. All components shall be completely wired and mounted within the cabinet. Painting shall be in accordance with 3.13.

2.5.5 Pedestals. Meter pedestal shall be as indicated on the plans and within the special provisions of the Contract.

2.5.6 Radio and television interference. Electrical equipment shall be prevented from interfering with radio and television reception.

2.6 Cable and Wire.

2.6.1 General. Cable shall be plastic covered cable meeting the applicable requirements of the International Municipal Signal Association (IMSA) specifications. The conductor color coding shall not be by means of printed code. Actual color coding shall be used.

2.6.2 The minimum size wire for the circuits shall be as follows:

Table 616- 1 Signal Equipment Minimum Wire Sizes

Service	A.W.G. #
To Controller	8 stranded
Controller to Pole or Pedestal	14 stranded
Pole or Pedestal to Receptacles	14 stranded
Controller to Push Buttons	14 stranded
Detector Loop Leads	16 IMSA Spec. 50-2
Detector Loop Wire	14 IMSA Spec. 51-5
Equipment Grounding Conductor	8 stranded

2.6.3 Detector loop lead-in cable shall be shielded, single pair, stranded conductors with a drain wire enclosed in polyethylene jacket conforming to the requirements of IMSA 50-2. The use of cables carrying more than one pair of conductors is prohibited.

2.7 Conduit. Traffic signal conduit, pull boxes, frames, and covers shall conform to Section 614

2.7.1 Conduit for all lines, except the service, shall be 3 inches in diameter. Service conduit shall be rigid steel conduit 1-1/4 inches inside diameter.

2.8 Painting. Prior to erection and assembly, if not manufactured of polycarbonate material, the entire traffic or pedestrian signal housing and visors shall be painted with an approved zinc rich primer and a finish enamel coat of federal yellow 13538. The doorface and inside visor shall be federal black 17038.

2.9 Backfill for foundations, unless otherwise ordered, shall be Granular Backfill - gravel conforming to the requirements of 209.2.1.4.2.

Construction Requirements

3.1 All electrical installations shall comply with the requirements specified herein, local and utility codes, MUTCD, and the National Electrical Code (NEC).

3.2 A preconstruction meeting with the Contractor, signal Subcontractor, Engineer and Department of Public Works staff shall be arraigned a minimum of 3 days prior to the start of signal installation.

3.3 Each signal head mounted on a mast arm shall be installed with 1/8 inch diameter aircraft cable, looped around the mast arm and mast arm bracket, as a safety device to prevent the signal head from falling. Cable ends shall be fastened by two opposing "U" clamps. When suspended by this cable, the top of the signal head shall be no more than 6 inches below the bottom of the mast arm.

3.4 Conduit lines. All conduit lines necessary shall be constructed for the proper operation of the signals and shall conform to Section 614

3.4.1 All conduits terminating in the cabinet shall be sealed with duct sealants.

3.5 Concrete foundations with anchor bolts to secure the traffic signal structures, flasher or controller cabinets, and meter pedestals, shall be installed at the locations specified. When directed, the concrete foundation for the controller cabinet shall be raised to any height up to 18 inches above the surface.

3.5.1 Poles shall not be mounted on the leveling nuts until the concrete has cured for at least 7 days or attained a minimum of at least 80 percent of its design compressive strength.

3.5.2 The void created by the leveling nuts between the foundation and the base plate of the structure shall be filled with an approved non-shrink grout.

3.5.3 Prior to placing the controller cabinet on its foundation, silicone sealant shall be applied to the area of contact.

3.6 Inductive Loop Detectors

3.6.1 Loop Installation

3.6.1.1 Curb entry. Nonmetallic conduit shall be utilized from the pull box to its intercept with the saw cut. The visible portion of the curbing shall not be cut for conduit installation. The chase from the saw cut to the splice box should extend no more than one foot from the curb. Conduit shall be installed so that it directly receives the lead-in wire. Curb entry to be filled with clean sand (wash sand) and patched with asphalt. At no time shall it be patched with sealer. See Figure 616-5, section A-A.

3.6.1.2 Saw cut. The saw cut shall be a clean, well defined 5/16 inch wide saw cut without damage to adjacent area. The saw cut depth shall be at least 1-3/4 inches for asphalt and 1-1/4 inches for concrete. The saw cuts shall be overlapped to provide full depth at all corners, and all slots requiring a right angle turn of wire shall be cut at a 45 degree diagonal angle. Prior to the installation of wire, the saw cuts shall be checked for the presence of ragged edges or protrusions, and cleaned and dried. Cutting dust, grit, oil, moisture, or other contaminants shall be removed.

3.6.1.3 Loop wire installation. All loop installations shall be made without damage to the wire or its insulation. All damaged wire shall be replaced. The loops shall be installed as per plans, and shall contain the required number of turns as shown or as recommended by the manufacturer.

3.6.1.3.1 The wire shall be laid in the slot so that there are no kinks or curls and no straining or stretching of the insulation. Loop wire shall be installed as far down in

the slot as possible, using a blunt object similar to a wooden paint stirrer, to seat the loop wire, but in no case shall a screwdriver or other sharp tool be used for this purpose. The loop lead-in wires shall be twisted to provide a minimum of one turn per foot from the loop to the pull box.

3.6.1.3.2 A minimum of 3 feet of slack shall be coiled and left in the pull box. Where the loop wire crosses cracks or joints in the pavement, plastic sleeving shall be used to insulate the wire, to a minimum of 4 inches on either side of the crack or joint.

3.6.1.4 Initial testing. Prior to the sealant, the loop and the lead-in shall be checked for continuity and resistance. In addition, the integrity of the insulation shall be checked by applying a megaohm meter between each end of the loop lead-in and the nearest reliable electrical ground. In the event that no available ground exists, a suitable ground shall be established for the measurement. The megaohm meter reading shall be in excess of 10 megaohms under all conditions. The Contractor, with the Engineer in attendance, shall test and record the meter reading at each location for satisfactory compliance.

3.6.1.5 Sealant. Saw cut sealant shall be an approved flexible embedding sealant used strictly in accordance with the manufacturer's instructions. The sealant shall be poured into the slot to half depth, checked for air bubbles or material pile up, then filled to the roadway level. Excess sealant shall be removed by means of a squeegee, and in any case, be neither a trough nor a mound formed. Sufficient time shall be allowed for the sealant to harden in accordance with manufacturer's instructions before allowing traffic access to the area.

3.6.1.6 Final testing. Repeat the test procedure specified in 3.6.1.4.

3.6.1.7 Detector feeder cable installation. The feeder cable and the loop lead-in wire shall be terminated in the pullbox and all connections shall be spliced, soldered, compounded and taped. The entire splice shall be encapsulated in a waterproof splice kit approved by the Engineer.

3.6.1.8 Record keeping. A record of any modifications to the original installation shall be made by the Contractor. The Contractor shall furnish the Engineer with 3 copies of the corrected or as-built plans including initial and final test results.

3.7 Service and Meter Box

3.7.1 When required, the Contractor shall furnish and install a service riser on the pole selected by the power company in conformity with the plans, and shall also furnish the power company its choice of equipment above the switch or breaker. Wire sizes shall be as specified by either the plans or the power company. In case of discrepancy the large size shall be used.

3.7.2 A NEMA weather proof disconnect switch and cabinet shall be furnished and installed at the location specified. The circuit breakers in this switch shall be 30 amperes.

3.7.3 The Contractor shall make all arrangements for the service connection and be responsible for all charges incurred thereby.

3.7.4 Under no conditions shall any equipment be installed on any utility pole unless specifically stated on the plans.

3.7.5 The Contractor shall notify the telephone company whenever a service connection is to be made on a jointly owned pole, providing the telephone company with the following information:

(a) Intersection
(b) Pole Number
(c) Date and time of preliminary arrangement with electric power company.

3.7.6 In the case of underground services, the Contractor shall furnish and install all equipment as required by the power company, be responsible for all charges incurred thereby, and complete the work to its satisfaction. Meters shall not be installed in manholes.

3.7.7 The Contractor shall be responsible for all outstanding bills of the electric power company for preliminary work done by the power company during the construction of the road to facilitate the service connection of that particular installation. The Contractor shall also be responsible for all service charges until the signals are accepted for operational use by the Engineer.

3.8 Signal Cable and Wire Installation.

3.8.1 The Contractor shall furnish and install sufficient cable and wire to operate the system properly and at least 4 spare conductors in each cable run shall be provided.

3.8.2 No more than one cable shall be permitted in a conduit except to eliminate splices in pull boxes. When more than one cable is permitted, the area of combined cables shall not exceed 30 percent of the inside area of the conduit.

2.9.1 All pedestrian signals and push buttons shall be separately cabled from the field location to the cabinet terminals.

3.9 Signal bases, housings, and controllers shall be furnished and installed as required. All structures and housings shall be plumb after erection.

3.9.1 Multiple housings on a single post shall be grouped together using 1-1/2 inch galvanized pipe and 1-1/2 inch galvanized rail fittings. All attachments to the posts shall be made by means of adaptors conforming to 2.2.2. The center of all housings shall be in the same horizontal plane.

3.10 Miscellaneous electrical equipment. All additional electrical fittings, service conduit, switches, fuses, and such other hardware as is necessary to properly and securely install the equipment shall be furnished. All electrical fittings shall be weatherproof.

3.11 Wiring and connections. All connections shall be spliced, soldered, compounded, and taped, using the following color code:

Table 616- 2 Wiring Color Codes

Red Wire	Red, Main Street
Orange Wire	Yellow, Main Street
Green Wire	Green, Main Street
Red with tracer	Red, Side Street
Orange with tracer	Yellow, Side Street
Green with tracer	Green, Side Street
White	Neutral for all signals
Blue	All steady burning arrows
Blue with tracer	Intermittent arrows
Remaining	Push buttons and spares

Note: The white wire shall be used for all neutral connections and shall be connected to the service ground.

3.12 Ground connections. All installations and equipment shall be bonded and grounded to the service ground rod in accordance with the requirements of the electric power company.

3.12.1 Each signal cable run shall be installed with one green plastic covered copper ground wire to which all equipment shall be bonded in accordance with standard practice. Each base and post, cabinet, and any other component that would be considered a part of the signal system shall be bonded to the ground wire. This ground wire shall be connected to the ground rod at the controller cabinet.

3.13 Painting. The following colors of enamel shall be used:

Table 616- 3 Signal Equipment Paint Matrix

Controller Cabinet	Outside – Natural Aluminum Finish Inside - Natural Aluminum Finish
Housings	Yellow[-2]
Visors	Inside: Black[-1] Outside: Yellow[-2]
Meter Box.	Same color as its mounting

[-1] Black Enamel, conforming to 708-NH 3.75
[-2] Federal Yellow Enamel, confroming 708-NH 3.72

After the signals have been completely installed, two coats of enamel shall be applied to all unpainted or scratched surfaces after the surface has been lightly sanded to remove gloss.

3.14 Operating sequences shall be as shown on the plans or ordered.

3.15Installation of signals and equipment. The signals and equipment shall be installed by competent workmen or the manufacturer's representative.

3.15.1 All field modifications to the cabinet shall be performed only by a factory representative.

3.15.2 Prior to placing the signals in operations, the signal housing shall be hooded with approved non-transparent material or turned to clearly indicate that the signals are not in operation.

3.15.2.1 Signs mounted with the signals shall be covered as specified in 619.

3.15.3 All material including poles, foundations, fittings and cable shall be supplied and installed to make complete operative installation.

3.16Operation. The Contractor shall commence the operation of the signal system only when permitted by the Engineer.

3.17Warranty. Upon completion of the project, the Contractor shall forward to the City all warrants that the equipment which has been installed hereunder shall be free from defects in materials, workmanship, and title, and shall be of the kind and quality designated or described in the contract. The foregoing warranty supersedes all other warranties whether written, oral, or implied. If it appears within 6 months from the date of final acceptance of the work that the equipment installed hereunder does not meet the warranties specified above, the Contractor shall promptly correct any defect of nonconformance with the specifications. This warranty does not relieve the Contractor of the requirement of 105.03.

Method of Measurement

4.1 Traffic signals and flashing beacons will be measured as a unit. Where more than one unit is specified in the contract, separate item numbers will appear for each separate and complete unit.

4.2 Traffic signal foundations will be measured by the number of units installed.

4.3 Inductive loop detectors will be measured by the number of units installed.

Basis of Payment

5.1 The accepted quantity of traffic signals or flashing beacons will be paid for at the contract lump sum price complete in place.

5.2 When an item of conduit appears in the contract, conduit for traffic signals will be paid for under Section 614.

5.2.1 When no item for conduit appears in the contract, any conduit required will be subsidiary.

5.3 The accepted quantity of signal foundations will be paid for at the contract price per each installed, complete in place.

5.3.1 When no item for signal foundations appears in the contract, any foundations required will be subsidiary.

5.4 The accepted quantity of inductive loop detectors will be paid for at the contract price per each installed, complete in place.

5.4.1 When no item for inductive loop detectors appears in the contract, any inductive loop detectors required will be subsidiary.

5.5 The accepted quantity of temporary traffic signals will be paid for at the contract price per each installed, complete in place. Payment shall constitute compensation for all costs to construct install, operate and remove the temporary signals as required, including electrical usage and energizing and de-energizing by the utility company.

5.6 Materials required under 3.10 shall be subsidiary.

Pay Items and Units, Section 616 -- Traffic Signals:

616.1__	Traffic Signals	Lump Sum
616.2__	Flashing Beacons	Lump Sum
616.4__	Relocating Traffic Signals/Beacons	Lump Sum
616.5__	Signal Foundations	Each
616.6	Inductive Loop Detectors	Each
616.9__	Temporary Traffic Signals	Lump Sum

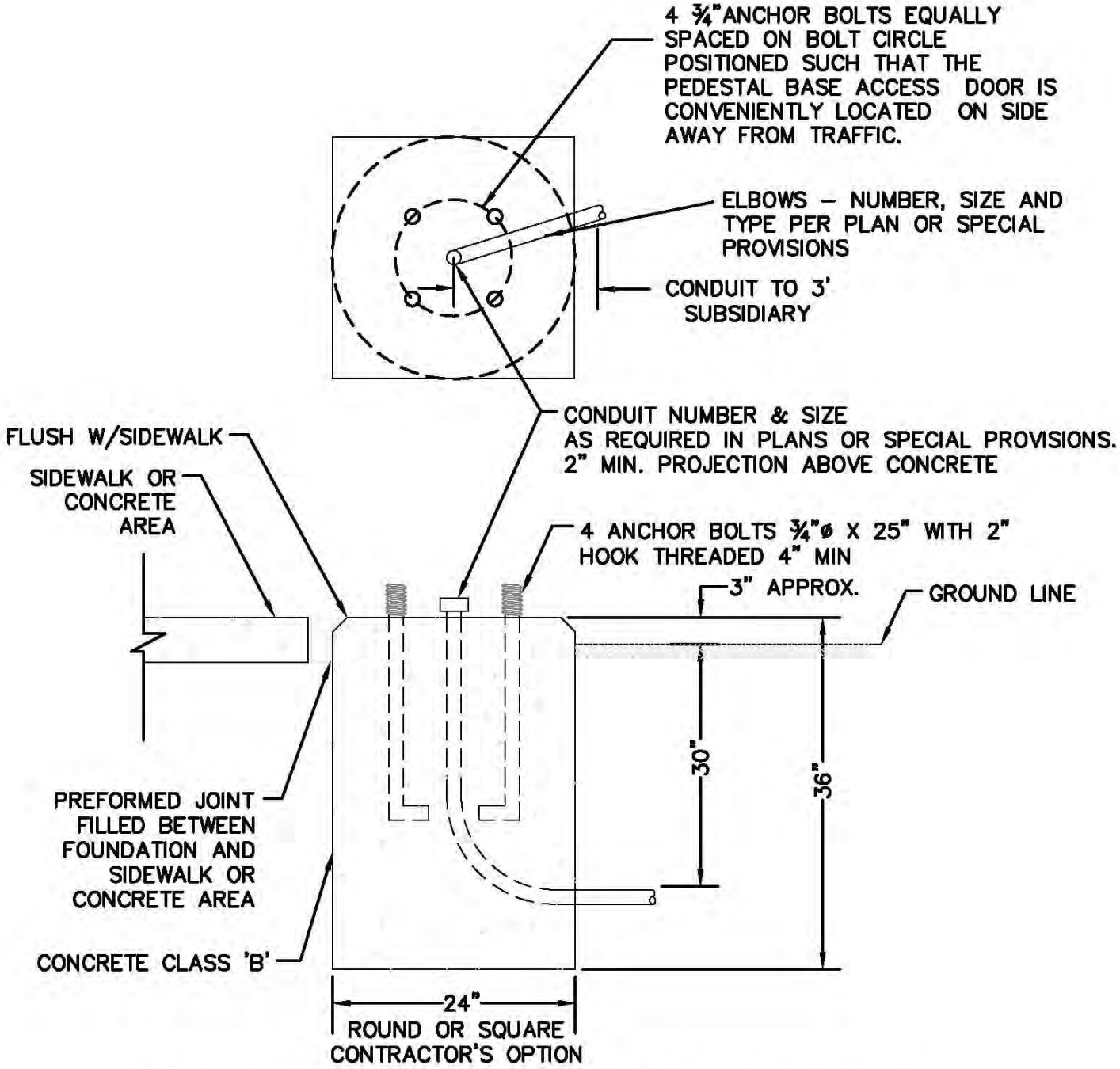

1. SIZE OF FOUNDATION MAY BE CHANGED IN THE PLANS OR SPECIAL PROVISIONS, OR IN THE FIELD AS DIRECTED BY THE ENGINEER.
2. ANCHOR BOLTS SHALL BE SET ACCORDING TO MANUFACTURER'S RECOMMENDATIONS.
3. EXPOSED EDGES TO BE CHAMFERED ¾".
4. OPEN END OF ALL CONDUIT INTO FOUNDATION SHALL BE CAPPED UNTIL SIGNAL CABLES ARE INSTALLED.

CONC. FOUNDATION FOR STANDARD TRAFFIC SIGNAL POST

S:\DWG\DETAILS\TRAFFIC\616-1 TPFOUND.DWG

NOT TO SCALE

FIG. 616-1

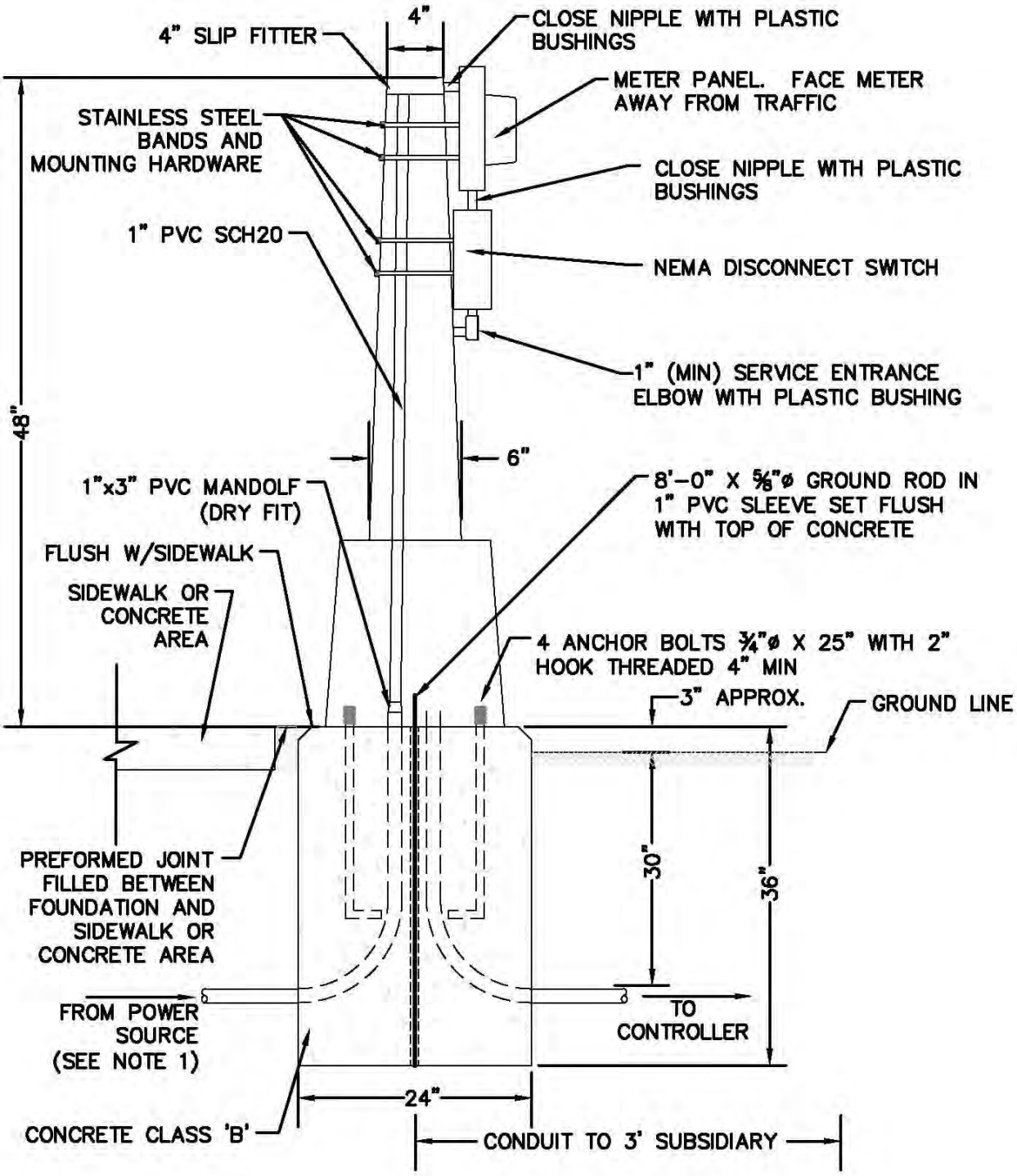

1. ALL CONSTRUCTION FROM POWER SOURCE TO METER PANEL SHALL FOLLOW ELECTRIC UTILITY COMPANY REQUIREMENTS.

TRAFFIC SIGNAL METER PEDESTAL

S:\DWG\DETAILS\TRAFFIC\616-1A METER PED.DWG

NOT TO SCALE

FIG. 616-1A

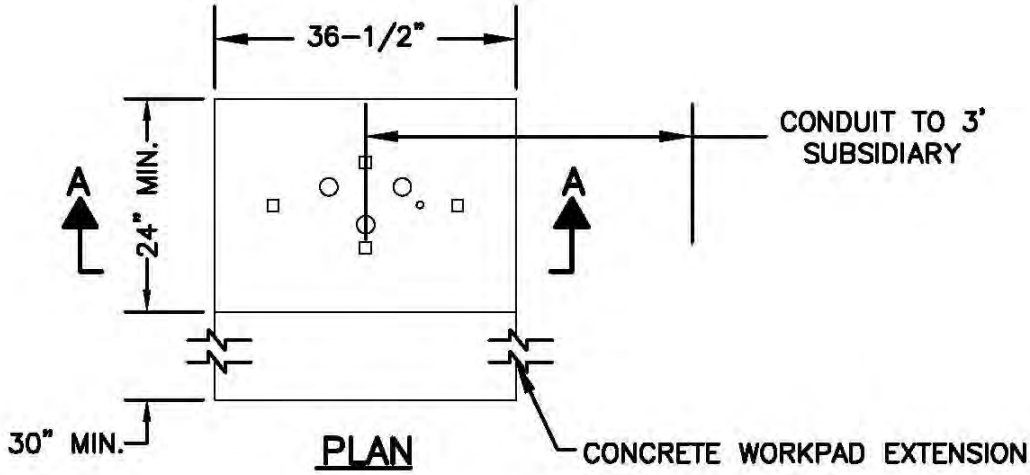

*FOUNDATION SHALL BE 6" WIDER AND LONGER THAN CABINET BASE TO BE INSTALLED

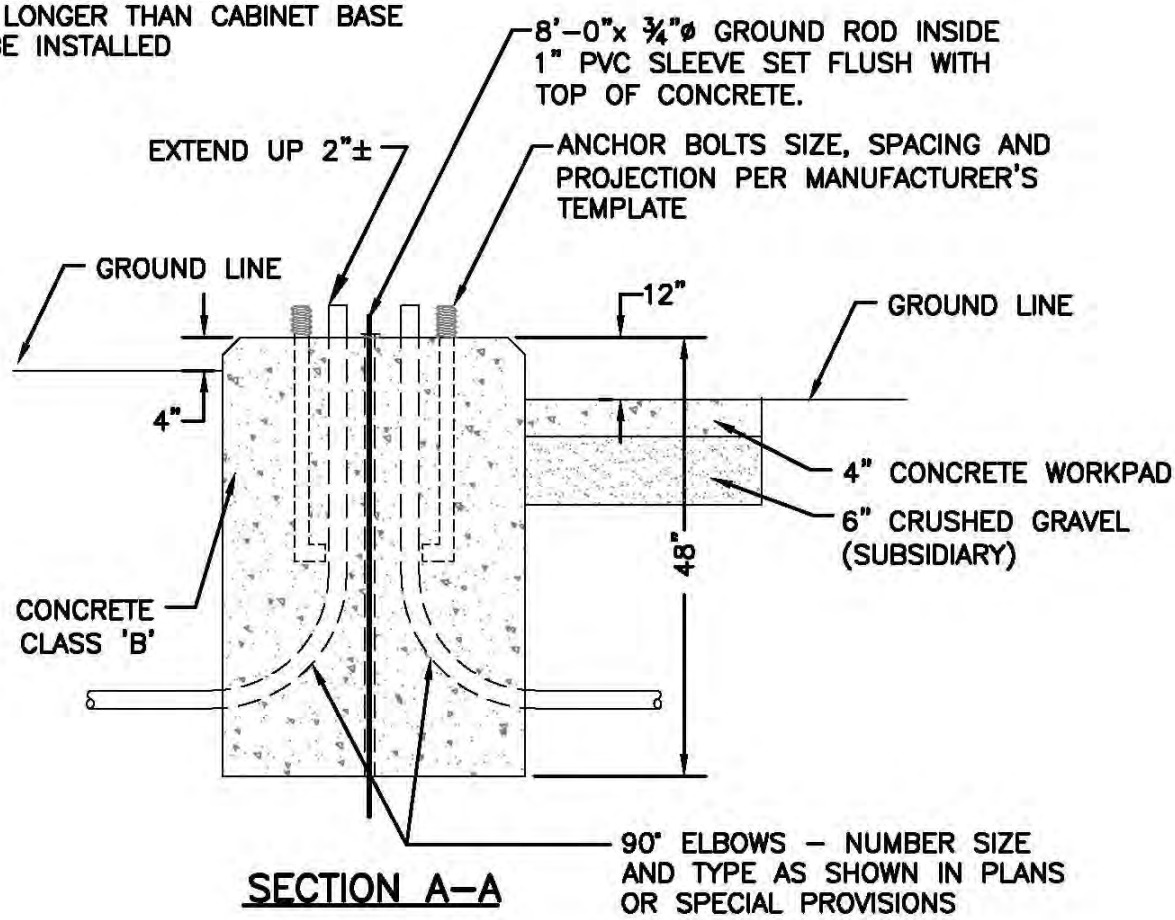

1. WORKPAD MAY BE ELIMINATED IF CONTROLLER IS IN SIDEWALK SECTION.
2. ALL EXPOSED EDGES TO BE CHAMFERED ¾".
3. CABINET DOOR TO BE ORIENTED TO PROVIDE MAXIMUM VIEW OF SIGNALS.

CONC. FOUNDATION FOR CONTROL CABINET

S:\DWG\DETAILS\TRAFFIC\616-2 CABFOUND.DWG

NOT TO SCALE

FIG. 616-2

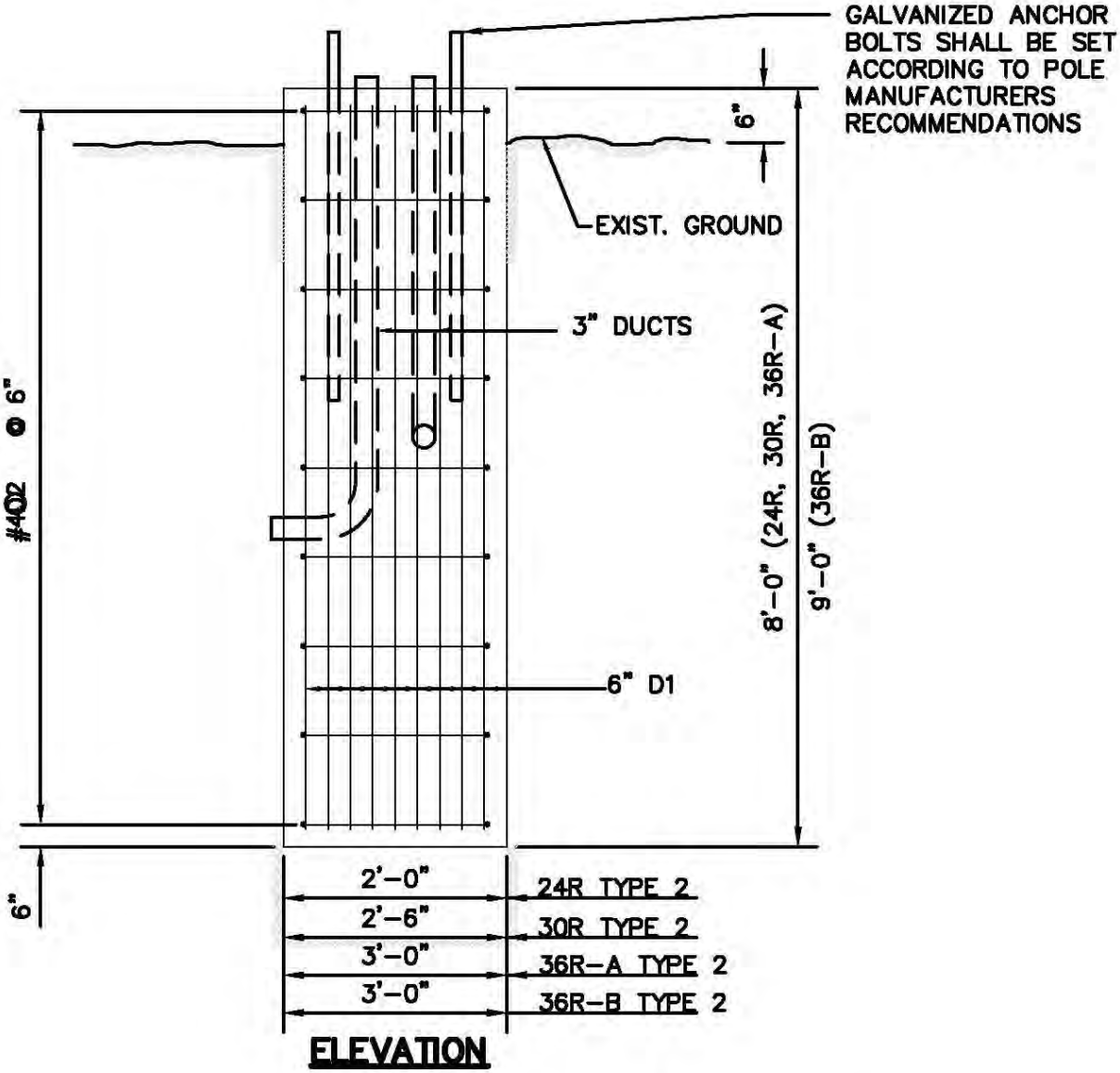

ELEVATION

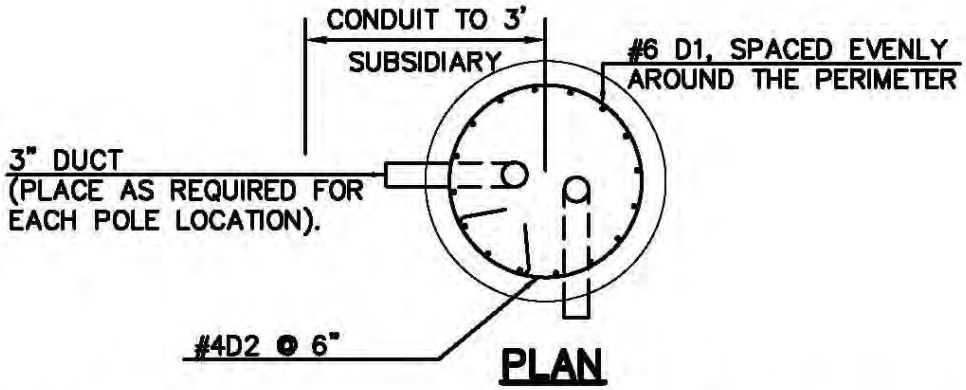

PLAN

TRAFFIC SIGNAL MAST ARM FOUNDATION

S:\DWG\DETAILS\TRAFFIC\616-3 SIGFNDN.DWG

NOT TO SCALE

FIG. 616-3

FOUNDATION TYPE III -- 24R, 30R, 36R*

REINFORCING STEEL SCHEDULE – FIG. 616–4a

MARK	SIZE	NO.	UNBENT LENGTH	TYPE
D1	#6	"X"	"Z"	—
D2	#4	"W"	"Y"	○

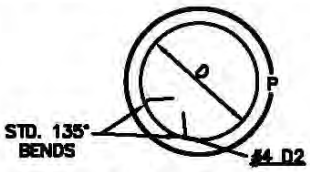

FOUNDATION SIZE	"W"	"X"	"Y"	"Z"
24R	15	12	5'–11"	7–6"
30R	15	16	7'–6"	7'–6"
36R–A	15	20	9'–1"	7'–6"
36R–B	17	20	9'–1"	8'–6"

FOUNDATION SIZE	DIMENSION	
	D	P
24R	1'–6"	4'–8"
30R	2'–0"	6'–3"
36R–A	2'–6"	7'–10"
36R–B	2'–6"	7'–10"

TYPICAL QUANTITIES PER BASE – FIG. 616–4b

ITEM NUMBER	ITEM	UNIT	QUANTITY FOR FOOTING SIZE			
			24R	30R	36R–A	36R–B
▲ 508	STRUCTURAL FILL	CU. YDS.	25	26	29	32
520.11	CONCRETE CLASS A (FOOTINGS)	CU. YDS.	1.0	1.5	2.1	2.4
544	REINFORCING STEEL	LBS.	195	256	317	359

STANDARD ROUND TRAFFIC SIGNAL FOUNDATION – FIG. 616–4c

DETERMINATION OF SIZE FOOTING REQUIRED

FOOTING SIZE	CASE I MAX. h = 40'–0" MAX h' = 22'–0"			CASE II MAX. h = 22'–0"		
	SHAPE	MAX. LENGTH OF ONE MAST ARM WITH ONE LUMINAIRE ON THE SAME POLE (L)	MAX. NUMBER OF SIGNALS FOR CASE I	SHAPE	MAX. LENGTH OF ONE MAST ARM WITH ONE LUMINAIRE ON THE SAME POLE (L)	MAX. NUMBER OF SIGNALS FOR CASE II
24R TYPE 2 (2'–0" x 8'–0")	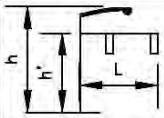	20'	2	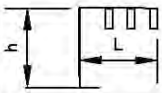	25'	3
30R TYPE 2 (2'–6" x 8'–0")	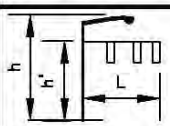	25'	3	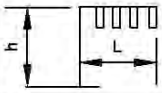	35'	4
36R–A TYPE 2 (3'–0" x 8'–0")	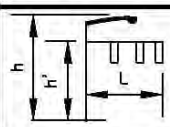	35'	3	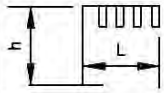	45'	4
36R–B TYPE 2 (3'–0" x 9'–0")	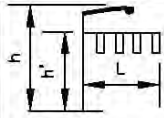	50'	4	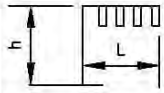	50'	4

NOTE: COMBINATIONS OTHER THAN THOSE SHOWN IN THE ABOVE CHART SHALL NOT BE USED WITHOUT DESIGN APPROVAL

***SEE TRAFFIC SIGNAL FOUNDATION PLAN GENERAL NOTES (FIG. 616–4d)**

TRAFFIC SIGNAL FOUNDATION

FIG. 616–4a,b,c

S:\DWG\DETAILS\TRAFFIC\616-4abc SIGFNDN.DWG

GENERAL NOTES

DRILLED HOLES

1. THE ROUND TYPE 2 FOOTING SHALL BE POURED IN DRILLED HOLES AGAINST UNDISTURBED MATERIAL. THE MAXIMUM DESIGN SOIL PRESSURE IS 1-1/2 TONS/SQ.FT. (BOTH HORIZONTALLY & VERTICALLY). IF THE SOIL IS NOT CAPABLE OF A BEARING PRESSURE OF 1-1/2 TONS/SQ.FT. OR WILL NOT STAND VERTICALLY, THE ENGINEER SHALL REQUEST AN EXCAVATED HOLE AS BELOW.

2. THE DRILLED HOLES FOR THE ROUND TYPE 2 FOOTINGS SHALL BE MADE WITH THE PROPER SIZE AUGER DRILLED TO 7'-9" BELOW THE FINISHED GROUND SURFACE FOR 24R, 30R AND 36R-A, AND 8'-9" FOR 36R-B.

3. TRENCHES FOR THE CONDUITS SHALL BE HAND DUG WITHIN 5'-0" OF THE PROPOSED FOOTING SURFACE, DISTURBING AS LITTLE SOIL AS POSSIBLE IN PLACING OF THE CONDUITS (APPROXIMATELY 2'-6" MAXIMUM DOWN FROM THE EXISTING GROUND SURFACE). THE RESULTING TRENCHES SHALL BE COMPLETELY BACKFILLED WITH ITEM 508 AND COMPACTED ACCORDING TO THE NH SPECIFICATIONS. THE HORIZONTAL LIMIT OF ITEM 508 SHALL BE 5'-0" FROM THE FOOTING SURFACE.

4. THE ENGINEER SHALL REQUEST A BORING AT ANY LOCATION WHERE HE DEEMS QUESTIONABLE SOILS BEFORE PROCEEDING WITH THE DRILLING OPERATION. IF, AFTER THE DRILLING OPERATION, THE SOILS ARE FOUND TO BE UNSUITABLE, THE ENGINEER SHALL REQUEST AN EXCAVATED HOLE AS DETERMINED BELOW OR THE USE A TYPE 1 SPREAD FOOTING.

5. WHERE LEDGE IS ENCOUNTERED THE DRILL SHALL PENETRATE THE LEDGE A MINIMUM OF 3'-0" AND IN ALL CASES A MINIMUM FOOTING LENGTH OF 5'-0" SHALL BE OBTAINED WHERE LEDGE IS DRILLED 3'-0". MAXIMUM DRILL PENETRATION SHALL BE 7'-9" FOR 24R, 30R AND 36R-A, AND 8'-9" FOR 36R-B.

6. ALL REINFORCING STEEL SHALL BE EITHER GRADE 40 OR GRADE 60.

7. ALL REINFORCING STEEL SHALL BE A MINIMUM 3" CLEAR.

▲ EXCAVATED HOLES

1. AS AN ALTERNATIVE TO THE ABOVE DRILLED HOLES, THE ROUND TYPE 2 FOOTINGS MAY BE POURED IN EXCAVATED HOLES, USING THE PROPER FORMS WHICH MUST BE REMOVED, OR PRECAST AND PLACED IN THE EXCAVATED HOLES.

2. THE EXCAVATED HOLES SHALL BE AT LEAST 3'-0" CLEAR OF THE FOOTING SIDES AND 1'-0" DEEPER THAN THE FOOTING. CARE SHALL BE TAKEN TO AVOID OVER EXCAVATING AROUND THE TOP OF THE FOOTING.

3. ANY LEDGE ENCOUNTERED SHALL BE REMOVED TO THE ABOVE LIMITS IF POSSIBLE OR THE ENGINEER SHALL REQUEST A REDESIGN.

4. THE TOTAL EXCAVATED HOLE FOR EACH FOOTING SHALL BE COMPLETELY BACKFILLED WITH STRUCTURAL FILL, ITEM 508, AND COMPACTED ACCORDING TO THE SPECIFICATIONS.

TRAFFIC SIGNAL FOUNDATION GENERAL NOTES

S:\DWG\DETAILS\TRAFFIC\616-4d TRF-SIGFNDN.DWG

FIGURE 616-4d

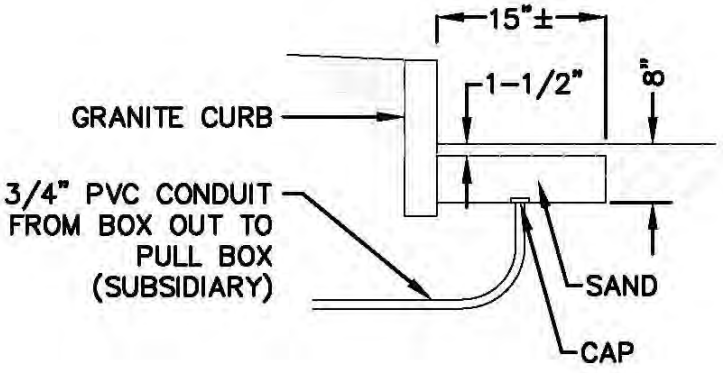

SECTION A-A

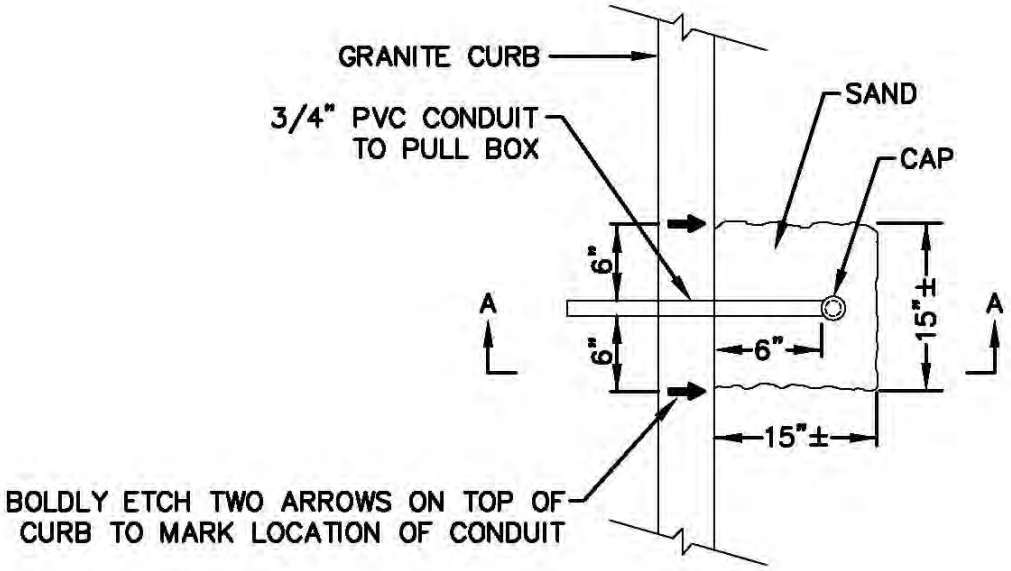

PLAN

DETECTOR BOX OUT DETAIL
STAGE 1: AT PAVING

S:\DWG\DETAILS\TRAFFIC\616-5 SIGNAL DETECTOR BOX.DWG

NOT TO SCALE

FIG. 616-5

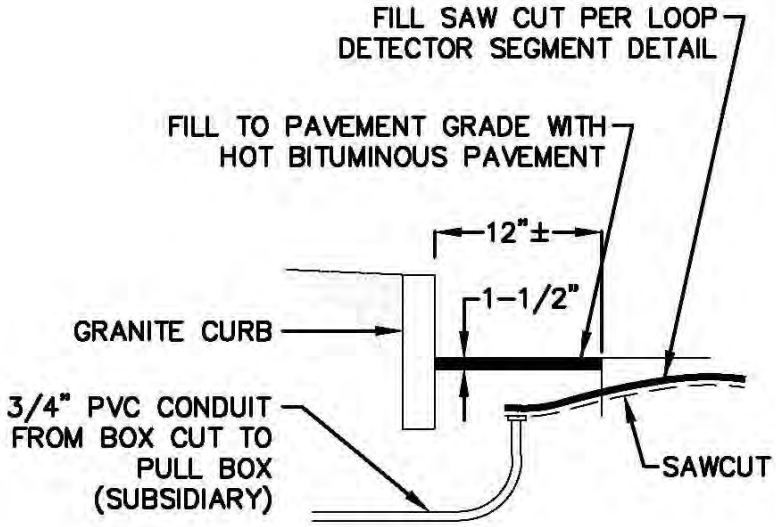

SECTION A-A

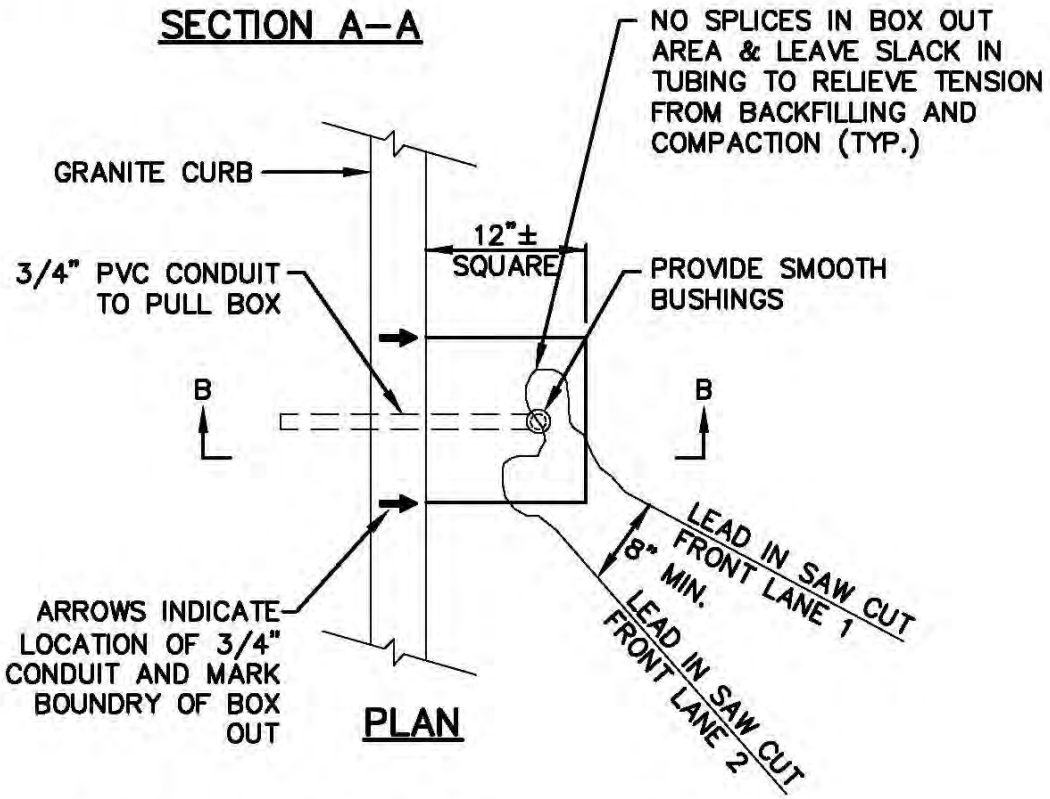

PLAN

NOTES:

1. MAXIMUM OF TWO LEAD IN PAIRS PER 3/4" PVC CONDUIT.
2. TAPE TUBING 3" ON EACH SIDE OF THE SAW CUT BOX OUT BOUNDRY WITH ELECTRIC TAPE.
3. AFTER TUBING IS INSTALLED FILL CONDUIT WITH CRUMPLED PAPER AND SEAL WITH PLIABLE DUCT SEALANT.
4. USE CONSTRUCTION SAND TO COVER AND SUPPORT THE VINYL PLASTIC TUBING.

DETECTOR BOX OUT DETAIL
STAGE 2: AT LOOP INSTALLATION

S:\DWG\DETAILS\TRAFFIC\616-6 SIGNAL DETECTOR BOX.DWG

NOT TO SCALE

FIG. 616-6

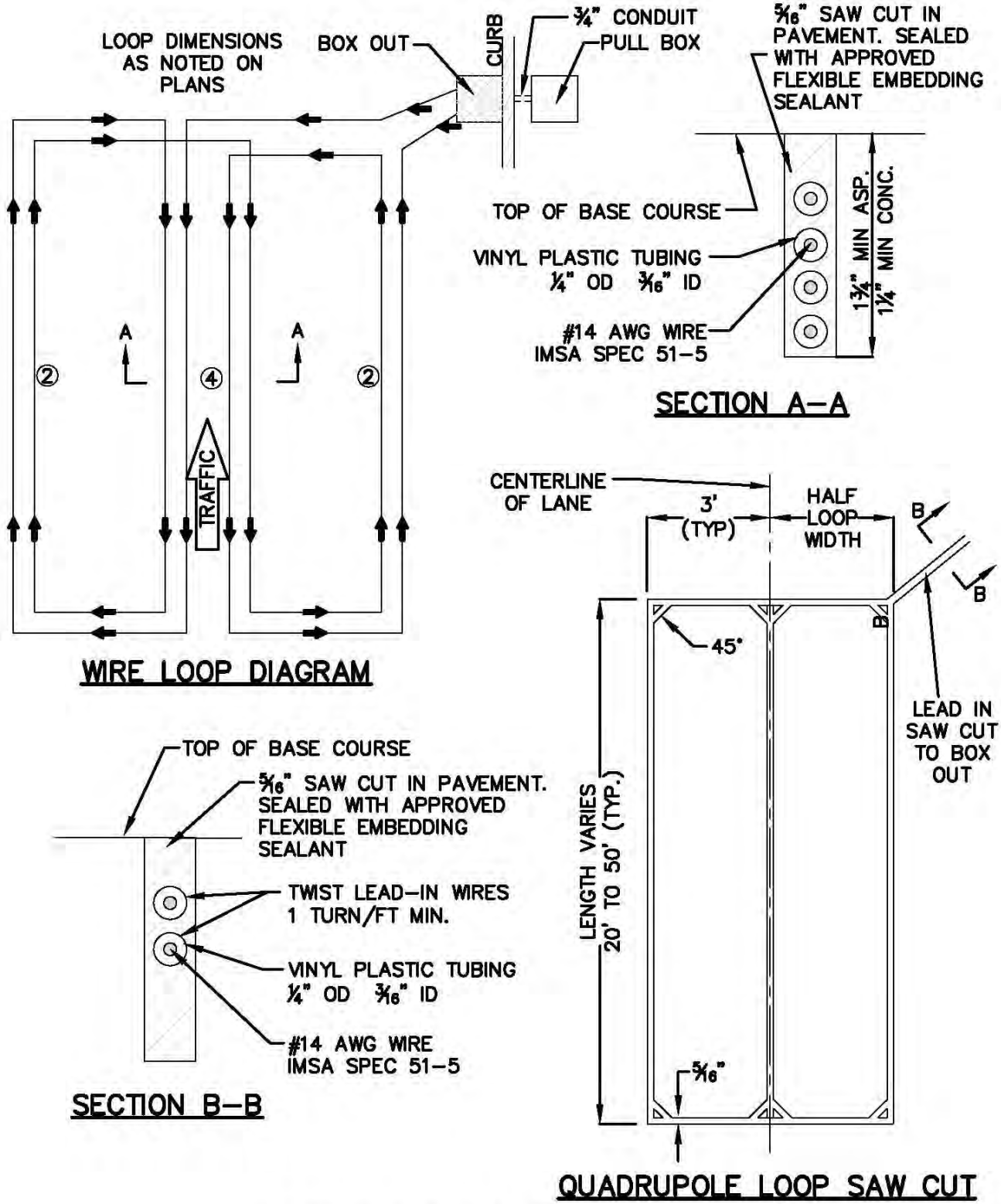

LOOP DETECTOR DETAILS

S:\DWG\DETAILS\TRAFFIC\616-7 LOOP DETECTOR.DWG

NOT TO SCALE

FIG. 616-7

SECTION 618 -- UNIFORMED OFFICERS AND FLAGGERS

Description

1.1 This work shall consist of furnishing qualified officers and flaggers, when ordered.

Requirements

2.1 Uniformed officers shall be hired from the Manchester Police Department whenever possible for the control of traffic on City streets. The Contractor shall give the Manchester Police Department a minimum of 48 hours notice prior to his need for their services.

2.2 In the event a Police Officer is not available, the Contractor may procure uniformed officers and flaggers from a commercial security company, provided they are acceptable to the Manchester Police Department for the purpose of traffic control.

2.3 Uniformed officers employed by the Contractor shall have had formal traffic control training, as provided by the Police Standards and Training Council.

2.4 Officers and flaggers shall have been given specific instructions from the Contractor as to their duties and responsibilities, both to the public and to their fellow workers on the job. They shall handle the movement of the travelling public and shall do all that is reasonable to expedite that movement. They shall have authority to direct the actions of the construction vehicles as well.

2.5 Contractors or subcontractors supplying flaggers shall have an employee that has been certified as a trainer of flaggers. Individuals doing the flagging shall have been trained by that trainer or have taken an approved flagging course.

2.6 Uniformed officers and flaggers shall be clothed in a suitable and characteristic manner that will readily distinguish them from all other employees.

2.6.1 Uniformed officers shall be attired with regulation duty uniforms, headgear and reflective vests in accordance with MUTCD, and shall wear an exposed badge.

2.6.2 Flaggers shall reflective vests in accordance with MUTCD and their attire shall be distinctive from other workers. Inappropriate attire shall not be allowed.

2.7 Authorities providing uniformed officers or subcontractors supplying flaggers will designate a person as the responsible party to coordinate the traffic control procedures with both the general superintendent and the Engineer. This person will be responsible to collect and report the time of actual traffic control to all interested parties.

2.8 Personnel Requirements and Authority. Flaggers shall possess the following qualifications: at least average intelligence and alertness, good sight and hearing, courteous but firm manner, neat and presentable appearance, pleasing personality and a sense of responsibility. They shall have been given specific instructions as to their duties and responsibilities, both to the public and to their fellow workers on the job. They shall have authority to direct the movement of construction vehicles as well as vehicles of the traveling public, and shall do all that is reasonable to expedite that movement.

2.8.1 Uniformed officers shall have police powers granted by the authorities having legal jurisdiction in the work area.

2.8.2 Uniformed personnel from commercial security firms shall be regarded as flaggers.

2.8.3 For night operations, high-intensity reflectorized clothing and the use of lighting shall be required, as stated in the MUTCD.

Equipment

3.1 Traffic paddles and flagger equipment shall conform to those described in the MUTCD

Method of Measurement

4.1 Uniformed Officers and Flaggers will be measured by the actual number of hours worked.

4.2 No additional compensation will be due the Contractor under this item for flaggers supplied by the Contractor from his work force.

4.3 The allowance amount established in the proposal will not limit the Engineer in the value of work ordered performed under this item.

Basis of Payment

5.1 Payment for uniformed officers and flaggers hired by the Contractor from the Police Department or flagging company shall be based on receipted bills computed on an hourly basis for services rendered to which no mark-up factor will be added.

5.1.1 Appropriate time records shall be submitted for documentation. Records shall be signed by the employees, the Contractor's representative.

5.2 When authorized by the Engineer, vehicle useage charges will be paid for when a Police or Sheriff's department vehicle is supplied by the uniformed officer hired.

5.3 The Bidder's attention is called to the dollar amount inserted in the proposal under this item, which dollar amount is the amount the City has established to pay for uniformed officers and flaggers. This figure (1) must not be altered by the Bidder on his proposal and (2), must be included to obtain the grand total of the bid.

5.3.1 Payment of the amount included in the proposal will not be on a lump sum basis. Only the value of work ordered will be paid for.

Pay Items and Units, Section 618 -- Uniformed Officers And Flaggers:

618.1	Uniformed Officers and Flaggers	Dollar

SECTION 619-- MAINTENANCE OF TRAFFIC

Description

1.1 This work shall consist of providing and maintaining safe and passable traffic accommodations for public travel. This shall include, preventing dust nuisance, furnishing, erecting and maintaining construction signs, barricades, delineators, lights, flashers and other warning devices and the application of short term pavement markings and the removal of inappropriate pavement markings as shown or as ordered.

1.2 When the proposal contains a pay item for portable changeable message signs (PCMS), a list showing the locations of the PCMS and the messages to be displayed will be given.

Materials

2.1 Construction Signs.

2.1.1 Base material for permanent construction signs shall be weather-proof, rigid substrate specifically manufactured for highway signing and meet the retroreflective sheeting application requirements of the sheeting manufacturer.

2.1.2 Sign Blanks shall be prepared in accordance with current practice as recommended by the sheeting manufacturer.

2.1.3 Retroreflective sheeting for traffic control devices shall conform to AASHTO M 268 (ASTM D 4956), Type III Retroreflective Sheeting as a minimum.

2.1.4 Traffic Control devices (plastic or rubber cones, tubular markers, flexible delineators, and plastic drums, etc.) shall have Type III or higher sheeting.

2.1.5 Application of Sign Text. The sign text shall consist of the letters, digits and symbols either applied stick-on, or silkscreened, to conform with the dimensions and designs indicated on the plans for the various types of signs. The materials and methods shall be in accordance with standard commercial processes as approved.

2.1.5.1 Symbols, legend and background shall conform with the plans or the MUTCD.

2.1.6 Supports, posts and easels shall be as shown on the plans. Posts other than those shown shall be approved by the Engineer prior to their installation, and shall conform to the current AASHTO "Standard Specifications for Structural Supports for Highway Signs, Luminaires, and Traffic Signals."

2.1.7 Hardware required to attach signs to supports shall be such that no staining or discoloration from exposure occurs on the face of the sign.

2.2 Barricades, delineators and other traffic control devices shall be as shown on the plans or ordered.

2.3 Hazard markers shall be as shown on the plans or ordered.

2.4 Lighting Devices shall conform to the requirements of Section 6E of the MUTCD except as modified on the plans.

2.5 Portable changeable message sign (PCM) shall be capable of up to three lines of display with eight characters per line. Characters shall be a minimum of 18 in. high.

2.6 Temporary Pavement Marking Materials.

2.6.1 Reflectorized traffic marking paint and beads shall conform to the requirements of Section 708.

2.6.2 Reflectorized traffic marking tape shall conform to the requirements of Section 632.

2.6.3 Raised pavement markers shall be retroreflective markers **as approved by the Department.**

2.7 Calcium Chloride shall conform to AASHTO M 144, Type S, Grade 3. Other dust pallative material may be submitted to the Engineer for approval.

Construction Requirements

3.1 Maintenance of Traffic.

3.1.1 Whenever the street is open to public traffic through any part of the project, the Contractor shall provide and maintain sufficient surface for at least one lane traffic, and two lanes whenever possible. One lane traffic shall be controlled as directed by the use of uniformed officers, flaggers (when no officers are available)or radio. Control of one lane traffic will be required for 24 hours each day, unless otherwise permitted.

3.1.1.1 When directed, persons regulating traffic shall be equipped with an approved two-way radio system. An approved radio system shall be dependable, allowing clear communication at all times between the operators. Operators shall be given sufficient instruction and training to be effective. Safety precautions shall be taken to avoid any accidents during blasting operations due to the use of radios.

3.1.2 Whenever heavy equipment is operating adjacent to a roadway open to public travel, the Contractor shall provide adequate traffic control to keep traffic lanes open and safe for such travel.

3.1.3 The Contractor shall also provide and maintain in a safe and passable condition such temporary by-passes, accesses to adjacent properties and approaches to intersecting streets.

3.1.4 When ordered, temporary approaches and portions of the existing street surface between the beginning and end of the project shall be paved.

3.1.5 Guide, regulatory and warning signs showing route designations, directions and other information either existing or supplied by the City, shall be maintained at appropriate locations for the use of the travelling public during the construction period. Signs which are not applicable to construction conditions shall be covered, removed or relocated. Signs that are removed or relocated, will be retained and re-erected by the Contractor. The Engineer shall be notified when any sign is removed or relocated.

3.1.6 Temporary guard rail when required, shall be furnished, erected and maintained under this item unless a separate item is included in the proposal.

3.1.7 Dust laying shall be performed in an approved manner generally by the use of water and shall be continued whenever necessary even though all other work on the project is suspended.

3.1.7.1 The Engineer shall determine when the use of Calcium Chloride is warranted to control dust nuisance. It shall be uniformly applied at a rate sufficient to control dust.

3.1.8 Before any suspension of the work, the Contractor shall make passable and shall open to traffic, such portions of the project and temporary roadways or portions thereof as may be agreed upon between the Contractor and the Engineer.

3.1.9 When construction is acceptable to the engineer, to the extent that traffic is maintained on a paved surface, the City will assume the maintenance of the road without cost to the Contractor during the time the work is suspended. The City will provide for snow removal for the needs of normal traffic.

3.1.10 When work is resumed after any suspension, the Contractor shall replace or renew any work or materials lost or damaged because of such temporary use on the project.

3.1.11 If proper maintenance of traffic and proper provisions for traffic control are not being provided by the Contractor, the City may assume maintenance of the road and deduct the cost from any money due or to become due under the Contract.

3.1.12 Any work performed by the City either when construction operations are taking place or during periods of suspension, shall not invalidate any of the provisions of the contract.

3.2 Construction Signs and Warning Devices.

3.2.1 The plans may contain a list showing the permanent signs and warning devices, however, the Contractor's method of operation will determine the actual needs for operational signs and warning devices. Operation signs and warning devices shall be provided in sufficient type, quantity and placement configuration to meet the Standards and the MUTCD.

3.2.2 All construction signs, barricades and warning devices supplied for the project, shall be covered with a minimum of Type III sheathing, free from scratches, abrasions, chipping or

any other damages that may at the discretion of the Engineer, be such as to render them unsatisfactory for use or to reduce reflectivity to less than 70% of new material.

3.2.2.1 All permanent construction signs shall be furnished in new or similar condition.

3.2.2.2 At anytime during the life of the contract, at the discretion of the Engineer any sign, barricade or warning device that is damaged, disfigured or found to be in unserviceable condition may be required to be replaced.

3.2.2.3 Signs not specifically mentioned in the specifications or on the plans, shall be designed, constructed, placed, operated and maintained in accordance with the requirements of the MUTCD or as ordered.

3.2.3 Construction signs shall be erected at the locations indicated on the plans or as ordered. The posts shall be plumb. The signs shall be installed on posts, barricades or easels so that the text will be horizontal. Signs on easels or barricades shall not be tilted more than 30 degrees from the vertical.

3.2.4 Barricades and delineators shall be erected wherever necessary for the protection of public travel. Such hazards as pits and open trenches, drop-offs, exceptionally rough stretches of the traveled way and all obstructions of any kind, including equipment parked on the roadway shall be barricaded in an approved manner.

3.2.5 Operational signs and channelizing devices shall not be setup until weather conditions will allow adequate visibility.

3.2.6 Lighting devices required or ordered shall be provided to delineate hazards from sunset to sunrise. The type and number of lights and flashing beacons shall conform to the plans and/or the MUTCD.

3.2.7 All signs, barricades, guard rail, delineators, lighting devices and other materials furnished by the Contractor, shall remain the property of the Contractor unless otherwise specified.

3.3 Temporary Pavement Marking Tape.

3.3.1 The Contractor shall install temporary tape to delineate the traveled way. Tape required shall be readily available to the project at the proper time and shall conform to 2.6. Type to be used shall be shown on the plans or as ordered by the Engineer.

3.3.2 Installation. The use of tape in construction work zones shall be placed in accordance with the Traffic Manual and as follows:

3.3.2.1 Tape shall be applied to clean, dry surfaces in accordance with the manufacturer's recommendations or a method approved by the Engineer.

3.3.2.2 At the end of each day's work, tape shall be in-place as required on each paving lift that is open to normal traffic flow. The tape shall be maintained by the Contractor.

3.3.2.3 The Contractor shall be required to remove or cover the tape after it has served its purpose. The use of heat, solvents, grinding or blast treatment shall not be employed in the removal of temporary tape.

3.4 Temporary Painted Pavement Markings. The Engineer may elect to apply temporary painted pavement markings. In this event, the Contractor shall cooperate with the Engineer in the installation and shall protect the markings.

3.5 Obliteration of Pavement Markings. Removal of existing pavement marking as required shall conform to 632.3.5.

Method of Measurement

4.1 Maintenance of traffic will be measured as a unit. Work shall include necessary work for dust laying, construction signs and warning devices, temporary pavement paint and tape markings, and any obliteration of pavement markings will each. Signs when shown on the plans represent estimated requirements based on anticipated operations.

4.2 Portable changeable message sign will be measured as a unit. A unit shall consist of the sign as described, the trailer, fuel and all necessary moves as approved.

4.2.1 Portable changeable message sign (unit/week) will be measured as a unit week. A week shall consist of seven consecutive days beginning when the item is first used on the project. The number of units required each week will be specified in the Traffic Control Plan or as approved.

Basis of Payment

5.1 The accepted quantities of maintenance of traffic will be paid for at the contract lump sum price. Payment will be made periodically based on the anticipated construction period.

5.2 Installation and maintenance of construction signs and warning devices shall be subsidiary to the item.

5.2.1 If new signs or devices are purchased and delivered to the project site, an initial payment will be made based on a paid invoice up to 50 percent of the amount bid. Subsequent payments will be made periodically based on the anticipated construction period.

5.2.2 Replacement of any sign, barricade or warning device required by 619.3.2.3 will be subsidiary.

5.2.3 The material cost of permanent construction signs ordered but not included in the listing on the contract plans will be paid for as provided in 108.04. The labor and equipment cost for installation will be subsidiary.

5.3 Bituminous material placed or applied under 3.1.4 and 3.1.10, will be paid for as provided for under Section 403.

5.4 Costs for uniformed officers or flagmen shall be paid for as provided under Section 618.

5.5 The material cost of calcium chloride will be paid for as provided for under Section 620. The labor and equipment necessary for material application shall be subsidiary.

5.6 Short term pavement markings required will be be subsidiary to the item regardless of color and includes repair, and replacement as required.

5.7 When no separate pay item for obliterating existing pavement markings is provided, the work shall be subsidiary.

5.8 Work ordered under 3.1.10 that resulted from Department maintenance operations will be paid as provided in 108.04.

5.9 When no provision for Maintenance of Traffic is included in the contract, the work will be subsidiary.

5.10 The accepted quantity of portable changeable message signs will be paid for at the Contract unit price complete, for each unit used. Payment will be made periodically based on the anticipated need for each unit.

5.10.1 The accepted quantity of portable changeable message sign (unit\week) will be paid for at the Contract unit price complete. Payment will be made based on the use for each unit, whether used once or multiple times during a week.

Pay Items and Units, Section 619-- Maintenance Of Traffic:

619.1	Maintenance of Traffic	Lump Sum
619.25	Portable Changeable Message Sign	Unit
619.253	Portable Changeable Message Sign	Unit\Week

SECTION 620 -- CALCIUM CHLORIDE

Description

1.1 This work shall consist of furnishing and applying flake calcium chloride as ordered at such locations as the Engineer may direct for the purpose of reducing the dust nuisance to the travelling public or adjacent residences.

Materials

2.1 Calcium Chloride shall conform to AASHTO M144, Type S, Grade 3 except the requirements for "total alkali chlorides" and other impurities shall not apply.

Construction Requirements

3.1 Calcium chloride shall be uniformly applied at the rate ordered.

3.2 Calcium chloride will be ordered when the Engineer determines that its use is warranted to control dust. Application of calcium chloride will ordinarily be ordered to control dust on sections of construction open to the public during holidays and weekends only. It may be ordered for detours at anytime.

Method of Measurement

4.1 Calcium chloride will be measured by the ton in accordance with 108.01 on the basis of delivery slips forwarded to the Engineer but not to exceed the rate ordered. Measurements will be made to the nearest 0.01 of a ton.

Basis of Payment

5.1 The accepted quantity of calcium chloride will be paid for at the contract unit price per ton complete in place.

Pay Items and Units, Section 620 -- Calcium Chloride:

620	Calcium Chloride	Ton

SECTION 622 -- BOUNDS

Description

1.1 This work shall consist of furnishing and erecting bounds in accordance with the plans and at the required locations.

Materials

2.1 Concrete Bounds shall be as shown on the plans with concrete conforming to Section 520 and reinforcing steel conforming to 544.2.3

2.2 Stone Bounds shall be magnetized, and shall be cut from hard and durable granite and shall be free from seams which would impair their structural integrity, solid quartz or feldspar veins will not be cause for rejection. Dimensions shall be 4 inches to 8 inches square by not less than 4 feet - 0 inches in length. The top of the bound shall be roughly perpendicular to the length of the stone and shall have a 1/2 inch drill hole at least 1/2 inch deep near or at the center.

2.3 Backfill shall conform to Section 209.

Construction Requirements

3.1 Unless otherwise specified a 4 inch square stone bound shall be used.

3.2 Bounds shall be set as ordered on the right-of-way lines at the beginning and ends of curves, beginning and ends of spirals, angle points and on tangents with a maximum distance between bounds of 1,000 feet.

3.3 The exact location for each bound will be established by a land surveyor licensed by the State of New Hampshire.

3.4 The excavation shall be made to a sufficient depth to allow the bound to protrude 4 inches above the natural ground surface if in mowing land, 6 inches if in land not under cultivation or 12 inches if in woodland. Bounds in the roadway slope shall be set to protrude not more than 6 inches on the low side. Backfill shall be thoroughly tamped in place. Bounds set in mowing land shall be encircled by a mound of earth at least 4 feet in diameter and flush with the top of the bound at the center.

3.5 Unless otherwise ordered when rock is encountered, the bounds cut off if necessary, shall be firmly bonded to the rock.

3.6 When a tree or heavy root is encountered in setting bound, a steel pin at least 30 inches long and 3/4 inch in diameter shall be driven when ordered. The bound shall then be set at the nearest practical location as directed.

3.7 Resetting.

3.7.1 Bounds to be reset shall be removed and reset without causing damage to the bounds. Location of the bound shall be recorded by a licensed land surveyor before removal, and the bound shall be reset in accordance with 3.3 and 3.4.

Method of Measurement

4.1 Concrete bounds and stone bounds will each be measured by the number of types installed or reset.

Basis of Payment

5.1 The accepted quantities of concrete bounds, stone bounds and bounds reset, will be paid for at the contract unit price per each for the kind specified complete in place.

5.1.1 Ordered excavation of solid rock for bounds to a limit of 1 foot from the sides of the bound, will be paid for as Extra Work in accordance with 108.04.

5.1.2 No extra allowance will be made for handling of bounds to be reset or for any excavation required to remove bounds from their original sites.

5.1.3 Pins used as specified in 3.6 will be subsidiary.

Pay Items and Units, Section 622 -- Bounds:

622.2	Concrete Bounds	Each
622.4	Stone Bounds	Each
622.52	Resetting Bounds	Each

SECTION 625 – LIGHT POLE BASES

Description

1.1 This item shall consist of concrete light pole bases constructed at the locations and of the design shown on the plans or as ordered.

Materials

2.1 Concrete shall be Class B conforming to Section 520

2.2 Reinforcing Steel shall conform to Section 544

2.3 Granular backfill shall be gravel conforming to 209.2.1.4.2.

2.4 Electrical Conduit will conform to Section 614

Construction Requirements

3.1 Light pole bases shall be of the size and type as specified on the plans.

3.2 Light pole bases shall be either precast or cast in place.

3.2.1 When precast bases are used, the hole shall be dug wide enough to allow for proper placement and compaction of the required backfill. The bases shall be placed on a prepared surface which shall provide a firm foundation. Where rock or unstable soil is encountered, the material shall be excavated 6 in. below the bottom of the base, and granular backfill placed and compacted in place of the excavated material.

3.2.2 When bases are to be cast in place, the holes shall be dug wide enough to allow the placement of concrete of the required diameter. Except when solid rock is encountered, the excavation shall be made to the full depth required on the plans. When solid rock is encountered, the bottom of the hole shall be at least 3 ft. from the top of the base and the concrete shall be firmly bonded to the rock with approved anchor rods. Reinforcing steel shall be placed and spaced appropriately per the plans. Sufficient excavation shall be made to allow the proper placement of the forms and the proper placement and compaction of the required backfill.

3.3 Light pole anchor bolts shall be integrally cast into the concrete base at the correct spacing and bolt circle diameter for the light fixture to be installed. This shall apply whether precast of cast in place base. Installation of anchor bolts after placement of concrete base will not be allowed.

3.4 All light pole bases shall have electrical conduit of the size, type and number required integrally cast into the base for underground electrical connections to be made. Placement of conduit on outside of concrete base for connection will not be accepted.

3.5 After the precast bases have been set, or after the removal of the forms for cast-in-place bases, granular backfill shall be placed in the entire space outside the bases, to the level of the finished grade unless otherwise ordered. Backfill shall be made in layers not greater than 6 in., with each layer thoroughly compacted.

Method of Measurement

4.1 Light pole bases will be measured by the number of units installed.

4.1.1 When more than 3 ft. of conduit, measured horizontally, is required to be installed from the center of the base, the first 3 ft. will be subsidiary.

Basis of Payment

5.1 The accepted quantities of light pole bases of the type required will be paid for at the Contract unit price for each complete in place.

5.1.1 There will be no separate payment for excavation and granular backfill.

5.1.2 Installation of needed steel reinforcement shall be subsidiary.

5.1.3 There will be no separate payment for electrical conduit noted in 3.4

5.1.4 Installation of anchor bolts in bases per 3.3 shall be subsidiary.

Pay Items and Units, Section 625 – Light Pole Bases:

625.1	Concrete Light Pole Bases	Each

SECTION 628 -- SAWED PAVEMENT

Description

1.1 This work shall consist of sawing concrete pavement, bituminous concrete pavement or both where concrete is overlaid with bituminous pavement, as shown on the plans or as ordered.

Construction Requirements

3.1 Concrete pavement or bituminous concrete pavement to be sawed shall be accurately marked before sawing.

3.2 The equipment used to saw concrete or bituminous pavement shall be capable of sawing the pavement as shown on the plans or as ordered and shall produce a substantially vertical and sound face without deformation of the adjacent pavement. The use of cutting wheels, pavement breakers, etc., which deform the pavement or leave an unsound face, will not be permitted.

3.3 Contraction joints to be cut in concrete pavement shall be cut to the width and depth as shown on the plans and filled with the type of filler shown on the plans.

3.4 Concrete pavement or bituminous concrete pavement to be sawed in connection with laying pipes, roadway excavation, constructing curb and the like, shall be of sufficient depth to permit breaking the pavement at the cut.

3.4.1 Where the pavement is found to consist of an overlay of bituminous concrete pavement above a concrete slab, the cut shall be increased enough to score the underlying concrete so that the concrete may be broken in a reasonably uniform manner.

Method of Measurement

4.1 Sawed pavement of the type specified will be measured by the linear foot.

Basis of Payment

5.1 The accepted quantity of sawed pavement will be paid for at the contract unit price per linear foot.

5.1.1 No separate payment will be made for filler.

5.1.2 Saw cutting in connection with Section 403 to create a smooth transverse construction joint in a prior placed asphalt mat will not be paid for under this item.

5.2 Payment will be made under 628.3 only when bituminous concrete pavement and concrete pavement are sawed one above the other.

Pay Items and Units, Section 628 -- Sawed Pavement:

628.1	Sawed Concrete Pavement	Linear Foot
628.2	Sawed Bituminous Concrete Pavement	Linear Foot
628.3	Sawed Pavement	Linear Foot

SECTION 629 -- TESTING OF MATERIALS

Description

1.1 The Contractor shall employ an independent, qualified testing laboratory approved by the Engineer for conducting all required initial tests of concrete, trench backfill and embankment compaction and other like materials as specified and directed by the Engineer. Test results and laboratory recommendations shall immediately be made available to the Engineer. Three (3) certified copies of the test results bearing the name of the testing company, type of test, test number, date and location test was conducted, are to be presented to the Engineer promptly enabling the Engineer to make his determination of the acceptability or unacceptability of the material to meet these specifications.

1.2 All additional tests necessitated by the failure of initial tests as determined by the Engineer shall be conducted as directed by the Engineer. The Contractor shall take immediate corrective measures as suggested by the testing laboratory and/or directed by the Engineer to make the materials meet or exceed these specifications.

Construction Requirements

3.1 Concrete Testing.

3.1.1 All concrete to be used in the work shall be subject to testing to determine whether it conforms to the requirements of the specifications. The methods of testing shall conform to the appropriate specification but the place, time frequency and method of sampling, will be determined by the Engineer in accordance with the particular conditions of this project.

3.1.2 Concrete shall be of such consistency that it can be worked readily into all parts of the forms and around embedded work without permitting the materials to segregate or free water to collect on the surface. Consistency shall be measured by the ASTM Standard Method of Test for Slump of Portland Cement Concrete Designation C143. The consistency of concrete shall conform to the following slump requirements:

a)	Pavements & slabs on ground,	Normal 1-2	Maximum 3
b)	Massive reinforced sections,	Normal 2-3	Maximum 4
c)	Other reinforced walls & footings,	Normal 3-4	Maximum 5

Overly wet mixes with slumps exceeding those given above, are not acceptable and will be rejected by the Engineer.

3.1.3 Field tests of concrete for compressive strength shall be taken, cured and tested by the approved testing laboratory as directed by the Engineer. A minimum of four (4) specimens shall be made for each test. One specimen shall be broken at 7 days, one at 14 days, the other at 28 days. Specimens shall be made and tested in accordance with ASTM Specification C39 and C31. Where there is any question as to the quality of the concrete in the structures, the Engineer will require the Contractor at his expense, to have tests made by

an approved independent testing and inspection laboratory. Such tests shall be in accordance with the "Standard Methods of Securing, Preparing and Testing Specimens of Hardened Concrete for Compressive and Flexural Strengths" (ASTM Designation C42) or Sections 202 and 203 of the current A.C.I. Building Code for Reinforced Concrete (A.C.I.318) as may be required. The criteria for acceptability of the concrete under the latter, shall be that given therein. Concrete failing to meet the specification requirements shall be removed and replaced at the Contractor's expense.

3.1.4 Unless otherwise noted in these specifications or on the contract plans, all concrete masonry shall contain air-entrained cement. The average resulting air content in field mixtures shall be five (5%) percent when measured by means of an Acme Air Meter or an approved equal in conformity with the ASTM Standard Method of Test for air content of freshly mixed concrete by the "Pressure Method, Designation C231". Such tests shall be performed by the approved testing laboratory in the presence of and as directed by the Engineer. Any concrete for which the individual air content is less than 3.5 or greater than 6.5 percent, will be rejected.

3.2 Trench Backfill, Roadway Bases & Embankment Compaction Testing.

3.2.1 The Contractor shall provide samples of each backfill material from the proposed sources of supply. The Contractor shall allow sufficient time for testing and evaluation of results before material is needed. Samples from alternate sources shall be submitted if required. The Engineer will be the sole and final judge of the suitability of all materials.

3.2.2 Materials in question pending tests results shall not be used. Any materials rejected shall be removed and replaced with new acceptable materials whether in stockpiles or in place.

3.2.3 Compaction shall continue until the unit dry weight of the fill reaches a value of not less than the specified maximum unit dry weight attained in a laboratory compaction test performed under the specifications of ASTM D1557-64T, Method "A" (Backfill material of a stony nature shall be tested under Method "C" or "D" of the same ASTM Designation) or other approved ASTM or AASHTO Specifications. Such tests shall also be used for establishing the optimum moisture content of the material. The in-place dry unit weight of the compacted material shall be determined by methods specified under ASTM "D" 1556-58T or other approved ASTM of AASHTO Specifications. The in-place compaction test to be consistent with the approved laboratory compaction test.

3.2.4 At least one laboratory compaction test shall be performed for each distinctive type of material to be incorporated. These laboratory tests to be taken at the suggestion of the testing laboratory and/or as directed by the Engineer. A minimum of two (2) in-place moisture-density determinations shall be made for each 500 linear feet of trench backfilled. The actual number of compaction tests, their locations and depth shall be determined by the Engineer. The percentage compaction of the fill at the point of the in-place moisture-density test shall be computed as follows:

Percentage compaction = DF x 100 DL
in which:

DF= Unit dry weight in lb ./cubic feet of sample in field moisture-density determinations.

DL= Maximum unit dry weight in lb./cubic feet obtained in the specified laboratory compaction test on a sample of the same type of material.

3.2.5 If the percentage compaction at any point is found to be unacceptable, additional compaction with or without modification of the field moisture content as directed shall be performed and additional moisture-density determinations made. This procedure shall be repeated until satisfactory compaction is obtained.

3.2.6 The Contractor will cooperate with the testing laboratory in obtaining field samples of in-place materials after compaction. Also incidental field labor and equipment necessary to dig and backfill test holes shall be furnished by the Contractor.

Method of Measurement

4.1 Work performed under this Section will be paid for in the same manner as extra work. The dollar amount established in the proposal will not limit the Engineer in the value of work ordered performed under this item.

4.2 The Bidder's attention is called to the dollar amount inserted in the proposal under this item, which price is the allowance the City has established to pay for testing of Materials. This figure (1) must not be altered by the Bidder on his proposal and (2), must be included to obtain the grand total of the bid.

Basis of Payment.

5.1 All payment for initial testing of concrete, trench backfill, roadway bases and embankment compaction and other like materials as specified and directed by the Engineer will be made by the Owner to the Contractor based on and in the amount of submitted invoices from the testing firm. The Contractor shall not be entitled to any mark-up on the submitted invoices.

5.2 All additional tests necessitated by the failure of initial tests as determined by the Engineer shall be conducted as directed by the Engineer and all costs incurred from these additional tests shall be borne by the Contractor.

5.3 All work performed by the Contractor in connection with this Section shall be considered incidental to other contract items bid.

Pay Items and Units, Section 629 -- Testing Of Materials:

629	Testing of Materials	Dollar

SECTION 632 -- REFLECTORIZED PAVEMENT MARKINGS

Description

1.1 This work shall consist of furnishing and placing white or yellow reflectorized paint pavement markings, preformed retroreflective pavement markings, reflectorized thermoplastic pavement markings, and temporary raised plastic pavement markers at the locations shown on the plans or as directed.

Materials

2.1 Paint shall conform to Section 708.

2.2 Glass beads for traffic paints shall conform to AASHTO M 247 and shall be Type 1 with moisture resistant coating.

2.3 Temporary Tape. Retroreflective preformed pavement marking tape for limited service life shall conform to ASTM D 4592 Type I (Removable). Type I tapes should be used in areas that require the tape to be removed in the near future. Type I tape shall have a minimum skid resistance of 45 BPN.

2.4 Preformed thermoplastic. Preformed thermoplastic material shall be composed of a resin resistant to degradation by motor fuels, lubricants etc. In conjunction with aggregates, pigments, binders, and glass beads which have been factory produced as a finished product. The thermoplastic material shall conform to AASHTO M249 with the exception of the relevant differences due to the material being supplied n a preformed state such as during time and flowability tests.

2.5 Preformed thermoplastic material shall have factory applied surface beads in addition to the intermixed beads at a rate of 10 pounds per 100 square feet of markings. It also shall contain a minimum of thirty percent (30%) intermixed graded glass beads by weight.

2.5.1 The surface, with properly applied and embedded surface beads, shall provide a minimum resistance value of 45 BPN when tested according to ASTM E 303.

2.5.2 The material shall be applied at a thickness of 80 mils.

2.6 Extruded Thermoplastic Material

2.6.1 Material shall be homogeneously composed of pigment, filler, resins and glass beads. The pre-mix glass beads shall be uniformly distributed throughout the entire thickness of material. The material, when applied in accordance with the manufacturer's recommended procedures, shall be capable of resisting deformation by traffic. The material shall be tested in accordance with AASHTO T250 requirements.

2.6.2 The binder shall be either alkyd or hydrocarbon conforming to AASHTO M249. The binder shall be either alkyd or hydrocarbon conforming to AASHTO M249.

2.6.3 Binder shall consist of a mixture of synthetic resins, at least one of which is solid at room temperature, and high boiling point plasticizers. At least 1/3 of the binder composition shall be solid maleic-modified glycerol ester resin and shall be no less than 10 percent by weight of the entire material formulation.

2.6.4 Thermoplastic material shall not deteriorate by contact with sodium chloride, calcium chloride or other chemicals used to prevent roadway ice. The material shall also not deteriorate because of the oil content of pavement materials or from oil droppings or other effects of traffic.

2.6.5 Material, when formed into pavement markings, shall be readily renewable by placing an overlay of the same material directly over the old markings. The new material shall bond itself to the old markings in such a manner that no splitting or separation takes place.

2.7 Temporary Raised Plastic Pavement Markers (RPMs)

2.7.1 Markers shall be made from impact-resistant polyurethane plastic.

2.7.2 The marker's approximate dimensions are 4 inch width by 2 inch height. The marker shall two micro-prismatic reflective faces (one on each side). Micro-prismatic reflective faces approximate dimension 1/4 inch x 4 inches.

2.7.3 The base of the marker shall be fitted with a butyl rubber pad with a pressure sensitive adhesive capability of adhering to bituminous asphalt surfaces.

2.7.4 Spacing Requirements. Markers shall be placed as follows. Spacing for non-typical markings, shall be per the direction of the Engineer.

2.7.4.1 Centerlines – Yellow, 40 feet apart, placed in pairs

2.7.4.2 Lane lines, broken - White, 40 feet apart

2.7.4.3 Channelization/Turn Lanes- White, 20 feet apart, but not less than three evenly spaced RPMs on each lane line

2.7.4.4 Stop bars- If allowed, white, approximately 3 feet apart placed along the stop bar length. Reflectorized surface facing the direction of traffic.

Construction Requirements

3.1 General.

3.1.1 All pavement markings of the type specified shall be applied at the locations shown on the plans or as ordered, and shall be in accordance with the Traffic Manual (MUTCD). Traffic control operations in conjunction with placing markings shall conform to Section 619 and the Traffic Control Plan.

3.1.2 Longitudinal lines placed on tangent roadway segments shall be straight and true. Longitudinal lines placed on curves shall be continuous smoothly curved lines consistent with roadway alignment. All pavement markings placed shall meet the tolerance limits shown on the plans.

3.1.3 Broken lines shall consist of 10 foot line segments with 30 foot gaps and shall meet the tolerance limits shown on the plans.

3.1.4 Unless otherwise specified, widths of longitudinal markings shall be as follows:

Table 632- 1 Pavement Marking Line Widths

Line Type	Width (inches)
Centerlines	4
Edge Lines	4
Lane Lines	4
Gore Markings	8
Cross Walks*	6
Parking Lines	4
Stop Bars	12

*- cross walk edge lines only, where required. Line widths for “piano key” style crosswalk shall be per detail.

3.1.5 Newly painted markings shall be protected from traffic until the paint is cured. The method of protection shall not constitute a hazard to the traveling public. Damage to any markings as a result of tracking shall be repaired by the Contractor.

3.1.6 For guidance in marking longitudinal lines, the Engineer will establish base line points at 50 foot intervals on curves and 100 foot intervals on tangent sections throughout the length of pavement to be marked under this section. All other markings shall be applied according to the physical pavement layout provided. The Contractor shall provide at least 7 days notice to the Engineer prior to beginning marking operations to allow for layout.

3.1.7 For resurfacing contracts, the Contractor's attention is directed to the special requirements contained in Section 619.

3.1.8 All clean up and disposal of solvents, residue, and the like shall be the responsibility of the Contractor and shall be performed in accordance with all applicable federal, state and local regulations.

3.2 Retroreflective Pavement Marking Paint.

3.2.1 All equipment used for highway striping shall be specifically designed and manufactured for that purpose by a company experienced in the design and manufacture of such equipment and approved for use. Equipment used for longitudinal lines shall be mounted on a truck having a minimum gross vehicle weight rating of 14,000 lb with a minimum paint tank capacity of 60 gal, and shall have the capability of placing double lines up to 4 in. in width or single lines up to 12 in. in width in one pass. Each paint tank shall be plainly marked in a prominent place with the maximum filled capacity of the tank. Each tank shall have a mixer or aerator capable of combining and maintaining the ingredients of the paint into a thoroughly mixed and uniform mass. The paint shall be applied with an atomizing or airless spray type striping machine having the water base paint at a temperature of 105 ºF maximum in the heat exchanger and 85 – 105 degrees F at the spray nozzle. Paint shall pass through a screen with a maximum opening of 1/8 in. located before the heat exchanger. A valve accessible for sampling shall be located in the paint feed line between the screen and the heat exchanger. The striping machine shall be equipped with an automatic paint stripe controller having skip-line capability to place broken lines in accordance with 3.1.3. A gauge reading paint temperature shall be mounted and conveniently displayed on the equipment. The equipment shall include a mechanical, glass-bead dispenser mounted not more than 12 in. behind the paint dispenser. All equipment shall be kept in good operating condition.

3.2.1.1 Where striping with a truck mounted unit is deemed impractical, paint may be applied with a motorized paint cart unit. The engineer shall approve the locations. These locations may include vehicle parking stall lines, painted islands, and lines with tight radii.

3.2.2 Immediately before applying the pavement marking paint to the pavement, the Contractor shall insure the surface is dry and entirely free from dirt, sand, grease, oil, or other foreign matter.

3.2.3 The surface temperature of the pavement shall be a minimum of 40 degrees F.

3.2.4 Paint shall be applied to a thickness of 20 mil wet

3.2.5 Glass beads shall be evenly applied through the entire paint thickness at a rate of 6 pounds to each gallon of paint. Glass beads shall be applied by pressurized methods for fast-dry paint and by pressurized or mechanical drop methods for regular-dry paint.

3.2.5.1 Unless otherwised directed by the Engineer, glass beads may be omitted for temporary striping.

3.2.6 All clean up and disposal of solvents, residue, and the like shall be the responsibility of the Contractor and shall be performed in accordance with all applicable federal, state, and local regulations.

3.3 Preformed Retroreflective Pavement Marking Tape.

3.3.1 Preformed retroreflective pavement marking tape shall be applied at locations shown on the plans by mechanical or manual methods. Mechanical applications shall be suitable for all markings. Manual applications shall normally be used for transverse lines, symbols and legends. The manufacturer shall provide technical assistance for equipment operation and maintenance, and product applications.

3.3.2 Preformed retroreflective pavement marking tape shall be stored and applied as directed by the manufacturer. All markings applied after September 1 of any year shall be applied using the inlay method, unless specifically permitted by the Engineer. Prior to September 1, application by either the inlay or overlay method will be permitted, unless otherwise specified. When the inlay method is specified, or chosen by the Contractor, paving and marking operations shall be coordinated to meet the manufacturer's recommendations.

3.3.2.1 For the inlay method, the pavement markings shall be embedded in the pavement surface with a conventional steel wheel roller. The surface temperature of the pavement shall be within the range specified by the manufacturer and shall not deform or discolor the markings.

3.3.2.2 When applying pavement markings by the overlay method, the pavement surface shall be clean, dry and above the minimum temperature as specified by the manufacturer. The surface shall be broomed clean and all dust shall be removed using compressed air. When required by the manufacturer, a coat of primer/adhesive activator shall be applied.

3.3.3 The Contractor shall provide a copy of the manufacturer's storage and application recommendation to the Engineer upon delivery of the material to the project.

3.3.4 The required quantity of preformed retroreflective pavement marking tape shall be available at the project prior to the start of applicable pavement operations.

3.3.4.1 Material shall be delivered to the project in original containers. Each container shall be clearly marked to indicate the color of the material, a specific description of the contents, and the process batch or lot numbers.

3.3.4.2 Material found to be discolored or damaged in any way or material manufactured more than one year prior to installation shall not be used.

3.4 Retroreflective Thermoplastic Pavement Marking.

3.4.1 Thermoplastic pavement markings shall be applied to the road surface in a molten state by screed/extrusion with a surface application of glass beads.

3.4.1.1 All equipment used to apply thermoplastic pavement markings shall be constructed to provide continuous uniform heating at temperatures exceeding 400º F during mixing and agitation of the material. Equipment used for longitudinal lines shall be mounted on a truck having a minimum gross vehicle weight of 14,000 lb, and shall have the capability of placing double lines up to 4 inches in width or single lines up to 12 inches in width in one pass. The equipment shall operate so that all mixing and conveying parts, including the line dispensing device, maintains the material at the required plastic temperature. The use of pans, aprons or similar appliances which the dispenser overruns will not be permitted. The thermoplastic material shall be applied by the screed/extrusion method. The striping machine shall be equipped with an automatic stripe controller having skip-line capability to place broken lines in accordance with 3.1.3, and a glass bead dispenser located immediately behind the material dispenser. All equipment shall be kept in good operating condition.

3.4.1.2 A special kettle shall be provided for uniformly melting and heating the thermoplastic material. The kettle shall be equipped with an automatic thermostat control device and material thermometer for positive temperature control and to prevent overheating or underheating of the material. The heating kettle and application equipment shall meet the requirements of the National Fire Underwriters, the National Fire Protection Association and state and local authorities.

3.4.2 Immediately before applying the thermoplastic to the pavement, the Contractor shall insure the surface is dry and entirely free from dirt, sand, grease, oil, or other matter which would prevent effective adhesion of the thermoplastic material to the pavement.

3.4.2.1 When recommended by the manufacturer of the thermoplastic material, a primer/sealer shall be applied to the pavement surface prior to the application of the thermoplastic material. The primer shall be void of solvent and water prior to the thermoplastic application.

3.4.3 Thermoplastic pavement marking materials shall not be applied when air and/or pavement surface temperatures are below 50º F or when the surface of the pavement contains any evidence of moisture.

3.4.4 Thermoplastic material shall be applied to the pavement at a thickness of 80 mils

3.4.5 Glass beads shall be evenly applied to the surface of the completed marking at a rate of 10 pounds per 100 square feet of markings. Glass beads shall be applied by pressurized or mechanical drop methods.

3.4.6 Preformed Thermoplastic. Preformed thermoplastic pavement markings shall be a resilient white thermoplastic product with uniformly distributed glass beads throughout the entire cross sectional area. The markings shall be resistant to the detrimental effects of motor fuels, lubricants, hydraulic fluids etc. The markings can be used for stop lines, legends,

symbols, and crosswalks, and shall be capable of being affixed to bituminous concrete pavements by the use of the normal heat of a propane torch.

3.4.6.1 The markings shall be capable of conforming to pavement contours, breaks and faults through the action of traffic at normal pavement temperatures. The markings shall have resealing characteristics, such that they are capable of fusing with themselves and previously applied thermoplastic when heated with the torch.

3.4.6.2 The marking must be able to be applied on pavement with a surface temperature down to 40 ºF without any preheating of the pavement to a specific temperature.

3.5 Obliteration of Pavement Markings.

3.5.1 For efficiency and cost considerations, pavement marking obliteration shall be performed with a truck mounted unit where practical.

3.5.2 Pavement marking obliteration shall result in a minimum of pavement scar and shall obliterate all evidence of the existing pavement marking material. Removal may be performed by grinding, sand or water blasting, or other method(s) approved by the Engineer that do not materially damage the pavement surface.

3.5.3 "Painting" over pavement markings with paint, asphalt mixtures or any other material shall be at the discretion of the Engineer.

3.5.4 Removal and disposal of pavement markings including, but not limited to retroreflectorized paint, retroreflective thermoplastic, preformed retroreflective tape and raised pavement markers shall be the responsibility of the Contractor in accordance with all applicable federal, state, and local regulations.

3.6 Temporary Raised Plastic Pavement Markers

3.6.1 Marker used shall be of the same color as the specified permanent marking.

3.6.1.1 Markers shall not be used in lieu of permanent retroreflective pavement markings

3.6.1.2 Markers for stop bars shall only be used if allowed by the Engineer. Temporary stop bars shall be formed with removable preformed pavement marking tape as specified in 2.3.

3.6.2 Markers shall be installed according to the manufacturer's recommendations.

3.6.3 Spacing of markers shall be per MUTCD.

Method of Measurement

4.1 Longitudinal reflectorized pavement markings will be measured by the linear foot, on the surface of the markings, for the type and width specified.

4.1.1 Broken lines will be measured including gaps between line segments.

4.2 Pavement arrows and pavement words of the type specified will be measured by the square foot, to the nearest 0.1 of a square foot.

4.3 Railroad crossing and do not block markings of the type specified will be measured by the square foot, to the nearest 0.1 of a square foot

4.3.1 Do not block border shall be paid for by the linear for the width of line specified.

4.3.2 Transverse lines and stop bars associated with railroad crossing symbols shall be paid for by the linear for the width of line specified.

4.4 Repair work ordered under 3.1.5 will not be measured.

4.5 Obliterate pavement marking lines of the type specified will be measured by the linear foot to the nearest foot of length of marking, with no adjustment for width.

4.5.1 Obliterated pavement marking that are greater than 12 inches in width will be be measured by the square foot, to the nearest 0.1 of a square foot

4.6 Obliterate pavement marking symbols or words of the type specified will be measured by the square foot, to the nearest 0.1 of a square foot

4.7 Temporary raised plastic pavement markers shall be measured in lump sum. This will include all installation removal and replacement as needed.

4.8 Crosswalk markings will be measured by linear foot of surface markings applied at the widths specified.

Basis of Payment

5.1 The accepted quantities of longitudinal reflectorized pavement markings of the type specified will be paid for at the contract unit price per linear foot complete in place.

5.2 The accepted quantities of temporary pavement markings of the type specified will be paid for at the contract unit price per linear foot complete in place.

5.3 The accepted quantities of pavement arrows, and pavement words, of the type specified will be paid at the contract unit price per square foot, complete in place.

5.4 The accepted quantities of railroad crossing markings, and do not block markings of the type specified will be paid at the contract unit price per square foot, complete in place.

5.5 The accepted quantities of transverse and longitudinal lines associated with railroad crossing markings, and do not block markings of the type specified will be paid for at the contract unit price per linear foot complete in place.

5.6 Additional equipment or labor necessary to apply preformed retroreflective pavement marking tape by the inlay method will be subsidiary.

5.7 The accepted quantities of obliterate pavement marking lines will be paid for at the Contract unit price per linear foot. Payment will not be made for the removal of removable pavement marking tape.

5.8 The accepted quantities of obliterate pavement marking lines with widths greater than 12 inches will be paid for at the Contract unit price per square foot. Payment will not be made for the removal of removable pavement marking tape.

5.9 The accepted quantities of obliterate pavement marking symbols or words of the type specified will be paid for at the Contract unit price per square foot. Payment will not be made for the removal of removable pavement marking tape.

5.10 No payment will be made for those units of pavement markings which do not conform to the requirements of this section.

5.11 Accepted quantities of temporary raised plastic pavement markers will be paid at the Contract lump sum price, which will constitute full compensation for all installation, removal and replacement of the markers as needed or directed by the Engineer.

Pay Items and Units, Section 632 -- Reflectorized Pavement Markings:

Item Number

632.	A	B	C	D	Item number
632					Section number
	A				Material
		B			Type of marking
			C	D	Width of line

A	Material	
0	Reflectorized Paint	
1	Reflectorized Paint, Hand Cart Method	
2	Temporary Paint Marking	
3	Retroreflective Thermoplastic	
4	Obliterate Pavement Lines ≤ 12” Wide	Linear Foot
5	Obliterate Pavement Word, Symbol or Line >12”	Square Foot

6	Temporary Raised Plastic Pavement Markers	Lump Sum
7	Preformed Retroreflective Tape, Type I (Removable)	Linear Foot
8	Preformed Thermoplastic	

B	Type of Marking	
1	Single Solid Line	
2	Single Broken Line	
3	Double Solid Line	
4	Double Broken Line	
5	Double Line (Solid with Broken)	
6	Arrow, Word or Symbol	Square Foot

C	D	Width of Line	
0	4	4 inch line	Linear Foot
0	6	6 inch line	Linear Foot
0	8	8 inch line	Linear Foot
1	2	12 inch line	Linear Foot
1	8	18 inch line	Linear Foot
2	4	24 inch line	Linear Foot

Examples:

632.0104	Reflectorized Paint, 4" Solid Line
632.1104	Reflectorized Paint, Cart Method, 4" Solid Line
632.3112	Retroreflective Thermoplastic, 12” Solid Line
632.36	Retroreflective Thermoplastic, Arrow, Word or Symbol
632.6	Temporary Raised Plastic Pavement Markers

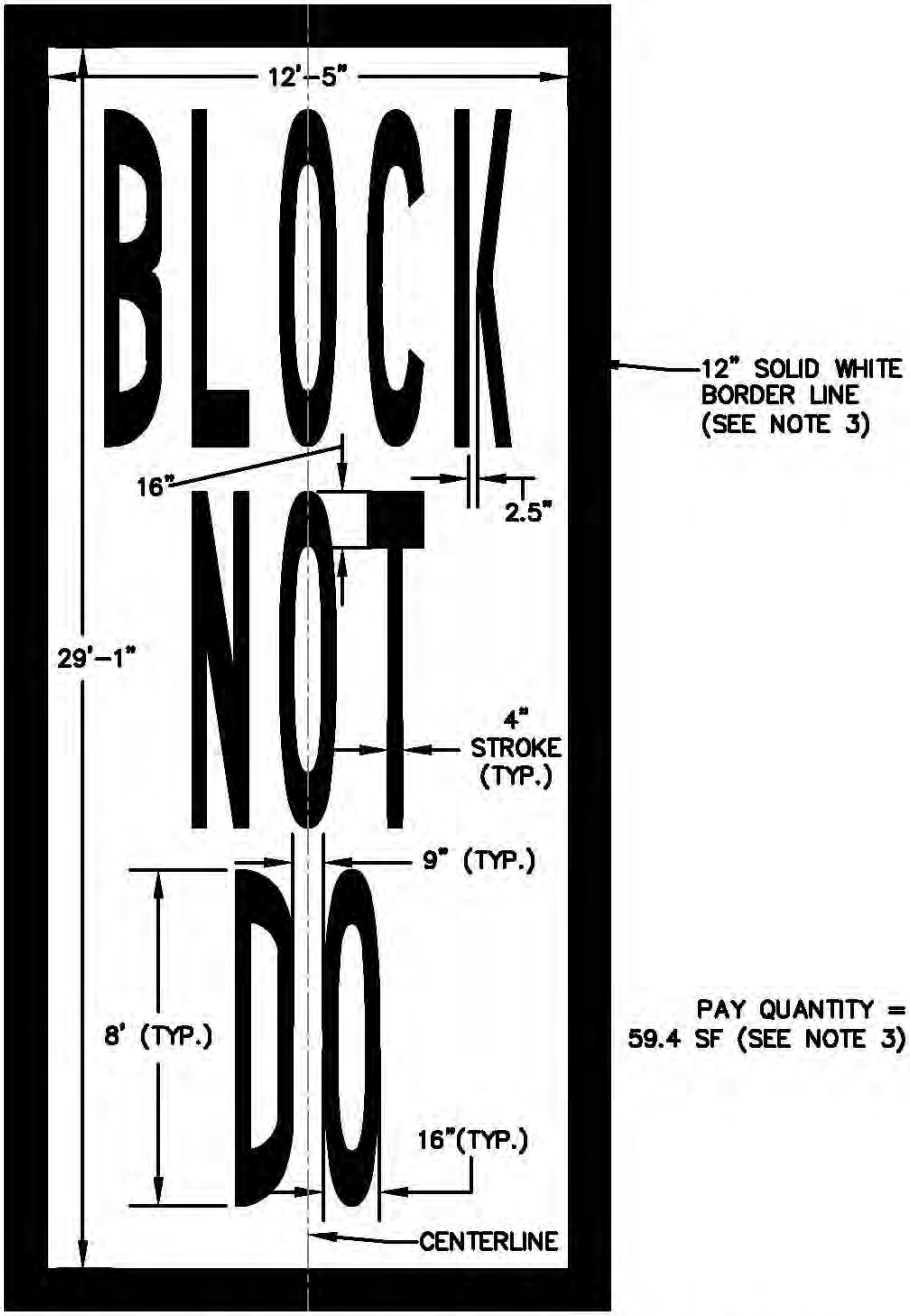

1) CENTERLINE OF LETTERING SHALL BE PLACED ON THE CENTERLINE OF LANE OF TRAVEL. FOR MULTIPLE LANES, CENTERLINE OF THE COMBINED LANES SHALL BE USED.

2) PAINT USED SHALL BE WHITE THERMOPLASTIC.

3) PAY QUANTITY FOR LETTERS ONLY, 12 INCH BORDER LINES WILL BE PAID FOR BY LINEAR FOOT (87.0 LF).

"DO NOT BLOCK" INTERSECTION DETAIL

S:\DWG\DETAILS\632-1 DO NOT BLOCK.DWG

NOT TO SCALE
FIG. 632-1

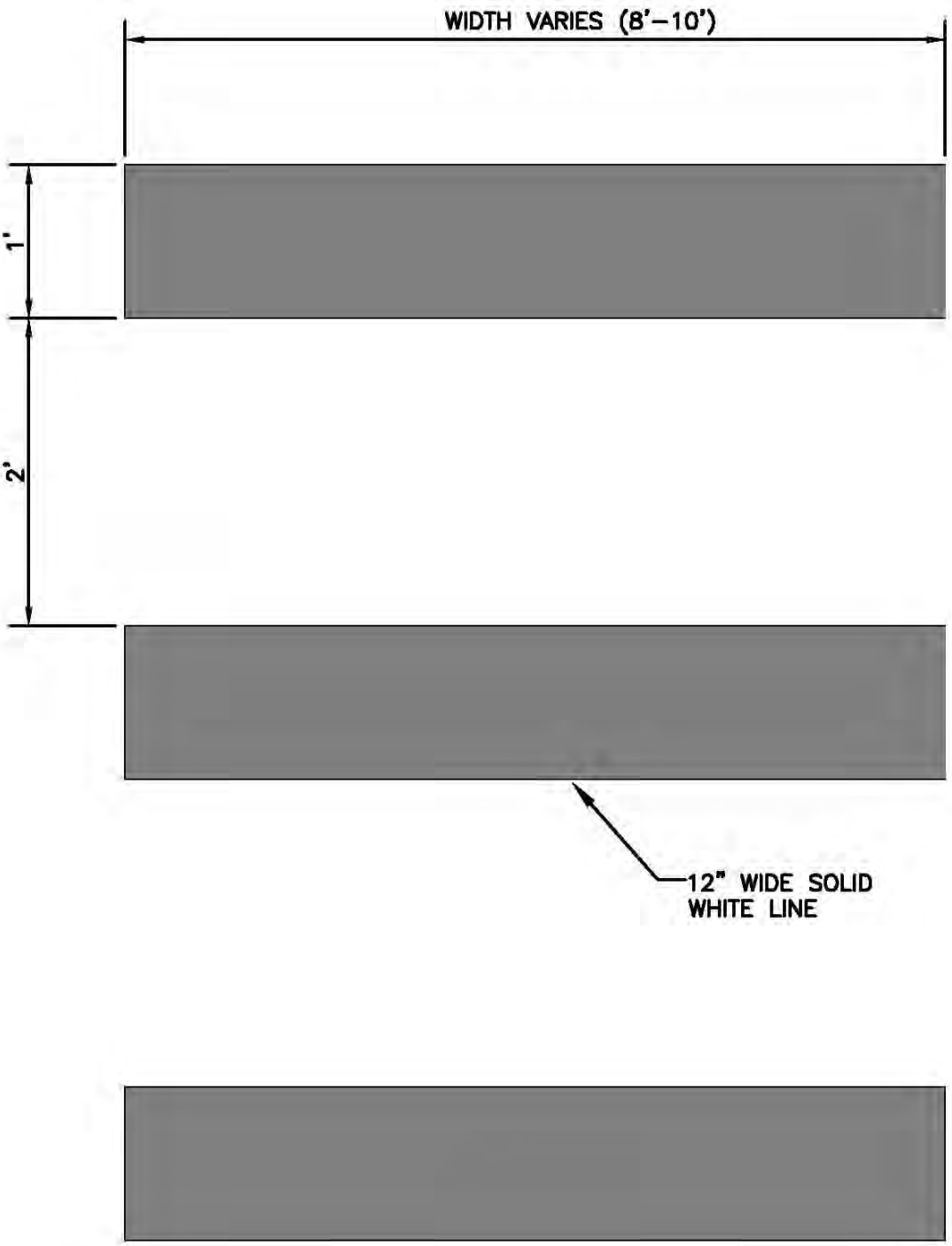

NOTE: ALL MARKINGS TO BE THERMOPLASTIC

TYPICAL CROSSWALK

S:\DWG\DETAILS\632-1 CROSSWLK.DWG

NOT TO SCALE
FIG. 632–2

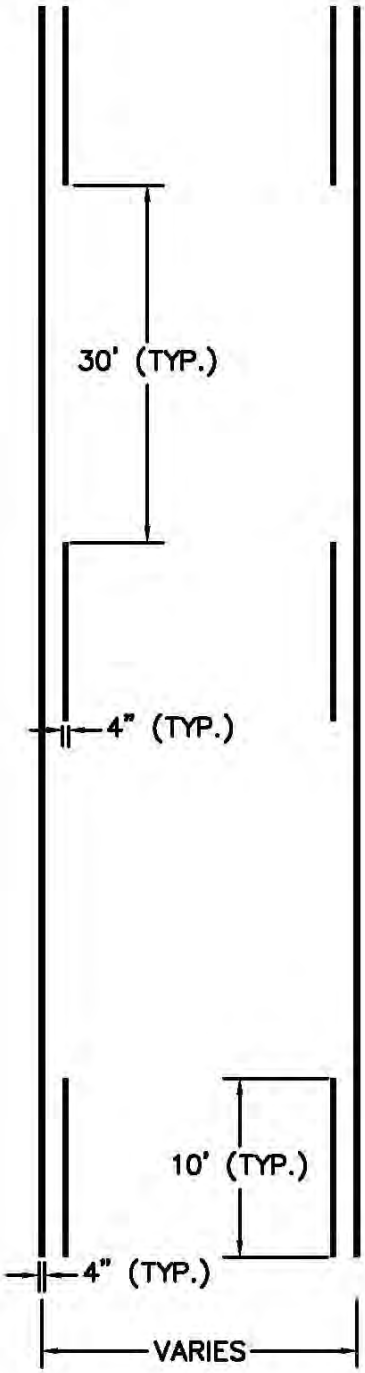

FIGURE 632-3 DOUBLE LINE (SOLID WITH BROKEN)

NOT TO SCALE
FIG. 632-3

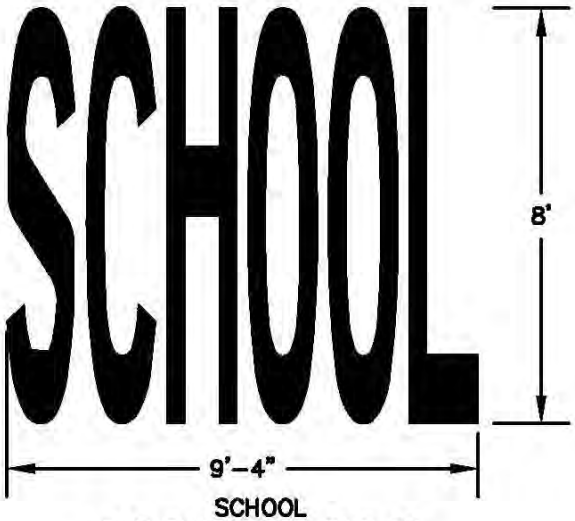

SCHOOL
PAY QUANTITY = 34.7 SF

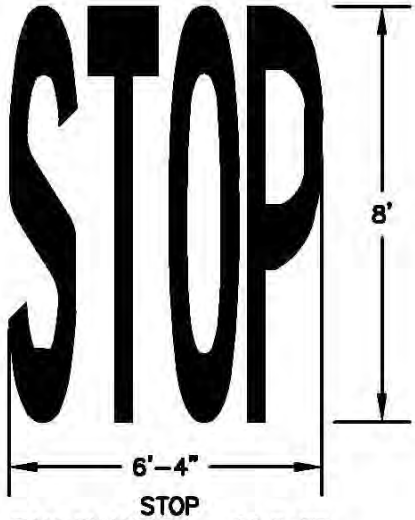

STOP
PAY QUANTITY = 22.2 SF

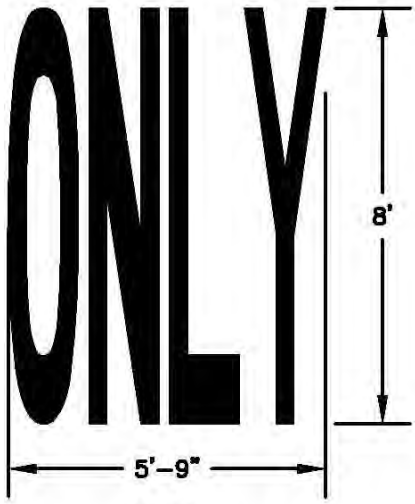

ONLY
PAY QUANTITY = 22.3 SF

PAY QUANTITIES FOR STANDARD (8FT) LETTERS AND NUMERALS			
A	5.8	S	6.1
B	7.7	T	4.0
C	5.3	U	6.6
D	6.8	V	5.0
E	6.3	W	7.0
F	5.0	X	4.3
G	6.3	Y	4.2
H	6.6	Z	5.7
I	2.0	1	2.0
J	3.9	2	5.8
K	6.4	3	5.8
L	4.1	4	5.1
M	9.0	5	6.4
N	7.7	6	6.8
O	6.3	7	3.8
P	5.8	8	7.0
Q	6.7	9	6.8
R	6.8	0	6.3
		–	0.5

1. WORDS SHALL RETROREFLECTIVE WHITE AND CONFORM TO THE LATEST VERSION OF THE MUTCD
2. MULTI WORD MESSAGES SHALL READ "UP". FIRST WORD SHALL BE NEAREST TO APPROACHING DRIVER
3. THE WORD ONLY SHALL NOT BE USED WITH THROUGH OR COMBINATION ARROWS AND SHALL NOT BE USED ADJACENT TO A BROKEN LANE LINE. A WORD/SYMBOL SHALL PRECEDE THE WORD "ONLY".
4. PREFORMED WORDS SHALL BE CUT BY THE MANUFACTURER. ALL PAINT SHALL BE THERMOPLASTIC

WORD PAVEMENT MARKINGS

S:\DWG\DETAILS\632-4 WORD.DWG

NOT TO SCALE
FIG. 632-4

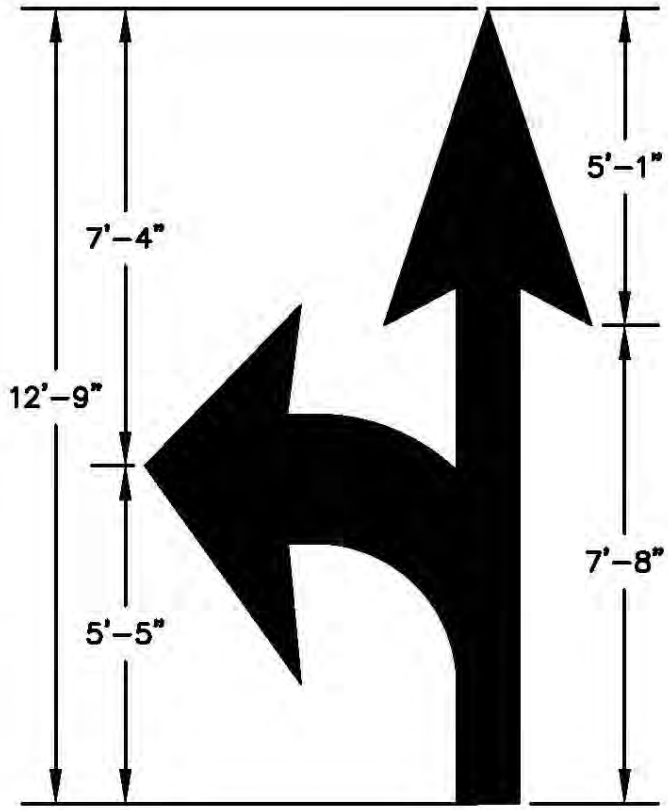

COMBINATION ARROW

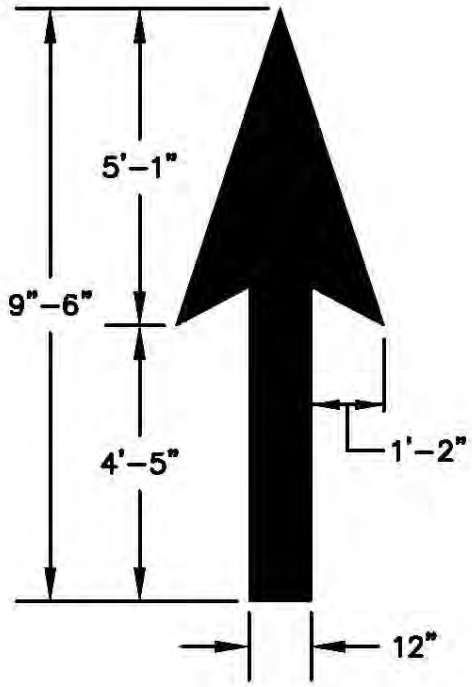

THROUGH (STRAIGHT) ARROW

1. ARROWS SHALL RETROREFLECTIVE WHITE AND CONFORM TO THE LATEST VERSION OF THE MUTCD.
2. PREFORMED ARROWS SHALL BE CUT BY THE MANUFACTURER. ALL PAINT SHALL BE THERMOPLASTIC.
3. COMBINATION ARROWS MAY BE COMPRISED OF 2 SINGLE ARROWS (I.E. TURN AND THROUGH) HOWEVER SHAFTS SHALL COINCIDE AS SHOWN.

PAY QUANTITY FOR STANDARD ARROWS	
THROUGH (STRAIGHT)	12.5 SF
TURN (LEFT OR RIGHT)	17.0 SF
COMBINATION (STRAIGHT AND TURN)	28.8 SF
DOUBLE (LEFT AND RIGHT)	32.5 SF

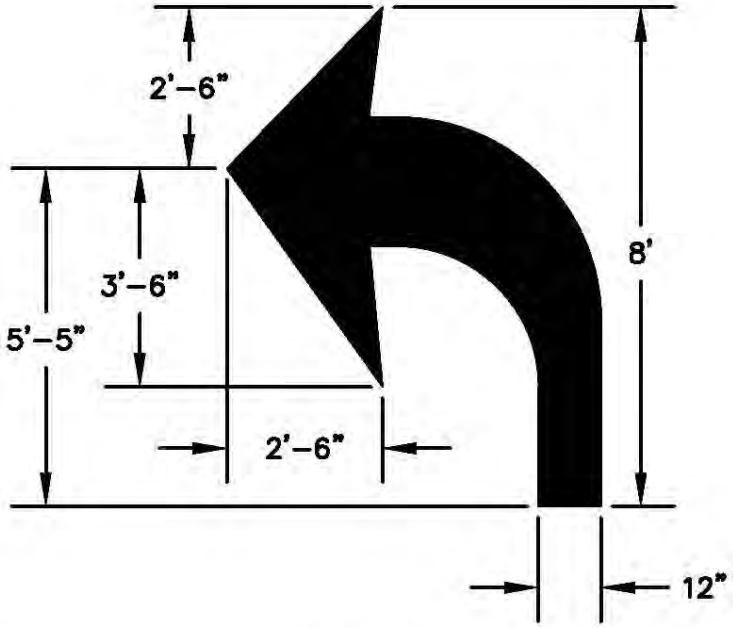

TURN ARROW
(RIGHT TURN OPPOSITE IN KIND)

ARROW PAVEMENT MARKINGS

S:\DWG\DETAILS\632-5 ARROW.DWG

NOT TO SCALE
FIG. 632-5

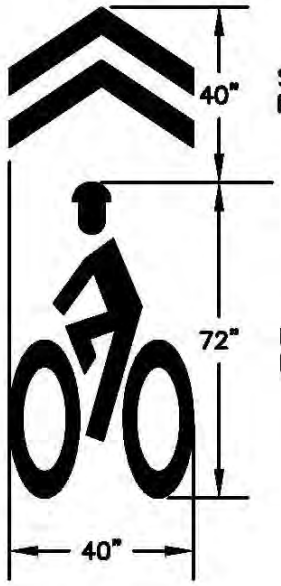

SHARROW SYMBOL
PAY QUANTITY = 3.3 SF

BIKE LANE SYMBOL
PAY QUANTITY = 8.1 SF

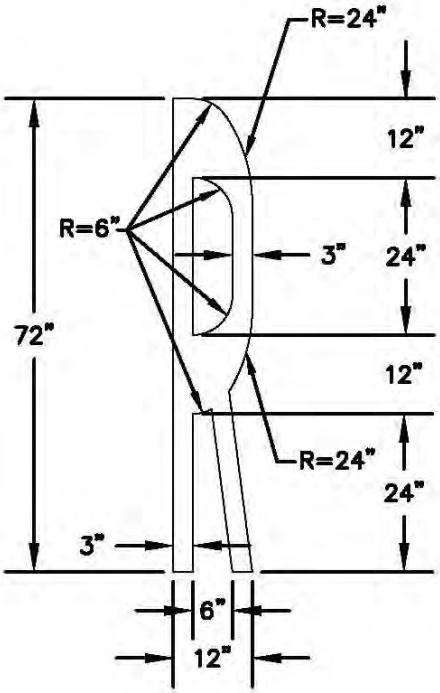

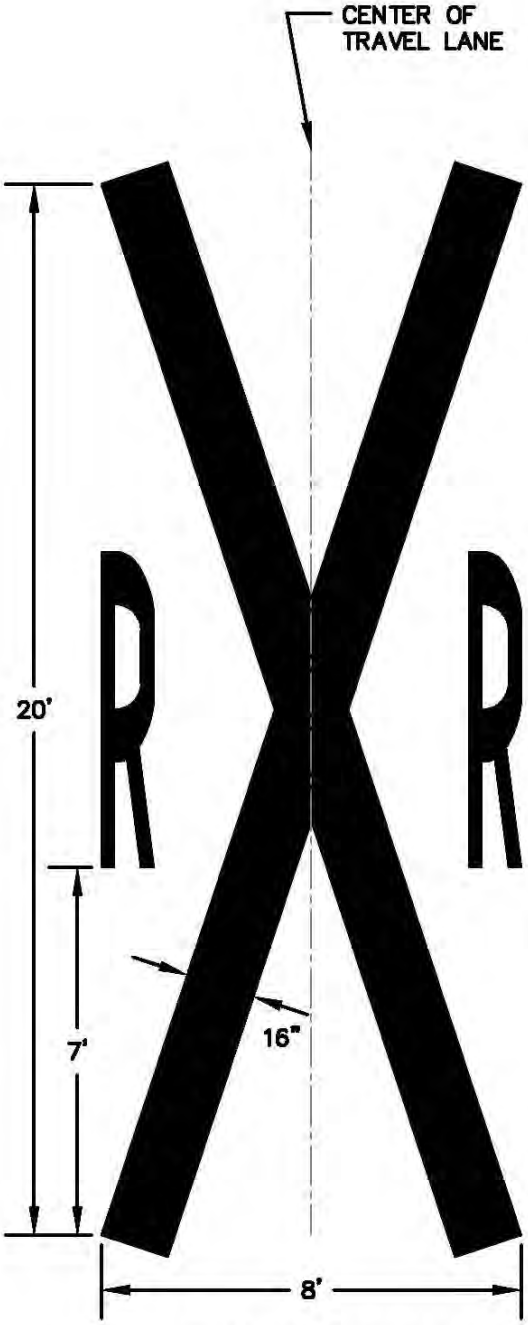

RAIL CROSSING SYMBOL
PAY QUANTITY = 63.6 SF

RAIL CROSSING AND BIKE SYMBOL DETAILS

S:\DWG\DETAILS\632-6 BIKE AND RAIL

NOT TO SCALE
FIG. 632-6

1. RXR SYMBOL WILL BE PAID FOR BY THE SQUARE FOOT, TRANSVERSE LINES AND STOP BARS (24" WIDE) WILL BE PAID FOR BY THE LINEAR FOOT.

2. ON MULTI LANE ROADS THE TRANSVERSE LINES SHOULD EXTEND ACROSS ALL APPROACH LANES AND INDIVIDUAL RXR SYMBOLS SHOULD BE USED IN EACH LANE.

3. STOP LINE SHALL BE PERPENDICULAR TO HIGHWAY CENTERLINE.

4. DISTANCE SHALL BE 15 FEET MINIMUM, 20 FEET MAXIMUM FROM NEAREST RAIL, OR APPROXIMATELY 8 FEET FROM GATE IF PRESENT.

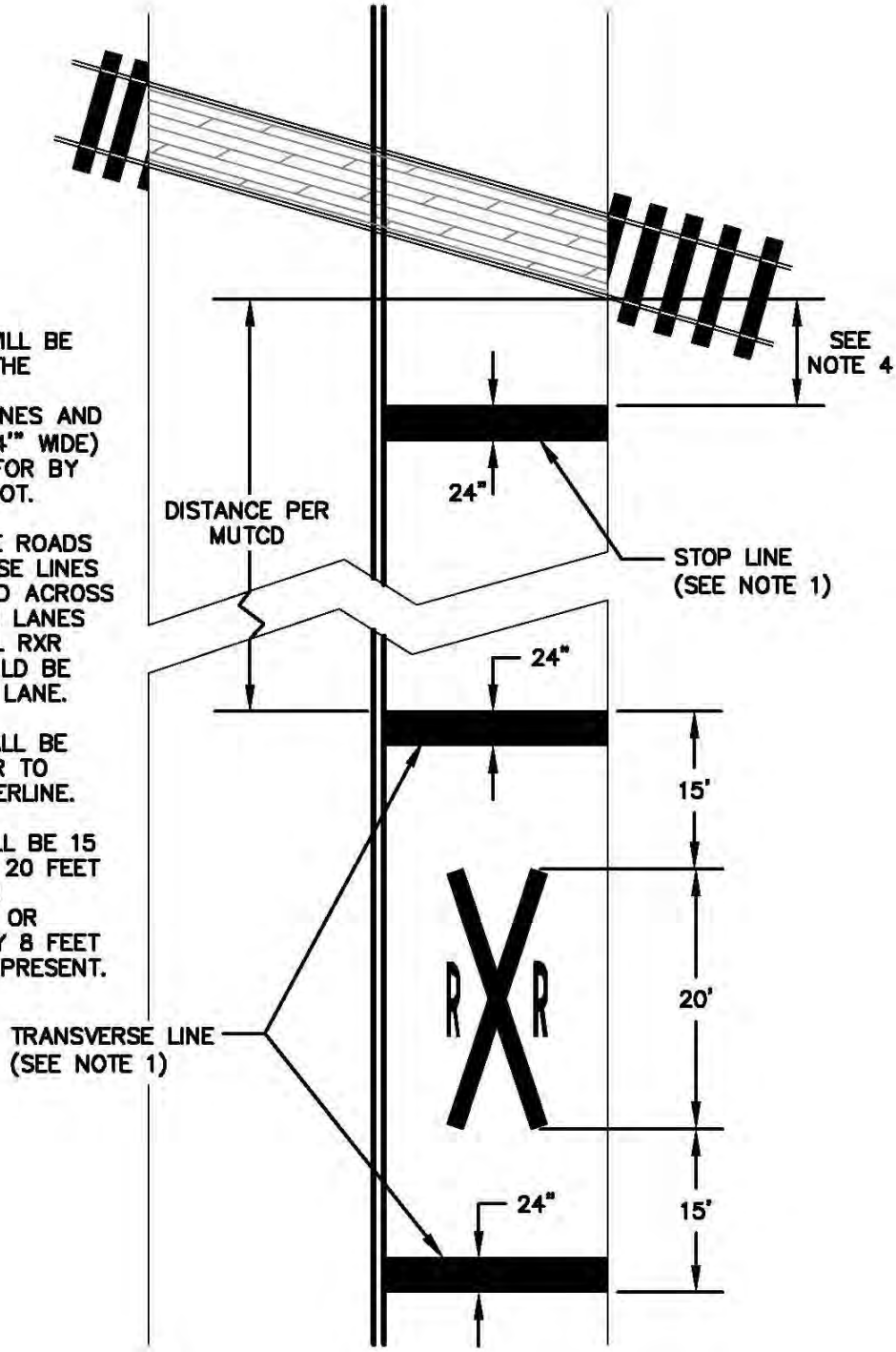

AT GRADE RAILROAD MARKING LAYOUT

S:\DWG\DETAILS\632-6 BIKE AND RAIL

NOT TO SCALE
FIG. 632-7

SECTION 641 -- LOAM

Description

1.1 This work shall consist of collecting and preparing loam material encountered in the work or obtained from other sources and placing the material at the locations shown on the plans or ordered, including necessary excavation for placing loam.

Materials

2.1 Loam shall consist of loose friable topsoil with no admixture of refuse or material toxic to plant growth. Loam shall be free from stones, lumps, stumps or similar objects larger than 3/4 inches in greatest diameter, subsoil, roots and weeds. The term as used herein shall mean that portion of the soil profile defined technically as the "A" horizon by the Soil Science Society of America. The minimum and maximum pH value shall be from 5.5 to 7.6. Loam shall be tested in conformance with the Standards of the Association of Official Agricultural Chemists. Loam shall contain a minimum of 3 percent and a maximum of 10 percent of organic matter as determined by loss by ignition. Not more than 65 percent shall pass a No.#200 sieve as determined by the wash test in accordance with ASTM D1140. In no instance shall more than 20% of the material passing the No. 4 sieve consist of clay size particles. Prior to stripping material to be used as loam, it shall have demonstrated by the occurrence upon it of healthy crops, grass or other plant growth, that it is of good quality and reasonably free draining.

2.1.1 Natural topsoil not conforming to 2.1 shall be treated by the Contractor to meet that specification.

Construction Requirements

3.1 The loam shall be spread upon the previously prepared surface to the depth of 4 inches unless otherwise specified and shall be raked carefully to remove all objectionable materials. Loam spread shall be placed in a manner to provided a loose, friable seedbed. Loam placed adjacent to lawns or where directed, shall be compacted with a roller weighing approximately 100 pounds per foot of roller width. All depressions exposed during the rolling shall be filled with additional loam.

Method of Measurement

4.1 Loam will be measured by the square yard as determined by actual surface measurements of the lengths and widths of the loamed areas.

Basis of Payment

5.1 The accepted quantities of loam of the various depths specified will be paid for at the contract unit price per square yard complete in place.

5.2 Materials used for treating natural topsoil as in 2.1.1 will be subsidiary.

Pay Items and Units, Section 641 -- Loam:

641.0	Loam, 4 Inches Deep	Square Yard

SECTION 642 -- LIMESTONE

Description

1.1 This work shall consist of furnishing and applying limestone on areas shown on the plans or ordered.

Materials

2.1 Limestone shall be a calcic or dolomitic ground agricultural limestone containing not less than 95 percent of either calcium or magnesium carbonate or both. It shall conform to the standards of the Association of Official Agricultural Chemists and shall comply with all existing State and Federal regulations.

2.1.1 Sieve Analysis. A minimum of 40 percent shall pass a No. 100 sieve and a minimum of 95 percent shall pass a No. 8 sieve.

2.1.2 Packaging. Limestone shall be furnished in new, clean, sealed and properly labeled bags of not more than 100 pounds each with the following information clearly marked thereon:

(a) Manufacturer's name
(b) Type
(c) Weight
(d) Guaranteed analysis.

2.1.3 Caked or otherwise damaged limestone may be rejected.

2.2 Other liming materials may be used, if permitted.

Construction Requirements

3.1 Limestone shall be used when ordered, to raise the pH of the soil at a rate determined by the Engineer, in accordance with Table 642- 1.

Table 642- 1 Limestone Required to Raise Soil pH to Min. (pH 5.5)

Existing PH	Tons/Acre	lbs./C.Y.
4.0 - 4.4	3	12
4.5 - 4.9	2	8
5.0 - 5.4	1	4

3.2 Limestone shall be applied by either the dry or hydraulic methods specified in 644.3.5.

Method of Measurement

4.1 Limestone will be measured by the ton in accordance with 108.01, on the basis of delivery slips forwarded to the Engineer but not to exceed the rate ordered. Measurements will be made to the nearest 0.01 of a ton.

Basis of Payment

5.1 The accepted quantity of limestone will be paid for at the contract unit price per ton complete in place.

Pay Items and Units, Section 642 -- Limestone:

642	Limestone	Ton

SECTION 643 -- FERTILIZER FOR GRASSES

Description

1.1 This work shall consist of furnishing and applying an initial application of fertilizer on a new surface and one or more re-fertilizations after the growth has progressed sufficiently, all as shown on the plans or ordered.

Materials

2.1 Fertilizer shall be a standard commercial grade fertilizer conforming to all State and Federal regulations and to the standards of the Association of Official Agricultural Chemists. The analysis shall represent respective percentages of nitrogen, phosphoric acid and potash.

2.1.1 Except as permitted, the analysis ratio shall be 1:1:1 for initial application and 3:1:2 for re-fertilization application. The analyses in Table 643- 1 are preferred. Permission to furnish fertilizer with an analysis varying from that listed in the table will be based upon reasons given in writing by the Contractor requesting such variance.

Table 643- 1 Fertilizer Information

Percent Nutrients		Minimum Application Rate (Lbs./1,000 S.F.)	Measurement Factor
Initial	**Re-fertilization**		
10-10-10		20.0	1.0
15-15-15		13.4	1.5
19-19-19		10.5	1.9
	10-3-6	20.0	1.0
	12-2-8	16.7	1.2
	12-4-8	16.7	1.2

2.1.2 A minimum of 30 percent of the nitrogen in fertilizer used for re-fertilization shall be water insoluble (WIN).

2.2 All fertilizer shall be identified by labels and shall show the following:

(a) Guaranteed analysis.
(b) Name and address of the guarantor of the fertilizer.
(c) Type or brand.
(d) Net weight.

2.2.1 When furnished as a liquid, the fertilizer shall be delivered in an appropriate container or vehicle and shall conform to the pertinent sections of the Fertilizer Rules and Regulations issued by the New Hampshire Department of Agriculture.

Construction Requirements

3.1 Fertilizer shall be uniformly applied by either the dry or hydraulic method specified in 644.3.5. When the dry method is used, special care shall be taken to thoroughly work the fertilizer into the soil.

3.1.1 The rate of application shall be based upon the nitrogen content and shall be a rate between 2.0 and 2.2 pounds of nitrogen per 1,000 square feet. See Table 643-1 for further information.

3.2 Unless otherwise ordered not less than 3 months shall elapse between the initial fertilization and the re-fertilization. No re-fertilization ordinarily will be allowed between November 1st or when the ground has frozen and the following April 1st or between June 1 and the following September 1. Re-fertilization will be allowed between August 15 and 31 only when it is determined that the permanent grasses have developed well and few weeds have appeared and such re-fertilization will not tend to promote the growth of noxious weeds.

Method of Measurement

4.1 Fertilizer will be measured by the pound or by the ton and in accordance with 108.01 on the basis of weight slips or delivery slips forwarded to the Engineer, but not to exceed the maximum rate specified or ordered. Measurements by the ton will be made to the nearest 0.01 of a ton.

4.1.1 The quantity for payment will be the product of the accepted quantity used and the appropriate measurement factor from Table 643- 1.

Basis of Payment

5.1 The accepted quantity of fertilizer will be paid for at the contract unit price per pound or per ton complete in place.

Pay Items and Units, Section 643 -- Fertilizer For Grasses:

643.11	Fertilizer for Initial Application	Pound
643.12	Fertilizer for Initial Application	Ton
643.21	Fertilizer for Refertilization	Pound
643.22	Fertilizer for Refertilization	Ton

SECTION 644 -- GRASS SEED

Description

1.1 This work shall consist of furnishing and sowing grass seed as shown on the plans or as ordered.

Materials

2.1 General.

2.1.1 Grass seed shall meet the requirements of the New Hampshire Agricultural and Vegetable Seeds Law. As specified in the law, the mixture shall include no "primary noxious weed seeds".

2.1.2 Grass seed of the specified mixtures shall be furnished in fully labeled, standard sealed containers.

2.1.3 Percent germination and purity of each seed type in the mixture and weed seed content of the mixture shall be clearly stated on the label.

2.1.4 Seed shall be subject to the testing provisions of the Association of Official Seed Analysts. The month and year of test shall be clearly stated on the label.

2.1.5 Seed may be tested after it has been delivered to the project.

2.1.6 Seed which has become wet, moldy or otherwise damaged will not be acceptable.

2.2 Park Seed Type 15 shall normally be used on loam areas. This seed mixture shall conform to Table 644-1.

Table 644- 1 Park Seed, Type 15

Kind Of Seed	Minimum Purity (%)	Minimum Germination (%)	Lbs/Acre
Creeping Red Fescue	96	85	40
Perennial Ryegrass [a]	98	90	50
Kentucky Bluegrass [b]	97	85	25
Redtop	95	80	5
Total:			120

2.3 Slope Seed, Type 44 shall normally be used for all slope work and areas not requiring mowing, and shall conform to Table 644-2 unless amended by the Engineer to suit special local conditions encountered.

Table 644- 2 Slope Seed, Type 44

Kind Of Seed	Minimum Purity (%)	Minimum Germination (%)	Lbs/Acre
Creeping Red Fescue [c]	96	85	35
Perennial Ryegrass [a]	98	90	30
Redtop	95	80	5
Alsike Clover	97	90 [e]	5
Birdsfoot Trefoil [d]	98	80 [e]	5
Total:			80

[a]- Ryegrass shall be a certified fine-textured variety such as Pennfine, Fiesta, Yorktown, Diplomat or equal.
[b]- Bluegrass shall be a certified variety such as Merion, Baron, Majestic Touchdown, Nugget, Ram One or equal.
[c]- Fescue varieties shall include: creeping red and/or Hard Reliant, Scaldis, Koket or Jamestown.
[d]- (Empire variety preferred) Inoculum specified to Birdsfoot Trefoil, must be used with this mixture. The inoculum shall be a pure culture of nitrogen-fixing bacteria selected for maximum vitality and the ability to transform nitrogen from the air into soluble nitrates and to deposit them in the soil. The inoculum shall not be used later than the date specified. The inoculum shall be subject to approval.
[e]- Includes not more than 10 percent hard seed for Alsike Clover and not more than 25 percent hard seed for Birdsfoot Trefoil. If necessary, to meet this requirement, extra seed shall be supplied at no expense to the City.

Construction Requirements

3.1 General.

3.1.1 In order to prevent unnecessary erosion of newly graded slopes and unnecessary siltation of drainage ways, the Contractor shall carry out erosion control items of work such as seeding and mulching as soon as he has satisfactorily completed a unit or portion of the project.

3.1.2 When immediate protection of newly graded areas is necessary at a time which is outside of the normal seeding season, hay mulch shall be applied in accordance with 645 with the seeding done at the same time or done later or both, as ordered.

3.1.2.1 When immediate seeding is required on areas of the roadside which are not to be regraded or disturbed, one of the above specified seed mixtures shall be used as ordered.

3.1.2.2 Areas of the roadside which are to be left temporarily and which will be regraded or otherwise disturbed later during construction may be ordered to be seeded

with ryegrass under 645 to obtain temporary control. Ryegrass shall be spread at the rate of approximately 1 pound per 1,000 square feet.

3.1.3 The Engineer reserves the right to prohibit the use of any equipment that is unsuitable or inadequate for the proper performance of the work. The Contractor must immediately remove all rejected equipment from the project.

3.1.4 When the seed mixture requires an innoculum, the innoculum shall be kept as cool as possible, at all times below 75 degrees F until used. Inoculated seed shall be protected from exposure to sunlight prior to sowing and all seed not sown within 24 hours following inoculation, shall be properly reinnoculated.

3.1.4.1 When grass seed is to be sown dry and the specific legume seed, such as Birdsfoot Trefoil, requiring inoculation is furnished on the project separately from the balance of the seed mixture, the legume seed shall be inoculated using twice the normal quantity recommended by the supplier, and regardless of the directions by the supplier, the seed shall be treated with a sticking agent to hold the innoculum to the seeds, and then treated with a drying agent. The sticking agent shall consist of a mixture such as 9:1 solution of water and molasses which shall be thoroughly mixed with the seed at the rate of 1/2 pint per 100 pounds of seed, unless a greater rate is recommended by the supplier. Before mixing the treated seed with the remainder of the seed mixture, a drying agent such as cornstarch shall be added at the rate of approximately 1/2 pound per 100 pounds of seed, unless another rate is specified.

3.1.4.2 When grass seed is to be sown dry and the legume seed is furnished on the project already mixed with the remainder of the seed mixture, 3 times the normal quantity of innoculant recommended by the supplier as sufficient for the quantity of legume in the mixture shall be mixed with the total seed. The sticking agent and the drying agent shall be mixed in the manner and at the rate specified in 3.1.4.1 with sufficient agents to treat the entire mixture.

3.1.4.3 When the seed is to be applied by the use of a hydraulic seeder, at least 4 times the normal amount of the appropriate innoculum required to inoculate only the legume, shall be added to the mixture just before application. See 3.5.2.7.

3.2 Seeding Seasons.

3.2.1 Seeding and initial fertilizing shall be done between April 1 and June 1, between August 15 and October 24, or as directed or permitted. Seeding shall not be done during windy weather or when the ground is frozen, excessively wet or otherwise untillable. If seeding is done during July or August, additional mulch material may be required by the Engineer.

3.3 Application Rates. Unless specifically ordered, seed shall be spread at the rates specified in 2.2 and 2.3.

3.4 Preparation.

3.4.1 All areas to be seeded shall be prepared to provide a reasonably firm but friable seed bed.

3.4.1.1 Sloped areas shall not be left too smooth; the surface shall be left in a ruffled condition such as may be produced by the use of tracked vehicles run up and down the slopes. Smooth compacted slopes such as may be left from blading, which might allow the free flow of water down them shall be disked, harrowed, dragged with a chain or mat, machine-raked or hand worked as directed to give the effect of miniature terraces, particularly in silty or clayey soils. The slopes shall however; be left smooth enough to enable mowing.

3.4.1.2 Lawn areas such as where loam has been spread shall be prepared for seeding in accordance with 641.3.1.

3.4.2 All areas to be seeded shall meet the specified grades and shall be free of growth and debris.

3.4.3 Care shall be taken to prevent the formation of low places and pockets where water will stand.

3.4.4 Where ryegrass has been planted for temporary erosion control and has not been eliminated prior to the completion of the work, such areas shall be disked at least 3 inches deep and seeded to permanent grasses to prevent the ryegrass from reseeding and becoming competitive with and retarding development of the permanent cover.

3.5 Seeding Methods. Fertilizer, limestone and mulch material if required and seed of the type specified may be placed at the locations shown or ordered by one of the following methods, provided an even distribution is obtained.

3.5.1 Dry Method.

3.5.1.1 Power Equipment. Mechanical seeders, seed drills, landscape seeders, cultipacker seeders, fertilizer spreaders or other approved mechanical seeding equipment or attachments may be used when seed, limestone and fertilizer are to be applied in dry form.

3.5.1.2 Manual Equipment. On areas which are inaccessible to power equipment, permission may be given to use hand-operated mechanical equipment when the materials are to be applied in dry form. The use of hand shovels to spread the materials will not be allowed.

3.5.1.3 When the dry method is used, limestone and fertilizer shall not be mixed together prior to their application, but they shall be worked into the soil together to the depth of at least 1 inch.

3.5.1.4 Seeding may occur following this procedure.

3.5.1.5 Loamed areas or areas covered with park seed shall be raked and unless rolling is ordered omitted, shall be rolled with a roller weighing not more than 100 pounds per foot of roller width to firm the soil, but not to pack it. The rolling shall be done the same day as the seeding unless otherwise permitted.

3.5.1.6 Unless otherwise ordered, areas covered with park seed or slope seed, shall be mulched in accordance with Section 645 . Private lawns affected by this specification need not be mulched unless it is requested by the landowner.

3.5.2 Hydraulic Method.

3.5.2.1 The application of grass seed, fertilizer, limestone and a suitable wood fiber mulch shall be accomplished in one operation by use of an approved spraying machine.

3.5.2.2 The materials shall be mixed with water in the machine and kept in an agitated state in order that the materials may be uniformly suspended in the water.

3.5.2.3 The spraying equipment shall be so designed that the solution is sprayed over an area, the resulting deposits of limestone, fertilizer and grass seed shall be equal in quantity to the required rates.

3.5.2.4 Prior to the start of work, the Engineer shall be furnished with a certified statement for approval as to the number of pounds of materials to be used per 100 gallons of water. This statement shall also specify the number of square feet of seeding that can be covered with the quantity of solution in the hydroseeder.

3.5.2.5 The hydraulic seeding and fertilizing machine shall be completely flushed and cleaned each day before seeding is to be started and shall also be thoroughly flushed of all residue after the completion of application on every 10 acres.

3.5.2.6 If the results of the spray operations are unsatisfactory, the Contractor will be required to abandon this method and apply the materials in accordance with 3.5.1.

3.5.2.7 When inoculum is required, if the inoculum is left in solution with fertilizer longer than 30 minutes, a fresh charge of inoculum (4 times normal) shall be added to the mixture. See 3.1.4.3.

3.5.2.8 When the hydraulic method is used, compaction or rolling will not be required.

3.5.2.9 Except as provided in 3.1.2, unless mulch material required is applied during the seeding operation or within 1/2 hour following the seeding operation, temporary and satisfactory measures to protect the seed from sunlight and heat shall be taken such as the

use of a light brush drag over the seeded areas to stir the seed into the soil. Care shall be taken not to carry the seed ahead.

3.6 Care After Seeding.

3.6.1 The Contractor shall be responsible for protecting and caring for seeded areas until final acceptance of the work. He shall repair at his own expense any damage to seeded areas caused by pedestrian or vehicular traffic or other causes, except for conditions as covered in 103.06.

3.6.2 If necessary, barricades of brush or other materials and suitable signs shall be placed to protect the seeded areas.

3.6.3 The seeded areas shall be carefully and suitably watered as necessary to produce a satisfactory growth.

3.6.4 Areas seeded with Park Seed shall be mowed whenever necessary to keep the growth between 3 inches and 6 inches in order to allow light to penetrate to the shorter, slower growing species in the mixture. Areas seeded with slope seed may be ordered mowed whenever the contract extends into a second growing season.

3.6.5 Weeds growing in areas seeded with the slope seed shall be cut back to prevent them from dominating the desired grass plants.

3.7 Liability.

3.7.1 The Contractor shall keep all seeded areas in good repair.

3.7.2 To be acceptable, a stand of grass shall show a reasonably thick, uniform stand free from sizeable areas of thin or bare spots with a uniform count of at least 100 plants of specified grass per square foot. When applicable, at least three Birdsfoot Trefoil plants per square foot must be visible with the other specified grasses.

3.7.3 Any part of seeded areas which fail to show a uniform stand shall be reseeded until all areas are covered with grass at no additional cost to the City.

Method of Measurement

4.1 Grass seed shall be measured by the pound based upon the delivery slips and tags furnished by the Engineer, but not to exceed the rate specified or ordered.

Basis of Payment

5.1 The accepted quantity of grass seed will be paid for at the contract unit price per pound of the type specified complete in place.

5.1.1 Seeded areas which need reseeding will be done at the Contractor's expense.

5.2 Hay mulch will be paid for under Section 645 .

5.3 Limestone will be paid for under Section 642.

5.4 Fertilizer will be paid for under Section 643.

5.5 Ryegrass for temporary erosion control will be paid for under Item 645.52.

Pay Items and Units, Section 644 -- Grass Seed:

644.15	Park Seed, Type 15	Pound
644.44	Slope Seed, Type 44	Pound
644.51	Birdsfoot Trefoil	Pound

SECTION 645 – EROSION AND SEDIMENTATION CONTROL

Description

1.1 Erosion and Sedimentation Control Products as shown on the plans or required during the life of the Contract, both temporary and permanent, to control erosion and sedimentation. This work includes but is not necessarily limited to the use of: pipes, berms, dams, sluices, sediment basins, mulch, seeding, fiber mats, rolled erosion control products (RECP), silt booms, silt fence, filter fabrics, netting, gravel, erosion stone, slope drains and other erosion control devices or methods.

1.2 Storm Water Pollution Prevention Plan (SWPPP). This work shall consist of monitoring of temporary erosion and sediment controls as may be required under a Storm Water Pollution Prevention Plan or "SWPPP".

Materials

2.1 Mulch

2.1.1 Hay mulch shall consist of cured hay, free from noxious weeds including prohibited invasive plants listed in Table 3800.1 of the New Hampshire Department of Agriculture, Markets & Food rule AGR 3800 and rough or woody materials.

2.1.2 Bark mulch shall be bark chippings graded to be approximately 3/8 to 2 inches in width. The chippings shall not have been stored so long and under such conditions that the material has decomposed sufficiently so that it has lost its fibrous texture. Bark mulch must be approved as to grading and condition prior to its use

2.1.3 Temporary mulches shall be hay, straw, fiber mats, netting, wood cellulose, bark, chips, or other approved material. The mulch shall be reasonably clean and free of noxious weeds and materials toxic to plant growth.

2.2 Slope and channel stabilization products of the type specified shall be a Rolled Erosion Control Product (RECP).

2.3 Staples for soil stabilization material matting shall be those specified by the manufacturer.

2.4 Grass seed for erosion control shall be one of the following:

(a) Seed for temporary control shall be a quick growing species suitable to the area, such as annual or perennial

(b) Seed for a more permanent control shall be of the type specified in the plans or as set forth in 644.2.3.

2.5 Hay bales for erosion control shall consist of rectangular shaped bales of hay or straw weighing at least 40 pounds per bale. They shall be free from weed seeds and viable parts of prohibited invasive plants in Table 3800.1 of the New Hampshire Department of Agriculture, Markets & Food rule AGR 3800 and rough or woody materials.

2.6 Silt Fence

2.6.1 Geotextile filter fabric for silt fence shall be made from polypropylene, polyester, or other approved polymeric chemically stable material and resistant to ultraviolet radiation degradation for at least 12 months. Silt retention capacity shall be no less than 75 percent of silt and suspended solids. The fabric shall meet the following requirements.

Fabric Property Test Method Property Requirement* Grab Tensile Strength (lbs)	ASTM D 4632	100 Min
Grab Tensile Elongation (%)	ASTM D 4632	25 Max
Puncture Strength (lbs)	ASTM D 4833	60 Min
Mullen Burst Strength (ps)	ASTM D 3786	210 Min
Trapezoid Tear Strength (lbs)	ASTM D 4533	60 Min

*All properties are minimum or maximum average roll values (i.e. the test results for any sampled roll in a lot shall meet or exceed the minimum values or be less than or meet the maximum value in the table.)

2.6.2 Posts for silt fence shall be either wood or steel. Wood posts shall be sound quality hardwood with a minimum cross sectional area of 1.6 sq. inches. Steel post shall be standard T or U section weighing not less than 1 pound per linear ft. with projections for fastening wire to the fence. Maximum post spacing shall be 10 feet.

2.6.3 Support fence for silt fence, if required, shall be a minimum of 14.5 gauge woven wire with a maximum 6 inch mesh.

2.7 Erosion stone shall meet the requirements for Item 585.4 Class D stone.

2.8 Erosion Control Mix

2.8.1 Erosion control mix can be utilized to provide for temporary control of erosion or sedimentation, including slope stabilization, check dams and berms, inlet control or where ordered.

2.8.2 The mix shall have an organic portion between 25% and 65%, dry weight basis, and be fibrous and elongated such as from shredded bark, stump grindings, composted bark, or equivalent manufactured products. The mix shall not contain silts, clays, or fine sands.

2.8.3 The mix shall have a pH between 5.0 and 8.0 and a particle size by weight of 100% passing a 3-inch screen, 90% to 100% passing a 1-inch screen, 70% to 100% passing a 0.75-inch screen, and 30% to 75% passing a 0.25-inch screen.

2.9 Storm Drain Inlet Protection

2.9.1 Stone used shall be a washed with a gradation that is well graded with the maximum stone size of 6 inches and a minimum stone size of 1 inch.

2.9.2 Hardware cloth or comparable wire mesh used shall have ½ inch openings

2.9.3 Manufactured devices for this work shall be made specifically for the purpose of protecting storm drain inlets and fit the specifics of the location of use. Contractor shall submit information to Engineer for approval prior to installation of products.

Construction Requirements

3.1 General

3.1.1 Prior to the start of any land disturbance activities, the Contractor shall familiarize themselves with the site and where bith temprarry and permanent erosion or sedimentation control items are required.

3.1.1.1 If required of the project the Contractor shall familiarize themselves with the Storm Water Pollution Prevention Plan (SWPPP). No work requiring erosion/sediment control shall commence until the SWPPP has been approved. Names of designated personnel to perform field monitoring shall be included in the submittal.

3.1.2 The Department will secure the necessary state and federal permits required to accomplish the work indicated on the plans. The Contractor is responsible for obtaining any additional permits for the Contractor's method of construction.

3.1.3 Permanent and temporary erosion control features shall be incorporated into the project at the earliest practicable time, as specified on the plans, as stated in 106.01, and as outlined in any approved SWPPP. Temporary erosion and sediment control measures shall be used to correct conditions that develop during construction to temporarily control erosion not associated with permanent control features. The temporary erosion and sediment controls shall be coordinated with the permanent erosion control features to the extent practicable to assure economical, effective and continuous erosion and sediment control throughout the construction and post construction periods.

3.1.4 Temporary erosion and sediment control features shall be maintained by the Contractor throughout the life of the project.

3.1.4.1 Temporary erosion and sediment control features can be removed once there is no future potential for erosion and sedimentation on the project.

3.1.5 The quantity of work required will depend upon many factors, among which is the amount and type of soil which may be exposed to erosion. The Contractor's attention is called to the fact that siltation of streams adversely affects the ecology.

3.1.6 When erosion is likely to be a problem, grubbing operations shall be so scheduled and performed that grading operations and permanent erosion control features can follow immediately thereafter.

3.1.7 The maximum amount of allowed disturbed earth material exposed shall not exceed a total of 2 acres for all operations at any one time. The Contractor may be permitted to exceed the maximum open area allowed, with approval from the Department. For the construction period from November 30th through May 1st the area of exposed, unstablized soil shall be limited to one acre.

3.1.8 The Engineer may limit the area of clearing, grubbing and excavation operations commensurate with the Contractor's capability and progress in keeping the finish grading, mulching, seeding, erosion and sediment control measures concurrent with operations in accordance with the SWPPP.

3.1.9 Earth excavation and embankment slopes shall be permanently or temporarily treated for stabilization before the time the slant height of exposed slopes reaches 30 feet, unless otherwise approved. Where construction activities are completed within the growing season, all exposed soil areas shall be permanently stabilized within 14 calendar days. Where construction activities are temporarily suspended or completed outside of the growing season, all exposed soil areas shall be treated for stabilization within 14 calendar days.

3.1.10 An area shall be considered “stabilized” when it is in a condition in which the soils on the site will not erode under the conditions of a 10-year storm.

3.1.11 As work progresses, patch seeding and mulching shall be done as required on areas previously treated to maintain or establish protective cover.

3.1.12 Drainage pipes and ditches shall be constructed in a sequence from outlet to inlet in order to stabilize outlet areas and ditches before water is directed to the new installation or any portion thereof unless conditions unique to the location warrant an alternative method. If this unique condition exists, the alternative method will require written approval.

3.1.13 Channel and ditch work, including erosion protection shall be completed before diverting the drainage to these areas.

3.1.14 In the event of conflict between these requirements and erosion and sediment control laws, rules or regulations of other Federal, State or local agencies, the more restrictive laws, rules or regulations shall apply.

3.1.15 In case of failure on the part of the Contractor to provide and maintain effective temporary erosion and sediment control, as determined by the Engineer, the Department reserves the right to employ outside assistance or to use its own forces to provide the necessary corrective measures.

3.2 Storm Water Pollution Prevention Plan. (SWPPP)

3.2.1 This Item addresses the preparation and implementation of a SWPPP required by the National Pollutant Discharge Elimination System (NPDES) and applicable Construction General Permit (CGP). The SWPPP shall be prepared for the Contractor by the Department unless otherwise stated within the Special Provisions of the Contract.

3.2.1.1 The Contractor will be required to implement and monitor the SWPPP. Individuals monitoring the SWPPP shall have knowledge of methods of construction, demonstrated field knowledge of erosion control measures; their design, effectiveness, and maintenance requirements.

3.2.1.2 The Contractor shall submit the name and qualifications of the personnel monitoring the SWPPP

3.2.2 The Construction General Permit (CGP) also requires the preparation and implementation of a SWPPP in accordance with the aforementioned statutes and regulations. It is the responsibility of the Contractor to be familiar with the CGP conditions and the conditions of any state Wetlands permit, Water Quality Certification, Corps of Engineers Section 404 Permit and other state and federal environmental permits applicable to this project and to include in the SWPPP the means and methods necessary to comply with applicable conditions of said permits.

It is the responsibility of the Contractor to complete the SWPPP in accordance with the EPA Construction General Permit, provide all information required, and obtain any and all certifications as required by the Construction General Permit. Any amendments to the SWPPP required by site conditions, schedule changes, revised work, construction methodologies, and the like are the responsibility of the Contractor. Amendments will require the approval of the Engineer prior to implementation.

The Contractor is responsible for all SWPPP certifications, inspections, reports and any and all corrective actions necessary to comply with the provisions of the CGP.

3.2.2.1 If required, the Contractor shall submit a schedule of construction phasing. This shall include information on maximum open area allowed, and a schedule for monitoring and maintaining the SWPPP. BM's for seasonal (i.e. cold weather/frozen ground, from November 30th through May 1st) applications shall be identified. The construction phasing shall address the various erosion and sediment control and storm water management measures to be implemented at each phase of

construction. Phases shall be as shown on the Traffic Control Plan, Prosecution of Work, or as required by the Contractor's approved construction sequence plan.

3.2.2.2 Turbidity limitations in receiving waters noted in 106.01shall be addressed in the SWPPP.

3.2.3 Monitoring SWPPP and Erosion and Sediment Control shall include on-site reviews, weekly and within 24 hours after any storm event greater than 0.5 inch of rain per 24 hour period. A monitoring report prepared by the SWPPP Monitor stating the inspection date, name, title, qualifications and signature of person performing the inspection, weather information for the period since the last inspection, weather information at the time of inspection, locations and description of any discharges, a summary of construction activities undertaken during the reporting period, general site conditions, erosion control maintenance and corrective actions taken, the anticipated schedule of construction activities for the next reporting period, any SWPPP amendments, and representative photographs. A copy the monitoring report and weekly meeting minutes shall be maintained on file with the SWPPP at the project site.

3.2.4 The Engineer may order modifications to the SWPPP for changing operations or for inadequate erosion and sediment control and stormwater management measures. Changes and/or modifications shall be noted on the approved SWPPP located at the project site.

3.2.5 The Project work may be suspended, wholly or in part, with no extension of time or additional compensation for failure to implement and maintain the approved SWPPP, including modifications, in accordance with 104.02.

3.3 Mulch

3.3.1 Mulching shall be done immediately after each area has been properly prepared. When seed for erosion control is sown prior to placing the mulch, the mulch shall be placed on the seeded areas within 48 hours after seeding. Hay that has been thoroughly fluffed shall be applied at approximately, but not to exceed 3 tons per acre unless otherwise ordered. Blowing chopped hay mulch will be permitted provided the Contractor controls the mulching operation so as not to infringe on property owners or the traveling public. Hay mulch shall be applied in such a manner that results in a minimum amount of matting that would not retard the vegetative growth. Hay mulch should cover the ground enough to shade it, but the mulch should not be so thick as to cover the ground completely. Matted or bunches of mulch shall be removed or otherwise remedied.

3.3.1.1 Temporary mulching shall be done on areas that are disturbed per 3.1.8. Hay shall be applied at a minimum of 3.2 tons per acre unless otherwise ordered. Blowing chopped hay mulch will be permitted provided the Contractor controls the mulching operation so as not to infringe on property owners or the traveling public. Tackifiers shall be utilized with temporary mulch.

3.3.2 In order to prevent mulch from being blown away, a light covering of loose branches or approved tackifier shall be employed. Unless otherwise ordered, loose branches shall be removed prior to Acceptance of the Work.

3.3.3 All baling wire or rope, such as that used in the shipment of mulch shall be disposed of outside the limits of the project in approved areas.

3.3.4 Bark mulch shall be placed on the designated areas to the depth specified on the plans or as ordered.

3.3.5 On areas treated with bark mulch, the Contractor shall remove weeds and plant material as directed.

3.4 Rolled Erosion Control Products (RECP)

3.4.1 Rolled Erosion Control Products (RECP), of the type specified, shall be installed where shown on the plans or as directed by the Engineer.

3.4.2 RECPs for slope and channel stabilization shall be installed as per the manufacturer's recommendations for the specific application and site conditions, or as directed by the Engineer.

3.4.3 Surfaces of ditches and slopes to receive RECPs shall conform to the grades and cross sections shown on the plans and shall be finished to a smooth and even condition with all debris, roots, stones, and lumps raked out and removed. Unless otherwise directed, soil shall be prepared, including the application of lime, fertilizer and seed, prior to installation of the specified type of RECP.

3.4.4 The RECP shall be placed so that is in intimate contact with the soil surface over the entire installation. Site conditions may require the use of additional staples to assure that this contact is maintained. The RECP shall not be stretched.

3.4.5 RECPs shall be buried at the top of slope and around the edges of catch basins and other structures or obstructions as recommended by the manufacturer.

3.4.6 In the event that the RECP installation becomes damaged, undermined, or raised off of the soil surface by vegetation, it shall be repaired immediately as per manufacturer's recommendations.

3.5 Seed for Erosion Control.

3.5.1 Seeding, when required, shall be performed as ordered and in accordance with Section 644 .

3.5.1.1 Areas of the roadside which are to be left temporarily and which will be regraded or otherwise disturbed later during construction may be ordered to be

seeded with ryegrass to temporarily stabilize the area. The seed shall be sown at the rate of approximately 1 pound per 1,000 square feet.

3.6 Hay bales

3.6.1 Hay bales for erosion control shall be placed when ordered to provide for temporary control of erosion and/or sediment control and secured with two (2) hardwood stakes. Bales shall be removed or left in place as ordered.

3.7 Silt Fence.

3.7.1 Install and remove the silt fence as shown on the plans and as recommended by the manufacturer.

3.7.1.1 When two sections of silt fence adjoin each other, they shall be overlapped by 6 inches, folded, and stapled at a post

3.7.1.2 Support fence, when required, shall be fastened securely to the fence posts with staples or wire ties.

3.7.1.3 Filter fabric shall be fastened to the support fence, when support fence is required, with ties spaced every 2 feet longitudinally at the top, mid-section, and bottom.

3.7.1.4 Silt fence shall be embedded a minimum of 6 inches.

3.7.2 Care shall be taken to maintain the silt fence in a functional condition at all times during the construction period.

3.7.2.1 Silt fences shall be inspected immediately after each rainfall event and at least daily during prolonged rainfall. All deficiencies shall be immediately corrected.

3.7.2.2 Sediment deposits shall be inspected after every storm event and removed when deposits reach approximately 1/3 the height of the silt fence, or when "bulges" develop in the silt fence.

3.7.2.3 Silt fence fabric which has decomposed, has become ineffective or does not retain silt or suspended solids and is still needed, shall be replaced immediately.

3.7.3 Remove the silt fence, support stakes and support fence after all work has been completed and it is no longer needed or as ordered.

3.7.3.1 Sediment deposits shall be removed or left in place, if approved. After the silt fence has been removed, sediment deposits allowed to be left in place shall be graded to conform with the existing topography and shall be vegetated.

3.7.3.2 The silt fence will become the property of the Contractor upon completion of the project, unless otherwise ordered.

3.8 Storm Drain Inlet Protection - Gravel and Wire Mesh

3.8.1 Wire mesh or hardware cloth shall be laid over the grate inlet so that the wire extends a minimum of 1 foot beyond each side of the inlet structure.. If more than one strip of mesh is necessary, the strips shall be overlapped 6 inches.

3.8.2 Stone the wire mesh to a depth of stone of least 12 inches over the entire inlet opening. The stone shall extend beyond the inlet opening at least 18 inches on all sides.

3.8.3 Where curb inlets exist the wire mesh extend a minimum 12 inches beyond the curb inlet opening in all directions to cover the curb opening completely. Stone shall be piled against the wire so as to anchor it against the curb and inlet.

3.8.4 If the stone becomes clogged with sediment so that it no longer adequately performs its function, the stones must be pulled away from the inlet, cleaned and replaced.

3.9 Manufactured Devices

3.9.1 Devices shall be installed and maintained per the manufacturer's directions.

3.10 Erosion Stone.

3.10.1 Erosion stone shall be placed to provide for temporary control of erosion or sedimentation including stone checkdams, inlet control and stabilized construction entrances or where ordered. Upon acceptance of the Contract, the stone shall be removed as ordered.

3.11 Maintenance.

3.11.1 Erosion control features shall be maintained by the Contractor throughout the life of the project.

Method of Measurement

4.1 Monitoring SWPPP will be measured as a unit. This shall include all monitoring and monitoring report preparation.

4.2 The installation and maintenance of Erosion and Sedimentation Controls will be measured as a unit.

Basis of Payment

5.1 The accepted quantities of Monitoring SWPPP will be paid for at the Contract lump sum price.

5.1.1 Modifications of the plan will be subsidiary.

5.1.2 Travel time and other time not spent at the construction site and support services (i.e. travel expenses, clerical staff, copying, miscellaneous expenses, overhead) will be subsidiary to Item 645.1.

5.1.3 Erosion and Sediment Control and Stormwater Management items necessary to implement and maintain the Storm Water Pollution Prevention Plan (SWPPP) are subsidiary to Item 645.2

5.2 The accepted quantities Erosion and Sediment Controls for at the Contract lump sum price.

5.2.1 Specific costs incurred during the construction and maintenance of temporary erosion and sediment control, including repair of damaged or failed controls, shall be considered as part of the lump sum payment.

5.3 Removing and proper disposal of sediment deposits shall be subsidiary to Item 645.2

5.4 Erosion control measures including dust control required for stockpiles of materials subject to wind or water erosion shall be at the expense of the Contractor.

5.5 In case of failure on the part of the Contractor to control erosion, pollution, sedimentation, or implement the SWPPP monitoring, the Department reserves the right to employ outside assistance or to use its own forces to provide the necessary corrective measures. Such incurred direct costs plus project engineering costs and deduct the cost from money due the Contractor and/or withhold progress payments.

5.6 When no money is allocated in the proposal under this item, it is anticipated that this work will be of minor significance and will be the responsibility of the Contractor.

Pay Items and Units, Section 645 – Erosion And Sedimentation Control

645. 1	Monitoring SWPPP	Lump Sum
645.2	Erosion and Sedimentation Controls	Lump Sum

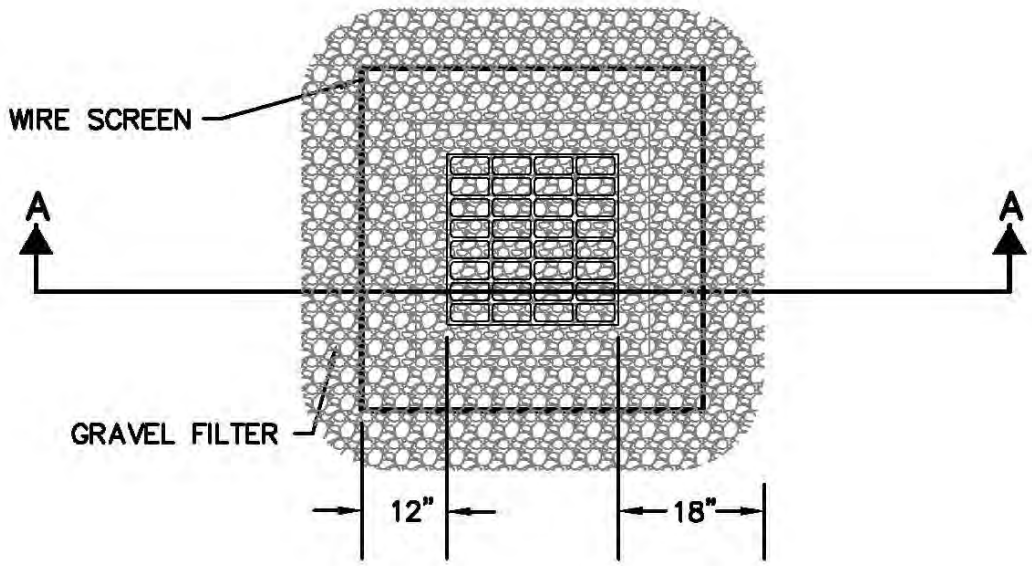

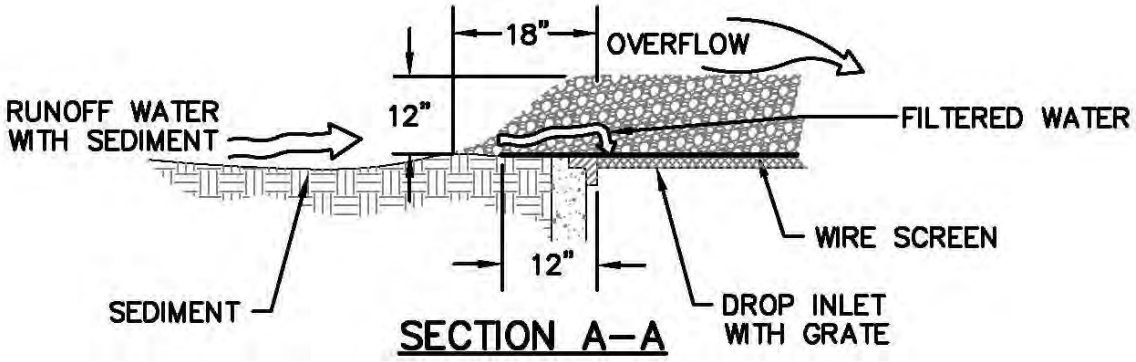

GRAVEL DROP INLET SEDIMENT FILTER

1. HARDWARE CLOTH OR WIRE MESH SHALL BE PLACED OVER THE GRATE AND CURB INLET OPENINGS AND EXTENDED AT LEAST 12 INCHES THE GRATE EDGE.

2. WELL GRADED CLEAN STONE (1' MIN, 3" MAX) SHALL BE PLACED ON TOP OF WIRE MESH TO A DEPTH OF 12 INCHES OVER THE GRATE.

GRAVEL DROP INLET SEDIMENT FILTER

S:\DWG\DETAILS\645-1 Gravel D.I. Sed Fltr.DWG

NOT TO SCALE

FIGURE 645–1

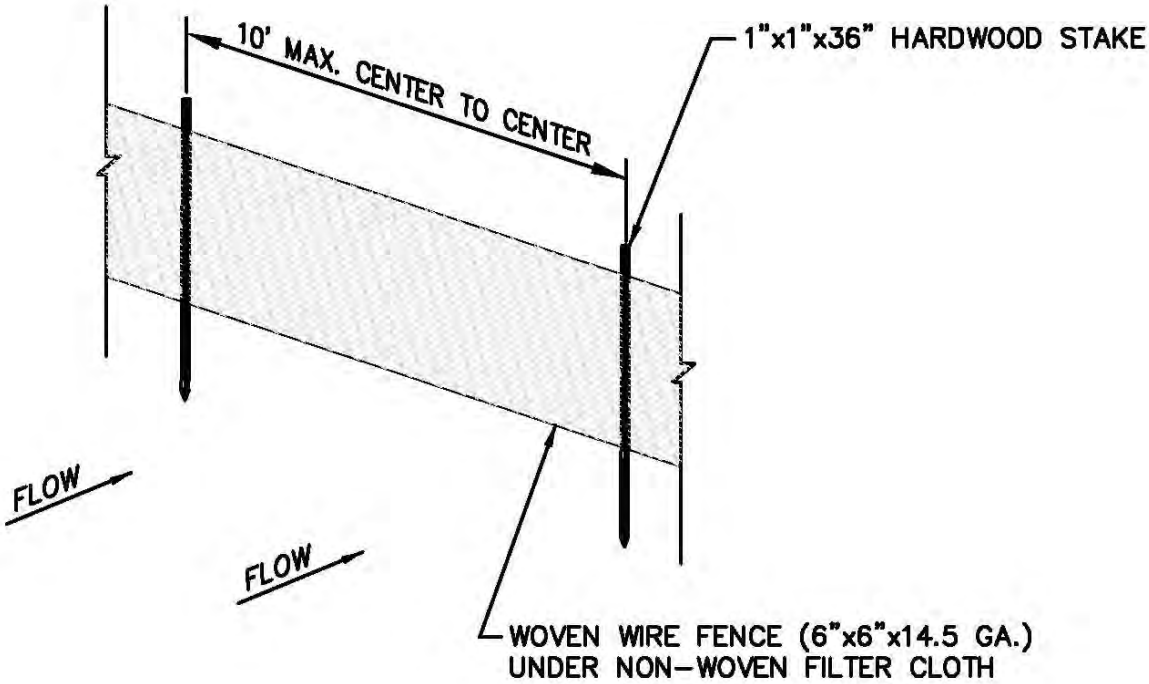

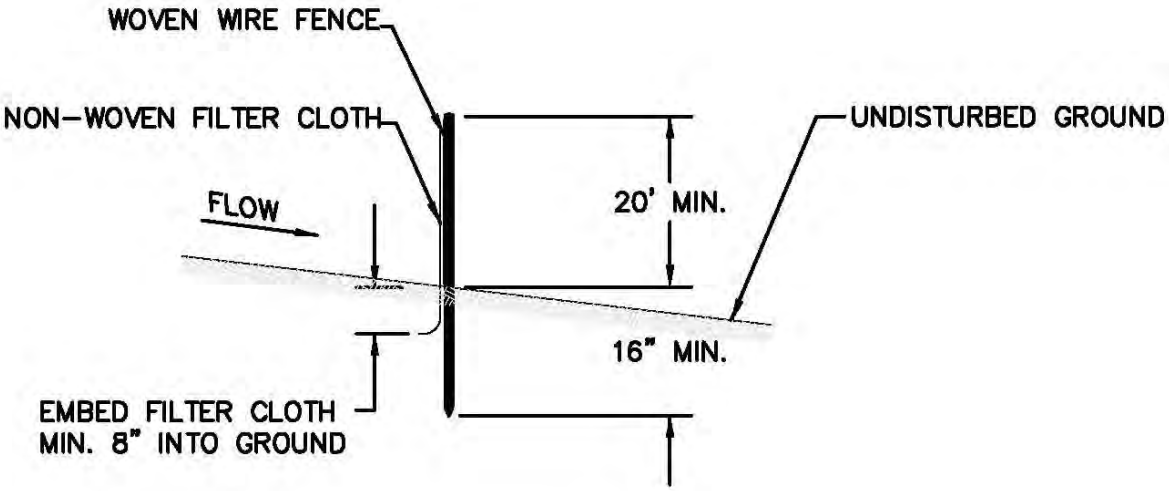

SILT FENCE DETAIL

S:\DWG\DETAILS\EROSION\645-2 SILTFENC.DWG

NOT TO SCALE

FIG. 645-2

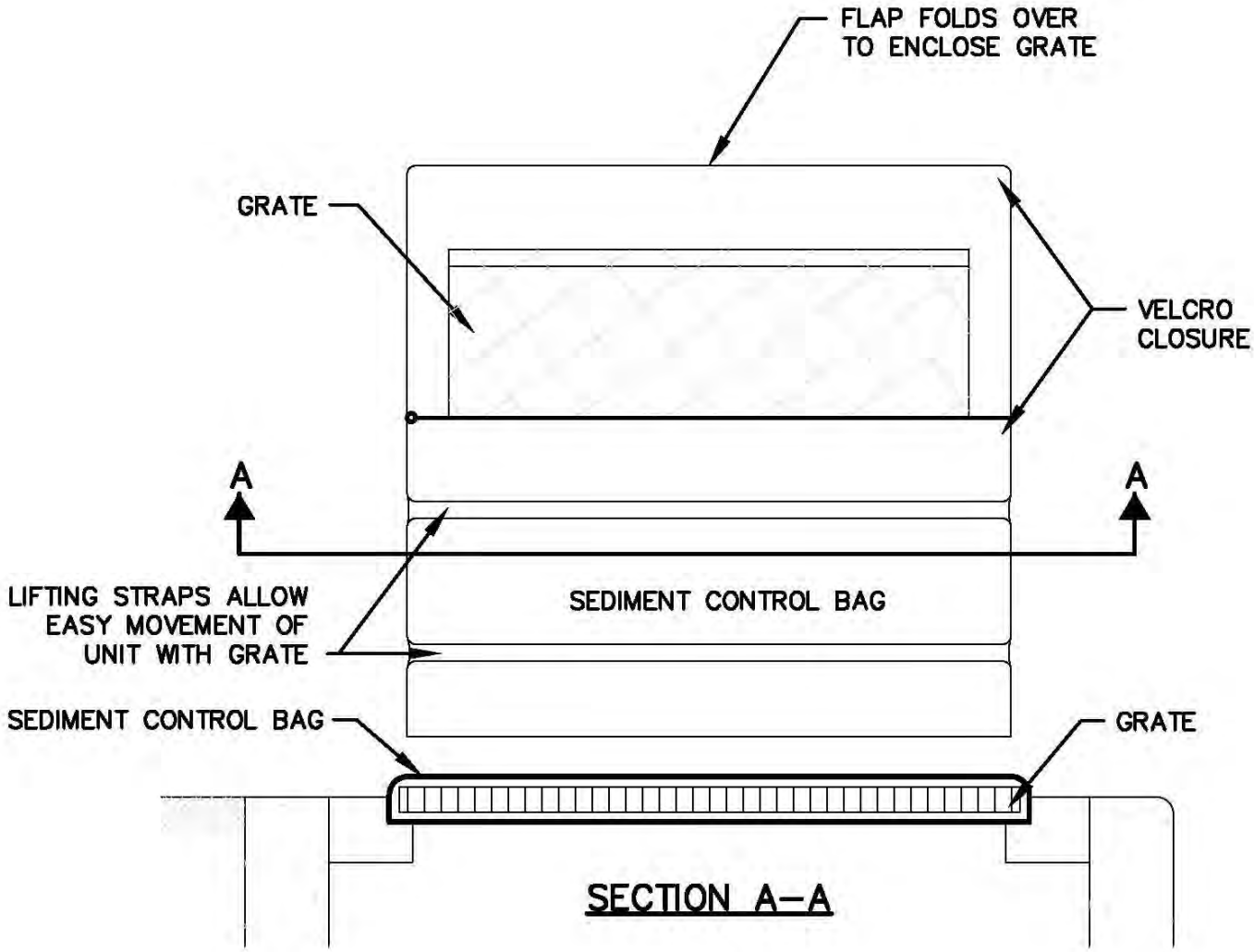

INSTALLATION:
STAND GRATE ON END. PLACE BAG OVER GRATE.
ROLL GRATE OVER SO THAT OPEN END IS UP.
PULL UP SACK.
TUCK FLAP INSIDE TO COMPLETELY ENCLOSE THE GRATE. BE SURE END OF GRATE IS COMPLETELY COVERED BY FLAP OR BAG WILL NOT WORK PROPERLY. HOLDING HANDLES, CAREFULLY PLACE BAG WITH GRATE INSERTED INTO CATCH BASIN FRAME.

MAINTENANCE:
WITH A STIFF BRISTLE BROOM OR SQUARE POINT SHOVEL, REMOVE SILT & OTHER DEBRIS OFF SURFACE AFTER EACH EVENT. REMOVE FINE MATERIAL FROM INSIDE ENVELOPE AS NEEDED.

SEDIMENT CONTROL BAG FOR CATCH BASIN

S:\DWG\DETAILS\EROSION\645-3 SED CNTRL BAG.DWG

NOT TO SCALE

FIGURE 645-3

SECTION 646 -- TURF ESTABLISHMENT

Description

1.1 This work shall consist of preparing the soil and furnishing and applying seed of the type or types specified, fertilizer, limestone, and mulch if required, on all areas designated for turf establishment as shown on the plans or ordered.

Materials

2.1 Limestone shall conform to Section 642.

2.2 Fertilizer shall be that for initial fertilization and shall conform to Section 643.

2.3 Seed shall conform to Section 644 using the type of mixture ordered.

2.4 Mulch shall conform to 645.2.1.

2.5 Mulch tackifiers shall be environmentally non-toxic.

Construction Requirements

3.1 Construction requirements shall conform to Section 643, Section 644 and Section 645 .

3.2 Application rate of limestone shall generally be 130 pounds per 1,000 square feet (approximately 3 tons per acre), unless otherwise ordered.

3.3 When mulch tackifiers are ordered to be used as tie- down or adhesive for mulch, it shall be used at the rate specified by the manufacturer, and applied uniformly over and through the mulch.

Method of Measurement

4.1 Turf establishment will be measured by the acre or by the square yard. Computations will be made to the nearest 0.01 of an acre or the nearest 0.1 square yard from measurements taken on the actual ground surface covered.

Basis of Payment

5.1 The accepted quantities of turf establishment will be paid for at the contract unit price per acre or square yard complete in place.

5.2 The material cost of additional seed ordered added to Slope Seed Type 44 will be paid for under extra work.

Pay Items and Units, Section 646 -- Turf Establishment:

646.1	Turf Establishment with Mulch	Acre
646.2	Turf Establishment without Mulch	Acre
646.3	Turf Establishment with Mulch & Tackifiers	Acre
646.4	Turf Establishment with Mulch	S.Y.
646.5	Turf Establishment without Mulch	S.Y.
646.6	Turf Establishment with Mulch & Tackifiers	S.Y.

SECTION 647 -- HUMUS

Description

1.1 This work shall consist of salvaging humus material encountered in the work or furnishing humus material from other sources, and placing the material at the locations shown on the plans or ordered.

Materials

2.1 Humus shall be the surface layer of natural workable soil containing organic matter, or material of a generally humus nature capable of sustaining the growth of vegetation, with no admixtures or refuse or material toxic to plant growth. It shall be free of all viable parts of invasive plants listed in Table 3800.1 of the New Hampshire Department of Agriculture, Markets & Food rule AGR 3800, relatively free from stones, lumps, stumps or similar objects larger than 2 inches in greatest diameter, sterile soil, roots, and brush. Ordinary sods of herbaceous growth such as grass and non-noxious weeds will be permitted. Muck, dry enough to be properly measured and spread may be used if it meets the above requirements, but the Engineer reserves the right to prohibit the use of muck which he considers may be or may become a fire hazard. If muck is accepted, extra limestone, sand, or humus material, shall be added as ordered by the Engineer.

Construction Requirements

3.1 The material shall be spread over the properly prepared areas to give a covering which will be approximately 3-1/2 inches thick, with generally not less than 3 inches or more than 4 inches, measured normal to the slope.

Method of Measurement

4.1 Humus material will be measured by the cubic yard. Slope measurements will be taken of the lengths and widths of the material in place and the volume will be computed by using the nominal depth of 3-1/2 inches.

Basis of Payment

5.1 The accepted quantity of humus will be paid for at the contract unit price per cubic yard complete in place.

5.1.1 Excavation required to undercut slopes in order to accommodate the material will be subsidiary.

Pay Items and Units, Section 647 -- Humus:

647.1	Humus	Cubic Yard

SECTION 648 -- SOD

Description

1.1 This works shall consist of furnishing and placing live grass sod, including sod gutters, as shown on the plans or ordered. This work shall also include any excavation necessary to place the sod.

Materials

2.1 Sod shall consist of an approved, dense, vigorous, well-rooted growth of commercial turf of perennial grasses indigenous to the area where it is to be used.

2.1.1 The sod shall be free from all viable parts of invasive plants listed in Table 3800.1 of the New Hampshire Department of Agriculture, Markets & Food rule AGR 3800, annual grasses, large stones or roots, or other materials harmful to growth, or which would interfere with mowing or future maintenance.

2.1.2 The soil shall be of such character that the sod will not break or crumble.

2.2 Pegs for holding shall be of sound wood approximately 3/4" square or round, and 8' to 10" long.

Construction Requirements

3.1 Sodding seasons. Unless otherwise permitted, sodding shall be done between April 1 and June 1, or between August 15 and October 15, but not when the ground or sod is frozen.

3.2 Cutting sod. The sod shall be cut with an approved sod cutter into strips of uniform width having minimum dimensions of 12" x 18". The sod shall be severed below the root line, shall have a uniform thickness and shall contain the majority of the feeding roots of grasses.

3.3 Site Preparation

3.3.1 Areas to be sodded shall be brought to grade with 4" of loam as shown or ordered, making allowance for the thickness of the sod.

3.3.2 As necessary, the soil shall be harrowed, tilled, or otherwise loosened to a depth of at least 2 inches to allow for mixing of the soil with the fertilizer and limestone.

3.3.3 The area shall be cleaned of large stones, roots, or other debris which might interfere with laying of the sod.

3.4 Laying Sod.

3.4.1 Sod shall be in a moist condition when laid and shall be placed on a reasonably moist bed. The sod shall be carefully placed and tightly fitted edge to edge. Any broken, damaged, or irregular shaped sod will be rejected.

3.4.2 On slopes, the sod shall be laid at right angles to slope, beginning at the bottom.

3.4.3 Transverse joints shall be staggered, and any unavoidable gaps shall be filled with sod plugs or loam.

3.4.4 All sod shall be tamped with an approved tamper or roller to insure tight joints and a smooth uniform surface.

3.4.5 The inlet edges of sod in waterways and other edges exposed to water scour shall be turned down and buried to a depth of 3 inches with tamped earth.

3.4.6 On slopes steeper than 4:1, every other line of sod shall be fastened with wooden pegs spaced 3 feet apart and driven flush with the surface of the sod.

3.4.7 Single lines of sod for anchoring loam on slopes greater than 4:1 shall be secured as 3.4.6.

3.4.8 After laying, all sod shall be watered immediately after rolling, and in the absence of rain watering shall be repeated daily until roots have grown into the soil (normal roots requires two to three weeks).

Method of Measurement

4.1 Sod will be measured along the slope, except that the width of gutters will be as shown on the plans or ordered. Dead sod will not be measured. Sod will be computed to the square yard.

Basis of Payment

5.1 The accepted quantity of sod will be paid for at the contract unit price per square yard complete in place.

5.2 Excavation required to complete this work will be considered as incidental to the items, but fertilizer, limestone, and loam ordered will be paid for under the respective items.

Pay Items and Units, Section 648 -- Sod:

648	Sod	Square Yard

SECTION 650 -- PLANTING -- GENERAL

Description

1.1 This specification includes general requirements that are applicable to all types of planting, including trees, shrubs, vines and ground cover plants, irrespective of type. Deviations from these general requirements will be indicated in the specific requirements for each type.

1.2 This work also includes furnishing and installing landscaping materials, including all layout, fertilizing, soil conditioning, staking, guying, watering, excavating mulching, weeding, herbicides, fungicides, pesticides, refertilizing as necessary, replanting as needed, and stake and guy removal after the establishment period, as shown on the plans or as ordered.

Materials

2.1 Plants.

2.1.1 General.

2.1.1.1 Plant material shall meet the current specifications of the "American Standard for Nursery Stock" as published by the American Association of Nurserymen unless otherwise specified.

2.1.1.2 All plants shall be first class and shall be representative of their normal species of varieties. All plants must have a good, healthy, well-formed upper growth and a large, fibrous, compact root system.

2.1.1.3 All plants shall be nursery grown stock that has been transplanted unless indicated as "seedlings", or root pruned at least once every 4 years. Plant hardiness shall be determined acceptable by the Engineer as specified relative to the zone of origin. A sworn affidavit as to region of growth shall be furnished when ordered.

2.1.1.4 Unless otherwise specified, so-called exposed or "bare-root" material will be accepted. Container grown plants may be furnished in lieu of balled and burlapped plants, provided they meet the current specifications in the American Standard for Nursery Stock.

2.1.1.5 Any non-bid substitution of plant material shall be acceptable only if the bid item(s) is unavailable. Requests for plant substitutions and proof of unavailability shall be furnished to the Engineer in writing.

2.1.2 Names and Marking.

2.1.2.1 All scientific and common plant names of the items specified shall conform with the current edition of "Hortus Third" compiled by the staff of the L.H. Bailey Hortorium, Cornell University. All plants delivered shall be true to name.

2.1.2.2 Each bundle, or each plant when not tied in bundles, shall be legibly and properly labeled. Care shall be taken throughout the operation to keep each plant species or variety segregated and labeled. The Engineer may reject at any time any plant material of questionable nomenclature.

2.1.3 Inspection

2.1.3.1 All plants shall be free from plant diseases and insect pests, and shall comply with all applicable State and Federal laws with respect to inspection for plant diseases and infestations.

2.1.3.2 All plant material shall be available for inspection in the nursery or collecting fields before it is dug. The Contractor shall provide a list of suppliers in sufficient time to allow the Engineer to inspect nurseries on a timely basis. Approval to move nursery material shall not be considered as final Acceptance. The Contractor shall notify the Engineer not less than 48 hours in advance of delivery of plants.

2.1.3.3 All planting stock shall conform to the laws of New Hampshire and shall be inspected before removal from the nursery, by authorized Federal, State, City or other authorities as may be required in the area where the nursery is located. The invoice or order for each shipment of plants shall contain the project name and number and the quantity and variety of plant material delivered. An inspection certificate shall certify that the plants are free of disease and insect pests of all kinds and shall accompany each shipment. Disease certificates and delivery slips shall be given to the Engineer upon arrival of the plant material at the point of delivery.

2.1.3.4 For purchase of material from nurseries within New Hampshire, information regarding inspection for plant disease and pest infestations is available from the New Hampshire Department of Agriculture. Inspection of plants from outside New Hampshire is controlled by the United States Department of Agriculture and information is available from the United States Department of Agriculture, Animal & Plant Health Inspection Service.

2.1.4 Digging, Handling, and Packing.

2.1.4.1 General. Plants shall be dug with care and skill. Special precautions shall be taken to avoid any unnecessary injury to, or removal of fibrous roots. Each species or variety shall be handled and packed in the approved manner for that particular plant. All precautions shall be taken to insure the arrival of the plants at the project site in good condition for successful growth.

2.1.4.2 Balled and burlapped plants. The ball shall be firm and, unless a manufactured ball is allowed, shall be composed of the original and undisturbed soil in which the plant has been grown. The plant shall be handled in such a manner that the soil in the ball will not drop away from the roots and will not cause stripping of the small, fine-feeding roots.

The ball shall be wrapped with burlap or other approved material and tightly laced to hold the desired shape. Plastic ball wrap material shall not be allowed. No balled plants will be accepted if the ball is cracked or broken. A substitute for burlap may be approved provided it can be demonstrated that the material is tight enough to retain the soil ball securely. During planting operations all burlap and like materials shall be removed to allow proper root growth.

2.1.4.3 Bare-root plants. The roots of bare-rooted stock shall be carefully packed in sphagnum moss, moist straw, or other suitable material that will insure the arrival of plants in an acceptable condition.

2.1.5 Shipment.

2.1.5.1 Arrangements shall be made as far as practical be to have plants delivered as the pits or beds are ready for them.

2.1.5.2 Plants which have heated or sweated at any time, or have broken, fractured, scraped or bruised, will be rejected.

2.1.5.3 All local, state or federal laws relative to the shipping of plants shall be strictly complied with.

2.1.6 Measurement.

2.1.6.1 Measurement will be made in accordance with the practice prescribed in the "American Standard for Nursery Stock" published by the current American Association of Nurserymen.

2.2 Blank.

2.3 Blank.

2.4 Layout marking material shall be clean 1 in. x 1 in. x 4 ft. high hardwood lumber stakes, wire type flagging, 1 in. (25 mm) minimum width plastic flagging or other approved material.

2.5 Plant supporting materials shall conform to the following unless otherwise specified.

2.5.1 Vertical stakes shall be hardwood lumber stakes or posts 2 in. x 2 in. minimum square or 1-1/2 in. diameter minimum round of the length required as shown on the plans. Hub stakes shall be 2 in. x 2 in. x 30 in. minimum square hardwood lumber.

2.5.2 Guy material for vertically staked trees shall be double strand 3/32 inch minimum diameter galvanized wire with wide, smooth and flexable approved tree guying material.

2.5.3 Guy material for hub staked trees shall be 3/16 in. minimum diameter galvanized wire with hose sleeves.

2.6 Rodenticides, herbicides and pesticides shall be those approved for use by the New Hampshire Pesticides Control Board.

2.7 Water used in the planting or care of vegetation shall be free from any substance injurious to plant life.

2.8 Antidesiccants shall be of an approved emulsion which will provide a film over plant surfaces, permeable enough to permit the exchange of gases but inhibit the passage of water vapor.

2.9 Fertilizer.

2.9.1 Fertilizer shall be a standard commercial grade fertilizer conforming to all State and Federal regulations and to the standards of the Association of Official Agricultural Chemists. The analysis shall represent respective percentages of nitrogen, phosphoric acid and potash.

2.9.1.1 All fertilizer shall be identified by labels and shall show the following:

(a) Guaranteed analysis.
(b) Name and address of the guarantor of the fertilizer.
(c) Type or brand.
(d) Net weight.

2.9.1.2 Dry fertilizer for other than acid-loving plants shall have an analysis of 10-6-4 (preferred), 10-3-6 or 10-5-5 or, with written permission, a substitute may be furnished. In any case, a minimum of 50 percent of the nitrogen shall be water-insoluble (50 percent WIN).

2.9.1.3 Water-soluble fertilizer shall be completely water soluble. Fertilizer for other than for acid-loving plants shall contain the following minimum percentages of available elements by weight: nitrogen -- 16 percent, phosphoric acid -- 19 percent, potash -- 16 percent. The total available nutrients shall be at least 55 percent by weight.

2.9.1.4 Fertilizer for acid-loving plants shall be formulated for acid-loving plants such as rhododendrons, azaleas and blueberries. Dry fertilizer for such plants shall have a minimum analysis of 7-7-7 or as approved. Water- soluble fertilizer for such plants shall have an analysis in the range of 21-7-7 or as approved.

2.10Soil Conditioners

2.10.1 Peat moss shall be air dried, granulated, sphagnum peat moss, nearly from woody substances, consisting of at least 75 percent of partially decomposed stems and leaves of sphagnum, and essentially brown in color. The texture may vary from porous fibrous to spongy fibrous and shall be free of sticks, stones, and mineral matter. Peat moss shall not show an acid reaction of less than 3.5 pH.

2.10.2 Peat humus shall be natural peat or peat humus from fresh water saturated areas, consisting of sedge, sphagnum, orreed peat, and shall be such physical condition that it will pass through a 1/2-inch mesh screen. The humus shall be free of sticks, stones, roots, and other objectionable materials. Samples taken at the source of supply shall meet the following requirements:

Acidity:	Not less than 4.0 pH.
Minimum water absorbing ability:	200 percent by weight on oven-dry basis.
Minimum organic content:	60 percent when dried at 221ºF

2.10.2.1 2.1.10.2.1 Freshly excavated peat, if saturated with water, shall be stored for a sufficient length of time to condition it for workability.

2.10.3 Humus material other than peat humus shall conform to Section 647 .

2.11 Mulches

2.11.1 Wood chips shall be obtained primarily from disease -free green hardwood, shall be 1/4 inch in nominal thickness, and 50 percent shall have an area of not less than one square inch nor more than six square inches. Not more than 2 percent shall consist of leaves, twigs, or shavings, and it shall be free of materials injurious to plant growth. Wood chip mulch must be approved prior to use. Where wood chips are specified, bark may only be used when permitted.

2.11.2 Bark mulch shall be bark chippings graded to be approximately 3/8 inches to 2 inches in width. The chippings shall not have been stored so long and under such conditions that the material has decomposed sufficiently so that it has lost its fibrous texture. Bark mulch must be approved as to grading and condition prior to its use. Where bark mulch is specified, wood chips may only be used when permitted.

2.11.3 Other mulch material may be used upon approval.

2.12 Loam Backfill.

2.12.1 Loam backfill shall be relatively free of roots or rhizomes of witchgrass. No sticks, sods, clods or other material which would tend to form large air pockets in the soil shall be included. The use of muck will not be permitted around any plantings.

2.12.2 Loam backfill shall have minimum and maximum pH values of 6.0 and 7.6. Organic matter, as determined by loss by ignition shall be from 6 percent to 20 percent. Natural topsoil with a pH over 4.5 and over 4 percent organic may be amended to meet these specifications.

2.12.3 A loam source will be sampled and tested by the Engineer so that the results are obtained at least three days prior to planting and prior to the addition of soil amendments. Planting shall not begin prior to loam approval.

2.12.4 After the test results are known, amendments shall be made, when necessary, to meet the minimum pH and organic standards.

2.12.5 To each cubic yard of accepted loam, the following shall be added and thoroughly mixed to produce loam backfill: 2 to 3 cubic feet of well rotted cow manure (dehydrated cow manure at a rate specified by the Engineer); 4 cubic feet of sphagnum peat moss; 15 pounds of 10-6-4 fertilizer minimum 50 percent water insoluble (WIN); and 20 pounds of ground agricultural limestone.

2.12.5.1 When permitted, individual components of the loam backfill may be added directly to the approved plant pits.

2.12.5.2 Batch size for mixing shall be determined by the Engineer, typically 15 cubic yards.

Construction Requirements

3.1 Planting Seasons.

3.1.1 Unless otherwise directed, seasons for planting shall be within the following dates:

Deciduous/ Evergreen Material:	
Spring -	April 1 to June 30
Fall -	August 15 to November 15

3.1.2 Preparations for planting may begin earlier than the specified season, and if approved, planting work may continue beyond the specified time limits. However, the Engineer may require that all plants planted out of season, except deciduous material planted prior to April 1 and after November 15, shall be balled, burlapped and dead or damaged branches pruned.

3.1.3 No planting shall be done when the site or weather is unsatisfactory for planting, unless permitted.

3.2 Delivery and Inspection.

3.2.1 A preliminary check will be made of all plants at the time of delivery for condition of the plants and general conformity to the specifications. A more thorough inspection of individual plants will be made just prior to planting. No plants shall be planted which have not received this inspection. In order to facilitate this inspection, the Contractor shall inform the Engineer, at least 24 hours in advance, as to what plants are to be planted and in what

location. Any plants which are planted without receive in this inspection will be rejected and, if rejected must be removed and replaced with inspected stock.

3.2.2 Due to the difficulty of identifying dormant plants and to the effect to of handling on the health and vigor of plants, only conditional approval will be given to plants in preliminary and intermediate inspections. Inspection will continue throughout the life of the Contract up to the time of final Acceptance. Plants discovered at any time which are not true to name, do not conform to the specifications, show evidence of improper handling or lack of proper care, or which appear to be in a seriously unhealthy condition for any other reason must be removed from the project site at once and replaced by acceptable plants as soon as the planting season allows.

3.2.3 At least 3 days before digging any collected or plantation-grown material, the Contractor shall notify the Engineer of the time and place of digging so that inspection of the work and of the material can be made by the Engineer.

3.3 Protection and Temporary Storage.

3.3.1 The Contractor shall keep all plant material moist and protected from drying out. Protection shall be provided during the time the plants are in transit, in temporary storage, or on the project site awaiting planting.

3.3.2 Unless otherwise approved by the Engineer, plants delivered, but not scheduled for immediate planting, shall be protected as follows:

(a) Bare-root plants shall be heeled-in in moist soil in a satisfactory manner. All plants heeled-in shall be properly maintained by the Contractor until planted.

(b) Balled and burlapped plants shall have the earth balls covered with wood chips or other suitable material and shall be kept in a moist condition.

3.3.3 The Contractor shall exercise the utmost care in loading, unloading or handling of plants to prevent injuries to the branches or to the roots of the plants. The solidity of balled and burlapped plants shall be carefully preserved.

3.3.4 While plants with exposed roots are being transported to and from heeled-in beds, or are being distributed in planting beds, or are awaiting planting after distribution, the Contractor shall protect the roots from drying out by means of wet canvas, burlap or straw, and watering, if necessary. The means employed shall be satisfactory and shall depend on weather conditions and the length of time the roots must remain out of the ground.

3.3.5 Stock left out of the ground unprotected overnight or left with roots exposed to the sun, or otherwise unprotected during transit, unloading, heeling-in or planting will be rejected.

3.4 Layout.

3.4.1 The Engineer may adjust plant material locations to meet field conditions. Plant material locations and bed outlines shall be staked on the project site by the Engineer with the assistance of one contractor employee. Stakes or other approved markers shall be furnished by the Contractor upon request of the Engineer.

3.4.2 Prior to the start of active work on the project, the Contractor shall provide a planting sequence schedule to be used in establishing priorities in laying out plant locations. The Contractor shall give at least 2 days advance notice of any deviations from this schedule. The Engineer will not be responsible for any delay or inconvenience resulting from the Contractor's failure to follow the above procedure.

3.4.3 An artificial appearance in the layout scheme is generally not desired. Except where uniform spacing may be required, as in the case of snow-control planting and the like, some variation in spacing is essential and care must be taken to avoid straight lines and uniform spacing.

3.5 Excavation.

3.5.1 Excavation for plant pits shall not begin before the approved loam backfill is available on the project.

3.5.2 Holes for plant material shall be excavated at the indicated locations and shall be a minimum width or 2 times the root ball diameter. The width of planting pit shall be double that of the root system or ball. Plant pit requirements are shown on the planting detail sheet.

3.5.2.1 Trenching may be ordered for special sites such as long narrow medians. Trenches shall be the same depth of the root ball/potted container. The width of the trench shall be double of the root system or ball.

3.5.3 Surplus excavated material or material unsuitable for backfill or saucer construction shall be removed from the site as soon as practicable or disposed of as ordered.

3.5.4 When rock or boulders over 1/3 cubic yard in size are encountered in digging plant pits, the Contractor shall notify the Engineer, who will change the location of the plants. No excavation of rock or boulders over 1/3 cubic yard in volume will be required.

3.5.5 If topsoil on the planting site is acceptable as loam, the topsoil encountered in the excavation may be used for loam backfill when it is kept separate from the subsoil. Soil amendments may be required. See 2.12.4.

3.5.6 In certain areas of poor drainage or heavy soil, the Engineer may require that the soil excavated from the plant pit be spread on the ground adjacent to the pit and neatly distributed so as to raise the grade of the area to provide better surface drainage. Where shown on the

plans or directed, such pits may also require ditches. When ditches are required, they shall be included as a part of the cost of the plant. Beds constructed by trench method must be raised sufficiently to permit drainage to flow alongside and into the bed.

3.5.7 Where permitted, bare-root evergreens such as seedlings or transplants may be planted in the existing soil. Plant holes must be deep enough to allow room for the full depth of the root without doubling, folding, or pruning, and wide enough to allow room for its normal spread. Plants must be set straight and at the same depth at which they were previously growing. Soil must be firmly compacted about the roots, leaving no air pockets. In heavy grass the Engineer may require that the sod be removed or folded back to a distance of 4 to 6 inches from the main stem of each plant, or require herbicide treatment in advance of planting.

3.6 Setting Plants.

3.6.1 General.

3.6.1.1 Plants shall be set to depths appropriate to the various types of material, local drainage and the special requirements of each. In general, plants shall be placed on backfill that has been firmly settled so that the root crown is even with or slightly higher than the ground level. Roses and budded or grafted plants shall be set at least 3 inches below their previous earth line or as directed.

3.6.1.2 All trees and shrubs shall be planted plumb and on grade with the root flare.

3.6.1.3 As shown on the planting details, the ground around the plants shall be graded and rims shall be constructed at the edge of the plant pit for each plant, forming a saucer capable of holding sufficient water to give the root system a good soaking. Saucer rims shall be tamped so as to be durable enough to allow several years of watering if necessary. To prevent the growth of weeds and noxious grasses, the rims shall be constructed from soil removed from the plant pits. Imported loam for backfill shall not be used in the construction of the plant saucer rims and every effort shall be made to prevent spillage of loam in the planting area.

3.6.2 Planting and Backfilling Bare-Root Plants.

3.6.2.1 Prepared backfill soil shall be placed in the plant pit to required minimum depth and very slightly tamped. Plants shall then be placed in the center of the pit and roots properly spread out in a natural position. All broken or damaged roots shall be cleanly cut back to sound root growth.

3.6.2.2 Backfill soil shall then be carefully worked around and over the roots, with thorough watering. Care shall be taken to avoid the bruising or breaking of roots.

3.6.3 Planting and Backfilling Balled and Burlapped Plants.

3.6.3.1 Plants of this type shall be handled and placed in holes in such a manner that they soil of the ball will not be loosened. After the hole has been partly backfilled and the soil watered under and around the ball, the burlap and ties shall be cut away and removed to avoid girdling, and the remaining burlap slit on all sides and adjusted to prevent the formation of air pockets. Backfilling and watering shall then be completed in a manner to avoid loosening the soil of the root ball.

3.6.4 Planting and Backfilling Potted Plants.

3.6.4.1 All containers shall be carefully removed prior to planting. Pot-bound material shall be subject to rejection if proper root pruning cannot be accomplished in a manner acceptable to the Engineer.

3.7 Fertilizing.

3.7.1 Initial fertilization shall consist of the use of dry fertilizer, water-soluble fertilizer or a combination of both as permitted.

3.7.1.1 Dry fertilizer, when not included in the loam backfill, including fertilizer for acid-loving plants as appropriate, shall be uniformly mixed with the loam used as backfill about the plants at the following rates:

(a) Trees: 1½ pounds per inch of caliper.
(b) Shrubs: ¼ pound per foot of height.
(c) Vines: ½ pound per vine.

3.7.1.2 Water-soluble fertilizer, when ordered by the Engineer, including fertilizer for acid-loving plants as appropriate, shall be dissolved in water at the rate recommended by the manufacturer. The thoroughly mixed solution shall be applied at the time of initial planting after the water used for backfill soaking has leached away. Care shall be taken to prevent washing plant saucers away either during the original watering or while applying water- soluble fertilizer.

3.7.1.2.1 The fertilizer solution shall be applied at the following rates:

(a) Seedling plants, except coniferous: 1 pint per plant.
(b) Plants up to 2 feet in height shall receive 4 quarts.
(c) Plants over 2 feet and up to 6 feet shall receive 6 quarts.
(d) Plants over 6 feet and up to 12 feet shall receive 12 quarts.
(e) Plants over 12 feet shall receive 16 quarts.

3.7.2 Refertilization.

3.7.2.1 Unless otherwise ordered, up to two refertilizations shall be done using a water-soluble fertilizer applied in conjunction with watering or by itself. No refertilization will be allowed between August 1 and plant dormancy and between frozen ground and April 1.

3.7.2.2 All plants except seedlings and root plantings shall be fertilized at least once between April 1 and August 1 with water-soluble fertilizer mixed and applied in accordance with 3.7.1.2 or as directed when applied with a watering. Dry fertilizer for acid-loving plants may be used for such plants provided it is dissolved insufficient water to make a workable solution and the solution is applied around the outside drip line of the branches at the rate of 1/4 pound per foot of height of shrub.

3.7.2.3 When the contract period extends spring to spring, all plants except seedlings and root cutting shall receive an additional application of fertilizer in the spring prior to final acceptance.

3.8 Watering.

3.8.1 3.8.1 Watering equipment shall be on the project prior to planting and shall be available at any time during the life of the project. This equipment shall provide enough water to thoroughly soak the plant material root systems for the entire project within 48 hours. Watering equipment shall be equipped with a regulating device on the end of the hose to provide the operator with the ability to control the flow and pressure of water. Plants shall be watered immediately following planting, preferably when two-thirds of the backfill has been placed so all air pockets are removed and the plant properly set. Then a later watering to thoroughly soak the root system shall be performed within 24 hours of planting. Thereafter, watering shall be done every week throughout the growing season unless otherwise directed.

3.9 Guying and Staking.

3.9.1 All trees shall be guyed in a taut manner or firmly staked in accordance with the details shown on the plans as soon as the plant is in place. Guy material shall be loosely secured to the tree to provide for growth of the trunk and allow approximately 1 inch sway in the tree. Hub stakes shall not protrude more than 8 inches above the ground..

3.10 Antidesiccant Spray.

3.10.1 Antidesiccant spray shall be used when directed.

3.11 Pruning.

3.11.1 Pruning shall be done preferably before or immediately after planting in such a manner as to preserve the natural character of each plant. Dead and damaged branches shall

be removed. All pruning shall be done by experienced personnel with properly conditioned equipment and in keeping with accepted horticultural practice.

3.12 Mulching.

3.12.1 Within 48 hours of planting a plant, unless a longer period is allowed, mulch material shall be furnished and placed over all pit or saucer areas of individual trees, shrubs and vines, and over the entire area of shrub beds to the depth indicated on the plans. Mulch material shall either be bark mulch or wood chips. Saucers shall be inspected prior to placement of mulch or chips.

3.13 Restoration and Cleanup.

3.13.1 Where existing grass areas have been damaged or scarred during planting operations, the disturbed areas shall be restored to their original conditions as directed at no additional cost to the Department. Mowing may be required when directed by the Engineer to insure complete slope restoration. All debris, spoil piles, containers and the like shall be cleaned up and the project left in an acceptable condition after each planting season. All slopes shall be left in a smooth condition with ruts and excavate soils removed and areas regraded as required.

3.14 Establishment Period.

3.14.1 The acceptability of the plant material furnished and planted as specified will be determined at the end of the establishment period. The period of establishment shall begin as soon as all plants are planted and shall extend for 1 year or until the date of final acceptance, whichever date is later. During the period, the Contractor shall employ all possible means to preserve the plantings in a healthy condition including: watering, weeding, pesticide application, pruning, repairing saucers and adding mulch, adjusting guys and stakes, replacement of unacceptable plants, together with such other work as may be ordered. Weeding shall be a minimum of 1 foot beyond the limit of the saucers. At the end of the establishment period, all guys, stakes, and hubs shall be removed, unless otherwise directed.

3.14.2 An inspection will be made by the Contractor and the Engineer immediately prior to or early in the planting season following the original planting season to determine the condition of the plant material. Dead plants, diseased plants, plants lacking sufficient vigor, or plants showing evidence of sizable die-back will require replacements. Unacceptable plant material must be removed promptly from the project.

3.14.3 The Engineer may require that replacement plants that are not dormant or that are planted late in the planting season shall be sprayed as directed with an approved antidesiccant.

3.14.4 Except as provided in 2.1.1.5, all replacement plantings shall be of the same kind and size as originally specified. The use of more loam and more initial fertilizer may be waived

by the Engineer; otherwise, replacement plantings shall be handled, planted and maintained in the same manner specified for the original plantings.

3.15 Herbicides, Insecticides and Fungicides.

3.15.1 The Engineer may order, or the Contractor may request, the use of an approved herbicide at planting locations when it is determined that the chemical control of weeds is necessary.

3.15.2 The Engineer may order, or the Contractor may request the use of a suitable insecticide or fungicide when it is determined that infestations of insects or plant disease require the use of such material.

3.15.3 All herbicides, insecticides and fungicides shall be applied as prescribed by their manufacturer and in accordance with New Hampshire laws. The Contractor shall either possess from the New Hampshire Pesticide Control Board the proper registrations and permits for the application of such materials or have the applications made by an approved, qualified firm holding such registrations and permits. Copies of all permits in connection with such materials shall be furnished to the Engineer. All pesticide application within the right-of-way will require a special permit from the New Hampshire Department of Agriculture, Division of Pesticide Control.

3.16 Protection Against Rodents.

3.16.1 Rodent protection is a required part of plant care during the life of the Contract. An approved rodenticide shall be used on all plants that are susceptible to rodent damage. Approval for the proposed rodenticide and for the method of application must be obtained from the New Hampshire Department of Agriculture, Division of Pesticide Control and copies of the approval shall be furnished to the Engineer.A mixture of wood alcohol and rosin may be used in the absence of an approved rodenticide at a ratio as determined by the Engineer.

Method of Measurement

4.1 Plant material will be measured by the number of units of plants in healthy condition, of the specified sizes and species, furnished and planted.

4.2 Landscaping will be measured as a unit. A unit will include furnishing and installing landscaping materials, including all layout, fertilizing, soil conditioning, staking, guying, watering, excavating, weeding, herbicides, fungicides, pesticides, refertilizing as necessary, replanting as needed, and stake and guy removal after the establishment period, as shown on the plans or as ordered.

4.3 Mulch and woodchips placed to the depth specified will be measured by the square yard, complete in place.

Basis of Payment

5.1 All work performed will be paid for as provided under the appropriate Section 651 through Section 658 in accordance with the following schedule for partial payments:

(a) Upon approval of all work in connection with initial planting of each species delivered, including watering, guying, stacking and mulching, 90 percent of the accepted quantity of each species may be paid.
(b) Upon completion of the replacement of all plant matter so ordered an additional five percent of all species may be paid.
(c) The balance of all acceptable trees not paid previously, will be paid after the final acceptance.

5.2 When substitutions are approved, payment will be by supplementary agreement.

5.2.1 Any non-bid substitution of collected stock as described in 2.1.1.5 will be subject to a price reduction of 25%.

5.3 Excessive damage due to heavy insect infestation, if all reasonable precautions are taken by the Contractor, will be reason for consideration of extra payment for approved replacements.

5.4 The accepted quantity of landscaping unit will be paid for at the Contract lump sum price complete in place.

5.4.1 The Contractor shall submit a "Bill of Materials" for approval in accordance with 104.02 at least three weeks prior to starting the landscaping item. The "Bill of Materials" shall include a unit price breakdown of planting materials. Once approved, this list will be used as a basis to adjust the landscaping item if substitution of plant material is required.

5.4.1.1 Anticipated shortages in any particular plant material shall be brought to the attention of the Engineer. Upon such discovery, the Contractor shall promptly request plant material substitution in writing. The Contractor shall also submit the price of the proposed substitute material.

5.4.1.2 Upon approval of the substitute plant material, the Engineer will adjust the unit price, either increase or decrease, by multiplying the number of substituted plants by the difference between the base plant price and the substituted plant price. The result will then be divided by the unit price to come up with the new adjusted unit.

5.5 The accepted quantity of mulch or woodchips placed to the depth specified will be paid for at the contract unit price, complete in place.

5.5.1 When no pay item is provided for mulch or woodchips, the work shall be subsidiary to Item 650.2.

Pay Items and Units, Section 650 -- Planting -- General:

650.2	Landscaping	Unit
650.3_	Bark Mulch, _ inches deep	Square Yard
650.4_	Wood Chips, _ inches deep	Square Yard

SECTION 651 -EVERGREEN TREES

Description

1.1 This work shall consist of furnishing and planting evergreen trees of the specified size and type at the locations shown or as ordered.

Materials

2.1 Materials shall conform to the requirements of Section 650 .

Construction Requirements

3.1 Construction requirements shall be as prescribed in Section 650

Method of Measurement

4.1 Evergreen trees will be measured as prescribed in Section 650 .

Basis of Payment

5.1 The accepted quantities of evergreen trees will be paid for at the Contract unit price per each for trees of the specified sizes and species complete in place.

Pay Items and Units, Section 651 -Evergreen Trees:

651.__	(Specific Evergreen Tree)	Each

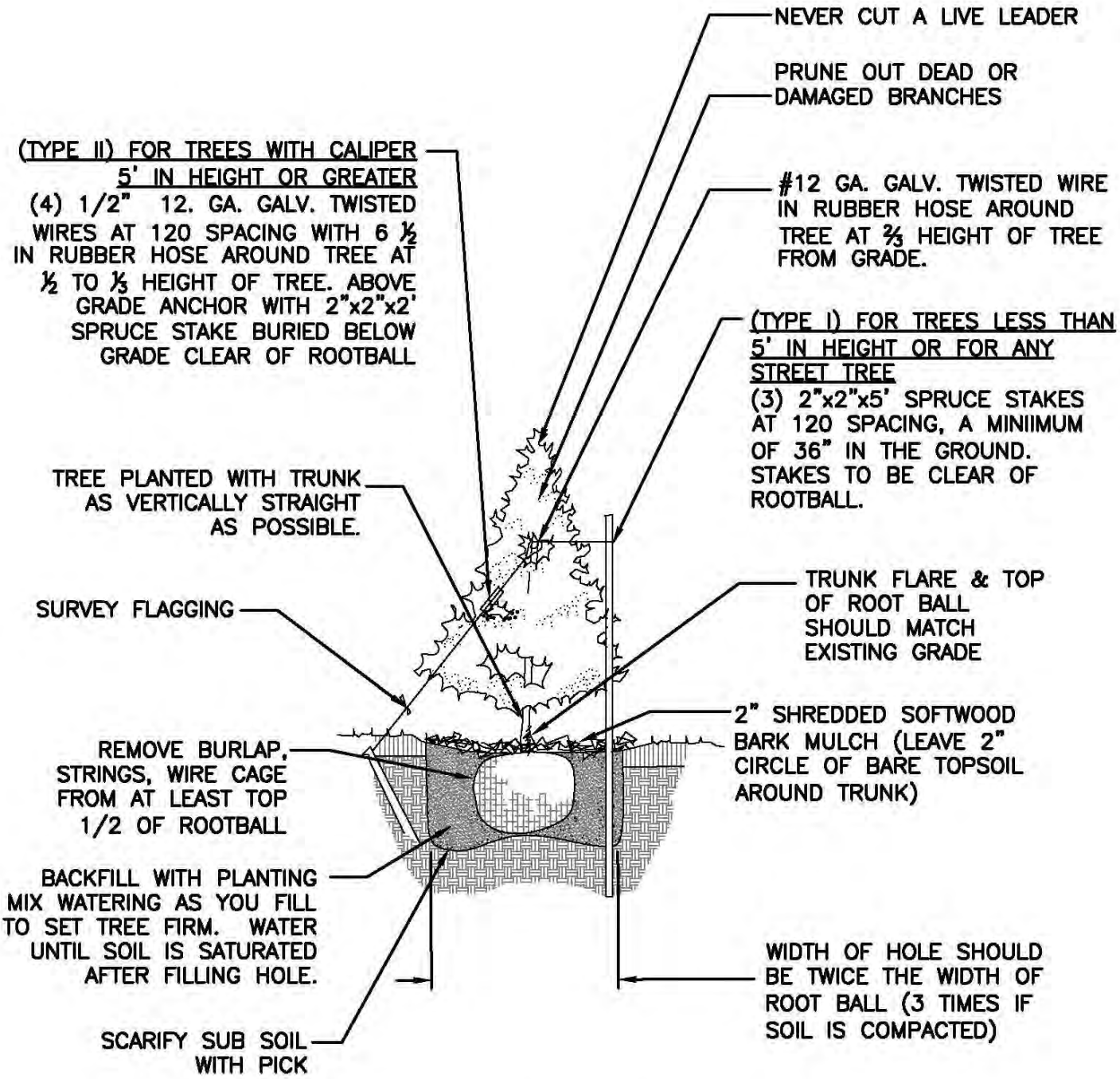

EVERGREEN TREE PLANTING DETAIL

S:\DWG\DETAILS\651-1 EVERGRN TREE

NOT TO SCALE

FIGURE 651-1

SECTION 652 - DECIDUOUS TREES

Description

1.1 This work shall consist of furnishing and planting deciduous trees of the specified size and type at the locations shown or as ordered.

Materials

2.1 Materials shall conform to the requirements of Section 650 .

Construction Requirements

3.1 Construction requirements shall be as prescribed in Section 650

Method of Measurement

4.1 Deciduous trees will be measured as prescribed in Section 650 .

Basis of Payment

5.1 The accepted quantities of deciduous trees will be paid for at the Contract unit price per each for trees of the specified sizes and species complete in place.

Pay Items and Units, Section 652 - Deciduous Trees :

652.__	(Specific Deciduous Trees)	Each

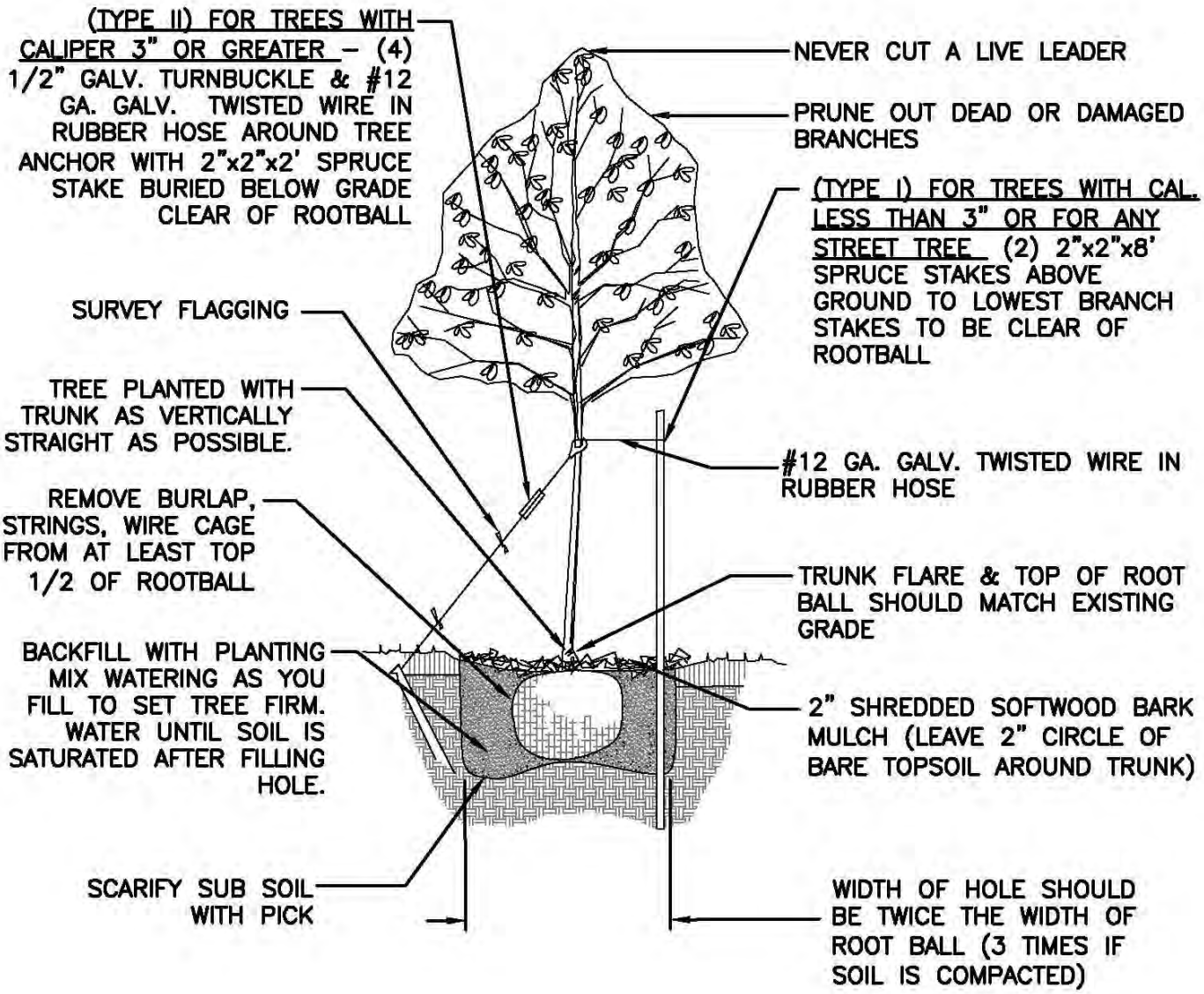

DECIDUOUS TREE PLANTING DETAIL

S:\DWG\DETAILS\PARKS\652-1 DECID TREE

NOT TO SCALE

FIGURE 652-1

SECTION 654 – EVERGREEN SHRUBS

Description

1.1 This work shall consist of furnishing and planting evergreen shrubs (needle and broadleaf) of the specified size and type at the locations shown or as ordered.

Materials

2.1 Materials shall conform to the requirements of Section 650 .

Construction Requirements

3.1 Construction requirements shall be as prescribed in Section 650 and when directed, shrubs shall be guyed in the same manner as trees, as prescribed in 650.3.9.1

Method of Measurement

4.1 Evergreen shrubs will be measured as prescribed in Section 650 .

Basis of Payment

5.1 The accepted quantities of evergreen shrubs will be paid for at the Contract unit price per each for shrubs of the specified sizes and species complete in place.

Pay Items and Units, Section 654 – Evergreen Shrubs:

654.__	(Specific Evergreen Shrub)	Each

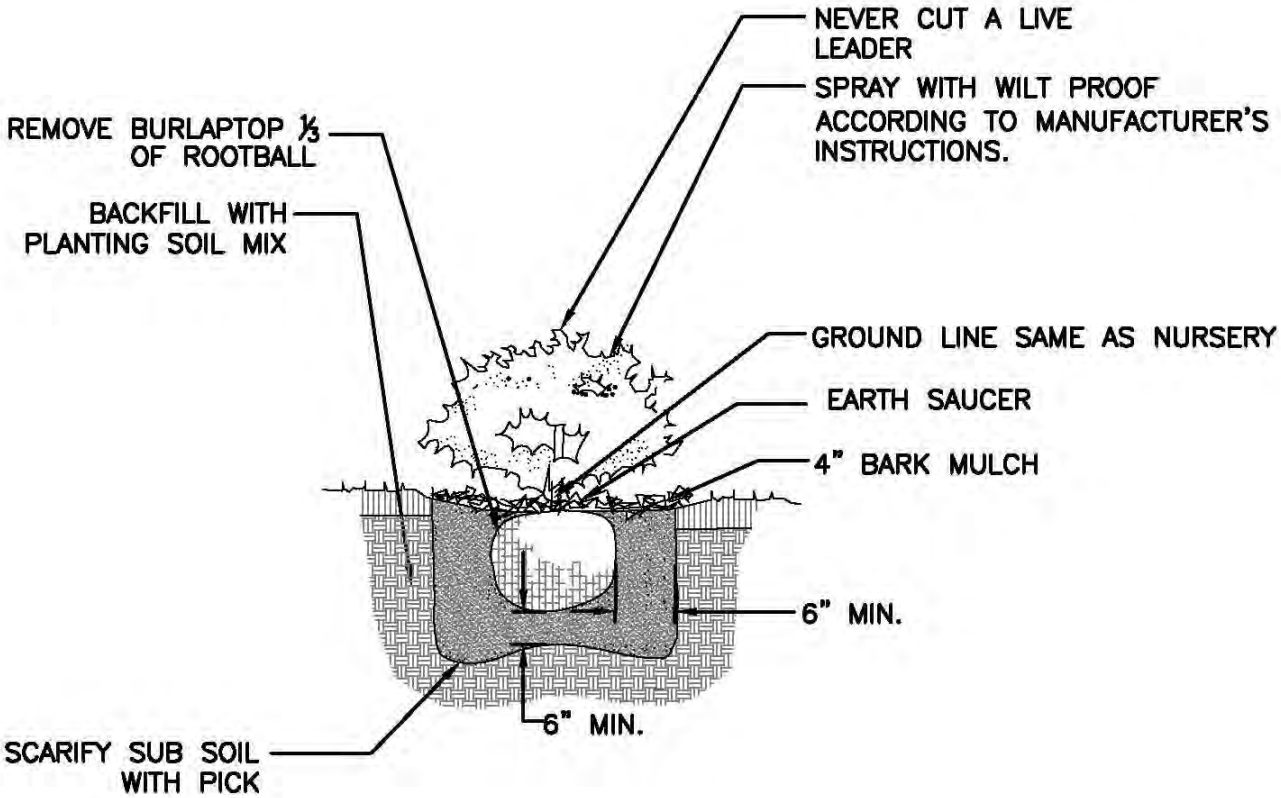

EVERGREEN SHRUB PLANTING DETAIL

S:\DWG\DETAILS\PARKS\654-1 EVERGRN SHRUB

NOT TO SCALE

FIGURE 654-1

SECTION 655 -- DECIDUOUS SHRUBS

Description

1.1 This work shall consist of furnishing and planting deciduous shrubs of the specified size and type at the locations shown or as ordered.

Materials

2.1 Materials shall conform to the requirements of Section 650 as amended below.

Construction Requirements

3.1 Construction requirements shall be as prescribed in Section 650 as amended below.

3.2 Deciduous shrubs shall be pruned in the same manner as specified for trees in accordance with 650.3.11, except that sumac shrubs shall not be pruned in the fall

Method of Measurement

4.1 Deciduous shrubs will be measured as prescribed in Section 650 .

Basis of Payment

5.1 The accepted quantities of deciduous shrubs will be paid for at the Contract unit price per each for shrubs of the specified sizes and species complete in place.

5.1.1 Hay mulch used in connection with any planting will be subsidiary

Pay Items and Units, Section 655 -- Deciduous Shrubs:

655.__	(Specific Deciduous Shrub)	Each

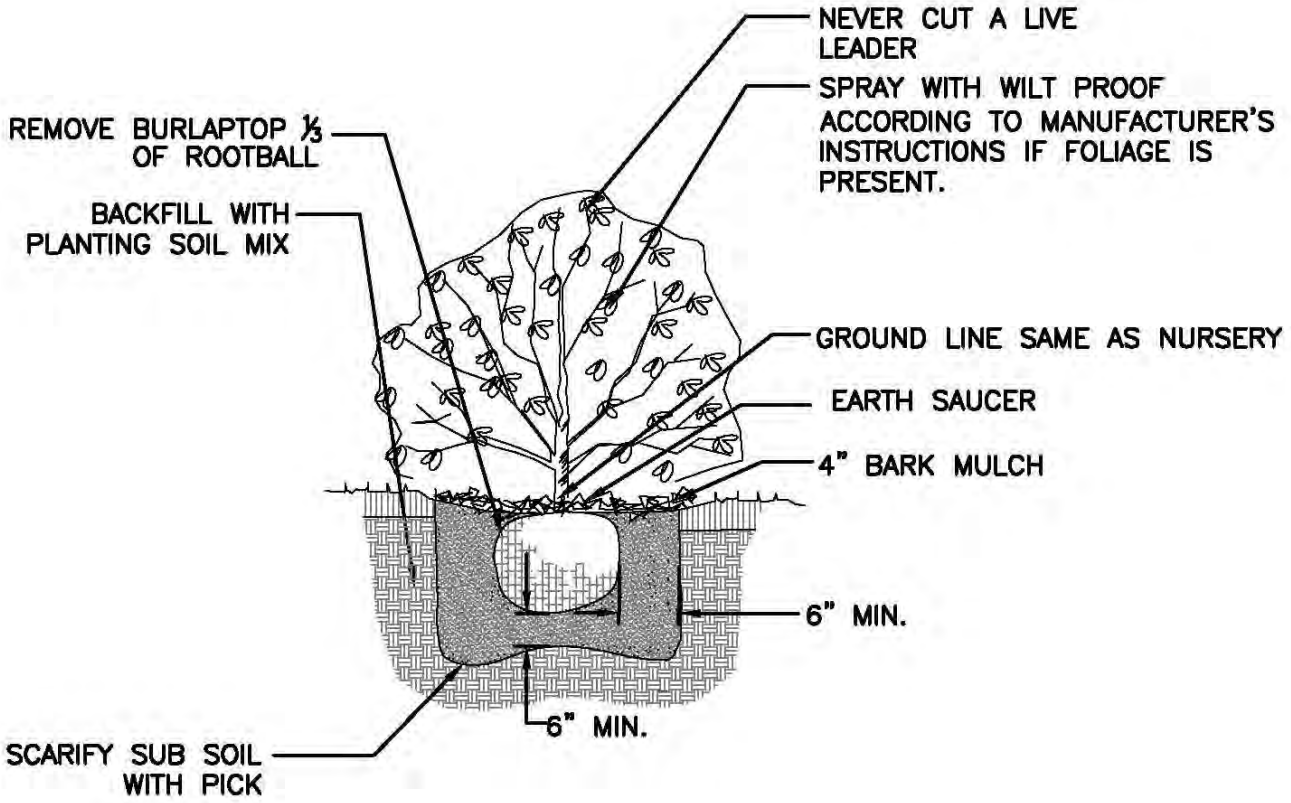

DECIDUOUS SHRUB PLANTING DETAIL

S:\DWG\DETAILS\PARKS\655-1 DECID SHRUB

NOT TO SCALE

FIGURE 655-1

SECTION 657 -- VINES AND GROUND COVERS

Description

1.1 This work shall consist of furnishing and planting vines and ground covers of the specified size and type at the locations shown or as ordered.

Materials

2.1 Materials shall conform to the requirements of Section 650

Construction Requirements

3.1 Construction requirements shall be as prescribed in Section 650 .

Method of Measurement

4.1 Vines and ground covers will be measured as prescribed in Section 650 .

Basis of Payment

5.1 The accepted quantities of vines and ground cover will be paid for at the Contract unit price per each for vines or ground cover of the specified sizes and species complete in place.

Pay Items and Units, Section 657 -- Vines And Ground Covers:

657.__	(Specific Vine or Ground Cover)	Each

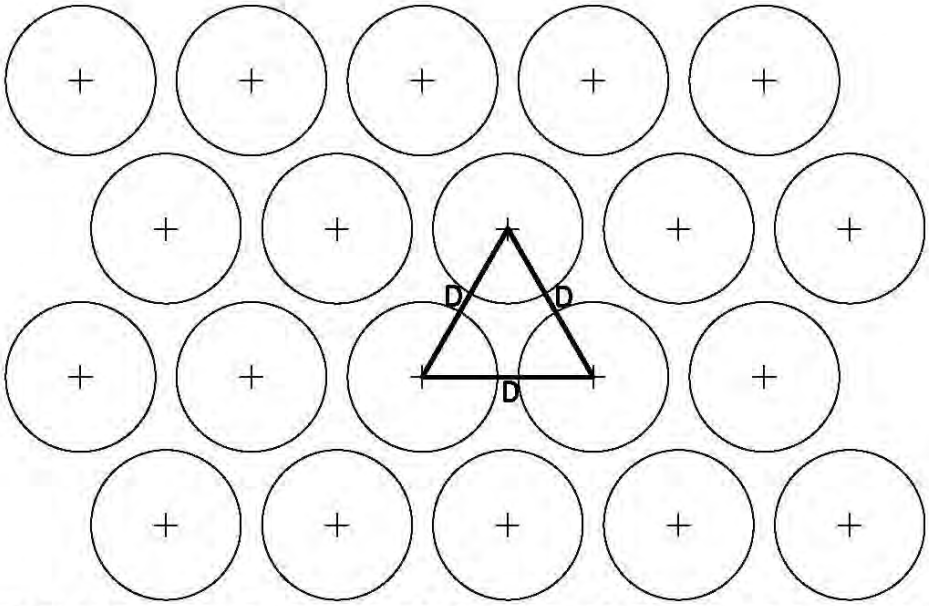

D=DIMENSION OF PLANT SPACING (SHRUB OR GROUND COVER AS INDICATED ON PLANS)

TYPICAL BED PLANT SPACING

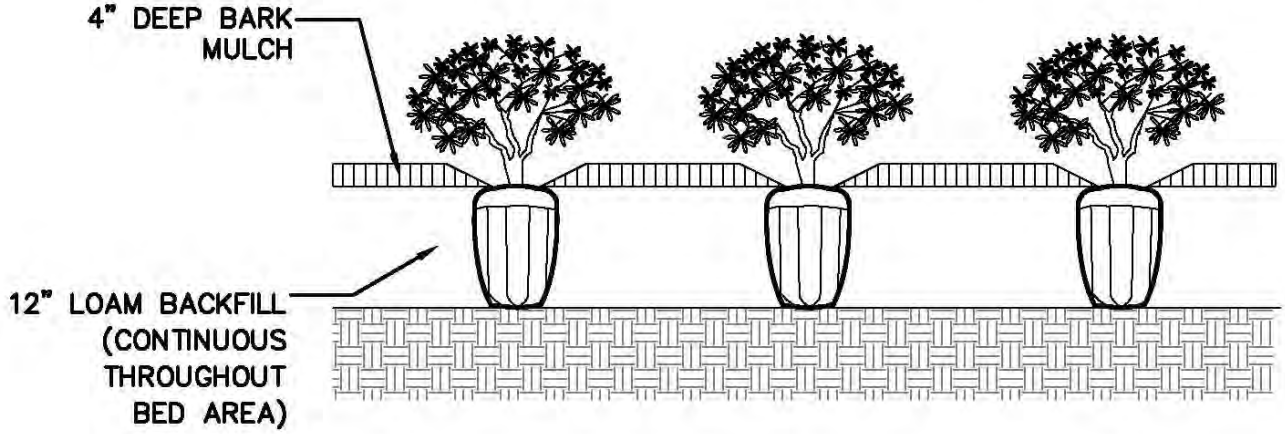

GROUNDCOVER BED PLANTING

GROUNDCOVER PLANTING DETAIL

S:\DWG\DETAILS\PARKS\657-1 GRDCVR.DWG

NOT TO SCALE

FIGURE 657-1

SECTION 658 --TRANSPLANTING PLANT MATERIAL

Description

1.1 This work shall consist of digging up plant material consisting of trees, shrubs, and vines, and transplanting such at the locations shown or ordered. If temporary storage is necessary, care shall be taken to heel-in or plant the material where it can receive proper care until the permanent site is ready.

Materials

2.1 Materials shall conform to the requirements of Section 650 , except that the plant material shall consist of the existing plants designated.

2.1.1 Where plant materials are designated to be moved and insufficient root systems or other faults are found in the existing plants, the Engineer may direct that new plants from nursery stock of similar or approved species be substituted.

Construction Requirements

3.1 Construction requirements shall conform to the applicable construction requirements of Section 650 through Section 657 for the type of plant material being transplanted.

Method of Measurement

4.1 Transplanting plant material will be measured as prescribed in Section 650 .

Basis of Payment

5.1 The accepted quantities of plant material transplanted will be paid for at the Contract unit price per each complete in place.

5.2 When new plant material has been ordered, payment will be made for furnishing and planting such plants under the appropriate item.

Pay Items and Units, Section 658 --Transplanting Plant Material:

658.__	Transplantation (Specific Plant Material)	Each

SECTION 692 -- MOBILIZATION

Description

1.1 This item shall consist of preparatory work and operations, including but not limited to, those necessary to the movement of personnel, equipment, supplies, and incidentals to the site of the work; and for all other work and operations which must be performed or for costs which must be incurred prior to beginning work on the various items.

Method of Measurement

4.1 This item will be measured as a Unit.

Basis of Payment

5.1 Partial payments for this item will be made approximately as follows:

(a) When 5 percent of the original contract amount is earned, 25 percent of the amount bid, or 2-1/2 percent of the original contract amount, whichever is the lesser, will be paid.

(b) When 10 percent of the original contract amount is earned, 50 percent of the amount bid, or 5 percent of the original contract amount, whichever is lesser, will be paid.

(c) When 25 percent of the original contract amount is earned, 60 percent of the amount bid, or 6 percent of the original contract amount, whichever is lesser, will be paid.

(d) When 50 percent of the original contract amount is earned, 100 percent of the amount bid, or 10 percent of the original contract amount, whichever is lesser, will be paid.

5.2 Upon completion of all work, payment of any amount bid for this item in excess of 10 percent of the original contract amount will be paid.

5.3 Upon written request by the Contractor made within 30 days of the Award of Contract, an amount equal to 25 percent of the amount bid for this item or 1 percent of the contract amount, whichever is lesser, will be paid. Further partial payments will be made according to the schedule in 5.1.

5.4 The total sum of all payments will not exceed the original contract amount bid for this item, regardless of the fact that the Contractor may have, for any reason, shut down his work on the project or moved equipment away from the project and then back again.

5.5 When the item for mobilization is not included in the proposal form, the costs as described in the item will not be paid for directly, but shall be considered incidental to other items in the proposal.

Pay Items and Units, Section 692 -- Mobilization:

692	Mobilization	Lump Sum

DIVISION 700 – MATERIALS

Table 702- 1 Cationic Asphalt Emulsions

Type	Rapid Setting			
Grade	CRS-1h		CRS-1	
	min	max	min	max
Tests on emulsions:				
Viscosity, Saybolt Furol at 122° F, s	20	100		
Storage stability test, 24 hour, %		1.0		1.0
Sieve test, % (5) (6)		0.10		0.10
Distillation				
Oil Distillate, %		3		3
Residue by distilation, %	63		55	
Tests on residue from distillation test:				
Penetration, 77° F, 100g, 5s,	40	90	100	200
Solubility in trichloroethylene,%	97.5		97.5	
Suggested spraying temperature, ° C	25	60	25	60

Table 702- 2 Anionic Asphalt Emulsions

Type	Rapid Setting						Medium Setting					
Grade	RS-1h		RS-1		RS-2		HFMS-2		MS-4		MS-5	
	min	max	min	max	min	max	min	max	min	max	min	max
Tests on emulsions:												
Viscosity, Saybolt Furol at 77° F, s	20	100	20	100			100 see(1)		50	500	50	500
Viscosity, Saybolt Furol at 122° F , s					75	400						
Storage stability test, 24 hour, %		1.0		1.0		1.0		1.0		1.0		1.0
Coating ability and water resistance:												
Coating, dry aggregate							good		75%		75%	
Coating , after spraying							fair		see (2)(3)(4)		see (2)(3)(4)	
Coating, wet aggregate							fair					
Coating , after spraying							fair					
Sieve test, % (5) (6)		0.1		0.1		0.1		0.1		0.1		0.1
Oil Distillate, %									2.0	7.0	0.0	3.0
Residue by distilation, %	55		55		65		65		65		65	
Tests on residue from distillation test:												
Penetration, 77° F, 100g, 5s	40	90	100	200	100	200	100	200	200		150	250
Solubility in trichloroethylene,%	97.5		97.5		97.5		97.5		97.5		97.5	
Float test, 140° F (60° C), s							1200		50		100	

(1) 50+ when material is used for sealing

(2) Wet Coating: Weight 100 ±0.5 gms. of aggregate, 20 to 30 mesh standard Ottawa sand, into a 600 ml. Glass beaker and add soft tap water, approximately twice the volume of that of sand. Weigh into the beaker containing the sand and water 8 ± 0.2 gms. of the emulsion at room temperature and mix for 2 minutes with a stiff spatula. Cover the mixture with approximately twice its own volume of tap water and pour the water off without further mixing. Repeat this process. After the second rinse, at least 75 percent of the sand shall remain coated.

(3) Stripping: After evaluating the wet coating, place the mixture into a clear 600ml. glass beaker, cover the mixture with tap water, let stand for 1 to 16 hours and examine. At least 75 percent of the sand shall remain coated.

(4) The coating and stripping test may be waived when MS-5 is used for sealing.

SECTION 703 -- AGGREGATES

Table 703- 1 Required Grading, Graded Coarse Aggregate

Standard Stone Size	#4	#357	#467	#57	#67	#7	#89
Min to Max	¾ " to 1½"	No. 4 to 2"	No.4 to 1½ "	No.4 to 1"	No.4 to ¾"	No. 4 to ½"	No.16 to $^{3}/_{8}$"
Sieve Size	Percentage by Weight Passing						
2-1/2"	-----	100	-----	-----	-----	-----	-----
2"	100	95-100	100	-----	-----	-----	-----
1-1/2"	90-100	-----	95-100	100	-----	-----	-----
1"	20-55	35-70	-----	95-100	100	-----	-----
3/4"	0-15	-----	35-70	-----	90-100	100	-----
1/2"	-----	10-30	-----	25-60	-----	90-100	100
3/8"	0-5	-----	10-30	-----	20-55	40-70	90-100
No. 4	-----	0-5	0-5	0-10	0-10	0-15	20-25
No. 8	-----	-----	-----	0-5	0-5	0-5	5-30
No. 16	-----	-----	-----	-----	-----	-----	0-10
No. 50	-----	-----	-----	-----	-----	-----	0-5

SECTION 707 -- CEMENT MORTAR

Description

1.1 Cement mortar shall consist of either portland cement of masonry cement, mortar sand, and water.

Materials

2.1 Portland cement shall conform to 520.2.1.

2.2 Masonry cement shall be a portland-cement meeting the requirements of AASHTO M 150.

Mortar sand shall meet the requirements of AASHTO M 45 except as shown in Table 707- 1

Table 707- 1 Gradation of Mortar Sand

Sieve Size	Percent by Wt. Passing
No. 8	100
No. 16	60 – 100
No. 50	15 – 35
No. 100	2 – 15
No. 200	0 – 5

NOTE: In lieu of the above, fine aggregate graded in accordance with 520.2.2.2.1 may be used in mortar for mortar rubble masonry and with concrete blocks for catch basins and drop inlets.

2.2.1 Test for impurities shall comply with AASHTO T 21. Results that are darker than the standard shall be cause for rejection, except as provided in 2.2.1.1.

2.2.1.1 Sand for mortar not conforming to 2.3.1 shall be tested in accordance with AASHTO T 71 and it shall meet the requirements of 5.2.3 of AASHTO M 45.

2.3 Water shall meet the requirements of 520.2.5.

Proportions and Procedures

3.1 Mortar shall be composed of 1 part by volume of either portland cement or masonry cement, except as specified in 3.4, combined with 2 parts, by volume, of damp loose mortar sand with water as necessary to obtain required consistency.

3.2 Hand mixing shall require the thorough mixing of the dry cement and damp sand, in a clean, tight mortar box until the mixture is of a uniform color. Water shall be added in such quantity as to form a mortar having the desired consistency.

3.3 Hand mixing shall require the thorough mixing of the dry cement and damp sand, in a clean, tight mortar box until the mixture is of a uniform color. Water shall be added in such quantity as to form a mortar having the desired consistency.

3.4 Machine mixing of mortar shall require adding and mixing dry cement and damp sand, then add water to an approved mixer, for not less than 3 minutes to reach workability.

3.5 Cement for mortar in ashlar or for mortar squared stone masonry shall consist of portland cement only.

3.6 Mortars shall be used and placed in final position within 2-1/2 hours after mixing.

3.7 Mortar for bridge curbs shall meet the requirements of 609.2.5 and shall be used as specified under 609.3.1.6.

SECTION 708 -- PAINTS

Description.

These specifications are intended to specify paints that will meet service requirements for highway construction.

Paint shall be homogeneous, free of contaminant, and of a consistency suitable for use in the capacity for which it is specified. Finished paint shall well ground and the pigment shall be properly dispersed in the vehicle according to the requirements of the paint. The dispersion shall be of such nature that the pigment does not settle badly, does not cake or thicken in container, and does not become granular or curdled. It shall be easily broken up with a paddle to form a smooth uniform product of the proper consistency and shall possess satisfactory properties in all respects which affect its application and curing.

The color shall match the established standard. The hiding power shall be sufficient to obtain complete hiding of the preceding coat when applied at normal spreading rates. The primer and intermediate coat shall dry with a dull gloss; the finish coat with a full gloss unless otherwise specified.

In these paint specifications, unless otherwise stated, all references to percentages refer to percentages by weight.

Packaging

All paint furnished must be shipped in strong new containers having a capacity of not more than 5 gallons each. The containers shall be equipped with a lever- type ring seal or lug-type cover and wire bails. Each container shall be so filled that the net weight of the material in the can shall be the product of the weight per gallon determined at 75-80 degrees F and the specified gallon capacity of the can.

All containers of paint shall be clearly labeled with the following information:

- New Hampshire Paint Number, Name and Color
- Lot and Batch Number
- Date of Manufacture
- Volume and Weight of Contents
- Volatile Organic Compounds (VOC) Contents
- Instructions for opening, mixing, thining and applying paint
- Names and Address of Manufacturer

Identification

To provide a means of identification, the applicable number and name taken from the following list, unless otherwise specified, shall be printed on the label.

- **NH 4.11 White Bead Binder**
- **NH 4.12 Yellow Bead Binder**

1.1 General. This specification covers white and yellow traffic paint which may be used as a base for drop-on reflecting glass beads, or for use as a plain non-reflective traffic paint. It shall be suitable for either bituminous or concrete surfaces.

1.2 The paint shall be formulated and processed specifically for service as a binder for reflective beads, in such a manner as to produce maximum adhesion, refraction, and retroreflection. Any capillary action of the paint shall not be such as to cause complete coverage of the beads.

1.3 The paint shall be well mixed in the manufacturing process and shall be properly ground when incorporating the pigments in order to conform to the requirements as specified.

1.4 The paint shall not liver, thicken, curdle, gel, or otherwise show any objectionable properties during storage and shall be readily remixed manually to a smooth uniform consistency throughout.

1.5 The paint shall dry on a road surface to a uniform noncracking film that will not darken in sunlight. It shall be formulated for application with mechanical line-marking equipment and shall meet the opacity (contrast ratio) properties specified herein. The paint is a substrate for binding glass beads so as to produce a highly weather resistant traffic line.

2.1 Paint. Paint shall be 100% acrylic, with or without methanol, rated non-combustible with the composition complying with Table 708-1, Table 708-2 and Table 708-3.

Table 708- 1 White Traffic Paint

Property	Test Method	Requirements
Binder	ASTM D 2621 Infrared Analysis	100 % Acrylic
Polymer Emulsion within Binder	NHDOT Test #1-Fluorescent under a black light	Rohm & Haas FT3427 or approved equivalent.
Titanium Dioxide, Rutile Type II	ASTM D 1394	1 lb./gal. Min.
Total solids	ASTM D 3723	76% Min. by weight 62% Min. by volume
% Pigment	ASTM D 3723	58% Min. to 62% Max.
% Vehicle	ASTM D 3723	38% Min. to 42% Max
% Non-volatile in vehicle	ASTM D 3723	42% Min. by weight
Lead	ASTM D 3335	0.06% Max.
VOC	ASTM D 3960	1.25 lb./gal. Max.
Weight per gallon	ASTM D 1475	14.0 ± 0.3 lb./gal.
pH	9.6 Min.	
Flash Point (Close Cup)	D 3278 Setaflash	> 140º F
Color	Without beads a minimum of 24 hours after application	Fed-Std-595B No. 37886 - White

Table 708- 2 Yellow Traffic Paint

Property	Test Method	Requirements
Binder	ASTM D 2621 Infrared Analysis	100 % Acrylic
Polymer Emulsion within Binder	NHDOT Test #1-Fluorescent under a black light	Rohm & Haas FT3427 or approved equivalent. Pigment -Yellow #65 or #75
Titanium Dioxide, Rutile Type II	ASTM D 1394	0.2 lb./gal. Min.
Total solids	ASTM D 3723	76% Min. by weight 62% Min. by volume
% Pigment	ASTM D 3723	58% Min. to 62% Max.
% Vehicle	ASTM D 3723	38% Min to 42% Max
% Non-volatile in vehicle	ASTM D 3723	42% Min. by weight
Lead	ASTM D 3335	0.06% Max.
VOC	ASTM D 3960	1.25 lb./gal. Max.
Weight per gallon	ASTM D 1475	13.55 ± 0.3 lb./gal.
pH	9.6 Min.	
Flash Point (Close Cup)	D 3278 Setaflash	> 140º F
Color	Without beads a minimum of 24 hours after application	Fed-Std-595B No. 33538-yellow

2.2 In addition, all traffic paint shall comply with the following requirements:

Table 708- 3 Additional Paint Properties

Property	Test Method	Requirements
Viscosity (Krebs Units)	ASTM D 562	80 Min. to 92 Max. @ 77º F
Fineness of Grind	ASTM D 1210	4 Min.
Drying Time	ASTM D 711 with wet film Thickness of 5 mils	10 minutes Max. @ 77º F Uniformed film and no cracking or flaking
Flexibility	FSS TT-P-1952D, Section 4.5.5, using 1/2" mandrel bend	No Cracking or Flaking
Dry Opacity (contrast ratio)	ASTM D 2244 with a wet film thickness of 5 mils	0.96 Min.
Daylight Reflectance	Federal Test Method No. 141c	85% Min. for White Paint 50% Min. for Yellow Paint
Bleeding (ratio)	FSS TT-P-1952D	0.97 Min.
Scrub Resistance	ASTM D 2486	Pass 300 cycles
Freeze-Thaw Stability	FSS TT-P-1952D	< 10% change
Heat Stability (Krebs Units)	FSS TT-P-1952D	< 10% change

2.2.1 Condition in Container: The paint shall show no livering, skinning, mold growth, putrification, corrosion of the container, or hard settling of the pigment in the container. Any settling shall be readily dispersed when stirred by hand with no persistent foaming.

2.2.2 No Track Time: Paint shall dry to a no tracking condition in no longer than 75 seconds. The "no tracking" condition shall be determined by actual application on the pavement at a wet film thickness of 20 mils with white or yellow paint covered with glass beads at a rate of 8 pounds per gallon The paint lines for this test shall be applied with the striping equipment with the paint at temperatures between 85º -105º F at the spray orifice. This maximum tracking time shall not be exceeded when the pavement temperature varies from 50º F to 120º F and under humidity conditions of 80% or less providing that the pavement is dry. The "no tracking" time shall be determined by passing over the paint line three (3) minutes after paint application, in a simulated passing maneuver at a constant speed of 30 to 40 miles per hour with a passenger car. A line showing no visual deposition of the paint to the pavement surface when viewed from a distance of approximately 50 feet from the point where the test vehicle has crossed the line shall be considered as showing "no tracking" and conforming to the requirement for field drying conditions. This field dry time test shall be used for production samples only.

2.2.3 Dry Through (Early Washout): A 15 mil wet film thickness paint sample placed immediately in a humidity chamber maintained at 72.5º F ± 2.5º F and 90% ± 3% relative humidity shall have a "dry-through" time less than or equal to paint film tested in accordance

with ASTM D 1640, except that the pressure exerted will be the minimum needed to maintain contact between the thumb and film.

APPENDICES

APPENDIX A - PERMIT FORMS

CITY OF MANCHESTER
Department of Public Works
475 Valley Street
Manchester, NH 03103
603-624-6444
www.manchesternh.gov

Kevin A. Sheppard, P.E.
Public Works Director

Timothy J. Clougherty
Deputy Director

$25 Fee

ADDRESS CERTIFICATE

An Address or Grade Certificate officially assigns an address of a proposed building lot in accordance with City Ordinance 97:15-18.

AGREEMENT

- The Builder/Developer is responsible for providing the Department of Public Works with accurate location and frontage in order to acquire the correct address.
- The assigned address will be affixed to the building in a manner plainly visible from the street where is abuts the main entrance to the property. Noncompliance may result in a $25 fine.
- The Builder/Developer is responsible for constructing the building and developing the lot in a manner that will properly control runoff and and/or groundwater without adversely affecting surrounding properties or the city right-of-way. Pumping or releasing water into the city right-of-way is prohibited.

LOCATION INFORMATION

City Tax Map Lot Number	Assigned Address

Name:	Title:

By signing the form, the Builder/Developer named above agrees to the terms set forth in the above agreement:

_____ _____
Signature Date

_____ _____
Approved by Department of Public Works. Date

SEWER AVAILABILITY

☐ Sanitary sewerage is available from (number):_____
☐ On land owned by:_____
☐ At Map Lot Number:_____
Capacity Available:
- ☐ Single Family Home
- ☐ Multi-Family Home (Number of Units _____)
- ☐ Other:_____

Information provided by: _____
Department of Public Works

Date:_____

CITY OF MANCHESTER
Department of Public Works
475 Valley Street
Manchester, NH 03103
603-624-6444
www.manchesternh.gov

Kevin A. Sheppard, P.E.
Public Works Director

Timothy J. Clougherty
Deputy Director

ENCUMBRANCE PERMIT APPLICATION*

Name of Applicant: _____

Company Name: _____

Address: _____

City _____ State _____ Zip _____

Phone : _____ Email: _____

Type of Encumbrance Requested	☐ **Street**	☐ **Sidewalk**
Encumbrance Location (address)		
From (location or cross street)		
To (location or cross street)		
Reason for Encumbrance		
Start Date		
End Date		

CITY OF MANCHESTER
Department of Public Works
475 Valley Street
Manchester, NH 03103
603-624-6444
www.manchesternh.gov

Kevin A. Sheppard, P.E.
Public Works Director

Timothy J. Clougherty
Deputy Director

APPLICATION FOR PIPE LAYER CERTIFICATION*

Name of Applicant: _____

Company Name: _____

Address: _____

City _____ State _____ Zip _____

Phone : _____ Email: _____

QUALIFICATION STATEMENT

Please answer the following questions to assist the City of Manchester in their decision for your certification.

1. Who will provide the primary supervision for the proposed work? Please state their special qualifications.
   _____
   _____

2. Describe the equipment you propose to furnish.
   a. **Your Own Equipment**: _____
   _____
   _____
   _____
   _____
   b. **Rented Equipment:** _____
   _____
   _____
   _____

3. How many years have you or your organization been in business as a contractor under the name in which you propose to execute this contract?
   _____
   _____

4. What projects have you or your organization completed similar to that proposed?
   a. Name & Address of owner for whom work was done:
   _____
   _____
   _____
   b. Work done, contractor or subcontractor:_____
   _____
   _____

c. Description of work: _____

_____

_____

_____

d. Approximate amount of contract: _____

e. Approximate date work was done: _____

5. Have you or your organization ever failed to complete any work awarded? If so, when, where and why? _____

_____

_____

_____

I certify that the above information is true and correct and to the best of my knowledge. By signing this application, I certify that I am familiar with Section 52.117 of the Sewer Use Ordinance of the City of Manchester and apply for certification as a pipe layer in accordance of the aforementioned Ordinance and the Articles pertinent to the work to be performed. As the applicant, I also agree that I will supervise and be responsible for all work performed pursuant to this certification.

I understand that this Certification shall be valid for one year from the date of execution.

For due consideration by the Department of Public Works, I am enclosing a list of complete references providing name, location and scope of prior work done along with any other evidence attesting to their qualifications.

_____ _____

Signature of Applicant Date

_____

Name and Title of Applicant (Printed)

---

*This completed application should be sent to:

City of Manchester
Department of Public Works
475 Valley Street
Manchester, NH 03103

Along with:

1. A $50 (nonrefundable) application fee. Please make checks out to ***The City of Manchester***
2. A list of References as mentioned above

CITY OF MANCHESTER
Department of Public Works
475 Valley Street
Manchester, NH 03103
603-624-6444
www.manchesternh.gov

Kevin A. Sheppard, P.E.
Public Works Director

Timothy J. Clougherty
Deputy Director

INSPECTION SERVICES AGREEMENT

All work involving developments or improvements, including but not limited to, curb, sidewalk, drainage & sewer improvements related to development properties on any city street or right of way shall be inspected by the Department of Public Works, Engineering Division. The Contractor shall execute this Inspection Services Agreement herein to that effect.

1. The Department of Public Works, Engineering Division, will provide inspection of the improvement/development listed above.
2. The Contractor, as listed, will reimburse the Department of Public Works the cost of inspection.
3. To guarantee payment for the inspection costs involved, the Contractor agrees to provide a surety bond, letter of credit or certified check made payable to the City of Manchester, Department of Public Works in the amount of $5,000

Name of Applicant:_____

Contractor: _____

Phone: _____

Address:_____

City/State/Zip: _____

Email: _____

Attach business card here

Development or Improvement Information	Bond & Insurance Information
Name of Development: _____	Bond or Certification No: _____
Location:_____	Bonding Company or Bank:_____
_____	_____

Signature of Contractor/Developer	Title	Date:
Public Works Director or Designee	Title (if designee)	Date

INSPECTION SERVICES TERMS AND CONDITIONS

The Contractor shall inform the inspector assigned to the project of his proposed work schedule and shall notify the inspector at least 2 working days in advance of all work requiring inspection. If inspection services requested need to be cancelled or changed, a 24 hour notice is required. If the contractor fails to provide a 24 hour notice to cancel or reschedule inspection services, a minimum charge of 3 hours will be assessed. The Contractor will be assessed the current hourly rate for inspectors, including time and one-half overtime.

All inspectors shall be given access to work areas and materials being used. The Contractor must provide assistance, when requested, to complete a detailed inspection. No work shall be backfilled or covered without inspection. No work shall be done at night contrary to local ordinances. Any work completed without prior inspection may be ordered removed and replaced at the contractor's expense.

Inspection services will be provided only after all necessary permits have been obtained. Approval of work inspected by the Department of Public Works relative to site development and subdivision projects shall not be construed as partial or final acceptance of the projects. When any unit of government or political subdivision or any railroad corporation has an interest in the work, its respective representatives shall have the right to inspect the work.

Final acceptance of all roadway, sewer, drain, bound installation and approval of as-built drawings will be made by the City of Manchester Planning Board when all the work is satisfactorily completed per the approved plans and specifications.

Reference: Standard Specifications for Road, Drain & Sewer Construction, General Provisions for Public Improvements Part I, Section 6.

APPENDIX B – STANDARD CONSTRUCTION FORMS

CITY OF MANCHESTER
DEPARTMENT OF PUBLIC WORKS
DISPOSAL AGREEMENT

(This does not apply to disposal areas operated by a public agency)

Source:
Project: _____

Disposal Site:
Owner _____

Site Address: _____

Approximate volume of material to be disposed of (cy) _____

As specified in section 203.3.9.6 of the Department of Public Works Standard Specification for Road, Drain and Sewer Construction, this agreement is required to be completed and submitted for approval when the Contractor obtains permission from the landowner to dispose of surplus materials on his property.

This form sets forth the conditions under which the Department will approve the Contractor to dispose of surplus material on the property of the above landowner.

The Owner and the Contractor, by signing below, acknowledge and agree to the following specifications:

1) Other than under the conditions of this instrument, the Department is not a party to any agreement or contract between the Owner and Contractor.

2) The Contractor shall not dispose of material considered to be hazardous or injurious to public welfare, including contaminated soils and asbestos, except as permitted by federal, state, and local regulations. Solid waste shall be disposed of according to all federal, state, and local regulations.

3) The Contractor shall not dispose of materials within the boundaries of any floodway, or within the limits of any 100 year floodplain. It shall be the responsibility of the Contractor to ascertain and mark the boundaries of such floodway and floodplain using available information from federal, state, and local resources.

4) All wood less than 5 inches in diameter and not salvaged for firewood shall be chipped. Burying of brush shall not be permitted. Stumps, roots and rotten wood may be buried at approved sites on or off the project. Approved sites shall be a minimum of 4 feet above the seasonal high groundwater table; and have a minimum of 18 inches of clean fill cover material graded and shaped to present a pleasing

appearance. Approval of the proposed disposal area will be contingent upon agreement by the Contractor and the property owner to leave the area in such shape that it will blend with the surrounding terrain and that erosion will be kept to the minimum. Without special permission, slopes shall not be left steeper than 3:1. No disposal area shall be left in such condition that erosion after completion of the work might result in water pollution by silt or other deleterious substances. Areas shall be left in such shape and condition that material will not wash to block or obstruct drainage ways. If holes caused by settlement appear, they shall be filled as directed.

Unless otherwise ordered, disposal areas shall be covered with 6 inches of material capable of supporting vegetation and either fertilized and seeded with grass seed or planted with seedlings. Grass seed used shall be slope seed as specified in Section 644. Seedlings shall be set out in accordance with accepted horticultural practices as directed.

Unless permission is given to preserve access roads to disposal areas adjacent to highways, such roads shall be obliterated.

5) The contract requirements as to disposal of unwanted material from the roadway excavation are similar to those in section (2) above except that the minimum depth of cover and the height above seasonal high water is not specified and slopes shall not be left steeper than 2:1.

6) Approval by the Engineer to open and operate a disposal area will terminate at the completion of the Project.

It is hereby agreed among the Owner, the Contractor and the Engineer that this disposal area will be finished in accordance with the above specifications as well as any pertinent local, State or Federal regulations. Indicated after the box checked below is the landscaping treatment to be performed in order for the area to be acceptable to the Department:

[ ] The entire area is to be fertilized and seeded.

[ ] The entire area is to be planted and seeded.

[ ] Part of the area is to be seeded and the remainder planted with seedlings as agreed below.

Seedlings _____ shall be
(Age or size, species, variety)

planted 8 feet center to center or _____
(Spacing)

Any additional landscaping work to be done and any other pertinent information which is desired to be a part of the official records may be shown here:

The Contractor's attention is directed to RSA 483-A, the requirements of which must be fulfilled if this disposal area involves filling of wetlands. Furthermore, the Contractor's attention is directed to RSA 149:8-a, the provisions of which must be fulfilled if this operation involves filling on the border of the surface waters of the state or will significantly alter the characteristics of natural runoff or create an unnatural runoff; and RSA 149-M if the Contractor intends to dispose of solid waste including stumps. The Contractor's attention is also directed to Sections 9 and 10 of the River and Harbor Act of 1899, and Section 404 of the Clean Water Act. Compliance may require a permit for work in or over "navigable waters of the U.S.", or material placed in "waters of the U.S." including wetlands.

Signature of owner	Name(s) or Signature(s) of Joint Owner(s)
Street	Street
Town	Town
Contractor Name	Approved as to Landscaping Provisions:
By (Signature)	Project Engineer Date

If joint owners are involved, the Owner signing should give all other names and addresses. Separate forms should be filed in connection with adjacent owners.

CITY OF MANCHESTER
DEPARTMENT OF PUBLIC WORKS
CERTIFICATE OF COMPLIANCE

Date: _____

We, _____
(Manufacturer, Supplier or Contractor)

Located at _____
(Address)

HEREBY CERTIFY THAT:

_____
(Type of Product)

_____
(Product Trade Name)

Manufactured by: _____
Supplied by: _____
Furnished to: _____
(Contractor)

Delivered and Used on: _____
(Project Name)

Used for Item No.	Name of Item

MEETS THE REQUIREMENTS OF THE PERTINENT PROJECT PLANS, SPECIAL PROVISIONS, AND SPECIFICATIONS OF THE MANCHESTER, NH DEPARTMENT OF PUBLIC WORKS IN ALL RESPECTS. PROCESSING, PRODUCT TESTING AND INSPECTION CONTROL OF RAW MATERIALS ARE IN CONFORMANCE WITH ALL APPLICABLE SPECIFICATION, DRAWINGS AND/OR STANDARDS OF ALL ARTICLES FURNISHED.

All records and documents pertinent to this certificate and not submitted herewith will be maintained available by the undersigned for a period of not less than three (3) years from the date of acceptance of the project.

Signed by: _____ _____
(Officer of Organization) (Title)

Subscribed and sworn to before me this ____ day of _____ , _____

_____
Notary Public/Justice of the Peace My Commission Expires: _____

INDEX

Bold page number denotes specification section

Abandoning Pipes 162
Acceptance of Work by Contractor 98
Aggregate Base Courses **205**
  Density Test 210
  Placement 208
  Required Gradation 213
Authority of Engineer 90
Award of Contract 77
Backfill 181, 199
Barrier Membrane **356**
Bedding and Backfill **198**
Bidding Requirements 70
  Reasons for Denial 71
  Underground Utilities 72
Bike and Rail Pavement Markings
  Pay Quantities 613
Bounds **588**
Brush
  Definition 154
Calcium Chloride **587**
Cape Seal **298**
Cement Mortar **678**
Certificate of Compliance 103
  Required 104
Chip Seal **291**
Claims by Contractor 99
Clearing and Grubbing **154**
Cold Planing **301**
Common Excavation
  Defined 166
Concrete **320**
  Admixtures 324
  Bonding Agents 326
  Classes 320
  Cold Weather Placement 342
  Consolidation 338
  Curing 346
  Curing Materials 326
  Finish, Class of 347
  Finishing 347
  Forms 333
  Hot Weather Placement 344
  Joints 342
  Loading 347
  Placement 336
  Slump Requirements 332
  Underwater Placement 339
  Weepers and Drains 334
Contract Revisions
  Differing Site Conditions 80
  Eliminated Items 82
  Extra Work 82
  General Procedures 79
  Notification 82
  Significant Changes in Work 81
  Suspension of Work 80
Contract Time Extension 131
Contractor's Responsibility of Work 85
Crack Sealing *See Hot Poured Crack Sealant*
Curbing **520**
  Asphalt 524
  Asphalt Mix Specifications 523
  Granite Curb Tolerances 521
  Removal for Storage 163
Deciduous Shrubs **667**
Deciduous Trees **663**
Default of Contract 135
Detectable Warning Devices
  Material Specifications 507
  Placement 503
Driveways **532**
Dust Control 582, 587
Electrical Conduit **538**
Erosion Control **628**
Evergreen Shrubs **665**
Evergreen Trees **661**
Excavation and Embankment **166**
  Backfill at Structures 181
  Density Requirements 182
  Placing Rock in Roadway 180
  Removal and Replacement of Unsuitable
    Material 180
Extra Work 82, 141
  Allowable Delay Costs 147
  Force Account 142
  Non Allowable Charges 147
Fences **491**
  Removal 163
Filter Fabric *See Geotextiles*
Fine Grading **202**
Flowable Fill
  Mix Formula 159
Fog Seal **264**
  Application Temperature 267
  Temperature Restrictions 268
  Weather Limations 268
Force Mains 29
  Pipe Requirements 393
Geotextiles **383**
  Applications 383

Bold page number denotes specification section

Repair 387
Granite Curbing *See Curbing*
Guaranty of Work 137
Guardrail **470**
Removal 162
Hot Mix Asphalt **218**
Aggregate Specifications 218
Compaction 244
Density Pay Adjustment 256
Material Hauling 239
Material Requirements 218
Mix Temperature Limits 237
Opening to Traffic 251
Pavement Joints 247
Paving Equipment 242
Placement Requirements 239
Production Plant Types 232
Quality Assuance 251
Smoothness 249
Use of Recycled Materials 220
Weather Limitations 241
Weighing and Hauling 239
Hot Poured Crack Sealant **275**
Humus **643**
Impervious Material
Specification 166
Inspection Agreement 56
Inspection of Work 96
Invasive Species 157
Ledge Removal *See Rock Excavation*
Light Pole Bases **590**
Loam **615**
Maintenance of Traffic **581**
Contractor's Responsibility 84
Materials
Disposal 107
Furnished by Other 106
Rejected 106
Storage and Handling 106
Substitutions 106
Micro Milling 301
Micro-Surface **280**
Milling Pavement 301
Mobilization **672**
Muck Excavation 179
Defined 166
New Roadways
Horizontal Requirements 18
Vertical Requirements 19
Notice to Proceed 128
Definition 5
Oil Water Separator 420
Pavement Arrow Markings
Pay Quantities 612
Pavement Markings **598**
Pavement Patching 260
Pavement Restoration **260**
Pavement Word Markings
Pay Quantities 611
Permit Forms III-686
Pipe
Removal 162
Placing Excavated Rock **382**
Plans
Datum Requirements 17
General Requirements 15
Plant Mix Surface Treatments **272**
Prequalification of Bidders 70
Public Improvements 53
Acceptance 58
Inspection of Work 57
Plan Requirements 54
Pump Stations 27
Reclaim Stabilzed Base **214**
Reinforcing Steel **362**
Foreign Steel 362
Synthetic Fiber 363
Rejection of Bids 74
Removal of Structures and Obstructions **159**
Removal of Unacceptable Work 97
Retainage 148
Rights of Materials Found 84
Riprap **375**
Roadway Base
Density Test 595
Material *See Aggregate Base Courses*
Rock Excavation 168
Defined 166
Presplitting 177
Stemming Material 178
Vibration monitoring 169
Rollers
Asphalt, Requirements 244
Sanitary Sewer Manholes **411**
Acceptable Pipe Connections 414
Casting Adjustment 413
Floodplain Areas 413
Steps 414
Testing 414
Sanitary Sewers **391**
Backfill 394
Bedding 394

Bold page number denotes specification section

Cleanout Spacing 395
House Services 395
Hydrostatic Testing 401
Low Pressure Air Testing 401
Pipe 391
Plastic Pipe Requirements 393
Polyethylene Encasement 392
Testing 396
Trench Dams 394
Sawed Pavement **592**
Sewer Pipe
Bedding Requirements 199
Sand Blanket 199
Sewers
General Requirements 25
Minimum Pipe Slopes 26
Sidewalks **503**
Silt Fence 629
Sod **644**
Stone Fill **379**
Stone Masonry **366**
Stone Wall **372**
Storm Drainage 30
Calculations 30
Detention Basins 32
Storm Drainage Structures **443**
Polyethelyne Liners 462
Storm Drains **426**
Pipe 426
Street Light Placement 549
Street Moratorium
Patching Detail 48
Structure Excavation **188**
Tack Coat 241, **269**
Application Rates 270
Application Temperatures **270**
Tactile Warning Plates *See Detectable Warning Devices*
Testing of Concrete 332, 594
Testing of Materials **594**
Traffic Control 578
Traffic Signals **555**
Controller Cabinet 559
Inductive Loop Detectors 563
Mast Arm Requirements 558
Pedestrian Signals 556
Reflectorized Backplates 556
Signal Cable and Wire Installation 565
Signal Heads 555
Traffic Signs **550**
Transplanting Plant Material **671**
Trees
Sizes 154
Trench Backfill
Density Test 595
Turf Establishment **641**
Unclassified Excavation 179
Defined 166
Underdrains **463**
Uniformed Officers and Flagmen **578**
Unsuitable Material
Definition 167
Use of Police for Traffic Control 578
Value Engineering 86
Vines and Ground Cover **669**