REQUEST FOR PROPOSAL

SPECIFICATIONS

AND

CONTRACT AGREEMENT

FOR

FY17-500-03

MICROSURFACING AND FOG SEAL TREATMENTS-FY17

CITY OF MANCHESTER
DEPARTMENT OF PUBLIC WORKS
HILLSBOROUGH COUNTY

2016

HIGHWAY COMMISSION

Hal Sullivan	Chairman
Rick Rothwell	Vice-Chairman
Bill Skouteris	Clerk
Toni Pappas	Commissioner
Patrick Robinson	Commissioner

Kevin A. Sheppard, P.E. . Public Works Director

CITY OF MANCHESTER

New Hampshire

REQUEST FOR PROPOSAL
SPECIFICATIONS
and
CONTRACT AGREEMENT

for

MICROSURFACING AND FOG SEAL TREATMENTS-FY17

FY17-500-03

Prepared by

CITY OF MANCHESTER, NEW HAMPSHIRE
DEPARTMENT OF PUBLIC WORKS
HILLSBOROUGH COUNTY

TABLE OF CONTENTS

CONTENTS

INVITATION FOR PROPOSALS 3
INSTRUCTIONS TO BIDDERS 5
STANDARD SPECIFICATIONS 11
BIDDER QUALIFICATIONS 12
BID SECURITY 14
PROPOSAL 16
BID BOND 21
PROSECUTION OF THE WORK 22
SUPLEMENTAL SPECIFICATIONS 24
CONTRACT AGREEMENT 58
STATEMENT OF UNDERSTANDING 61
STATEMENT OF COMPLIANCE 62
DRUG TESTING PROGRAM 62
PERFORMANCE BOND 63
PAYMENT BOND 65

City of Manchester
Department of Public Works
475 Valley Street
Manchester, New Hampshire

INVITATION FOR PROPOSALS

Sealed proposals will be received from prequalified contractors at the office of the Department of Public Works of the City of Manchester, New Hampshire before or at **2:00 P.M.**, prevailing time on the **21st** day of **June, 2016** for the following described services:

MICROSURFACING AND FOG SEAL TREATMENTS-FY17
FY17-500-03

The City of Manchester is accepting proposals the application of micro-surfacing and fog seal treatments to various City roadways

Certified Check/Bid Bond $10,000

Specifications may be seen at the office of the Department of Public Works, at the following locations:

- Department of Public Works, 475 Valley Street, Manchester, NH 03103
- Dodge Reports, 880 Second Street, Manchester New Hampshire, 03102
- Associated General Contractors of N. H., 48 Grandview Road, Bow, N.H. 03304
- Works in Progress, 20 Farrell Street, Suite 103, So. Burlington, VT 05403
- Construction Summary of N.H., 734 Chestnut Street, Manchester, N.H., 03104
- F.W. Dodge Company, 24 Hartwell Avenue, Lexington, MA. 02173

Specifications and proposal forms may be obtained on the City's website at www.manchesternh.gov, or may be obtained at the Office of the Department of Public Works for twenty-five ($25.00) dollars cash or check, non-reimbursable. The check shall be made payable to: "Department of Public Works, City of Manchester, N.H."

Proposals must be completed in both words and numerals on regular proposal forms, which shall be submitted in a sealed envelope marked: "Proposal for **"MICROSURFACING AND FOG SEAL TREATMENTS-FY17**", addressed and delivered to the Department of Public Works not later than the date and time mentioned above, at which time they will be publicly opened and read aloud.

Proposals must be accompanied by a Certified Check or Bid Bond in the amount listed above, payable to: "Department of Public Works, City of Manchester, N.H.", as security for the execution of the contract.

A Performance and Payment Bond each in the amount of 100 percent of the contract price will be required of the successful bidder.

The City of Manchester is an equal opportunity/affirmative action agency. All qualified bidders will receive consideration without regard to race, color, religion, creed, age, sex, or national origin. The City hereby notifies all bidders that it will affirmatively insure that in any contract entered into pursuant to this advertisement, disadvantaged business enterprises will be afforded full opportunity to submit bids in response to this invitation and will not be discriminated against on the grounds of race, color, national origin, sex, age, or disability in consideration for an award.

The right is reserved to waive any informalities in or reject any or all proposals and to accept the bid that is deemed most favorable to the interest of the City of Manchester.

A $5.00 non-refundable mailing fee will be charged for plans mailed to any contractor. Checks should be mailed to Department of Public Works, 475 Valley Street, Manchester, N.H. 03103.

Questions regarding this Invitation to Bid should be directed to Mr. David Winslow, at (603) 624-6444.

Department of Public Works, City of Manchester, N.H.

By: HIGHWAY COMMISSION

Hal Sullivan, Chairman

Rick Rothwell , Vice-Chairman
Bill Skouteris, Clerk
Toni Pappas, Commissioner
Patrick Robinson, Commissioner

Kevin A. Sheppard, P.E.
Public Works Director

City of Manchester
Department of Public Works
475 Valley Street, Manchester, New Hampshire

INSTRUCTIONS TO BIDDERS

GENERAL:

1. Bids will be received by the City of Manchester, New Hampshire at the place and until the time specified in the Invitation to Bid and then publicly read aloud for the information of bidders and others properly interested who may be present either in person or by representative. **NO PROPOSALS WILL BE ACCEPTED AFTER TIME AND DATE SPECIFIED.**

2. The following meanings are attached to the defined works when used in this document:

    a. The word "**City**" means City of Manchester, New Hampshire.
    b. The word "**Bidder**" means the person, firm, or corporation submitting a proposal on these specifications or any part thereof.
    c. The word "**Contractor**" means the person, firm, or corporation with whom the Contract is being made by carrying out the provisions of this Sealed Bid Invitation and the Contract.
    d. The words "**firm price**" shall mean a guarantee against price increase during the life of the Contract.

3. Strict compliance with the requirements of the Invitation to Proposal, terms and conditions, and the instructions printed is necessary. All blank spaces must be filled in. Signatures of the responsible owner/representative of the firm must be in ink. No reproductions/duplications/copies will be accepted.

4. Each proposal must give the full business address of Bidder and be signed by him with his usual signature. Proposals by partnerships must furnish the full names of all partners and must be signed with the partnership name by one of the members of the partnership or by an authorized representative, followed by the signature and title of the person signing. Proposals by corporations must be signed with the legal name of the corporation, followed by the state of incorporation and by the signature and title of president, secretary, or other person authorized to bind it in the matter. The name of each person signing shall also be typed or printed below the signature. A bid by a person who affixes to his signature the word "president", "secretary", "agent", or other title without disclosing his principal may be held to be the bid of the individual signing. When requested by the City, satisfactory evidence of the authority of the officer signing on behalf of the corporation shall be furnished. All Bids must be signed by an authorized, responsible officer or employee having the capacity to enter into contracts.

5. Proposals must be securely sealed in a suitable envelope, (facsimile or electronic submissions will not be accepted) addressed and marked on the outside as follows:

Microsurfacing and Fog Seal Treatments- FY17
FY17-500-03

6. Bidders' names and address must appear on the upper left hand corner of the sealed envelope.

7. The entire solicitation document is to be returned when submitting a Proposal, unless otherwise directed by the solicitation document. Failure to return all pages may result in a determination that the submittal is non-responsive.

PLEASE NOTE: THE CITY OF MANCHESTER IS NOT RESPONSIBLE FOR PROPOSALS NOT PROPERLY MARKED.

8. It will be the responsibility of the Bidder to see that their bid is received by the Department of Public Works, Parks, Recreation and Cemeteries Division as specified.

9. Each Proposal is received with the understanding that the acceptance in writing by the City of the Bidder to furnish any or all of the services described therein or as otherwise negotiated shall constitute a contract between the Bidder and the City.

10. A contract agreement that is customarily employed by the City will be used and will incorporate the original solicitation with all terms, condition and specifications of the sealed Proposal. A copy of the contract agreement is attached hereto.

11. Proposals may be withdrawn upon written or electronic request received from Bidders prior to the time affixed for opening. Negligence on the part of the Bidder in preparing the bid confers no right for the withdrawal of the Proposal after it has been opened.

12. The solicitation document maintained by the Purchasing Division, in the bid file folder, shall be considered the official copy. In the case of any inconsistency between Proposal documents submitted to the City, but not clearly listed on the exception page of the document or as an exception by the Bidder, the language of the official copy shall prevail. Furthermore, any exception or changes to the specifications made by the Bidder may be cause to disqualify your Proposal.

13. Award will be made in the best interest of the City taking into consideration factors set forth in the City of Manchester Procurement Code. Upon making an award, or giving notice of intent to award, the City will place appropriate notice on the Purchasing Website: www.manchesternh.gov/bids.

14. No oral interpretations will be made to any Bidder as to the meaning of the specifications or terms and conditions of this sealed Proposal. Every request for such interpretation or request for a change in the specifications or terms and conditions shall be made in writing, addressed and forwarded to:

Email: dwinslow@manchesternh.gov
Subject: Microsurfacing and Fog Seal Treatments – FY17

Seven (7) or more business days before the date affixed for opening of Proposals. Any questions received after that date will not be answered. Every interpretation made to a Bidder will be in the form of an addendum to the Sealed Proposal Invitation which, if issued, will then be posted on the website: www.manchesternh.gov/bids. All such addenda shall become part of the complete Sealed Proposal Invitation. It is the Bidder's responsibility to check the website prior to the submittal deadline to ensure that the Bidder has a complete, up-to-date Proposal package.

15. Proposals that are incomplete, not properly endorsed or signed, or otherwise contrary to these instructions may be rejected as informal by the City. The Proposal must be filled out completely and accurately.

16. Any changes and/or corrections shall be marked in red and initialed by the person making such corrections.

17. Unless otherwise negotiated, no additional charges shall be passed to the City, including any applicable taxes, delivery or surcharges.

18. As the City is exempt from the payment of federal excise taxes, all prices quoted herein are not to include these taxes.

19. The services on which Proposals are submitted must be of such character, quality and/or performance equivalence that it will serve as that specified. In submitted Proposals on services other than as specified, Bidder shall furnish complete data and identification with respect to the alternate services they propose to furnish.

20. Consideration will be given to Proposals submitted on alternate services to the extent that such action is deemed to serve the best interests of the City. The Bidder must furnish any information (specifications or test results) which will help in determining whether an item is equal or superior to our bid standards. If the Bidder does not indicate that the services he proposes to furnish is other than specified, it will be construed to mean that the Bidder will furnish the exact services described.

21. Should the Contractor fail to meet the deadline set forth in specifications the City reserves the right to procure services from other sources and hold Contractor liable for any excess costs.

22. The apparent silence of these specifications and any supplemental specifications as to any detail or the omission from the specifications of a detailed description concerning any point shall be regarded as meaning that only the best commercial practices are to prevail and correct type, size and design are to be used. All interpretations of these specifications shall be made on the basis of this statement.

23. The Bidder certifies that no official or employee of the City or State of New Hampshire has a pecuniary interest in the bid or in the Contract that the Bidder offers to execute or in the expected profits to arise there from, and that this bid is made in good faith without fraud or collusion or connection with any other person submitting a bid.

24. The City reserves the right to waive any informality in any Proposal, to reject any and all Proposals wholly or in part, and to make awards in a manner deemed in the best interest of the City.

25. Bid security, in the form of a bid bond, deposit of cash, or certified check, bank cashier's or bank official's check drawn on a solvent bank, payable to the "City of Manchester" in the required amount (see specifications) must accompany each Proposal as a guarantee that if the Proposal is accepted a contract will be entered into. Such deposits of all Bidders will be held by the City until all Proposals submitted shall have been canvassed and the Proposals have either been rejected in whole or in part or the award of the contract has been made. The bid deposit of the successful Bidder will be held until a contract is duly executed. Bid deposits will be returned to unsuccessful bidders within two (2) weeks after execution of the contract. If the successful Bidder to whom a contract shall have been awarded refuses to execute the Contract and to furnish the insurance certificate and performance and/or payment bonds herein described within the ten (10) business days after award of the Contract, the amount of the bid deposit shall be forfeited to and retained by the City as liquidated damages for such neglect or refusal.

26. The successful Bidder will be required to furnish a bond or certified check on a solvent bank payable to the: "City of Manchester" in the required amount (see specifications) as a guarantee of the faithful performance thereof. The Bonding Company shall be authorized to conduct business in the State of New Hampshire by the State of New Hampshire's Insurance Commissioner.

27. The successful Bidder will be required to furnish a payment bond or a certified check on a solvent bank payable to the "City of Manchester" in the required amount (see specification) as security for the payment of all labor performed or furnished, and for all materials used in the fulfillment of said contract. The bonding company shall be authorized to conduct business in the State of New Hampshire by the State of New Hampshire.

28. The Bidder, if awarded an order or contract, agrees to defend, indemnify, and hold harmless the City from all damages to life and property arising out of the

performance of this Contract due to the Bidder's negligence, that of his employees, subcontractors, etc., or due to the negligence of the City, its employees, representatives, agents, etc.

29. The City of Manchester may withhold acceptance of or reject any merchandise which is found, upon examination, not to meet the specification requirements. When rejected, it shall be removed by the Contractor within ten (10) days after notification of rejection.

30. Assignment of Contract: A contract shall not be assignable by the Contractor in whole or in part without the written consent of the Public Works Director or designee.

31. The Revised Statutes Annotated of the State of New Hampshire, the Charter of the City, and all City Ordinances insofar as they apply to the laws of competitive Bids, contracts and purchases are made a part hereto.

32. All deliveries of commodities hereunder shall comply in every respect with all applicable laws of the Federal Government and/or the State of New Hampshire.

33. The Bidder to whom a contract is awarded guarantees to the City that all warranties of merchantability and fitness for a particular purpose as provided for in New Hampshire 382A-2-314 and 2-314 shall remain in force and will not be disclaimed.

34. Payment Terms:

    a. The successful bidder shall keep accurate, document records of time, material and transportation allocable to the Contract. Related records will be available for audit purposes during normal business hours, as often as deemed necessary. Invoices for review and payment must be submitted no later than the 25th of the month to allow payment on the 15th of the following month.

    b. Requests for payment must be submitted to:

Mr. David L. Winslow
Department of Public Works
475 Valley Street
Manchester, NH 03103

35. The Public Works Director may terminate the contract for breach by the Contractor of any of the provisions of the contract by giving the Contractor ten (10) days' notice by registered mail.

36. The City may terminate the Contract at any time by giving written notice to Contractor of such termination and specify the effective date thereof, at least ten (10) days before the effective date of such termination.

FAILURE TO COMPLY WITH THESE REQUIREMENTS COULD RESULT IN THE CANCELLATION OF AN ORDER OR CONTRACT

STANDARD SPECIFICATIONS
FOR ROAD, DRAIN & SEWER CONSTRUCTION

These specifications are intended to relay to developers, contractors and other builders and trades, information concerning the Department of Highways' requirements relative to all construction under its jurisdiction in the City of Manchester, NH.

To facilitate this end, the Standard Specifications have been divided into three parts as follows:

PART I -- PUBLIC IMPROVEMENTS

Part I of the Standard Specifications outlines the Department's requirements concerning public improvements included in site development and subdivision projects. These requirements shall also apply to off-site improvements conducted within streets, rights-of-way, easements or other public lands belonging to the City of Manchester, New Hampshire.

All work relative to the above shall be conducted according to Section V of this part and the Technical Specifications as outlined in Part III.

PART II -- CONTRACT GENERAL PROVISIONS

Part II of the Standard Specifications outlines the Department's contractual requirements concerning work for road, drain and sewer projects along with other related work. These requirements shall apply to all such work contracted by the City of Manchester, Department of Highways and shall be considered a part of all proposals.

PART III -- TECHNICAL SPECIFICATIONS

Part III of the Standard Specifications outlines the Department's detailed requirements concerning the control of material, rules of construction and basis of payment. Supplemental Specifications not yet considered standard and Special Provisions for explaining items of work unique to a specific project, will be included in the proposal forms prepared by the Department.

The sections included in this part along with any Supplemental Specifications and Special Provisions, shall be considered a part of all proposals.

BIDDER QUALIFICATIONS

The Department of Public Works requires all bidders for this Contract to furnish information to show satisfactory evidence of his/her ability and experience to perform this work. The Department of Public Works may request the bidder submit financial information to help further determine he/she has substantial capital to complete the Contract. The Department of Public Works reserves the right to reject bids if it is determined there is insufficient evidence to support the completion of work by the bidder

The Bidder must submit the following:

Company Name: _____
Years in Business: _____
Estimated Percent of Work to be Sublet on Contract: _____

Work History – provide information on six similar successfully completed jobs

1. Project Name: _____
   Scope of Work: _____
   Project Location: _____
   Owner Contact - Name: _____
   Address: _____
   _____
   _____
   Telephone #: _____

2. Project Name: _____
   Scope of Work: _____
   Project Location: _____
   Owner Contact - Name: _____
   Address: _____
   _____
   _____
   Telephone #: _____

3. Project Name: _____
   Scope of Work: _____
   Project Location: _____
   Owner Contact - Name: _____
   Address: _____
   _____
   _____
   Telephone #: _____

4. Project Name: _____
Scope of Work: _____
Project Location: _____
Owner Contact - Name: _____
Address: _____
_____
_____
Telephone #: _____

5. Project Name: _____
Scope of Work: _____
Project Location: _____
Owner Contact - Name: _____
Address: _____
_____
_____
Telephone #: _____

6. Project Name: _____
Scope of Work: _____
Project Location: _____
Owner Contact - Name: _____
Address: _____
_____
_____
Telephone #: _____

List of Equipment - provide list of equipment owned that will be used to complete the Work (provide separate sheet if needed):

_____
_____
_____
_____
_____
_____
_____
_____
_____

BID SECURITY

The undersigned agrees to comply with the requirements as to the conditions of employment, wage rates and hours of labor set forth in the Form of "Contract Agreement". The undersigned hereby agrees to complete all the work shown or specified under this contract and as shown on the contract drawings within 365 consecutive calendar days from the date specified in the Notice to Commence Work and he further agrees that the OWNER may retain from the moneys that are or which may become due an amount of two hundred dollars ($200.00) plus engineering charges for each and every calendar day (Sunday and holidays excluded) of time consumed in completing the work beyond the time conditions stipulated above or any extension of time that is duly authorized and such amount so to be retained, is hereby agreed to be liquidated damages accruing to the OWNER incident to such delay.

The undersigned agrees that if he is selected as CONTRACTOR, he will within ten (10) days, (Saturdays, Sundays and legal holidays excluded) after presentation thereof by the "Awarding Authority", execute a contract in the form attached hereto and furnish a Performance Bond and also a labor and materials or Payment Bond, each of a surety company registered and licensed to do business in the State of New Hampshire and satisfactory to the OWNER and each in the sum of at least one hundred percent (100%) of the contract price, the premiums for which are to be paid by the CONTRACTOR and are included in the bid price.

The undersigned understands that the OWNER reserves the right to reject any and all bids and to waive any informalities in the bidding.

_____

Contractor's Signature

_____

Title

_____

Date

Certificate of Acknowledgment of Contractor, if a Corporation

State of _____,
ss:
County _____,

On this _____ day of _____, 2016

before me personally came _____

to me known, who being duly sworn did say as follows:

that he resides at: _____

and is the _____

of _____

the corporation described herein and which executed the foregoing instrument; that he knows the corporate seal of said corporation; the seal affixed to the foregoing instrument is such corporate seal and it was so affixed by order of the Board of Directors of said corporation and by the like order, he signed thereto his name and official designation.

_____
Notary Public (seal)

My commission expires:_____

PROPOSAL
MICROSURFACING AND FOG SEAL TREATMENTS-FY17

The City of Manchester acting through its Department of Public Works hereinafter called the "Awarding Authority", requests bids for the furnishing of all labor, equipment and materials required for the construction of the "**MICROSURFACING AND FOG SEAL-FY17**" in accordance with the plans and specifications prepared by the City of Manchester, Department of Public Works.

The Bidder declares that the attached Proposal therein referred to has been carefully examined and is understood. It is proposed and agreed, if the bid is accepted, to Contract with the Owner to the required work in the manner set forth.

The undersigned as Bidder declares that the only person or parties interested in this proposal as principals are those named herein; that this Proposal is made without collusion with any other firm, that the undersigned has carefully examined the location of the proposed work, the proposed form of contract and the plans and specifications therein referred to, and the undersigned proposes and agrees if this Proposal is accepted, he will contract with the "Awarding Authority" to provide all the necessary labor, machinery, tools, apparatus and other means of construction to do all the work and furnish all the materials specified in the contract in the manner and time therein described and according to the requirements of the Engineer therein set forth and the undersigned will take full payment therefore, the following unit and total prices:

Total price of this Proposal (for comparison of bids) based on the estimated quantities is:

_____ $_____

Total Price In Words Total Price In Figures

CONTRACTOR: _____

BY: _____

TITLE: _____

It is agreed that the total price presented above is to be used solely for the comparison of bids to determine the apparent low bidder.

Addendums received _____

PROPOSAL

The undersigned agrees that this Bid shall be good and may not be withdrawn for a period of sixty (60) calendar days after the scheduled closing time for receiving bids.

This Proposal includes Addenda No.:_____

_____
Contractor (Bidder) (seal)

By:_____
(Signature and Title)

Address:_____

_____

Being a (corporation incorporated)
(under the laws of the)
(State of _____)
(Partnership,)
(Individual)

Composed of Officers, partners, or owner, as follows:

_____

_____

_____

_____

_____

CITY OF MANCHESTER
Department of Public Works

INFORMATION REPORT

PROJECT:	MICROSURFACING AND FOG SEAL TREATMENTS-FY17
DATE BIDS OPENED:	**At 2:00 P.M., June 21, 2016**
PROJECT TYPE:	Application of microsurfacing and fog seal treatments to various City roadways
CONTRACT PERIOD:	The contract period for this project shall be 365 calendar days beginning at the date of notice to proceed.
PROPOSAL GUARANTEE:	$10,000.00

Bid Item Number	Estimated Quantity	Unit	Description (Bid Price in Words)	Unit Price (Bid in Figures)	Total Price (Bid in Figures)
409.1	25,000	SY	FOG SEAL SURFACE TREATMENT _____dollars and _____cents per SY.		
414.1	25,000	SY	MICROSURFACE TREATMENT-CONV. _____dollars and _____cents per SY		
602.55	100	EA	ADJUSTING MH AND CB FRAMES _____dollars and _____cents per EA		
618.109	1	ALL	UNIFORMED OFFICERS AND FLAGMEN Ten Thousand dollars and no cents. per ALL.	$10,000.00	$10,000.00
619	1	L.S.	MAINTENANCE OF TRAFFIC _____dollars and _____cents per L.S.		
629	1	ALL	TESTING OF MATERIALS One Thousand Dollars and no cents per ALL.	$1,000.00	$1,000.00
632.0104	5,000	LF	REFLECT. PAINT , 4" SINGLE SOLID LINE _____dollars and _____cents per LF.		
632.0204	5,000	LF	REFLECT. PAINT , 4" SINGLE BROKEN LINE _____dollars and _____cents per LF.		
632.0304	10,000	LF	REFLECT. PAINT , 4" DOUBLE SOLID LINE _____dollars and _____cents per LF.		
632.0504	5,000	LF	REFLECT. PAINT , 4" DOUBLE LINE (SOLID W/ BROKEN) _____dollars and _____cents per LF.		
632.3112	500	LF	REFLECT. THERMOPLASTIC, 12" SINGLE SOLID LINE _____dollars and _____cents per LF.		

632.36	1,000	SF	REFLECT. THERMO, ARROW, WORD OR SYMBOL _____dollars and _____cents per SF.		
632.8	1	LS	TEMP. RAISED PLASTIC PAVEMENT MARKERS _____dollars and _____cents per LS		
632.9	3,000	SF.	OBLITERATE PAVEMENT MARKING _____dollars and _____cents per SF.		
692	1	L.S.	MOBILIZATION _____dollars and_____cents per L.S.		
900	24	HR	STREET SWEEPING _____dollars and_____cents per HR		
TOTAL BID (in Words)	_____ _____ _____ ___				

Schedule of Unit Costs

Bidder shall provide the following Unit Prices. The prices shall be used for informational purposes only and will not be included in the Total Bid amount above.

CAPE SEAL SURFACE TREATMENT $_____ /SY

MINIMUM QUANTITY _____ SY

BID BOND
MICROSURFACING AND FOG SEAL TREATMENTS-FY17
FY17-500-03

The undersigned as bidder, understands and agrees that the quantities of work as given for each item in this Proposal are only approximate and are assumed solely for the comparison of proposals. They are not guaranteed to be accurate statements or estimates of the quantities of work to be performed under this contract and any departures therefrom, will not be accepted as valid grounds for any claim or loss of profits. In case of variation between unit prices and total prices stated by the bidder, the unit prices will be considered to be his bid.

The undersigned further agrees to comply with the requirements as to conditions of employment, wage rates and hours of labor set forth in the form of Contract Agreement.

The undersigned agrees that if he is selected as CONTRACTOR, he will, within ten (10) days, Saturdays, Sundays and legal holidays excluded, after presentation thereof by the awarding authority, execute a contract in the form attached hereto and furnish a Performance bond and also a labor and materials or Payment Bond, each of a surety company registered and licensed to do business in the State of New Hampshire satisfactory to the "Awarding Authority" and each in the sum of at least one hundred percent (100%) of the contract price, the premiums for which are to be paid by the Contractor and are included in the various unit prices bid.

Accompanying this Proposal under separate cover is Ten Thousand Dollars ($10,000.00) in the form of a Bid Bond, Cashier's Check or Certified Check* payable to the Department of Public Works of the City of Manchester.

The undersigned understands that the OWNER reserves the right to reject any and all bids and to waive any informalities in the bidding.

*Bidder will cross out words which do not apply.

_____

Contractor's Signature Date

_____

Title

MICROSURFACING AND FOG SEAL TREATMENTS-FY17
FY17-500-03

PROSECUTION OF THE WORK

Description of the Work:

This contract consists of the application of microsurfacing and fog seal treatments to various City roadways.

Utilities:

There are utility installations in the project area belonging to, but not necessarily limited to, the following:

Company	Address	Telephone
Comcast	751 E Industrial. Dr., Manchester	626-9900
National Grid	130 Elm Street, Manchester	625-4000
Manchester Fire Dept.	100 Merrimack St., Manchester	669-2256
Manch. Water Works	281 Lincoln St., Manchester	624-6494
Fairpoint Communications	100 Gay Street, 2nd Fl, Manchester	645-2700
Eversource	12 Bellemore Drive, Bedford	1-800-662-7764

Prosecution:

It is understood that the Contractor will match his work schedule with that of the Department of Public Works and other utility companies as applicable.

Due to the limited funding for this work, the City reserves the right to delete any part of the work in order to keep expenditures with the limits of available funds.

Contractor and City will coordinate with the utility companies to raise valve structures as needed.

Traffic Control

Traffic control by uniformed officers shall be in accordance with Section 618 of the Standard Specifications, and will be paid as an allowance under the appropriate pay item.

The placement and use of construction signs and warning devices, cones, delineators, etc. to maintain safe passable traffic during work shall be paid for under the lump sum Item 619 – Maintenance of Traffic.

Public Convenience and Property Protection

The Contractor shall be aware that he will be required to maintain access to all properties in the project area at all times or as otherwise directed by the City.

The City will be responsible for the proper and timely notification to local residents and businesses should any temporary interruption of their access or services be absolutely necessary.

Contract Documents

In the event of a conflict of interpretation in the Contract Documents, the following is the general order of precedence:

1. Special Contract Requirements*
2. Special Provisions
3. Supplemental General Conditions
4. General Conditions
5. Supplemental Specifications,
6. Specifications.
7. Drawings

*Includes Prosecution of Work, Traffic Control plan and Special Attentions.

Contract Period: The contract period for this project shall be 365 calendar days, beginning at the date of execution of the contract.

SUPPLEMENTAL SPECIFICATION

SECTION 409 – FOG SEAL

Description

1.1 Work Shall consist of the application of rejuvenating asphalt emulsion (fog seal) to seal fine cracks in the pavement surface and reduce oxidation.

Materials

2.1 The asphalt emulsion, **CMS-1PF**, shall contain a polymer and conform to the following specifications. The emulsion shall be certified as meeting this specification from the manufacturer, and shall not be diluted prior to application.

Property	Test Procedure (AASHTO)	Specification (min)	(max)
Emulsion Properties			
Viscosity, Saybolt-Furol, @ 77°F, SFS	T59	10	100
Storage, 24 hour, %	T59		1
Oil Distillate, %	T59		0.5
Sieve Test, %	T59		0.1
Residue by Distillation[(1)] @350°F, % Residue by Distillation, % by weight	T59	30	
Residue Properties From Distillation	T59		
Penetration @ 4C, 200g weight, 60 sec Residue by Distillation, % by weight	T49	30	
Residue Properties From Low Temp Evaporation	PP72-11, Procedure B		
Dynamic Shear, G*/sin @ 64oC, kPa	T315	Report Only	
Polymer Properties			
Swelling in rejuvenating agent, % max weight increase: 48 hrs	ASTM D471 [(2)]		40%
Tensile Strength (psi)	ASTM D412a [(3)]	800	
Glass Transition Temperature (Tg) – Midpoint by DSC (°C)	ASTM D7426 [(4)]	0	
Latex Density at 23°C (g/cm3)	ASTM D6937 [(5)]	1.00	1.05
Latex pH	ASTM E70 [(6)]	6.0	8.0
Test on Rejuvenating Agent			
Flash Point, COC, °F	T48	380	
Viscosity, 140°F, CST	201	50	175
Saturate, % by wt	ASTM D2007		30
Asphaltenes	ASTM D2007		1.0
Test on Residue			
Weight Change, %			6.5
Viscosity Ratio			3

[(1)] Exception to AASHTO T59: Bring the temperature on the lower thermometer slowly to 350°F plus or minus 10°F. Maintain this temperature for 20 minutes. Complete the total distillation in 60 plus or minus 5 minutes.

[(2)] Polymer Testing, Resistance to Swelling: Using a syringe, place 0.8 gm of latex into a 18 mm diameter DSR mold. Allow the sample to dry at ambient lab conditions (air conditioned) on the bench for 72 hours. Sample should be easily removable from the mold. Take the "button" out of the mold and place the sample into a forced air oven at 40°C (104°F) for 48 hours (on release paper). If

at the end of the ambient dry, the sample sticks to the mold, place it into the oven and check it after 1-2 hours. After 48 hours, cool and weigh the sample to the nearest 0.0001 gram and record the weight. Put ½ inch of Rejuvenating Agent into a 3 oz penetration tin. Place the "button" on the Rejuvenating Agent, and add another ½ inch Of Rejuvenating Agent, so that the "button" is covered. Put the cap on the penetration tin and place it into the 40°C oven for 48 hours. Remove the "button" from the Rejuvenating Agent, blot surface of the "button" to remove excess Rejuvenating Agent, cool the "button" to room temperature and weigh it. Calculate weight gain of the "button", express as a %.

(3) To prepare the polymer film, dilute the waterborne polymer to 40% Total Solids Content and pour 57 g into a Teflon or silicone release mold of dimensions 7" X 7" X ¼". Allow to dry at 23°C (73 °F) and 50% RH (controlled conditions) for 7 – 10 days total time, during which time the film should be flipped around once, preferable after 3 or 4 days. The film should be transparent in the end. To drive out any residual water, place the film in an oven at 50°C for 30 min. Dried film thickness should be 25 mil +/- 5 mils. Discard films <20mil. Cut out dumbbell-shaped test specimens of dimension 75 mm total length, 25 mm mid-section (L) and 4 mm width of mid-section. Grip in Instron machine with gap size 1 inch, use 8 inch/min cross-head speed.

(4) Use between 3 – 30 mg dry polymer. Instrument used is TA Q2000Differential Scanning Calorimeter (DSC). Heating rate is 20°C/min.

(5) Replace "Emulsified Asphalt" with "Latex" in text of test method. The testing temperature used should be 25 +/- 3°C. The calculation in Section 7 should be as follows:

D = (Wf –Wt) *0.1

S.G. = D/8.337

Where: Wf = Weight of filled cup (g), Wt = Weight of empty cup (g)

(6) A pH meter with automatic temperature measurement should be used in the evaluation with a calomel cell assembly or combination electrode. Calibration should be made using the procedure with the pH meter, according to ASTM method, prior to testing the pH of the latex. In Section 9, the procedure for measuring pH of the latex should be as follows:

- Place the electrode and probe into the dispersion that is to be measured and swirl the sample cup or beaker gently. (You may also use the probe in a stirring motion.)
- Wait for the reading to stabilize (usually less than a minute) and read/record this value. Note the temperature if not utilizing an ATC probe.
- Take the Electrode and ATC probes from the sample and rinse thoroughly with deionized water. Pat dry and place back into appropriate solution recommended by electrode manufacturer for storage.

2.2 Material Certifications and Testing

2.2.1 The Contractor, shall submit to the Engineer certified test results from the emulsion, polymer and rejuvenating agent manufacturers showing their products meet the specification. The Engineer will not accept test results dated more than 90 days from the date of bid opening.

2.2.2 Certifications and test results on the emulsion must be submitted to the Owner and approved by the Owner five (5) days prior to supplying material.

2.2.3 Prior to and during the project the Owner may require samples of the finished emulsion, rejuvenating agent and the polymer used in the emulsion to be submitted to the Owner designated laboratory for testing. All testing shall be at the Owner's expense.

2.3 Aggregate

2.3.1 The aggregate material shall be a dry, clean, dust and dirt-free, sound, durable, angular shaped manufactured specialty sand, such as that used as an abrasive (i.e., trade name "Black Beauty"), with a Mohs hardness of 6 to 8. The Contractor shall submit

manufacturer's technical data and a manufacturer's certification indicating that the specialty sand meets the requirements of the specification to the Engineer prior to start of construction. The sand must be approved for use by the Engineer and shall meet the following gradation limits.

Sieve Size	Percentage Retained
No. 8 (2.38 mm)	0
No. 16 (1.19 mm)	0-10
No. 20 (0.84 mm)	0-25
No. 30 (0.60 mm)	15-50
No. 40 (0.42 mm)	20-45
No. 50 (0.30 mm)	5-35
No. 70 (0.21 mm)	0-5
No. 200 (0.07 mm)	0-2

Equipment

3.1 Pressure distributor. The emulsion shall be applied with a computer rate-controlled asphalt distributor. The equipment shall be in good working order and contain no contaminants or diluents in the tank. Spreader bar tips must be clean, free of burrs, and of a size to maintain an even distribution of the emulsion. Any type of tip or pressure source is suitable that will maintain predetermined flow rates and constant pressure during the application process with application speeds under eight (8) miles per hour or seven hundred (700') feet per minute. Before use the equipment must be tested under pressure for leaks to ensure it is in good working order.

The distributor truck shall be equipped with a 12'foot minimum, spreader bar with individual nozzle control. The distributor truck shall be capable of specific application rates in the range of 0.05 to 0.25 gallons per square yard. These rates shall be computer-controlled rather than mechanical. The distributor truck shall have an easily accessible thermometer that constantly monitors the temperature of the emulsion, and have an operable mechanical tank gauge that can be used to cross-check the computer accuracy.

A distributor truck shall be provided, if necessary, equipped to effectively heat and mix the material to the required temperature prior to application. Heating and mixing shall be done in accordance with the manufacturer's recommendations. Care shall be taken not to overheat or over-mix the material.

The distributor shall be equipped to hand-spray the emulsion in areas identified either on the plans or by the Engineer, or not accessible to the distributor truck itself.

3.2 Aggregate spreader. The asphalt distributor truck shall be equipped with an aggregate spreader mounted to the distributer truck that can apply sand to the emulsion in a single pass operation without driving through the wet emulsion. The aggregate spreader shall be equipped with a variable control system capable of uniformly distributing the sand at the specified rate at varying application widths and speeds. The sander shall have a minimum

hopper capacity of at least 3,000 pounds of sand. Push-type hand sanders will be allowed for use around lights, signs and other obstructions.

Construction Requirements

4.1 Surface Preparation. The Contractor shall clean the pavement surface prior to placement with a power broom or road sweeper. Clean any muddy or dirty areas by flushing with water. Allow surface to dry completely prior to applying asphalt emulsion.

4.2 Test Strip

4.2.1 Test Strip shall be performed in order to determine the optimum rate to achieve coating without runoff or delayed curing times. Typical application ranges are 0.06 to 0.15 gallons per square yard for emulsion and 0.5 pounds per square yard for the aggregate.

4.3 Application

4.3.1 Asphalt emulsion shall be applied at the target rate(s) established during the test strip. Emulsion temperature shall be between 120° to 160°F before application and be kept within this range during construction. Reheating of the asphalt emulsion shall be done when the material is allowed to cool below 110°F. Reheating shall be done at a rate of no more than 25° F per hour.

4.3.2 If target application rates are not the optimum application rates to achieve proper coating, or if the break time is too long or too short, the Engineer shall be immediately notified the Engineer. Contractor shall adjust and document the new application rate

4.3.3 Streaking of the asphalt emulsion on the road surface will not be accepted. If the streaking is occurring, all operations shall cease until the Contractor corrects the issue and the Engineer is satisfied that streaking has been eliminated.

4.3.4 During the application Contractor shall ensure there are no deficiencies resulting from poor workmanship, flushing, tracking from equipment, surface patterns, and sweeping.

4.3.5 Contractor shall insure all required areas have been treated and minimum overlap on longitudinal joints and construction joints has been achieved.

4.4 Weather Limitations. Place the fog seal when both the pavement and atmospheric temperature is 50°F and rising. Do not place fog seal if the pavement surface is wet, rain is forecasted within 24 hours of placement, impending weather conditions do not allow for proper curing, or if temperatures are forecasted below 32°F within 24 hours.

4.5 Pavement Temperature. Fog seal shall not be applied if existing pavement temperature is 140°F or above.

Method of Measurement

5.1 Fog seal will be measured by the square yards of material applied to the nearest 0.1 of a square yard.

Basis of Payment

6.1 The accepted quantity of fog seal will be paid for at the contract unit price per square yard complete in place including all costs for preparation, application and cleanup

6.2 No additional compensation shall be made for additional work required to apply asphalt emulsion to areas outside the normal operating width of the distributor.

6.3 Traffic Control, when not provided as separate pay item, shall be considered subsidiary.

409.1	Fog Seal Surface Treatment	SY

SUPPLEMENTAL SPECIFICATION
SECTION 414 – MICRO-SURFACE SURFACE TREATMENT
Description

1.1 This work shall consist of preparing and applying thin asphalt overlay material (micro-surfacing), with or without mixture additives, which can restore the original service properties to worn but structurally sound pavements

1.1.1 Where required by the Engineer, additional Micro-surfacing mixture additives shall be utilized for the purpose of improving performance and durability.

Materials

2.1 Emulsified Asphalt. The emulsified asphalt shall be a quick-set, polymer-modified cationic type CSS-1H emulsion, and shall conform to the requirements specified in AASHTO M208 and ASTM 2397. It shall pass all applicable storage and settlement tests. The polymer shall be milled into the emulsion, or in the case of the HiMA (6% SBS) emulsion, may be pre-blended into the unmodified base asphalt (PG 64-28). The cement mixing test shall be waived for this emulsion.

2.2 Conventional Micro-Surfacing Residue Properties. Distillation of residue will be at a temperature of 350° F for 20 minutes. Softening Point (ASTM D36 or AASHTO T53) of the residue shall be not less than 140° F.

2.3 HiMA (6% SBS) Micro-Surfacing Residue Properties. For HiMA mixtures, emulsion testing by distillation method (ASTM D5 or AASHTO T49) shall yield a Softening Point (ASTM D36 or AASHTO T53) not less than 170° F.

2.4 Aggregate.

2.4.1 General. The mineral aggregate used shall be of the type and grade specified for micro-surfacing. The aggregate shall be manufactured crushed stone such as granite, slag, limestone, chat, or other high quality aggregate or combination thereof.

2.4.2 Aggregate Physical Requirements

a. **Grading.** The aggregate including natural fines when tested by AASHTO methods T11 or T27 or ASTM C117 or C136, should meet the referenced gradation requirements.

b. **Deleterious Substances.** To limit the permissible amount of clay-like fines in an aggregate, a sand equivalency value of 65 or higher is required when tested by ASTM 2419.

c. **Soundness**. The aggregate shall have a weighted loss of not more than 15% when the sodium sulfate test is used, or 20% when the magnesium sulfate test is used.

d. **Hardness**. The aggregate wear, from resistance to abrasion, shall be a maximum of 35% when using AASHTO T96 or ASTM C131 test methods.

2.5 Water. Water furnished for earthwork, pavement courses, dust control, and incidental construction. Furnish water free of substances detrimental to the work including soluble salts.

2.6 Modifiers. Special quick-setting emulsifier agents shall be blended into the asphalt emulsion. The emulsified asphalt shall be so formulated that when the paving mixture is applied at a thickness of one inch with the relative humidity at not more than 50% and an ambient air temperature of at least 75° F, the material will cure sufficiently so that rolling traffic can be allowed in one hour with no damage to the surface, as verified by the Engineer.

2.7 Additives. A mineral additive conforming to AASHTO M17 shall be introduced to the aggregate and may be either non-air entrained Portland cement or hydrated lime that is free of lumps, or other approved mineral additive. It may be accepted upon visual inspection. The amount of mineral additive needed shall be determined by the laboratory mix design and will be considered as part of the material gradation requirement. A liquid field control additive may be introduced and blended with water to provide effective control of the required quick-set properties. This additive shall be made available by the chemical supplier or emulsion manufacturer, and certified to be compatible with the mixture.

Engineering Design

3.1 Before work commences, the Contractor shall submit a signed and certified mix design covering the specific material(s) to be used on the project. This design shall be performed by a qualified, independent laboratory. Once the materials are approved, no substitution will be permitted unless first tested and approved by the laboratory preparing the mix design and approved by the Engineer.

3.2 Mix Design.

3.2.1 General. The independent laboratory shall develop the job mix design and present certified test results for the Contractor and Engineer's approval. Compatibility of the aggregate and emulsion shall be verified by the mix design. The job mix formula shall meet standard ISSA A143 micro-surfacing mix design requirements. All component material used in the mix design shall be representative of the material proposed by the Contractor for use on the project.

3.2.2 Specifications. The Engineer shall approve the design mix and all micro-surfacing materials and methods prior to use. The component materials shall be within the following limits.

Table 414-1 – Component Tolerances

Residual Asphalt	5% to 9% by dry weight of aggregate
Mineral Additive	0.5% to 3% by dry weight of aggregate
Polymer Modifier Additives	as required to provide specified properties
Water	As required to produce consistency
Fibers	0.05% to 0.25% by dry weight of aggregate as required to meet the performance requirements of the TxDOT Overlay Test (Tex-248-F) as described above.

Table 414-2 – Recommended Aggregate Gradation

Sieve Size	Master Range Type II (1/4”)	Master Range Type III (3/8”)	Production Tolerance
3/8” (9.5 mm)	100	100	± 7.0 / ± 7.0
#4 (4.75 mm)	90 – 100	70 – 90	± 7.0
#8 (2.36 mm)	65 – 90	45 – 70	± 4.0
#16 (1.18 mm)	45 – 70	28 – 50	± 4.0
#30 (0.60 mm)	30 – 50	19 – 34	± 4.0
#50 (0.30 mm)	18 – 30	12 – 25	± 4.0
#100 (0.15 mm)	10 – 21	7 – 18	± 4.0
#200 (0.075 mm)	5 – 15	5 – 15	± 2.0

*Note: All aggregate percentages are based on the total weight of the aggregate.

Table 414-3 Suggested Application Rates

Type II - Urban and Residential Streets:	
Single course	18-20 lb/SY
Cape seal wear course	25-28 lb/SY
Double course	28-32 lb/SY
Type III - Primary Routes	
Double course	30-36 lb/SY
wheel ruts	as required

Note: All application rates are dry aggregate weights exclusive of emulsion and all other additives.

Equipment

4.1 General. The equipment used by the Contractor shall be maintained in satisfactory working condition at all times to ensure a high quality product and include, but not be limited to the following:

4.2 Mixing Equipment.

4.2.1 The material shall be mixed by a self-propelled micro-surfacing mixing machine which shall be a continuous flow, continuous run mixing unit able to accurately deliver and proportion the aggregate, emulsified asphalt, mineral and field control additives, and water to a revolving multi-blade twin shafted mixer, and discharge the mixed product on a continuous flow basis.

4.2.2 The Contractor shall own or have available two (2) continuous flow, continuous run mixing machines to ensure highest quality, and to mitigate the effect of equipment breakdowns.

4.2.3 The machines shall have sufficient storage capacity for aggregate, emulsified asphalt, mineral and field control additives, and water to maintain an adequate supply to the proportioning controls.

4.2.4 The machines shall be equipped with self-loading devices which provide for the loading of materials while continuing to lay micro-surfacing, thereby minimizing construction joints.

4.3 Proportioning Equipment. Individual volume or weight controls for proportioning each material to be added to the mix, i.e., aggregate, emulsified asphalt, mineral and field control additives, and water shall be provided and properly marked. These proportioning devices are usually revolution counters or similar devices, and are used in material calibration and determining the materials output at any time.

4.4 Emulsion Pump. The emulsion pump shall be a heated, positive displacement type pump.

4.5 Spreading Equipment.

4.5.1 The surfacing mixture shall be spread uniformly by means of a mechanical type spreader box attached to the mixer, equipped with paddles to agitate and spread the materials throughout the box.

4.5.2 The spreader box width shall be capable of adjustment while paving in order to accommodate the changing width of some roadways without excessive overlaps.

4.5.3 A front seal shall be provided to insure no loss of the mixture at the road contact point. The rear seal and secondary strike-off shall act as the final strike-off, and both shall be adjustable. The mixture shall be spread to fill cracks and minor surface irregularities, and leave a uniform skid resistant application of material on the surface. The spreader box and rear strike-off shall be so designed and operated that a uniform consistency is achieved to produce a free flow of material to the rear strike-off.

4.5.4 The longitudinal joint where two passes join shall be neat in appearance, uniform and lapped.

4.5.5 All excess material shall be removed from the jobsite prior to opening the road.

4.5.6 The spreader box shall have suitable means provided to side-shift the box to compensate for variations in pavement width and longitudinal alignment.

4.5.7 A rut box shall be available to pre-fill wheel ruts when necessary prior to overlay to eliminate puddles or runoff interruption. The rut box shall be no less than 4' wide and no more than 6' wide.

4.6 Auxiliary Equipment. The Contractor shall supply a regenerative vacuum sweeper for cleaning the pavement, and provide traffic control equipment; hand tools and any support equipment shall be provided as necessary to perform the work.

4.7 Screening Plant. All aggregate shall be rescreened immediately prior to being loaded onto micro-surfacing equipment. The screening plant shall be equipped with a 3/8" screen to remove all oversized aggregate, and shall be capable of discharging screened aggregate directly onto the support equipment. Any material discharged onto the ground must be rescreened prior to use.

4.8 Calibration. Each mixing unit to be used in the performance of the work shall be calibrated in the presence of the Engineer prior to construction, or previous calibration documentation covering the exact materials to be used may be acceptable provided they were made during the same calendar year. The documentation shall include the individual calibration of each material at various settings, which can be related to the machine metering devices.

Construction Requirements

5.1 Pre-paving Meeting and Control Strip

5.1.1 The Contractor and all subcontractors shall be available for a pre-paving meeting a minimum of seven days prior to construction activities to discuss the plan. At the meeting, the Contractor shall provide a Job Mix Formula (JMF) of

the intended mixes, submittals of the intended crack seal, along with a Quality Control Plan (QCP). The submittals shall be approved by the Engineer prior to construction activities. The QCP shall provide information including but not limited to the following: Materials; Production Facility; Placement Equipment; Production and Field Personnel; Installation Plan; Quality Control Activities; and Traffic Control.

5.1.2 A Control strip will be required to ensure that the Engineer is satisfied with the installation quality including material properties and surface texture. The Control Strip may be a full day's production or a minimum of 1000 feet and must include a minimum of one (1) longitudinal joint. The material shall be installed in a similar location, with similar personnel, and similar equipment. If the materials, labor, or equipment change a new control strip will be required. A Control strip will be required for each Micro-surfacing material size and binder type placed.

5.2 Surface Preparation

5.2.1 All surface preparations shall be completed the Contractor prior to applying the wearing course. Cover all manhole covers, water boxes, catch basins and other such utility structures with plastic or building felt. Reference each for location and adjustment after paving.

5.2.2 All pavement markings shall be removed by approved methods which include:

a. High pressure water.
b. Steam or superheated water.
c. Mechanical devices such as grinders, sanders, scrapers, scarifiers and wire brushers.

5.2.3 Any temporary markings shall be removed by the Contractor immediately prior to microsurface installation.

5.2.4 If required, a leveling course(s) shall be installed using a rut box to pre-fill any wheel ruts greater than 3/8 of an inch as measured from peak to trough prior or micro mill the peaks and fill the troughs as Directed by the Engineer. All costs associated with wheel path leveling or micro milling are incidental to this Section.

5.2.5 All cracks and joints greater than 1/4 inch wide shall be cleaned and sealed by routing and providing a slightly concave shape with material approved by the Engineer. Cracks greater than 3/4 inch shall be crack sealed but not routed. Crack sealing shall be performed in conformance with Section 413 – Hot-Poured Crack Sealant and is incidental to this Section. No over banding will be permitted. The Crack Sealant shall provide not less than 5% polyester reinforcing fibers (PG + fibers), or a polymer and crumb rubber modified asphalt cement including not less than 3% polymers, 7% recycled tire crumb rubber (80 mesh), and 8% polyester fibers (PCRM + fibers).

5.2.6 All surface irregularities less than 1/2” deep shall be filled with material approved by the Engineer.

5.2.7 Surface irregularities greater than 1/2” deep shall be milled to a depth of 1” and filled with conventional hot mix asphalt or alternative material approved by the Engineer.

5.2.8 The entire area to be overlaid shall be thoroughly clean. A regenerative air sweeper shall be utilized to provide both water blasting and vacuum capabilities. This should be done after the joints have been sealed.

5.2.9 The surface shall have no free moisture present or ponding water.

5.3 Weather Limitations. The minimum pavement surface temperature for application of the microsurface and is 45°F in the shade, although it is recommended that the surface temperature be above 50°F. No freezing conditions are allowed in the first 24 hours, as the emulsion-based products require about one day to fully cure.

5.4 Microsurface Application.

5.4.1 General.

5.4.1.1 The surface should be pre-wetted by fogging ahead of the spreader box when required by surface and ambient conditions. The rate of application of the fog spray shall be adjusted during the day to suit temperatures, surface texture, humidity, and dryness of the pavement surface.

5.4.1.2 The Micro-surfacing mixture shall be of the desired consistency upon leaving the mixer and no additional materials should be added. A sufficient amount of material shall be carried in all parts of the spreader at all times so that a complete coverage is obtained. Overloading of the spreader shall be avoided. No lumping, balling, or unmixed aggregate shall be permitted.

5.4.1.3 No streaks, such as those caused by oversized aggregate, will be left in the finished surface. If excessive amounts of oversized aggregates appear in the mix, the job will be stopped until the Contractor proves to the Engineer that the situation has been corrected.

5.4.2 Tack Coat Application.

5.4.2.1 The Contractor shall be required to apply a tack coat to all roadways. The tack coat shall consist of one part emulsified asphalt (CSS-1H) and three parts water, and be applied with a distributor at a rate of 0.05-0.10 gallons per square yard. The application across the entire width of the roadway shall be uniform. Overlapping at the joints shall be

approximately 6 inches. Continuously monitor the rate of spray. The applicator truck shall be capable of providing digital outputs and a control strip shall be performed during the first day to ensure that the readout is accurate. The spray bar should be calibrated and able to be adjusted to within ± 10% of the design application rate. Coverage of the pavement must be even and uniform and, as such, it is important that there are no plugged nozzles on the spray bar.

5.4.3 Stockpile Management.

5.4.3.1 The Contractor shall take precautions to ensure that aggregate stockpiles do not become contaminated. The mineral aggregate shall be re-screened prior to being directly loaded onto Micro-surfacing equipment.

5.4.4 Joints.

5.4.4.1 No excessive buildup, uncovered areas or unsightly appearances shall be permitted on longitudinal or transverse joints. The Contractor shall provide suitable width spreading equipment to produce a minimum number of longitudinal joints throughout the project. When possible, longitudinal joints shall be placed on lane lines. Half passes and odd width passes will be used only in minimum amounts. If half passes are used, they shall not be the last pass of any paved areas.

5.4.5 Mix Stability.

5.4.5.1 The Micro-surfacing mixture shall possess sufficient stability so that premature breaking of the material in the spreader box does not occur. The mixture shall be homogeneous during and following mixing and spreading. It shall be free of excess water or emulsion, and free of segregation of the emulsion and aggregate fines from the coarser aggregate.

5.4.6 Handwork.

5.4.6.1 Areas which cannot be reached with the mixing machine shall be surfaced using hand squeegees to provide complete and uniform coverage. The area to be hand-worked shall be lightly dampened prior to mix placement. Care shall be exercised to leave no unsightly appearance from handwork.

5.4.6.2 The same type finish as applied by the spreader box shall be required. Handwork shall be completed immediately after the Micro-surfacing mixture is discharged from the spreader box.

5.4.7 Lines

5.4.7.1 Care shall be taken to ensure straight lines along curbs and shoulders. No runoff on these areas will be permitted. Lines at intersections will be kept straight to provide a neat workmanship appearance.

5.4.8 Rolling.

5.4.8.1 The Contractor will be required to have on site or have available two (2) 10-ton (maximum) pneumatic tired rollers to permit rolling of the micro-surface when the material has cured sufficiently to avoid damage by the roller. A minimum of two full coverage passes will be required at a maximum speed of 5 miles per hour. Tires shall be designed for a tire pressure of at least 90 pounds per square inch. A NHDOT approved anti-bonding lubricant may be used to reduce the likelihood of material tracking.

5.4.8.2 Additional rolling may be required at the direction of the Engineer.

5.5 Quality Control

5.5.1 Materials

5.5.1.1 The Contractor will permit the Engineer to take samples of the aggregate and asphalt emulsion to be used in the project at the Engineer's discretion. Gradation and sand equivalency tests may be run on the aggregate, and residual asphalt content test run on the emulsion. Test results will be compared to specifications. Tests will be run by a qualified laboratory at the expense of the City. The City must notify the Contractor within 24 hours of receiving a failing test result if any test fails to meet the specifications.

5.5.2 Microsurface Mixture

5.5.2.1 Samples of the mixture shall be taken daily and may be taken directly from the mixing unit(s). Consistency and residual asphalt content tests shall be made on the samples and compared to the specifications. Tests will be run by a qualified laboratory at the expense of the Contractor. The Contractor shall notify the City within 24 hours of receiving a failing test result and cease placement immediately if any test fails to meet specifications.

5.5.2.2 The Engineer may use the recorder and measuring facilities of the equipment to determine application rates, asphalt emulsion content, mineral and field control additives, and water.

5.5.3 Non-Compliance

5.5.3.1 If any two successive tests fail on the stockpile material, the job shall be stopped. It is the responsibility of the Contractor, at his own expense, to prove to the Engineer that the conditions have been corrected. If any two successive tests on the mix from the same machine fail, the use of the machine shall be suspended. It will be the responsibility of the Contractor, at his own expense, to prove to the Engineer that the problems have been corrected and that the machine is working properly.

5.6 Opening to Traffic

5.6.1.1 Protect the wearing course from traffic until the rolling operation is complete and the material has set-up sufficiently to resist tracking.

5.6.1.2 Special quick-setting emulsifier agents shall be blended into the asphalt emulsion. The emulsified asphalt shall be so formulated that when the paving mixture is applied at a thickness of one inch with the relative humidity at not more than 50% and an ambient air temperature of at least 75° F, the material will cure sufficiently so that rolling traffic can be allowed in one hour with no damage to the surface, as verified by the Engineer.

5.6.1.3 Allow treated areas to completely cure before opening to traffic. Cure is complete when clear water can be pressed out of the mix with a piece of paper without discoloring the paper.

5.6.1.4 Any excess micro-surfacing at project limits, including driveways and structures shall be removed before the end of each work day or opening to traffic. All locations will be subject to final approval by the Engineer.

Method of Measurement

6.1 Microsurface Treatment placed shall be measured by the square yard of road surface treated. Measurements shall be to the nearest 0.1 of a square yard.

Basis of Payment

7.1 Accepted quantities of Microsurface Treatment will be paid for at the contract unit price per square yard, complete in place including placement and clean up.

7.2 Pavement patching, crack sealing, structure adjustment or structure repair (if required) prior installation will be paid for under the appropriate Sections or be performed by others.

7.3 Work associated with wheel path rut filling prior to installation shall be subsidiary.

7.4 Micro-milling of surface irregularities prior to installation shall be subsidiary.

7.5 Traffic Control will be paid for under Section 619

7.6 Line striping shall be installed paid for under Section 632 – Reflectorized Pavement Markings or installed by others.

Pay Items and Units:

414. 1	Microsurface Treatment (Conventional)	SY
414. 2	Microsurface Treatment (Polymer modified or HiMa 6% SBS)	SY

SUPPLEMENTAL SPECIFICATION

SUPPLEMENTAL SPECIFICATION

Replace Section 632 - Reflectorized Pavement Markings in Standard Specifications with:

SECTION 632 -- REFLECTORIZED PAVEMENT MARKINGS

Description

1.1. This work shall consist of furnishing and placing white or yellow reflectorized paint pavement markings, preformed retroreflective pavement markings, reflectorized thermoplastic pavement markings, and temporary raised plastic pavement markers at the locations shown on the plans or as directed.

Materials

2.1. Paint shall conform to 708.

2.2. Glass beads for traffic paints shall conform to AASHTO M 247 and shall be Type 1 with moisture resistant coating.

2.3.Permanent Tape. Preformed retroreflective pavement marking tape for extended service life shall conform to ASTM D 4505, Retroreflectivity Level I or II, Adhesive Class 2 or 3, Skid Resistance Level A or B. Level I tape should be used when no external lighting source (i.e. overhead lighting) is present and Level II markings should be used when an external lighting source is present.

2.4.Temporary Tape. Retroreflective preformed pavement marking tape for limited service life shall conform to ASTM D 4592 Type I (Removable) or Type II (Non-removable). Type I tapes should be used in areas that require the tape to be removed in the future and Type II tapes should be used when the required service life of the tape is less than three months and can be left in place due to pavement overlay or other similar activity. Type I and II tapes shall have a minimum skid resistance of 45 BPN.

2.5.Preformed thermoplastic. Preformed thermoplastic material shall be composed of a resin resistant to degradation by motor fuels, lubricants etc. In conjunction with aggregates, pigments, binders, and glass beads which have been factory produced as a finished product. The thermoplastic material shall conform to AASHTO M249 with the exception of the relevant differences due to the material being supplied n a preformed state such as during time and flowability tests.

2.6. Preformed thermoplastic material shall have factory applied surface beads in addition to the intermixed beads at a rate of 10 pounds per 100 square feet of markings. It also shall contain a minimum of thirty percent (30%) intermixed graded glass beads by weight.

2.6.1. The surface, with properly applied and embedded surface beads, shall provide a minimum resistance value of 45 PN when tested according to ASTM E 303.

2.6.2. The material shall be applied at a thickness of 80 mils.

2.7.Extruded Thermoplastic Material

2.7.1. Material shall be homogeneously composed of pigment, filler, resins and glass beads. The pre-mix glass beads shall be uniformly distributed throughout the entire thickness of material. The material, when applied in accordance with the manufacturer's recommended procedures, shall be capable of resisting deformation by traffic. The material shall be tested in accordance with AASHTO T250 requirements.

2.7.2. The binder shall be either alkyd or hydrocarbon conforming to AASHTO M249. The binder shall be either alkyd or hydrocarbon conforming to AASHTO M249.

2.7.3. Binder shall consist of a mixture of synthetic resins, at least one of which is solid at room temperature, and high boiling point plasticizers. At least 1/3 of the binder composition shall be solid maleic-modified glycerol ester resin and shall be no less than 10 percent by weight of the entire material formulation..

2.7.4. Thermoplastic material shall not deteriorate by contact with sodium chloride, calcium chloride or other chemicals used to prevent roadway ice. The material shall also not deteriorate because of the oil content of pavement materials or from oil droppings or other effects of traffic.

2.7.5. Material, when formed into pavement markings, shall be readily renewable by placing an overlay of the same material directly over the old markings. The new material shall bond itself to the old markings in such a manner that no splitting or separation takes place.

2.8. Temporary Raised Plastic Pavement Markers

2.8.1. Markers shall be made from impact-resistant polyurethane plastic.

2.8.2. The marker's approximate dimensions are 4 inch width by 2 inch height. The marker shall two micro-prismatic reflective faces (one on each side). Micro-prismatic reflective faces approximate dimension 1/4 inch x 4 inches.

2.8.3. The base of the marker shall be fitted with a butyl rubber pad with a pressure sensitive adhesive capability of adhering to bituminous asphalt surfaces.

Construction Requirements

3.1. General.

3.1.1. All pavement markings of the type specified shall be applied at the locations shown on the plans or as ordered, and shall be in accordance with the Traffic Manual (MUTCD).

Traffic control operations in conjunction with placing markings shall conform to 619 and the Traffic Control Plan.

3.1.2. Longitudinal lines placed on tangent roadway segments shall be straight and true. Longitudinal lines placed on curves shall be continuous smoothly curved lines consistent with roadway alignment. All pavement markings placed shall meet the tolerance limits shown on the plans.

3.1.3. Broken lines shall consist of 15 foot line segments with 25 foot gaps and shall meet the tolerance limits shown on the plans.

3.1.4. Unless otherwise specified, widths of longitudinal markings shall be as follows:

Line Type	Width (inches)
Centerlines	4
Edge Lines	4
Lane Lines	4
Gore Markings	8
Cross Walks*	6
Parking Lines	4
Stop Bars	12

*- cross walk edge lines only, where required. Line widths for “piano key” style crosswalk shall be per detail.

3.1.5. Newly painted markings shall be protected from traffic until the paint is cured. The method of protection shall not constitute a hazard to the traveling public. Damage to any markings as a result of tracking shall be repaired by the Contractor.

3.1.6. For guidance in marking longitudinal lines, the Engineer will establish base line points at 50 foot intervals on curves and 100 foot intervals on tangent sections throughout the length of pavement to be marked under this section. All other markings shall be applied according to the physical pavement layout provided. The Contractor shall provide at least 7 days notice to the Engineer prior to beginning marking operations to allow for layout.

3.1.7. For resurfacing contracts, the Contractor's attention is directed to the special requirements contained in 619.3.3.

3.1.8. All clean up and disposal of solvents, residue, and the like shall be the responsibility of the Contractor and shall be performed in accordance with all applicable federal, state and local regulations.

3.2.Retroreflective Pavement Marking Paint.

3.2.1. All equipment used for highway striping shall be specifically designed and manufactured for that purpose by a company experienced in the design and manufacture of such equipment and approved for use. Equipment used for longitudinal lines shall be mounted on a truck having a minimum gross vehicle weight rating of 14,000 lb with a

minimum paint tank capacity of 60 gal, and shall have the capability of placing double lines up to 4 in. in width or singl e lines up to 12 in. in width in one pass. Each paint tank shall be plainly marked in a prominent place with the maximum filled capacity of the tank. Each tank shall have a mixer or aerator capable of combining and maintaining the ingredients of the paint into a thoroughly mixed and uniform mass. The paint shall be applied with an atomizing or airless spray type striping machine having the water base paint at a temperature of 105 ºF maximum in the heat exchanger and 85 – 105 ºF at the spray nozzle. Paint shall pass through a screen with a maximum opening of 1/8 in. located before the heat exchanger. A valve accessible for sampling shall be located in the paint feed line between the screen and the heat exchanger. The striping machine shall be equipped with an automatic paint stripe controller having skip-line capability to place broken lines in accordance with 3.1.3. A gauge reading paint temperature shall be mounted and conveniently displayed on the equipment. The equipment shall include a mechanical, glass-bead dispenser mounted not more than 12 in. behind the paint dispenser. All equipment shall be kept in good operating condition..

3.2.2. Immediately before applying the pavement marking paint to the pavement, the Contractor shall insure the surface is dry and entirely free from dirt, sand, grease, oil, or other foreign matter.

3.2.3. The surface temperature of the pavement shall be a minimum of 40 degrees F.

3.2.4. Paint shall be applied to a thickness of 20 mil wet

3.2.5. Glass beads shall be evenly applied through the entire paint thickness at a rate of 8 pounds to each gallon of paint. Glass beads shall be applied by pressurized methods for fast-dry paint and by pressurized or mechanical drop methods for regular-dry paint.

3.2.6. All clean up and disposal of solvents, residue, and the like shall be the responsibility of the Contractor and shall be performed in accordance with all applicable federal, state, and local regulations.

3.3.Preformed Retroreflective Pavement Marking Tape.

3.3.1. Preformed retroreflective pavement marking tape shall be applied at locations shown on the plans by mechanical or manual methods. Mechanical applications shall be suitable for all markings. Manual applications shall normally be used for transverse lines, symbols and legends. The manufacturer shall provide technical assistance for equipment operation and maintenance, and product applications.

3.3.2. Preformed retroreflective pavement marking tape shall be stored and applied as directed by the manufacturer. All markings applied after September 1 of any year shall be applied using the inlay method, unless specifically permitted by the Engineer. Prior to September 1, application by either the inlay or overlay method will be permitted, unless otherwise specified. When the inlay method is specified, or chosen by the Contractor, paving and marking operations shall be coordinated to meet the manufacturer's recommendations.

3.3.2.1. For the inlay method, the pavement markings shall be embedded in the pavement surface with a conventional steel wheel roller. The surface temperature of the pavement shall be within the range specified by the manufacturer and shall not deform or discolor the markings.

3.3.2.2. When applying pavement markings by the overlay method, the pavement surface shall be clean, dry and above the minimum temperature as specified by the manufacturer. The surface shall be broomed clean and all dust shall be removed using compressed air. When required by the manufacturer, a coat of primer/adhesive activator shall be applied.

3.3.3. The Contractor shall provide a copy of the manufacturer's storage and application recommendation to the Engineer upon delivery of the material to the project.

3.3.4. The required quantity of preformed retroreflective pavement marking tape shall be available at the project prior to the start of applicable pavement operations.

3.3.4.1. Material shall be delivered to the project in original containers. Each container shall be clearly marked to indicate the color of the material, a specific description of the contents, and the process batch or lot numbers.

3.3.4.2. Material found to be discolored or damaged in any way or material manufactured more than one year prior to installation shall not be used.

3.4.Retroreflective Thermoplastic Pavement Marking.

3.4.1. Thermoplastic pavement markings shall be applied to the road surface in a molten state by screed/extrusion with a surface application of glass beads.

3.4.1.1. All equipment used to apply thermoplastic pavement markings shall be constructed to provide continuous uniform heating at temperatures exceeding 400º F during mixing and agitation of the material. Equipment used for longitudinal lines shall be mounted on a truck having a minimum gross vehicle weight of 14,000 lb, and shall have the capability of placing double lines up to 4 inches in width or single lines up to 12 inches in width in one pass. The equipment shall operate so that all mixing and conveying parts, including the line dispensing device, maintains the material at the required plastic temperature. The use of pans, aprons or similar appliances which the dispenser overruns will not be permitted. The thermoplastic material shall be applied by the screed/extrusion method. The striping machine shall be equipped with an automatic stripe controller having skip-line capability to place broken lines in accordance with 3.1.3, and a glass bead dispenser located immediately behind the material dispenser. All equipment shall be kept in good operating condition.

3.4.1.2. A special kettle shall be provided for uniformly melting and heating the thermoplastic material. The kettle shall be equipped with an automatic thermostat control device and material thermometer for positive temperature control and to prevent overheating or underheating of the material. The heating kettle and application

equipment shall meet the requirements of the National Fire Underwriters, the National Fire Protection Association and state and local authorities.

3.4.2. Immediately before applying the thermoplastic to the pavement, the Contractor shall insure the surface is dry and entirely free from dirt, sand, grease, oil, or other matter which would prevent effective adhesion of the thermoplastic material to the pavement.

3.4.2.1. When recommended by the manufacturer of the thermoplastic material, a primer/sealer shall be applied to the pavement surface prior to the application of the thermoplastic material. The primer shall be void of solvent and water prior to the thermoplastic application.

3.4.3. Thermoplastic pavement marking materials shall not be applied when air and/or pavement surface temperatures are below 50º F or when the surface of the pavement contains any evidence of moisture.

3.4.4. Thermoplastic material shall be applied to the pavement at a thickness of 125 mils

3.4.5. Glass beads shall be evenly applied to the surface of the completed marking at a rate of 10 pounds per 100 square feet of markings. Glass beads shall be applied by pressurized or mechanical drop methods.

3.4.6. Preformed Thermoplastic. Preformed thermoplastic pavement markings shall be a resilient white thermoplastic product with uniformly distributed glass beads throughout the entire cross sectional area. The markings shall be resistant to the detrimental effects of motor fuels, lubricants, hydraulic fluids etc. The markings can be used for stop lines, legends, symbols, and crosswalks, and shall be capable of being affixed to bituminous concrete pavements by the use of the normal heat of a propane torch.

3.4.6.1. The markings shall be capable of conforming to pavement contours, breaks and faults through the action of traffic at normal pavement temperatures. The markings shall have resealing characteristics, such that they are capable of fusing with themselves and previously applied thermoplastic when heated with the torch.

3.4.6.2. The marking must be able to be applied on pavement with a surface temperature down to 40 ºF without any preheating of the pavement to a specific temperature.

3.5.Obliteration of Pavement Markings.

3.5.1. Pavement marking obliteration shall result in a minimum of pavement scar and shall obliterate all evidence of the existing pavement marking material. Removal may be performed by grinding, sand or water blasting, or other method(s) approved by the Engineer that do not materially damage the pavement surface.

3.5.2. “Painting” over pavement markings with paint, asphalt mixtures or any other material is prohibited.

3.5.3. Removal and disposal of pavement markings including, but not limited to retroreflectorized paint, retroreflective thermoplastic, preformed retroreflective tape and raised pavement markers shall be the responsibility of the Contractor in accordance with all applicable federal, state, and local regulations.

3.6. Temporary Raised Plastic Pavement Markers

3.6.1. Marker used shall be of the same color as the specified permanent marking.

3.6.1.1. Markers shall not be used in lieu of permanent retroreflective pavement markings

3.6.2. Marker shall be installed according to the manufacturer's recommendations.

3.6.3. Spacing of markers shall be per MUTCD.

Method of Measurement

4.1. Longitudinal reflectorized pavement markings will be measured by the linear foot, on the surface of the markings, for the type and width specified.

4.1.1. Broken lines will be measured including gaps between line segments.

4.2. Pavement arrows and pavement words of the type specified will be measured by the square foot, to the nearest 0.1 of a square foot.

4.3. Railroad crossing and do not block markings of the type specified will be measured by the square foot, to the nearest 0.1 of a square foot

4.3.1. Do not block border shall be paid for by the linear for the width of line specified.

4.3.2. Transverse lines and stop bars associated with railroad crossing symbols shall be paid for by the linear for the width of line specified.

4.4. Repair work ordered under 3.1.5 will not be measured.

4.5. Obliterate pavement marking lines of the type specified will be measured by the linear foot to the nearest foot of length of marking, with no adjustment for width.

4.6. Obliterate pavement marking symbols or words of the type specified will be measured by the square foot, to the nearest 0.1 of a square foot

4.7. Temporary raised plastic pavement markers shall be measured in lump sum. This will include all installation removal and replacement as needed.

4.8. Crosswalk markings will be measured by linear foot of surface markings applied at the widths specified.

Basis of Payment

5.1. The accepted quantities of longitudinal reflectorized pavement markings of the type specified will be paid for at the contract unit price per linear foot complete in place.

5.2. The accepted quantities of pavement arrows, and pavement words, of the type specified will be paid at the contract unit price per square foot, complete in place.

5.3. The accepted quantities of railroad crossing markings, and do not block markings of the type specified will be paid at the contract unit price per square foot, complete in place.

5.4. The accepted quantities of transverse and longitudinal lines associated with railroad crossing markings, and do not block markings of the type specified will be paid for at the contract unit price per linear foot complete in place.

5.5. Additional equipment or labor necessary to apply preformed retroreflective pavement marking tape by the inlay method will be subsidiary.

5.6. The accepted quantities of obliterate pavement marking lines will be paid for at the Contract unit price per linear foot. Payment will not be made for the removal of removable pavement marking tape.

5.7. The accepted quantities of obliterate pavement marking symbols or words of the type specified will be paid for at the Contract unit price per each. Payment will not be made for the removal of removable pavement marking tape.

5.8. No payment will be made for those units of pavement markings which do not conform to the requirements of this section.

5.9. Accepted quantities of temporary raised plastic pavement markers will be paid at the Contract lump sum price, which will constitute full compensation for all installation, removal and replacement of the markers as needed or directed by the Engineer.

KEY TO ITEM NUMBERS FOR PAVEMENT MARKINGS

Item Number

632. A B C D E	Item number
632.	Section number
A	Material
B	Type of marking
C D	Width of line

.A Material
.0 Reflectorized Paint
.1 Preformed Retroreflective Tape, Type I (Removable)

.2	Preformed Retroreflective Tape, Type II(Non-Removable)	
.3	Retroreflective Thermoplastic	
.8	Temporary Raised Plastic Pavement Markers	Lump Sum
.9	Obliterate Pavement Marking	Square Foot

B	Type of Marking	
1	Single Solid Line	
2	Single Broken Line	
3	Double Solid Line	
4	Double Broken Line	
5	Double Line (Solid with Broken)	
6	Arrow, Word or Symbol	Square Foot

C	D	Width of line	
0	4	4 Inch Line	Linear Foot
0	6	6 Inch Line	Linear Foot
0	8	8 Inch Line	Linear Foot
1	2	12 Inch Line	Linear Foot
1	8	18 Inch Line	Linear Foot
2	4	24 Inch Line	Linear Foot

Examples:

632.0104	Reflectorized Paint , 4" Solid Line
632.1304	Preformed Retroreflective Tape, Type I, 4” Double Solid Line
632.36	Retroreflective Thermoplastic, Arrow, Word or Symbol
632.8	Temporary Raised Plastic Pavement Markers

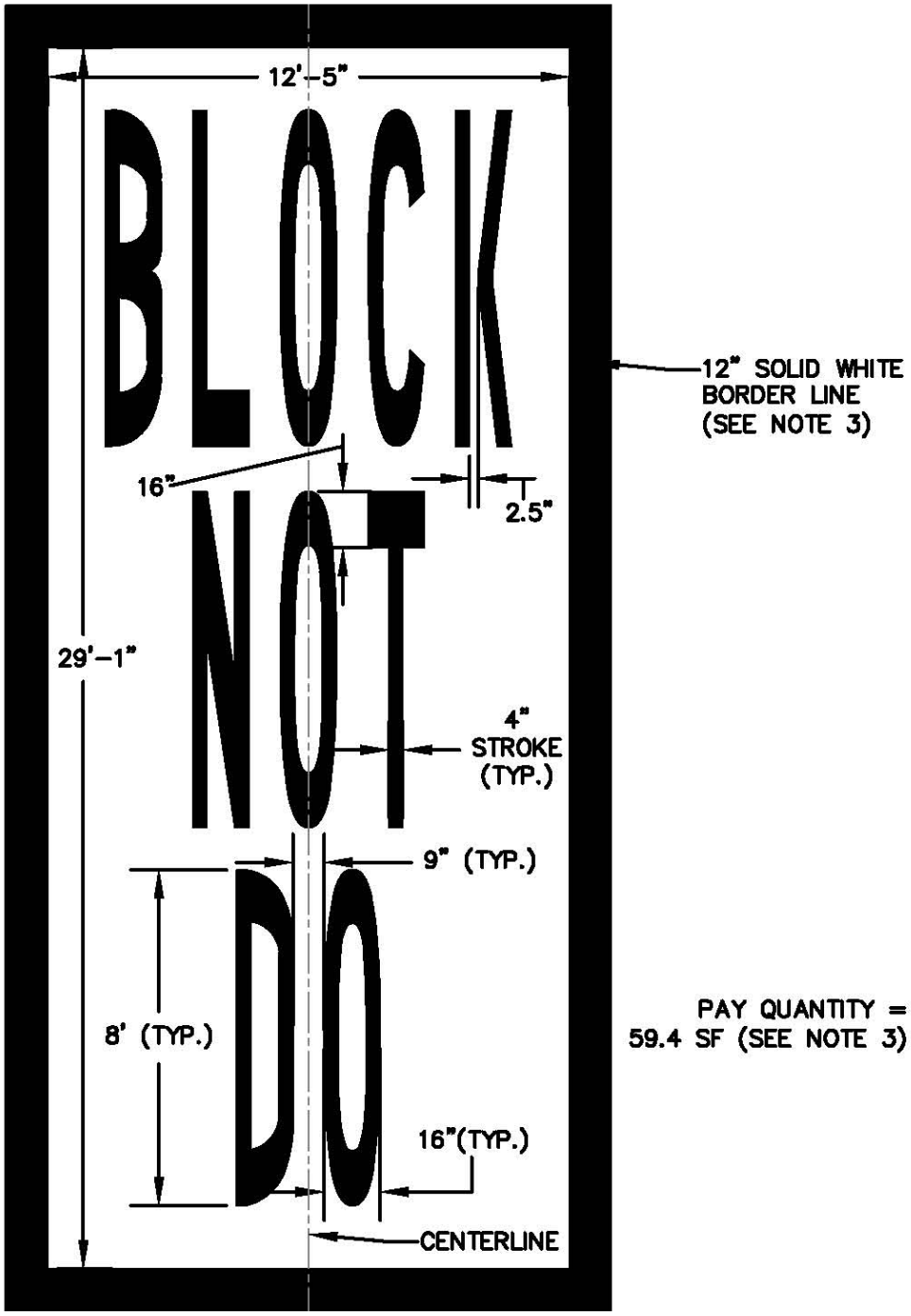

1) CENTERLINE OF LETTERING SHALL BE PLACED ON THE CENTERLINE OF LANE OF TRAVEL. FOR MULTIPLE LANES, CENTERLINE OF THE COMBINED LANES SHALL BE USED.

2) PAINT USED SHALL BE WHITE THERMOPLASTIC.

3) PAY QUANTITY FOR LETTERS ONLY, 12 INCH BORDER LINES WILL BE PAID FOR BY LINEAR FOOT (87.0 LF).

"DO NOT BLOCK" INTERSECTION DETAIL

S:\DWG\DETAILS\632-1 DO NOT BLOCK.DWG

NOT TO SCALE
FIG. 632-1

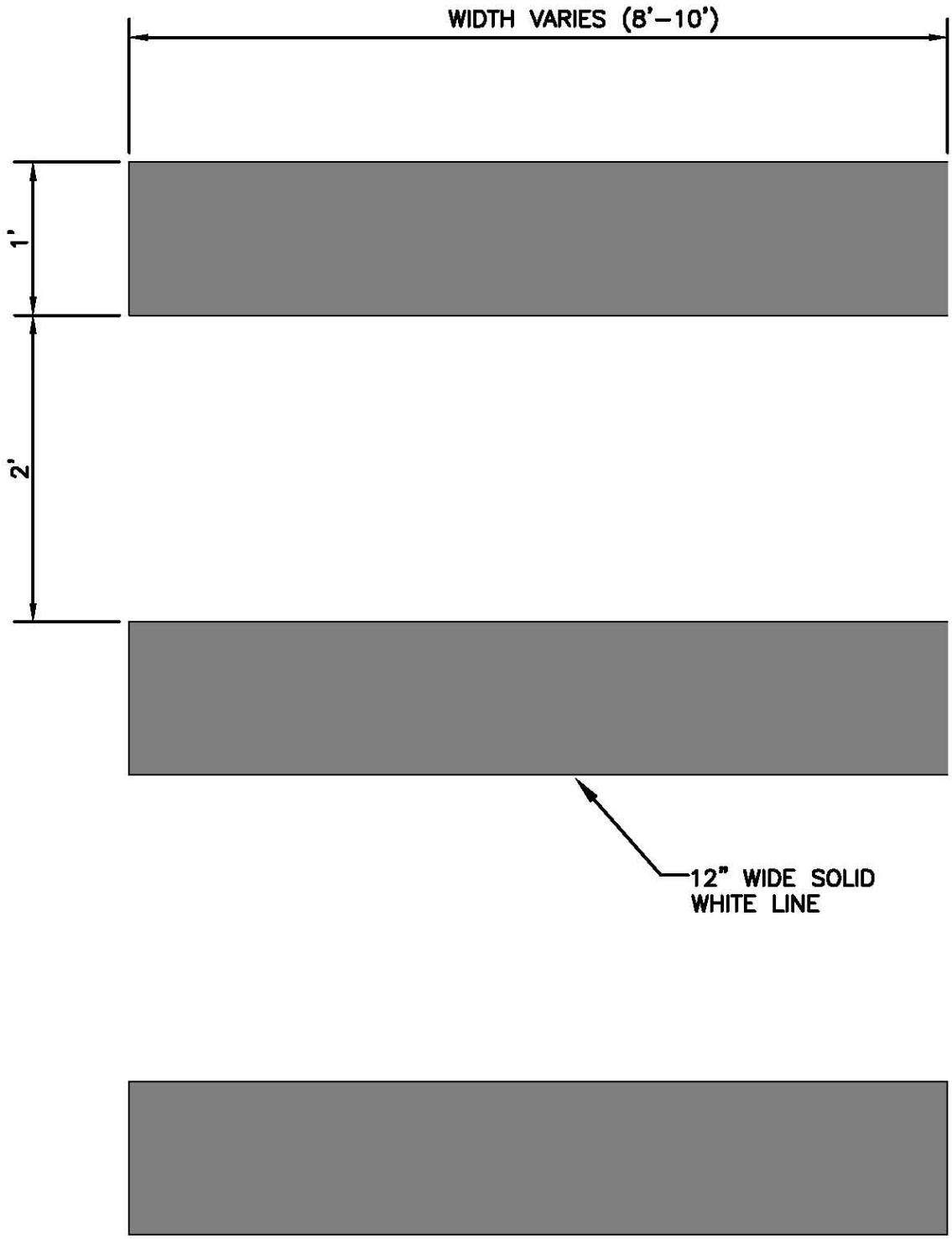

NOTE: ALL MARKINGS TO BE THERMOPLASTIC

TYPICAL CROSSWALK

S:\DWG\DETAILS\632-1 CROSSWLK.DWG

NOT TO SCALE
FIG. 632–2

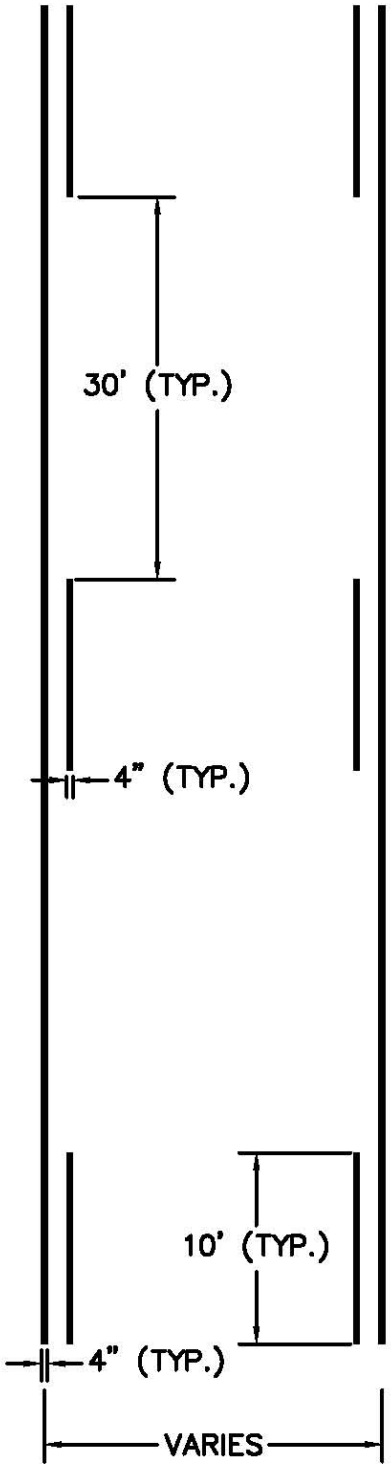

FIGURE 632-3 DOUBLE LINE (SOLID WITH BROKEN)

NOT TO SCALE

FIG. 632-3

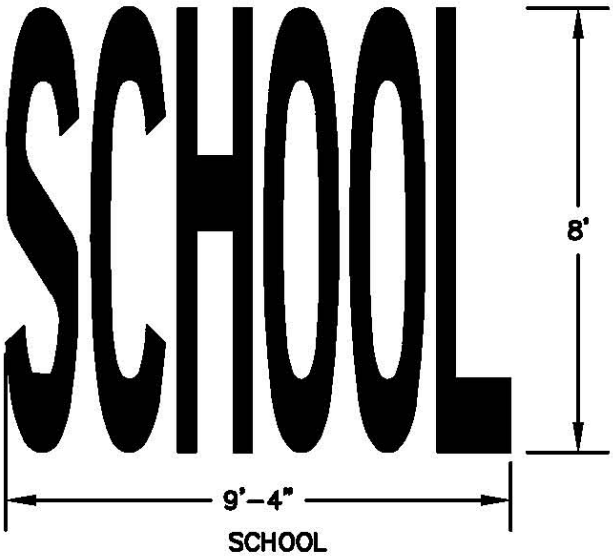

SCHOOL
PAY QUANTITY = 34.7 SF

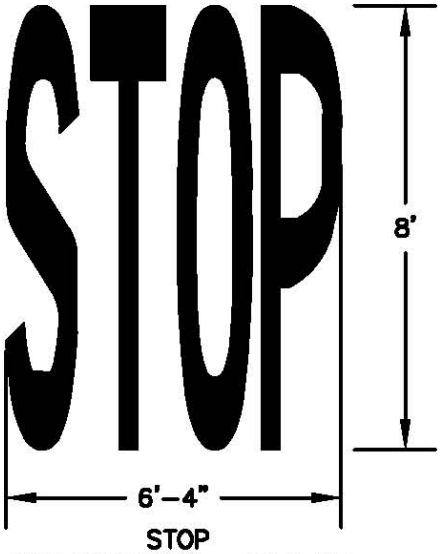

STOP
PAY QUANTITY = 22.2 SF

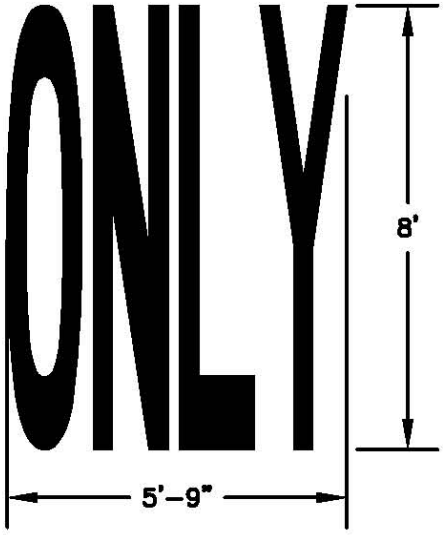

ONLY
PAY QUANTITY = 22.3 SF

PAY QUANTITIES FOR STANDARD (8FT) LETTERS AND NUMERALS			
A	5.8	S	6.1
B	7.7	T	4.0
C	5.3	U	6.6
D	6.8	V	5.0
E	6.3	W	7.0
F	5.0	X	4.3
G	6.3	Y	4.2
H	6.6	Z	5.7
I	2.0	1	2.0
J	3.9	2	5.8
K	6.4	3	5.8
L	4.1	4	5.1
M	9.0	5	6.4
N	7.7	6	6.8
O	6.3	7	3.8
P	5.8	8	7.0
Q	6.7	9	6.8
R	6.8	0	6.3
		–	0.5

1. WORDS SHALL RETROREFLECTIVE WHITE AND CONFORM TO THE LATEST VERSION OF THE MUTCD
2. MULTI WORD MESSAGES SHALL READ "UP". FIRST WORD SHALL BE NEAREST TO APPROACHING DRIVER
3. THE WORD ONLY SHALL NOT BE USED WITH THROUGH OR COMBINATION ARROWS AND SHALL NOT BE USED ADJACENT TO A BROKEN LANE LINE. A WORD/SYMBOL SHALL PRECEDE THE WORD "ONLY".
4. PREFORMED WORDS SHALL BE CUT BY THE MANUFACTURER. ALL PAINT SHALL BE THERMOPLASTIC

WORD PAVEMENT MARKINGS

S:\DWG\DETAILS\632-4 WORD.DWG

NOT TO SCALE
FIG. 632-4

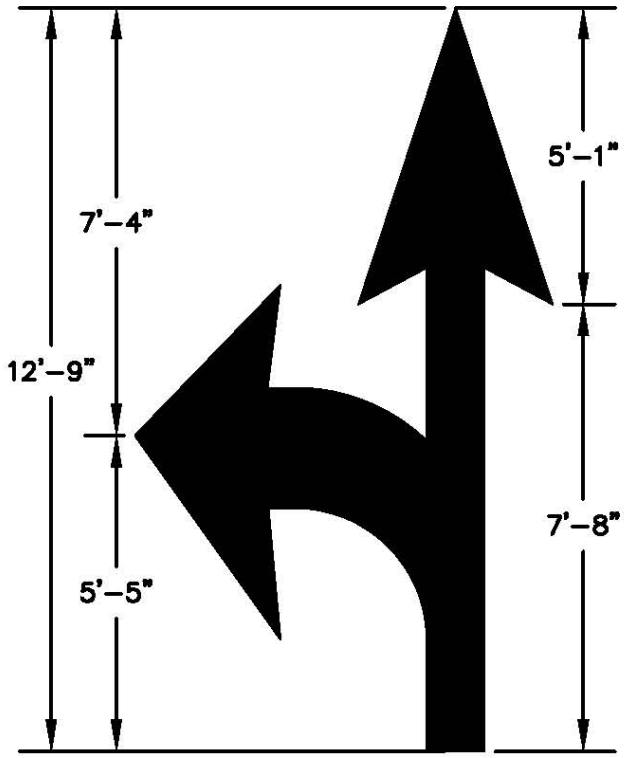

COMBINATION ARROW
PAY QUANTITY = 28.8 SF

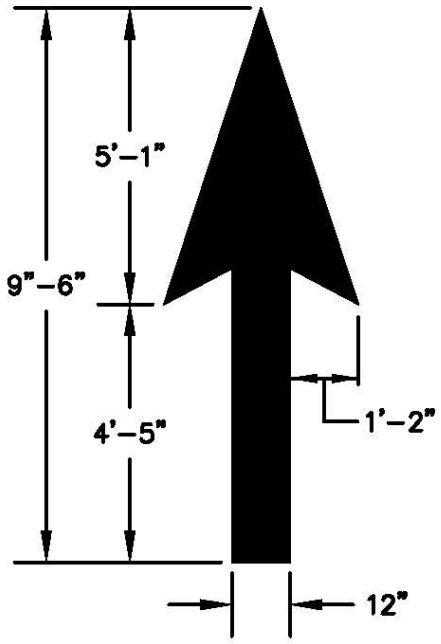

THROUGH (STRAIGHT) ARROW
PAY QUANTITY = 12.5 SF

1. ARROWS SHALL RETROREFLECTIVE WHITE AND CONFORM TO THE LATEST VERSION OF THE MUTCD.
2. PREFORMED ARROWS SHALL BE CUT BY THE MANUFACTURER. ALL PAINT SHALL BE THERMOPLASTIC.
3. COMBINATION ARROWS MAY BE COMPRISED OF 2 SINGLE ARROWS (I.E. TURN AND THROUGH) HOWEVER SHAFTS SHALL COINCIDE AS SHOWN.

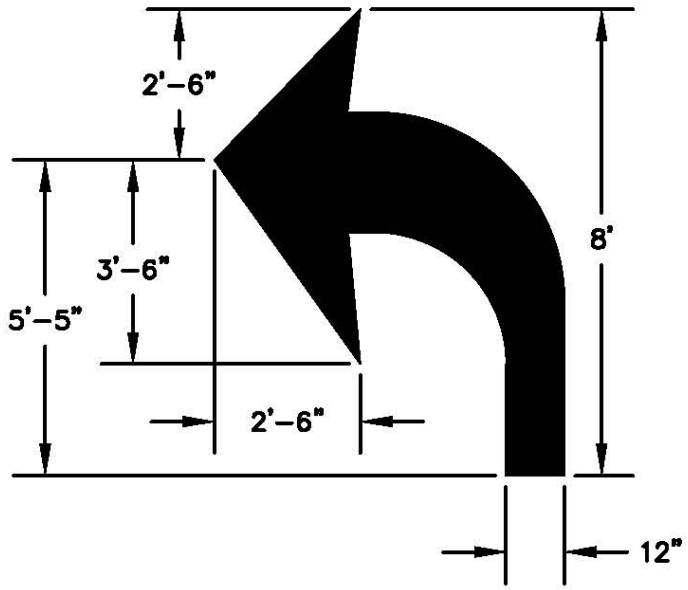

TURN ARROW
(RIGHT TURN OPPOSITE IN KIND)
PAY QUANTITY = 17.0 SF

ARROW PAVEMENT MARKINGS

S:\DWG\DETAILS\632-4 ARROW.DWG

NOT TO SCALE
FIG. 632-5

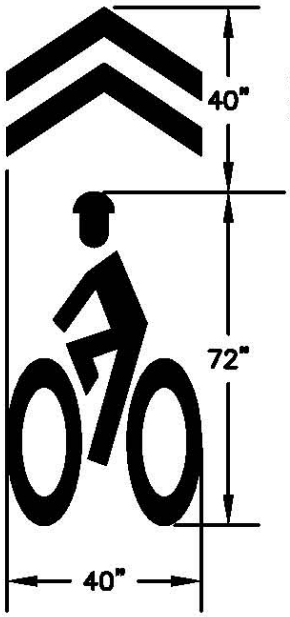

SHARROW SYMBOL
PAY QUANTITY = 3.3 SF

BIKE LANE SYMBOL
PAY QUANTITY = 8.1 SF

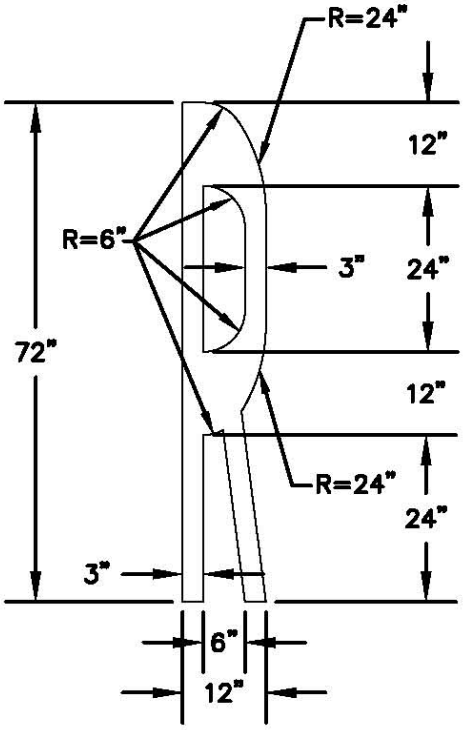

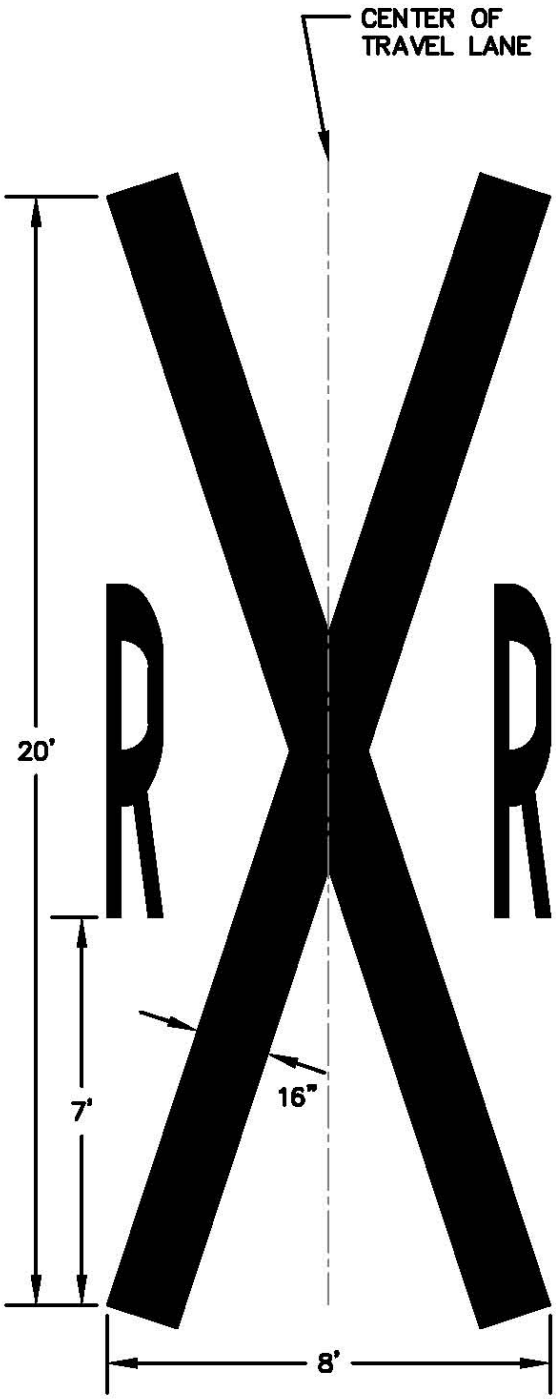

RAIL CROSSING SYMBOL
PAY QUANTITY = 63.6 SF

RAIL CROSSING AND BIKE SYMBOL DETAILS

S:\DWG\DETAILS\632-6 BIKE AND RAIL

NOT TO SCALE
FIG. 632-6

1. RXR SYMBOL WILL BE PAID FOR BY THE SQUARE FOOT, TRANSVERSE LINES AND STOP BARS (24'" WIDE) WILL BE PAID FOR BY THE LINEAR FOOT.

2. ON MULTI LANE ROADS THE TRANSVERSE LINES SHOULD EXTEND ACROSS ALL APPROACH LANES AND INDIVIDUAL RXR SYMBOLS SHOULD BE USED IN EACH LANE.

3. STOP LINE SHALL BE PERPENDICULAR TO HIGHWAY CENTERLINE.

4. DISTANCE SHALL BE 15 FEET MINIMUM, 20 FEET MAXIMUM FROM NEAREST RAIL, OR APPROXIMATELY 8 FEET FROM GATE IF PRESENT.

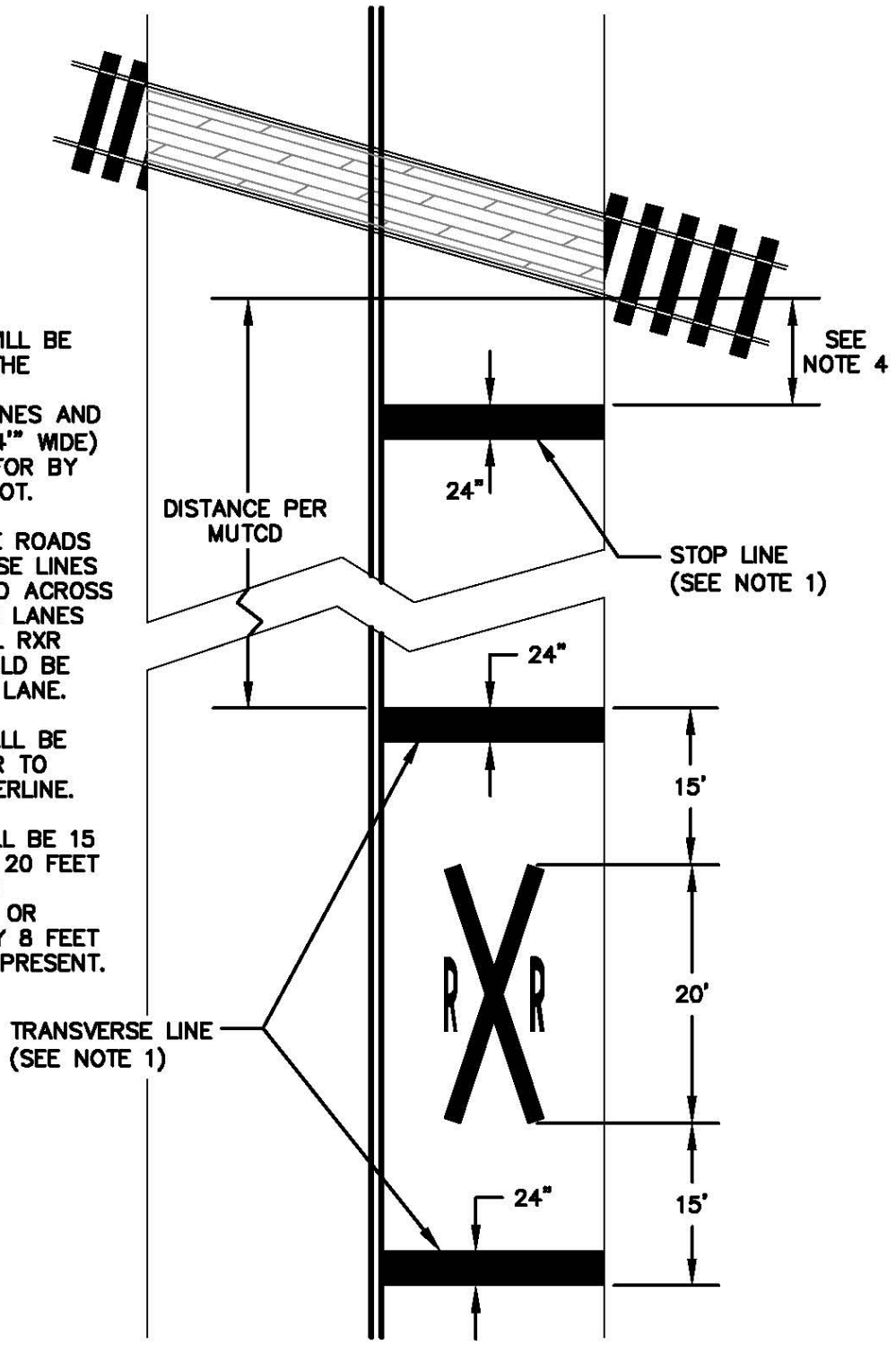

AT GRADE RAILROAD MARKING LAYOUT

S:\DWG\DETAILS\632-6 BIKE AND RAIL

NOT TO SCALE
FIG. 632-7

SUPPLEMENTAL SPECIFICATION

SECTION 900 – Street Sweeping

Description

1.1 This work shall consist providing sweeping with equipment with operator to collect, dust, sand and other debris within the work area.

Equipment

2.1 Units used shall be self-contained vehicle mounted units capable of performing the work on the entire work site under its own power. Either mechanical, regenerative air or vacuum type may be selected and shall be agreed upon by the Contractor and based on the specific need at the work site.

2.2 Units provided shall be of the appropriately sized for the work involved

2.3 Units shall have onboard systems to control dust.

2.4 Contractor shall be responsible for providing any water for the sweeper units.

2.5 Units shall be equipped with caution/safety lighting systems and be used at all times within the work area.

2.6 Contractor shall provide means for sweeping unit empty and dispose accumulated tailings in the hopper. All tailings shall be hauled off the work site and disposed of in a proper manner.

2.7 Each sweeper vehicle shall be kept in mechanically safe condition at all times.

Method of Measurement

4.1 Work performed under this Section will be measured by the number of hours each sweeping unit is at the work site.

4.2 Hours measured shall be from the time each unit arrives on site to the time each unit departs, measured to the nearest half hour.

Basis of Payment

5.1 Street sweeping shall be paid at the hourly unit price bid for the time spent by the unit (with operator) at the work site.

5.2 Contractor shall submit documentation showing when unit(s) arrived and departed the work site.

Pay items and units:

900.1	Street Sweeping	HR

CONTRACT AGREEMENT

THIS AGREEMENT made this ____ th **day of _____, 2016** by and between the City of Manchester, New Hampshire acting through its Department of Public Works, hereinafter called the party of the first part and _____ their successors and assigns, part of the second part, hereinafter called the Contractor. Witnesseth, that the Contractor, for and in consideration of the payment or payments herein specified and agreed to by the party of the first part, hereby covenants and agrees to furnish and deliver all the materials and to do and perform all the work and labor in the construction of the **MICROSURFACING AND FOG SEAL TREATMENTS-FY17,** hereinafter called the project, in the City of Manchester, County of Hillsborough, State of New Hampshire at the unit prices bid by the said Contractor for the respective estimated quantities, aggregating approximately the sum of: **$**_____, and such other items as are mentioned in the original proposal, which proposal and prices named, together with the General Provisions and Technical Specifications and the Special Provisions accompanying the proposal, and made a part of this Contract and accepted as such, are also agreed by each party as being a part hereof, the said project being situated as follows:

- **Application of microsurfacing and fog seal treatments to various City roadways**

The Contractor further covenants and agrees that all of the said materials shall be furnished and delivered and all of said labor shall be done and performed in every respect to the satisfaction and approval of the Department of Public Works aforesaid, within **365 consecutive calendar days** from the date specified in the Notice to Proceed.

The successful Bidder at the time of the execution of the contract, must deposit with the Department of Public Works security in the form of a Performance Bond and a Payment Bond, each in the sum equal to 100 percent of the amount of the contract award. The form of the bonds shall be that provided by the Department and the surety shall be acceptable to the City.

IN WITNESS WHEREOF, the parties of this contract have hereunto set their hands and seals as of the day and year first above written.

CITY OF MANCHESTER
(SEAL)

The Honorable Mayor of the
CITY OF MANCHESTER

By_____
Theodore L. Gatsas

DIRECTOR OF PUBLIC WORKS

By_____
Kevin A Sheppard, P.E.

Signed and sealed in
presence of:

_____ _____
Date

CONTRACTOR
(SEAL)

By: _____

Title: _____

Federal I.D. No. _____

Approved as to form and execution

_____

City Solicitor

NOTARIZATION

Certificate of Acknowledgment of Contractor, if a Corporation

State of New Hampshire,
ss:
County of Hillsborough,

On this _____ **day of _____, 2016**

before me personally came _____

to me known, who being duly sworn did say as follows:

that he resides at: _____

and is the _____ of _____the corporation

described herein and which executed the foregoing instrument; that he knows the corporate seal of said corporation; the seal affixed to the foregoing instrument is such corporate seal and it was so affixed by order of the Board of Directors of said corporation and by the like order, he signed thereto his name and official designation.

_____
Notary Public (seal)

_____

My commission expires:_____

STATEMENT OF UNDERSTANDING

Project Safety

WHEREAS this project is subject to all Safety and Health Regulations as promulgated by the U.S. Department of labor, it shall be a requirement that the Contractor designate a "Safety Officer" who's duty shall be to monitor the project on a daily basis in order to insure that all safety measures alluded to in the contract and otherwise pertinent to this project, are strictly adhered to. Special attention shall be paid to maintaining existing guide, regulatory and warning signs affecting the movement of traffic.

IT IS hereby agreed that responsibility for the above mentioned safety measures is solely that of the Contractor has been designated as the project "Safety Officer".

Date: **_____, 2016**

_____

By:

Title:

STATEMENT OF COMPLIANCE
Drug Testing Program

WHEREAS this project is subject to federal laws, rules and regulations, and WHEREAS all drivers of commercial vehicles over 26,000 pounds GVWR are required to have a Commercial Drivers License (CDL), it is hereby certified that the Alcohol and Drug Testing requirements for Commercial Motor Vehicle Drivers mandated by the Federal Highway Administration, United States Department of Transportation are being complied with.

Date: **_____, 2016**

_____

By:

Title:

PERFORMANCE BOND

KNOW ALL MEN BY THESE PRESENTS: That we _____

_____ a _____ hereinafter

called the "Principal" and _____ of _____, State

of _____ hereinafter called the "Surety", are held and firmly bound

unto THE CITY OF MANCHESTER, NEW HAMPSHIRE, hereinafter called "Owner",

in the penal sum of **(_____)** in lawful money of the United States, for the payment of which sum well and truly to be made, we bind ourselves, our heirs, executors, administrators and successors, jointly and severally, firmly by these presents.

THE CONDITIONS OF THIS OBLIGATION is such that WHEREAS, the Principal enter into a certain contract with the Owner, dated the (Date) copy of which is hereto attached and made a part of hereof for the construction of:

"MICROSURFACING AND FOG SEAL TREATMENTS-FY17" in accordance with drawings and specifications prepared by the City of Manchester, N.H. which contract is by reference made a part hereof, and is hereinafter referred to as the Contract.

NOW, THEREFORE, if the Principal shall well, truly and faithfully perform its duties, all the undertakings, covenants, terms, conditions and agreements of said contract during the original term thereof, and any extensions thereof which may be granted by the Owner, with or without notice to the Surety, and if he shall satisfy all claims and demands incurred under such contract, and shall fully indemnify and save harmless the Owner from all costs and damages which it may suffer by reason of failure to do so, and shall fully reimburse and repay the Owner for all outlay and expense which Owner may incur in making good any default, then this obligation shall be void; otherwise to remain in full force and effect.

PROVIDED FURTHER, that the said Surety, for value received, hereby stipulates and agrees that no change, extension of time, alteration or addition to the terms of the contract or to the work to be performed thereunder, or the specifications accompanying the same, shall in any way affect its obligation on this bond, and it does hereby waive notice of any such change, extension of time, alteration or addition to the terms of the contract or to do the work or to the specifications.

PROVIDED FURTHER, that no final settlement between the Owner and the Contractor shall abridge the right of any beneficiary hereunder, whose claim may be unsatisfied.

IN WITNESS WHEREOF, this instrument is executed in six (6) counterparts, each one of which shall be deemed and original, this the ____ day of _____ 2004.

ATTEST: _____
Principal

_____(S)
(Principal)

_____

(Seal) By_____(S)

_____

_____(S)
Witness as to Principal

_____

_____
Address

ATTEST: _____
Surety

_____(S)
(SURETY) By_____(s)
_____ Attorney-in-Fact

(SEAL)
_____(S)
Witness to Surety

_____
_____ (Address)

_____
Address

Note: Date of Bond must not be prior to date of Contract.

PAYMENT BOND

KNOW ALL MEN BY THESE PRESENTS: That _____

_____ as Principal, hereinafter called Principal, and _____ as surety, hereinafter called Surety, are held and firmly bound unto THE CITY OF MANCHESTER, NEW HAMPSHIRE, as obligee, hereinafter called Owner, for the use and benefit of claimants as herein below defined, in the amount of **(_____)** for the payment where of Principal and Surety bind themselves, their heirs, executors, administrators, successors and assigns, jointly and severally, firmly by these presents.

WHEREAS, Principal has by written agreement, dated _____, **2016** entered into a contract with Owner for the construction of

"MICROSURFACING AND FOG SEAL TREATMENTS-FY17" in accordance with drawings and specifications prepared by the City of Manchester, N.H. which contract is by reference made a part hereof, and is hereinafter referred to as the Contract.

NOW, THEREFORE, if the Principal shall promptly make payment to all persons, firms, subcontractors, and corporations furnishing materials for or performing labor in the prosecution of the work, provided for in such contract, and any authorized extension or modification thereof, including all amounts due for materials, lubricants, oil, gasoline, coal and coke, repairs on machinery, equipment and tools consumed or used in connection with the construction of such work, and all insurance premiums on said work, and for all labor, performed in such work, whether by subcontractor or otherwise, then this obligation shall be void; otherwise to remain in full force and effect.

PROVIDED FURTHER, that the said Surety, for value received, hereby stipulates and agrees that no change, extension of time, alteration or addition to the terms of the contract or to the work to be performed thereunder, or the specifications accompanying the same shall in any way affect its obligation on this bond, and it does hereby waive notice of any such change, extension of time, alteration or addition to the terms of the contract or to do the work or the specifications.

PROVIDED FURTHER, that no final settlement between the Owner and the Contractor shall abridge the right of any beneficiary hereunder, whose claim may be unsatisfied.

IN WITNESS WHEREOF, this instrument is executed in six (6) counterparts, each one of which shall be deemed and original, this **____ day of _____, 2016**.

ATTEST:_____Principal

_____(Principal)

(Seal) By_____(S)

_____

By:_____Witness as to Principal(s)

_____

_____Address

_____Surety

ATTEST: By_____Attorney-in-Fact(s)

_____(Surety)

(Seal)

By:_____(S)
Witness as to Surety

_____

Note: Date of Bond must not be prior to date of Contract.