NON-RESIDENTIAL SITE PLAN

CHANDLER HOUSE

TAX MAP 18 LOT 23-1

147 WALNUT STREET

MANCHESTER, NEW HAMPSHIRE

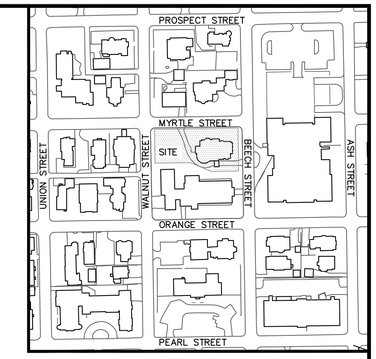

LOCUS PLAN
SCALE: 1"=200'

OWNER AGREEMENT

IT IS HEREBY AGREED THAT, AS THE OWNER/DEVELOPER OF THE PROPERTY, I WILL CONSTRUCT THE PROJECT AS APPROVED AND AS SHOWN ON THE ENCLOSED PLANS. FURTHER, I AGREE TO MAINTAIN THE SITE IMPROVEMENTS FOR THE DURATION OF THE USE.

Alan Chong, Director/Currier Museum of Art
NAME (PRINT)

SIGNATURE

Sept. 29, 2020
DATE

DIG SAFE
811
CALL TOLL FREE
DAMAGE PREVENTION SYSTEM
UTILITIES UNDERGROUND

AERIAL MAP
SCALE: 1"=250'

GRANITE ENGINEERING
civil engineering • land planning • municipal services
250 Commercial Street, Suite 3008
Manchester,
New Hampshire 03101
603.518.8030
www.GraniteEng.com

STATE OF NEW HAMPSHIRE
JEFFREY J. MERRITT
No. 11778
LICENSED
PROFESSIONAL ENGINEER
10.05.20

OWNER:
ROMAN CATHOLIC BISHOP OF MANCHESTER
153 ASH STREET
MANCHESTER, NH 03104
(603) 669-3100

APPLICANT:
CURRIER MUSEUM OF ART
150 ASH STREET
MANCHESTER, NH 03104
(603) 669-6144

CIVIL ENGINEER:
GRANITE ENGINEERING, LLC
250 COMMERCIAL STREET, STE 3008
MANCHESTER, NH 03101
(603) 518-8030

SURVEYOR:
JOSEPH M. WICHERT LLS, INC.
802 AMHERST STREET
MANCHESTER, NH 03104
(603) 647-4282

LANDSCAPE ARCHITECT:
TERRAIN PLANNING & DESIGN LLC
311 KAST HILL ROAD
HOPKINTON, NH 03229
(603) 486-8685

ARCHITECT:
MATUSZEWSKI & ASSOCIATES, ARCHITECTS
29 BOURBON STREET
BEDFORD, NH 03110
(603) 785-7519

WETLAND SCIENTIST:
ECOSYSTEMS LAND PLANNING
36 DUNKLEE STREET
CONCORD, NH 03301
(603) 224-6244

SHEET NO.	INDEX OF PLANS
1	EXISTING CONDITIONS PLAN (SUBDIVISION PLAN)
2	REMOVALS/DEMOLITION PLAN
3	SITE PLAN
4	GRADING, DRAINAGE, UTILITY & EROSION CONTROL PLAN
5	LIGHTING PLAN
6	LANDSCAPE PLAN
7–9	DETAILS

REVISIONS

No.	DATE	COMMENTS	BY

PLAN REFERENCES:

1.) "AMOSKEAG INDUSTRIES PLAN SHEET 27" ON FILE AT THE MANCHESTER DEPARTMENT OF PUBLIC WORKS

BUILDABLE AREA TABLE					
LOT #	LOT AREA	AREA > 25%	WETLAND AREA	EASEMENT AREA	BUILDABLE AREA
23	26,453 SF	0 SF	0 SF	1,446 SF	25,007 SF
23-1	22,107 SF	0 SF	0 SF	578 SF	21,529 SF

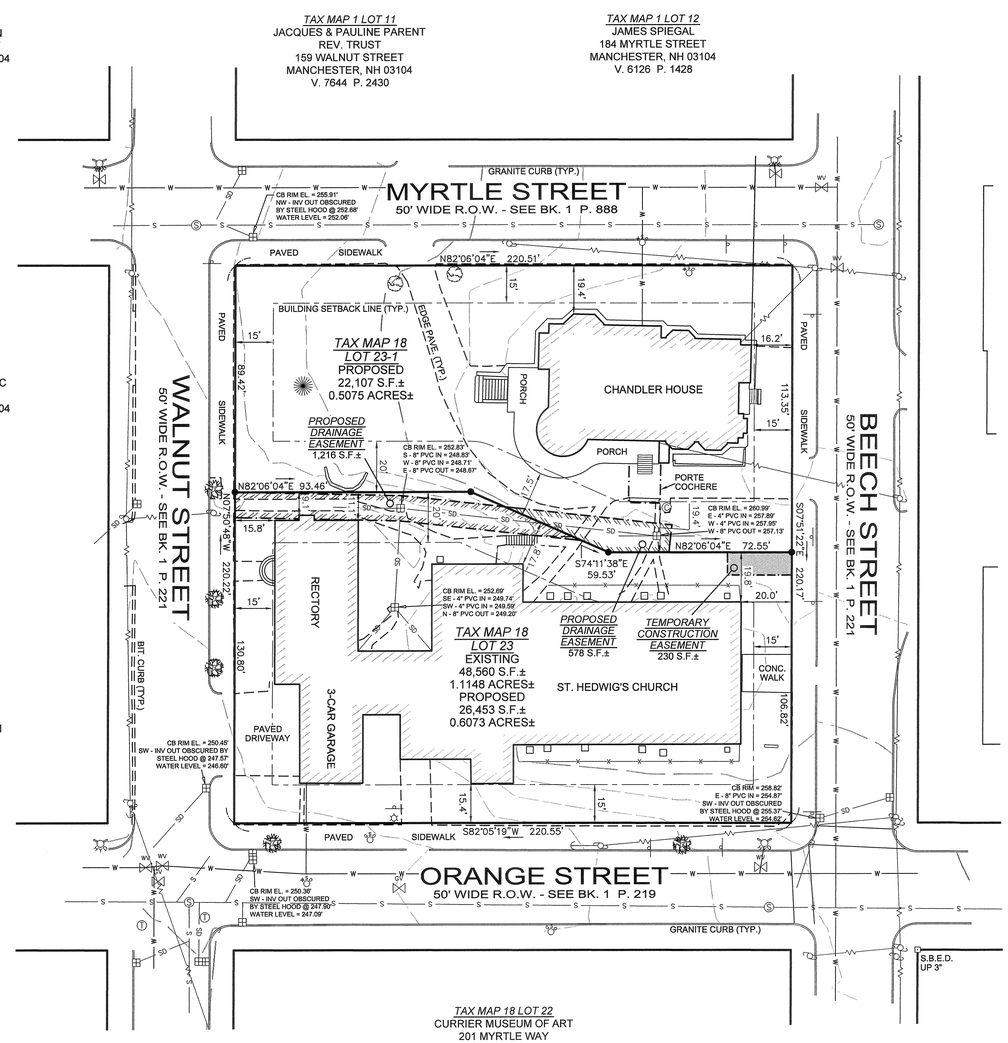

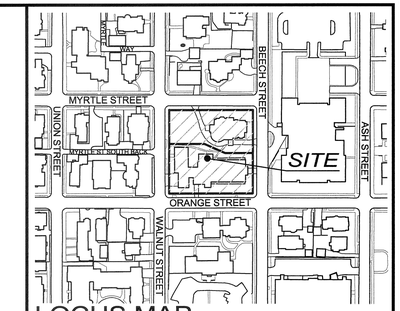

LOCUS MAP SCALE : 1"=200'±

NOTES:

1.) THE SUBJECT PARCEL IS LOT 23 ON THE CITY OF MANCHESTER TAX MAP 18. THE OWNER OF RECORD IS THE ROMAN CATHOLIC BISHOP OF MA NCHESTER, A CORPORATION SOLE OF 153 ASH STREET, MANCHESTER, NEW HAMPSHIRE 03104. THE APPLICANT IS THE CURRIER MUSEUM OF ART OF 150 ASH STREET, MANCHESTER, NEW HAMPSHIRE 03104. SEE HCRD V. 736 P. 456.

2.) THE SUBJECT PARCEL IS ZONED C-1. MINIMUM LOT SIZE IS 10,000 SQ. FT. MINIMUM LOT FRONTAGE = 100'. SETBACKS ARE AS FOLLOWS: FRONT = 15', SIDE = 20' AND REAR = 20'. THE SETBACKS SHOWN ARE FOR REFERENCE ONLY AND NEED TO BE VERIFIED WITH THE ZONING COMPLIANCE OFFICER.

3.) THIS PLAN IS THE RESULT OF AN ACTUAL FIELD SURVEY PERFORMED BY THIS OFFICE IN SEPTEMBER OF 2020. I, JOSEPH M. WICHERT, NHLLS #783, CERTIFY THAT THE WORK WAS PREPARED BY ME OR THOSE UNDER MY DIRECT SUPERVISION.

4.) THE INTENT OF THIS PLAN IS TO SHOW THE PROPOSED SUBDIVISION OF THE SUBJECT PARCEL INTO TWO LOTS. A NEW LOT WITH THE CHANDLER HOUSE AND A RECONFIGURED REMAINDER PARCEL WITH ST. HEDWIG'S CHURCH.

5.) THE SUBJECT PARCEL IS IN ZONE X (AREAS DETERMINED TO BE OUTSIDE THE 0.2% ANNUAL CHANCE FLOODPLAIN) AS SHOWN ON THE FLOOD INSURANCE RATE MAP, HILLSBOROUGH COUNTY, NEW HAMPSHIRE, MAP NUMBER 33011C0377D, EFFECTIVE DATE SEPTEMBER 25, 2009.

6.) THE VERTICAL DATUM IS NAVD 1988 AND THE HORIZONTAL DATUM IS NHSPC 1983/1992 (CITY DATUM). THE DATUM WERE ESTABLISHED USING STATIC GPS OBSERVATIONS PERFORMED BY THIS OFFICE IN SEPTEMBER OF 2020.

7.) THE UTILITY INFORMATION SHOWN IS BASED ON THE ABOVE GROUND LOCATION OF VISIBLE UTILITIES AND PLANS ON FILE AT THE MANCHESTER HIGHWAY DEPARTMENT AND VARIOUS UTILITIES, THE CONTRACTOR NEEDS TO FIELD VERIFY ALL UTILITIES PRIOR TO ANY CONSTRUCTION. THIS OFFICE DOES NOT GUARANTEE THE LOCATION AND ACCURACY OF THE UTILITY DATA. DIG SAFE SHALL BE CONTACTED 72 HOURS PRIOR TO COMMENCING ANY CONSTRUCTION (811).

8.) THE APPLICANT HAS APPLIED FOR THE FOLLOWING VARIANCES FROM THE MANCHESTER ZONING BOARD OF ADJUSTMENT: LOT 18-23 = SECTION 6.03 SIDEYARD SETBACK OF 9.1' WHERE 20' IS REQUIRED; SECTION 6.06 FLOOR AREA RATIO OF 0.52 PROPOSED WHERE 0.5 IS REQUIRED. LOT 18-23-1 = SECTION 6.02 FRONTAGE OF 89.42' PROPOSED WHERE 100' IS REQUIRED; SECTION 6.03 (2 COUNTS) SIDEYARD SETBACKS OF 5.8' AND 17.5' PROPOSED WHERE 20' IS REQUIRED; SECTION 6.06 FLOOR AREA RATIO OF 0.62 PROPOSED WHERE 0.5 IS REQUIRED.

SYMBOL LEGEND

- REBAR W/ID CAP TO BE SET
- IRON ROD FOUND
- BOUND FOUND
- FENCE POST
- SEWER MANHOLE
- UTILITY POLE
- LIGHT POLE
- WATER SHUT OFF
- WATER GATE VALVE
- CATCH BASIN
- GAS VALVE
- SIGN
- CLEANOUT
- HYDRANT
- TEL MANHOLE
- GUY WIRE
- OVERHEAD UTILITY LINE
- PICKET FENCE
- SEWER LINE
- WATER LINE
- GAS LINE
- STORM DRAIN LINE
- OVERHEAD UTILITY LINE

GRAPHIC SCALE

30 0 15 30 60 120

(IN FEET)
1 inch = 30 ft.

I CERTIFY THAT THIS PLAN IS THE RESULT OF AN ACTUAL FIELD SURVEY MADE WITH A TOPCON GT 503. THE ERROR OF CLOSURE ON ALL LOT LINES WITHIN AND BORDERING THE SUBJECT PROPERTY IS BETTER THAN 1 IN 10,000.

1 OCT. 2020

JOSEPH M. WICHERT, LLS DATE

STATE OF NEW HAMPSHIRE LICENSED LAND SURVEYOR No. 783 JOSEPH M. WICHERT SIGNATURE

WETLANDS CERTIFICATION:

A DETERMINATION THAT NO WETLANDS EXIST ON THIS PARCEL WAS MADE ON SEPT 15, 2020, BY JOHN ST. JOHN, CWS #221. THIS DETERMINATION WAS MADE DUE TO A LACK OF HYDROPHYTIC VEGETATION, HYDRIC SOILS, AND WETLAND HYDROLOGY, IN ACCORDANCE WITH THE TECHNIQUES OUTLINED IN THE CORPS OF ENGINEERS WETLANDS DELINEATION MANUAL, TECHNICAL REPORT Y-87-1, JANUARY 1987, USING THE CURRENT SOIL INDICATORS AND PLANTS LIST.

STATE OF NEW HAMPSHIRE JOHN J. ST. JOHN No. 221 CERTIFIED WETLAND SCIENTIST

COPYRIGHT 2020 JOSEPH M. WICHERT, L.L.S., INC.

NO.	DATE	DESCRIPTION	BY
1	10/1/20	REV. FOR PB SUBMISSION	JMW

TOPOGRAPHIC
SUBDIVISION PLAN FOR
ROMAN CATHOLIC BISHOP OF MANCHESTER, A CORPORATION SOLE
TAX MAP 18 LOT 23
147 WALNUT STREET
MANCHESTER, NEW HAMPSHIRE

DATE: 7 SEPTEMBER 2020 SCALE: 1" = 30'

SUBDIVISION PLAN BY:

802 AMHERST STREET
MANCHESTER, NH 03104
TEL: (603) 647-4282 OR 736-8203
FAX: (603) 623-1910
WEB: WWW.JMWLLS.COM

Joseph M. Wichert LLS, INC.

LAND SURVEYOR & SEPTIC SYSTEM DESIGNER

SHEET S1 SHEET 1 OF 1 F.B. P. JOB #2020162

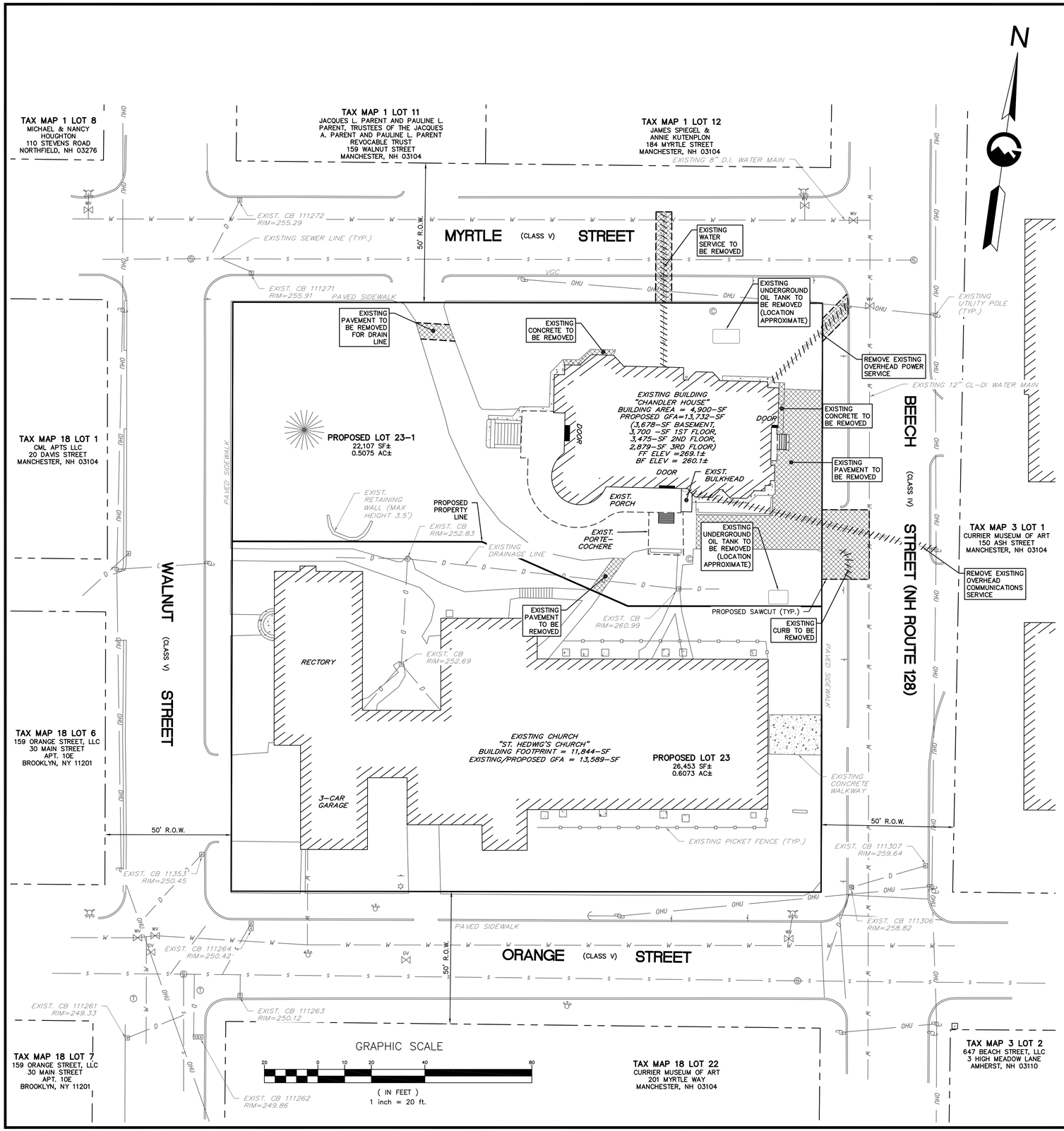

GENERAL NOTES:

1. THE PURPOSE OF THIS PLAN IS TO SHOW EXISTING FEATURES ON SITE TO BE REMOVED, SALVAGED, OR REPLACED.
2. ITEMS TO BE REMOVED AND DISPOSED OF IN ACCORDANCE WITH ALL LOCAL, STATE, AND FEDERAL REGULATIONS.
3. ALL EXISTING PAVEMENT AND GRAVEL WITHIN THE CROSS HATCHED AREA IS TO BE REMOVED DURING THE DEMOLITION PHASE OF THE PROJECT. EXCESS MATERIAL FROM THESE AREAS SHALL BE APPROPRIATELY DISPOSED OF OFFSITE.
4. THE CONTRACTOR SHALL CONTROL ALL DUST GENERATED DURING THE REMOVAL PHASE AND CONSTRUCTION PHASE SO THAT NO DUST LEAVES THE SITE.
5. ANY MONUMENTS DISTURBED DURING CONSTRUCTION, WHICH AREN'T CALLED OUT FOR REMOVAL, SHALL BE RESET BY A NEW HAMPSHIRE LICENSED LAND SURVEYOR AT THE SITE CONTRACTORS EXPENSE.
6. THE LOCATION OF ANY UTILITY INFORMATION SHOWN ON THIS PLAN IS APPROXIMATE. GRANITE ENGINEERING, LLC. MAKES NO CLAIM TO THE ACCURACY OR COMPLETENESS OF UTILITIES SHOWN. PRIOR TO ANY EXCAVATION ON SITE, THE CONTRACTOR SHALL CONTACT DIG SAFE AT 811.
7. TEMPORARY EROSION CONTROL MEASURES, INCLUDING SILT FENCE WHERE SHOWN, SHALL BE IN PLACE PRIOR TO THE START OF CONSTRUCTION (SEE EROSION CONTROL PLAN).

LEGEND

- GAS VALVE
- FIRE HYDRANT
- UTILITY POLE
- SIGN
- WATER VALVE
- GAS SHUT OFF
- WATER SHUT OFF
- SEWER MANHOLE
- TELEPHONE MANHOLE
- CAP
- CATCH BASIN
- LIGHT FIXTURE
- EX. FENCE
- EXIST. VERTICAL GRANITE CURB
- EX. EDGE OF PAVEMENT
- EX. BUILDING
- ABUTTER LINE
- PROPERTY LINE
- EX. CONCRETE
- PAVEMENT/CONCRETE TO BE REMOVED

RESERVED FOR APPROVAL STAMP AND SIGNATURE

GRANITE ENGINEERING
civil engineering
land planning
municipal services

REVISIONS

No.	DATE	COMMENTS	BY

OWNER:
ROMAN CATHOLIC BISHOP OF MANCHESTER
153 ASH STREET
MANCHESTER, NH 03104

APPLICANT:
CURRIER MUSEUM OF ART
150 ASH STREET
MANCHESTER, NH 03104

GRANITE ENGINEERING
civil engineering • land planning • municipal services
250 Commercial Street, Suite 3008
Manchester,
New Hampshire 03101
603.518.8030
www.GraniteEng.com

STAMP:
STEVEN D. PAPPAS
NEW HAMPSHIRE
JEFFREY A. MERRITT
No. 11778
LICENSED
PROFESSIONAL ENGINEER
10.05.20

LOCATION:
TAX MAP 18 LOT 23-1
147 WALNUT STREET
MANCHESTER, NEW HAMPSHIRE
HILLSBOROUGH COUNTY

PROJECT:
CHANDLER HOUSE

TITLE:
REMOVALS/DEMOLITION PLAN

PROJECT No.	DATE:	SCALE:
20-0731-1	OCTOBER 5, 2020	HORIZ. 1"=20'
SHEET: 2 OF 9		

P:\O\2007311\Eng\Production Plans\2007311 - SITE.dwg, REMOVALS, 9/30/2020 4:24:41 PM, pmerritt, Bluebeam PDF, AHFLD_(22.00_x_34.00_Inches), 1:1

PLAN REFERENCES:

1. "AMOSKEAG INDUSTRIES PLAN SHEET 27" ON FILE AT THE MANCHESTER DEPARTMENT OF PUBLIC WORKS.
2. "TOPOGRAPHIC SUBDIVISION PLAN FOR ROMAN CATHOLIC BISHOP OF MANCHESTER, A CORPORATION SOLE, TAX MAP 18 LOT 23, 147 WALNUT STREET, MANCHESTER, NH" DATED 7 SEPTEMBER 2020 AND PREPARED BY JOSEPH M. WICHERT LLS. INC.

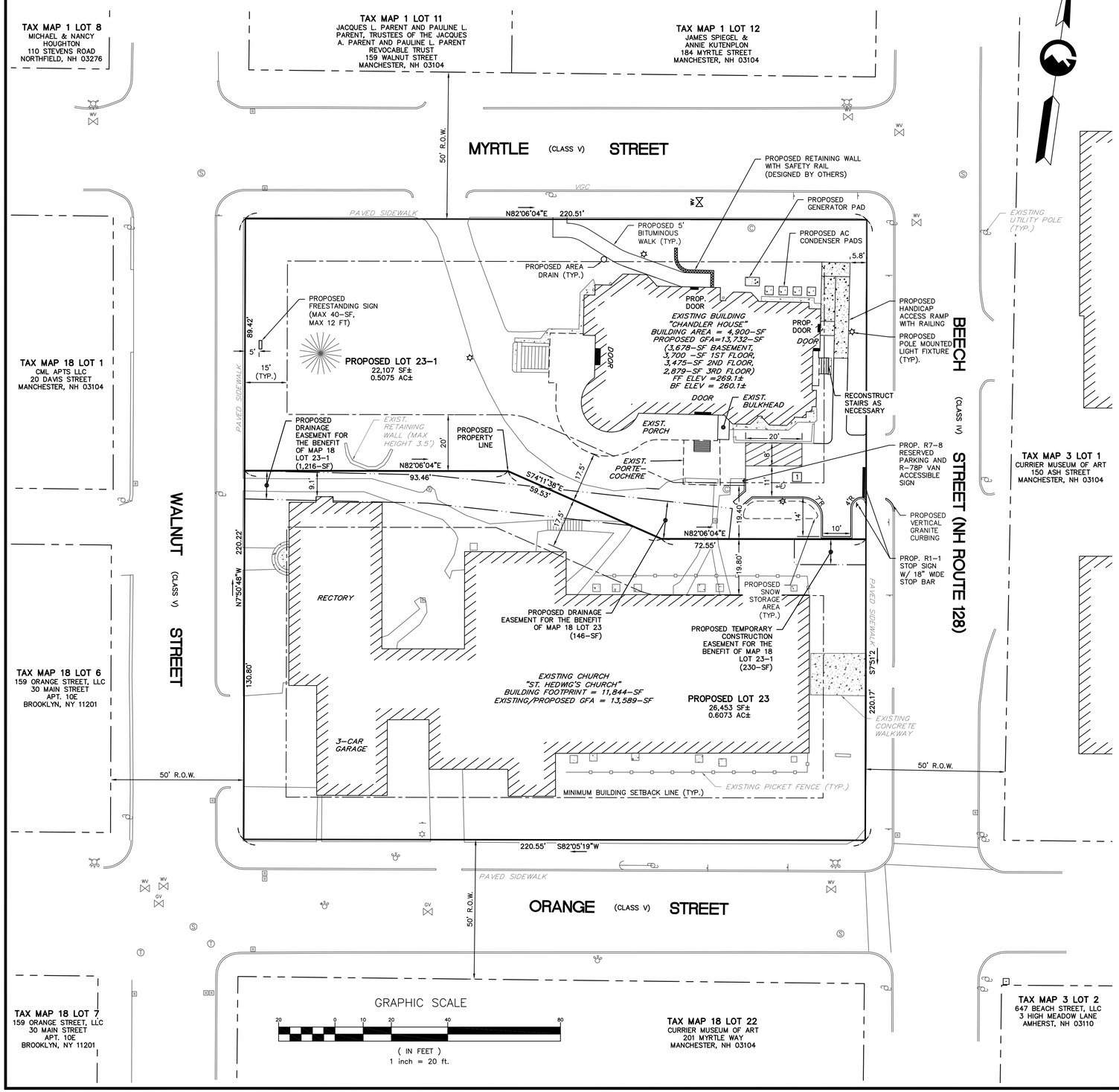

GENERAL NOTES:

1. THE PURPOSE OF THIS PLAN IS TO SUBDIVIDE MAP 18 LOT 23 INTO TWO SEPARATE LOTS OF RECORD, CHANGE THE USE OF THE CHANDLER HOUSE TO MUSEUM WITH ACCESSORY OFFICE AND CLASSROOM FOR USE BY THE CURRIER MUSEUM OF ART, AND TO ILLUSTRATE PROPOSED SITE IMPROVEMENTS TO BOTH LOTS.
2. OWNER OF RECORD:
   ROMAN CATHOLIC BISHOP OF MANCHESTER
   153 ASH STREET
   MANCHESTER, NH 03104
3. THE ERROR OF CLOSURE FOR THE BOUNDARY IS GREATER THAN 1:10,000 PERFORMED BY JOSEPH M. WICHERT LLS, INC. IN SEPTEMBER OF 2020.
4. THE SUBJECT PROPERTY IS NOT LOCATED IN THE 100-YR FLOOD PLAIN AS PER THE FLOOD INSURANCE RATE MAP, HILLSBOROUGH COUNTY COMMUNITY PANEL 33011C0377D HAVING AN EFFECTIVE DATE OF SEPTEMBER 25, 2009.
5. THE SUBJECT PROPERTY IS LOCATED ENTIRELY WITHIN THE CIVIC-INSTITUTIONAL (C-1) ZONING DISTRICT AND IS SUBJECT TO THE FOLLOWING DIMENSIONAL REGULATIONS:

TABLE OF ZONING REQUIREMENTS

DESCRIPTION	REQUIRED	EXISTING	PROPOSED LOT 23	PROPOSED LOT 23-1
MINIMUM LOT SIZE	10,000 SF	48,560 SF	26,453 SF	22,107 SF
MINIMUM BUILDABLE AREA	10,000 SF	48,560 SF	25,007 SF	21,529 SF
MINIMUM LOT FRONTAGE	100 FT	880 FT	458.17 FT	423.28 FT
FRONT YARD SETBACK	15 FT	9.13 FT	15.4 FT	5.8 FT
SIDE YARD SETBACK	20 FT	N/A	9.1 FT	17.5 FT
REAR YARD SETBACK	20 FT	N/A	N/A	N/A
MAXIMUM LOT COVERAGE	75%	52.19%	56%	42%
BUILDING AREA (FOOTPRINT)	N/A	16,744 SF	11,844 SF	4,900 SF
MAXIMUM STORIES	2.5	3	2	3
BUILDING HEIGHT	35 FT	46 FT	<35 FT	46 FT
MAXIMUM FLOOR AREA RATIO	0.5	0.49	0.52	0.62
USE	N/A	CHURCH	CHURCH	MUSEUM

6. SUBJECT PARCELS ARE SERVICED BY MANCHESTER WATERWORKS AND CITY OF MANCHESTER MUNICIPAL SEWER.
7. THE VERTICAL DATUM IS NAVD 1988 AND THE HORIZONTAL DATUM IS NHSPC 1983/1992 (CITY DATUM). THE DATUMS WERE ESTABLISHED USING STATIC GPS OBSERVATIONS PERFORMED BY JOSEPH M. WICHERT LLS, INC. IN SEPTEMBER OF 2020.
8. A DETERMINATION THAT NO WETLANDS EXIST ON THIS PARCEL WAS MADE ON SEPT 15, 2020, BY JOHN ST. JOHN, CWS #221. THIS DETERMINATION WAS MADE DUE TO A LACK OF HYDROPHYTIC VEGETATION, HYDRIC SOILS, AND WETLAND HYDROLOGY, IN ACCORDANCE WITH THE TECHNIQUES OUTLINED IN THE CORPS OF ENGINEERS WETLANDS DELINEATION MANUAL, TECHNICAL REPORT Y-87-1, JANUARY 1987, USING THE CURRENT SOIL INDICATORS AND PLANTS LIST.
9. PARKING CALCULATIONS:
   PROPOSED LOT 23 (CHURCH)
   EXISTING PARKING = 3 SPACES (WITHIN ONSITE GARAGE)
   REQUIRED PARKING = 1 SPACE/4 SEATS * 500 SEATS = 125 SPACES
   REQUIRED LOADING SPACE = 0 SPACES
   PROPOSED PARKING = 3 SPACES (WITHIN ONSITE GARAGE)
   PROPOSED LOADING SPACE = 0 SPACES

   PROPOSED LOT 23-1 (MUSEUM)
   EXISTING PARKING = 0 SPACES
   REQUIRED PARKING = 1 SPACE/300 SF *13732-SF = 46 SPACES
   REQUIRED LOADING SPACE = 0 SPACES
   PROPOSED PARKING = *1 SPACES (INCLUDES 1 HC SPACE)
   PROPOSED LOADING SPACE = 0 SPACES
   * APPLICANT REQUESTS A CUP FOR REDUCTION IN THE ONSITE PARKING
10. LOCATION OF ANY UTILITY INFORMATION SHOWN ON THIS PLAN IS APPROXIMATE. GRANITE ENGINEERING, LLC MAKES NO CLAIM TO THE ACCURACY OR COMPLETENESS OF UTILITIES SHOWN. PRIOR TO ANY EXCAVATION ON SITE THE CONTRACTOR SHALL CONTACT DIG SAFE AT 811.
11. IN ACCORDANCE WITH THE SUBDIVISION AND SITE PLAN REGULATIONS OF THE CITY OF MANCHESTER AND RSA § 676:13, ALL IMPROVEMENTS SPECIFIED ON THESE SITE PLANS SHALL BE CONSTRUCTED, COMPLETED, INSPECTED, AND APPROVED BY THE CITY PRIOR TO THE ISSUANCE OF A CERTIFICATE OF OCCUPANCY. ANY VIOLATION OF THE CONDITIONS OF APPROVAL STATED ON THIS PLAN MAY RESULT IN FINES AND A REVOCATION OF APPROVAL, PURSUANT TO SUBSECTION 1.7(B) OF THESE REGULATIONS.
12. ALL CONDITIONS SUBSEQUENT TO APPROVAL SHALL BE COMPLETED WITHIN TWO YEARS OF THE DATE OF FINAL APPROVAL.
13. NO CERTIFICATE OF OCCUPANCY SHALL BE AUTHORIZED UNTIL ALL REQUIRED IMPROVEMENTS HAVE BEEN COMPLETED, UNLESS ADDRESSED BY THE PROVISION OF A FINANCIAL GUARANTEE, PURSUANT TO THE REQUIREMENTS OF SECTION 4.14 OF THE MANCHESTER SUBDIVISION AND SITE PLAN REVIEW REGULATIONS.
14. APPROVAL SHALL BE VALID FOR A PERIOD OF ONE YEAR FROM THE DATE OF ACTION BY THE PLANNING BOARD, WITHIN WHICH TIME PERIOD A BUILDING PERMIT MUST BE SECURED, OTHERWISE THIS APPROVAL SHALL LAPSE.
15. IF DURING CONSTRUCTION, IT BECOMES APPARENT THAT ADDITIONAL EROSION CONTROL MEASURES ARE REQUIRED TO STOP ANY EROSION ON THE CONSTRUCTION SITE, THE PROPERTY OWNER SHALL BE REQUIRED TO INSTALL THE NECESSARY EROSION PROTECTION AT NO EXPENSE TO THE CITY.
16. SITE LIGHTING SHALL BE SHOWN ON THE PLAN, DIRECTED ONTO SITE, AND SHALL CONFORM WITH ALL APPLICABLE CITY OF MANCHESTER REGULATIONS.
17. PLOWED SNOW FROM THE FACILITIES, DRIVEWAY, PARKING LOTS, AND SIDEWALK SHALL BE STORED IN THE DESIGNATED AREAS AND DISPOSED OF IN AN ENVIRONMENTALLY SOUND FASHION AND IN ACCORDANCE WITH ALL LOCAL, STATE, AND FEDERAL REGULATIONS.
18. SHOULD ANY CONDITION PRECEDENT OR SUBSEQUENT TO THE PLANNING BOARD APPROVAL NOT BE MET IN THE TIME PERIODS PROVIDED FOR IN SUBSECTION 4.13 OF THE MANCHESTER SUBDIVISION AND SITE PLAN REVIEW REGULATIONS, THE PLANNING BOARD SHALL HOLD A HEARING TO REVOKE THE APPROVAL, PURSUANT TO RSA 676:4-a.
19. ALL MATERIAL CHANGES TO THE APPROVED PLAN, INCLUDING CHANGES TO SIGNAGE, SHALL BE REVIEWED AND APPROVED BY THE PLANNING BOARD AT A PUBLIC HEARING.
20. AN EXCAVATION PERMIT FROM THE MANCHESTER DEPARTMENT OF PUBLIC WORKS IS REQUIRED FOR ALL WORK WITHIN THE PUBLIC RIGHT-OF-WAY. ALL WORK SHALL CONFORM TO THE CITY OF MANCHESTER STANDARD SPECIFICATIONS.
21. THIS PROJECT DISTURBS LESS THAN 1-ACRE OF LAND, THEREFORE, THIS PROJECT WILL NOT BE REQUIRED TO OBTAIN A NATIONAL POLLUTANT DISCHARGE ELIMINATION SYSTEM (NPDES) PERMIT COVERAGE AS ISSUED BY THE ENVIRONMENTAL PROTECTION AGENCY (EPA).
22. NO STATE LAND USE PERMITS ARE REQUIRED FOR THIS PROJECT.
23. TRASH FOR THE USE WILL BE COLLECTED IN TOTES ONSITE AND WHEELED ACROSS BEECH STREET TO THE CURRIER MUSEUM TRASH/RECYCLING CENTER ON THE EAST SIDE OF BEECH STREET.
24. THE FOLLOWING VARIANCES ARE REQUESTED FOR THIS PROJECT:
    A. ARTICLE 6, SECTION 6.03C – SIDEYARD SETBACK (BOTH LOTS)
    B. ARTICLE 6, SECTION 6.03A – FRONTYARD SETBACK (LOT 23-1)
    C. ARTICLE 6, SECTION 6.02 – MINIMUM LOT FRONTAGE (LOT 23-1)
    D. ARTICLE 10, SECTION 10.09A – PAVEMENT WITHIN 4 FEET OF PROPERTY LINE
    E. ARTICLE 10, SECTION 10.07G – 10' LANDSCAPED PERIMETER
25. THE TRAFFIC IMPACT ASSOCIATED WITH THIS USE IS MINIMAL AND THEREFORE IS EXPECTED TO HAVE A NEGLIGIBLE IMPACT ON THE EXISTING TRAFFIC SYSTEM.

LEGEND

- GAS VALVE
- FIRE HYDRANT
- UTILITY POLE
- SIGN
- WATER VALVE
- GAS SHUT OFF
- WATER SHUT OFF
- SEWER MANHOLE
- TELEPHONE MANHOLE
- CAP
- CATCH BASIN
- LIGHT FIXTURE
- EX. FENCE
- EXIST. VERTICAL GRANITE CURB
- EX. EDGE OF PAVEMENT
- PROP. VERTICAL GRANITE CURB
- PROP. EDGE OF PAVEMENT
- PROP. EDGE OF WALKWAY
- PROP. EASEMENT LINE
- DRAINAGE LINE
- PROP. SNOW STORAGE
- EX. BUILDING
- ABUTTER LINE
- PROPERTY LINE
- PROPOSED PROPERTY LINE
- EX. CONCRETE
- PROP. CONCRETE
- PROP. RETAINING WALL

RESERVED FOR APPROVAL STAMP AND SIGNATURE

GRANITE ENGINEERING
civil engineering
land planning
municipal services

REVISIONS

No.	DATE	COMMENTS	BY

OWNER:
ROMAN CATHOLIC BISHOP OF MANCHESTER
153 ASH STREET
MANCHESTER, NH 03104

APPLICANT:
CURRIER MUSEUM OF ART
150 ASH STREET
MANCHESTER, NH 03104

GRANITE ENGINEERING
civil engineering • land planning • municipal services
250 Commercial Street, Suite 3008
Manchester, New Hampshire 03101
603.518.8030
www.GraniteEng.com

STAMP:
STATE OF NEW HAMPSHIRE
JEFFREY D. MERRITT
No. 11778
LICENSED
PROFESSIONAL ENGINEER
10.05.20

LOCATION:
TAX MAP 18 LOT 23-1
147 WALNUT STREET
MANCHESTER, NEW HAMPSHIRE
HILLSBOROUGH COUNTY

PROJECT:
CHANDLER HOUSE

TITLE:
SITE PLAN

PROJECT No.	DATE:	SCALE:
20-0731-1	OCTOBER 5, 2020	HORIZ. 1"=20'
SHEET: 3 OF 9		

P:\2020731\dwg\Production Plans\2020731 - SITE.dwg, SITE, 9/30/2020 4:25:13 PM, pwcutt, Bluebeam PDF, AHFL_D_(22.00_x_34.00_Inches), 1:1

WATER CONSTRUCTION NOTES:

1. ALL DISTRIBUTION MATERIALS, INCLUDING MAINS, FITTINGS AND VALVES, TO MEET MANCHESTER WATER WORKS (MWW) REGULATIONS AND SPECIFICATIONS.
2. ALL INSTALLATION AND TESTING OF MATERIALS TO CONFORM TO AWWA STANDARDS FOR POTABLE WATER SYSTEMS.
3. CONTRACTOR TO SUBMIT PLUMBING PLANS TO MANCHESTER WATER WORKS FOR METER SIZING AND METER INSTALLATION LAYOUT.
4. BUILDING SHALL BE EQUIPPED WITH FIRE SPRINKLERS.

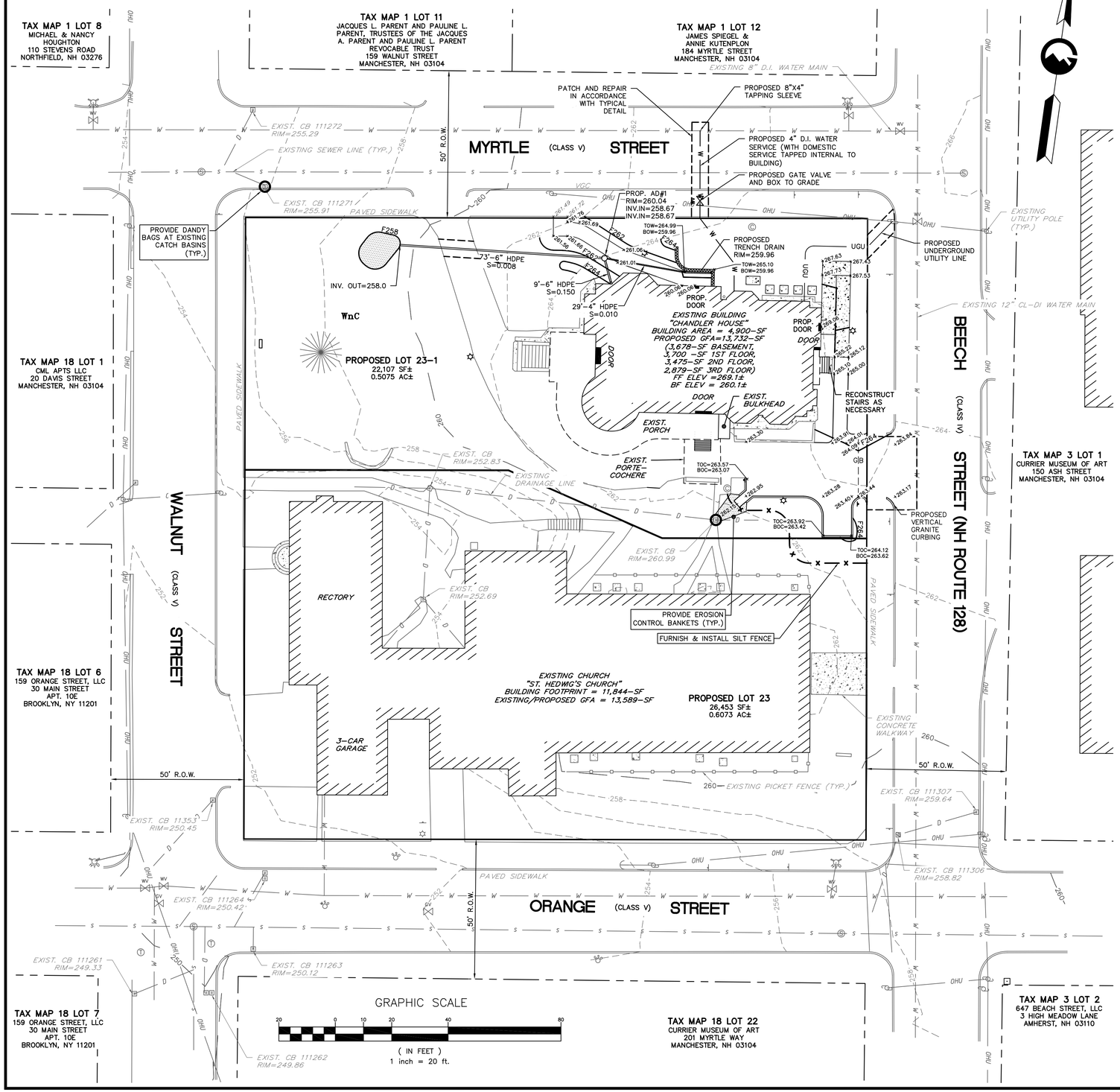

CONSTRUCTION NOTES:

1. THE PURPOSE OF THIS PLAN IS TO SHOW THE PROPOSED GRADING, DRAINAGE, UTILITY, AND EROSION CONTROLS FOR THIS PROJECT.
2. ALL WORK SHALL CONFORM TO THE CITY OF MANCHESTER STANDARD SPECIFICATIONS FOR ROAD, DRAIN & SEWER CONSTRUCTION, APPROVED AND ADOPTED JANUARY 2019. IN THE ABSENCE OF A SPECIFIC CITY SPECIFICATION, CONTRACTOR SHALL FOLLOW THE STANDARD SPECIFICATIONS FOR ROAD AND BRIDGE CONSTRUCTION, STATE OF NEW HAMPSHIRE, DEPARTMENT OF TRANSPORTATION, APPROVED AND ADOPTED 2016.
3. THE CONTRACTOR SHALL BE RESPONSIBLE FOR VERIFYING AND DETERMINING THE LOCATION, SIZE, AND ELEVATION OF ALL EXISTING UTILITIES, SHOWN OR NOT SHOWN ON THESE PLANS, PRIOR TO THE START OF ANY CONSTRUCTION THE ENGINEER SHALL BE NOTIFIED IN WRITING OF ANY UTILITIES FOUND INTERFERING WITH THE PROPOSED CONSTRUCTION, AND APPROPRIATE REMEDIAL ACTION TAKEN BEFORE PROCEEDING WITH THE WORK. THE CONTRACTOR SHALL BE RESPONSIBLE FOR CONTACTING "DIG SAFE" AT 811 AT LEAST 72 HOURS BEFORE DIGGING.
4. ALL DRAINAGE PIPE SHALL BE INSTALLED FOLLOWING MANUFACTURER'S INSTALLATION INSTRUCTIONS.
5. ALL DISTURBED AREAS ARE TO BE LOAMED AND SEEDED.
6. SEE THE EROSION CONTROL PLAN FOR THE LOCATION OF THE TEMPORARY EROSION CONTROL DEVICES.
7. SEE DETAILS FOR DRAINAGE SPECIFICATIONS.
8. MATERIAL STOCKPILES SHALL BE ON LEVEL SITES WITH SILT FENCE INSTALLED AROUND THE PILE. STOCKPILES MUST BE SEEDED AND MULCHED IF STORED MORE THAN 14 DAYS.

EROSION CONTROL NOTES:

1. THE PURPOSE OF THIS PLAN IS TO DEPICT THE REQUIRED ONSITE TEMPORARY CONSTRUCTION EROSION CONTROL MEASURES.
2. ALL MEASURES IN THE PLAN SHALL MEET AS A MINIMUM THE BEST MANAGEMENT PRACTICES SET FORTH IN VOLUME 3 OF THE NEW HAMPSHIRE STORMWATER MANUAL "EROSION AND SEDIMENT CONTROLS DURING CONSTRUCTION" AS PUBLISHED AND AMENDED BY THE NEW HAMPSHIRE DEPARTMENT OF ENVIRONMENTAL SERVICES.
3. WHENEVER PRACTICAL, NATURAL VEGETATION SHALL BE RETAINED, PROTECTED OR SUPPLEMENTED. THE STRIPPING OF VEGETATION SHALL BE DONE IN A MANNER THAT MINIMIZES SOIL EROSION.
4. APPROPRIATE EROSION AND SEDIMENT CONTROL MEASURES SHALL BE INSTALLED PRIOR TO LAND DISTURBANCE.
5. THE AREA OF DISTURBANCE SHALL BE KEPT TO A MINIMUM. DISTURBED AREAS REMAINING IDLE FOR MORE THAN 30 DAYS SHALL BE STABILIZED.
6. MEASURES SHALL BE TAKEN TO CONTROL EROSION WITHIN THE PROJECT AREA. SEDIMENT IN RUNOFF WATER SHALL BE TRAPPED AND RETAINED WITHIN THE PROJECT AREA USING APPROVED MEASURES.
7. ALL TEMPORARY EROSION AND SEDIMENT CONTROL MEASURES SHALL BE MAINTAINED IN FUNCTIONING CONDITION UNTIL FINAL SITE STABILIZATION IS ACCOMPLISHED.
8. ALL TEMPORARY EROSION AND SEDIMENT CONTROL MEASURES SHALL BE REMOVED AFTER FINAL SITE STABILIZATION. TRAPPED SEDIMENT AND OTHER DISTURBED SOIL AREAS RESULTING FROM THE REMOVAL OF TEMPORARY MEASURES SHALL BE PERMANENTLY STABILIZED WITHIN 30 DAYS UNLESS CONDITIONS DICTATE OTHERWISE.
9. THE CITY OF MANCHESTER SHALL RESERVE THE RIGHT TO REQUIRE FURTHER EROSION CONTROL PRACTICES DURING CONSTRUCTION SHOULD THEY FIND IT NECESSARY.
10. THE RESPONSIBLE PARTY SHALL INSTALL, INSPECT, REPORT, OPERATE, AND MAINTAIN ALL STORMWATER MANAGEMENT AND EROSION CONTROL MEASURES REQUIRED BY THESE PLANS.
11. TEMPORARY EROSION CONTROL MEASURES SHALL BE INSTALLED IN STRICT ACCORDANCE WITH PROJECT PLANS. IN ADDITION, SIMILAR MEASURES SHALL BE INSTALLED WHERE AND WHEN THE FIELD CONDITION, OR FIELD OPERATION OF THE INDIVIDUAL SITE CONTRACTOR, MAY WARRANT.
12. ALL DISTURBED AREAS DESIGNATED TO BE TURF, SHALL RECEIVE A MINIMUM APPLICATION OF 4 INCHES OF LOAM (COMPACTED THICKNESS), PRIOR TO FINAL SEEDING AND MULCHING.
13. IN THE EVENT THAT, DURING CONSTRUCTION OF ANY PORTION OF THIS PROJECT, A WINTER SHUTDOWN IS NECESSARY, THE CONTRACTOR SHALL STABILIZE ALL INCOMPLETE WORK AND PROVIDE FOR SUITABLE METHODS OF DIVERTING RUNOFF IN ORDER TO ELIMINATE SHEET FLOW ACROSS FROZEN SURFACES.
14. DUST SHALL BE CONTROLLED BY THE USE OF WATER AS NECESSARY THROUGHOUT THE CONSTRUCTION PERIOD, IN ACCORDANCE WITH ENV-A 1000.
15. IN NO WAY ARE THOSE TEMPORARY EROSION CONTROL MEASURES INDICATED ON THESE PLANS TO BE CONSIDERED ALL INCLUSIVE. THE CONTRACTOR SHALL USE JUDGEMENT IN INSTALLING SUPPLEMENTARY EROSION CONTROL MEASURES WHERE AND WHEN SPECIFIC SITE CONDITIONS AND/OR CONSTRUCTION METHODOLOGIES MAY WARRANT.

LEGEND

- GAS VALVE
- FIRE HYDRANT
- UTILITY POLE
- SIGN
- WATER VALVE
- GAS SHUT OFF
- WATER SHUT OFF
- SEWER MANHOLE
- TELEPHONE MANHOLE
- CAP
- CATCH BASIN
- LIGHT FIXTURE
- EX. FENCE
- EXIST. VERTICAL GRANITE CURB
- EX. EDGE OF PAVEMENT
- PROP. VERTICAL GRANITE CURB
- PROP. EDGE OF PAVEMENT
- PROP. EDGE OF WALKWAY
- EX. BUILDING
- ABUTTER LINE
- PROPERTY LINE
- PROPOSED PROPERTY LINE
- EX. CONCRETE
- PROP. CONCRETE
- PROP. RETAINING WALL
- EXISTING MAJOR CONTOURS
- EXISTING MINOR CONTOURS
- F148 PROP. 2 FOOT CONTOURS
- W WATER LINE
- S SEWER LINE
- D DRAINAGE LINE

DIG SAFE — CALL TOLL FREE 811 — DAMAGE PREVENTION SYSTEM — UTILITIES UNDERGROUND

SCS SOILS LEGEND

WnC WINDSOR-URBAN LAND COMPLEX, 3-5% SLOPES

EROSION & SEDIMENT CONTROL LEGEND

- TEMPORARY DANDY BAGS
- SILT FENCE
- EROSION CONTROL BLANKETS

RESERVED FOR APPROVAL STAMP AND SIGNATURE

GRANITE ENGINEERING
civil engineering
land planning
municipal services

REVISIONS

No.	DATE	COMMENTS	BY

OWNER:
ROMAN CATHOLIC BISHOP OF MANCHESTER
153 ASH STREET
MANCHESTER, NH 03104

APPLICANT:
CURRIER MUSEUM OF ART
150 ASH STREET
MANCHESTER, NH 03104

GRANITE ENGINEERING
civil engineering • land planning • municipal services
250 Commercial Street, Suite 3008
Manchester,
New Hampshire 03101
603.518.8030
www.GraniteEng.com

STAMP:
STATE OF NEW HAMPSHIRE
JEFFREY D. MERRITT
No. 11778
LICENSED
PROFESSIONAL ENGINEER
10.05.20

LOCATION:
TAX MAP 18 LOT 23-1
147 WALNUT STREET
MANCHESTER, NEW HAMPSHIRE
HILLSBOROUGH COUNTY

PROJECT:
CHANDLER HOUSE

TITLE:
GRADING, DRAINAGE, UTILITY, & EROSION CONTROL PLAN

PROJECT No.	DATE:	SCALE:
20-0731-1	OCTOBER 5, 2020	HORIZ. 1"=20'
SHEET: 4 OF 9		

P:\20\2007311\Dwg\Production Plans\2007311 - SITE.dwg, GRADING, 9/30/2020 4:25:41 PM, gmerritt, Bluebeam PDF, AVFLD_(22.00_x_34.00_Inches), 1:1

GENERAL NOTES:

1. THE PURPOSE OF THIS PLAN IS TO ILLUSTRATE THE PROPOSED LIGHTING FOR THE PROJECT.
2. ALL FIXTURES SHALL BE AS SPECIFIED BY CHARRON, LLC.
3. ALL PROPOSED FIXTURES ARE FULL CUTOFF FIXTURES
4. POLE MOUNTED LIGHT SHALL BE 10 FEET ABOVE GRADE.

LUMINAIRE SCHEDULE

SYMBOL	QTY	LABEL	ARRANGEMENT	DESCRIPTION
⊙	4	S	SINGLE	ENT32-B-37W3K-C-B / 410AS188T300NSBC2BK

..\..\Users\Owner\Desktop\charron logo.png

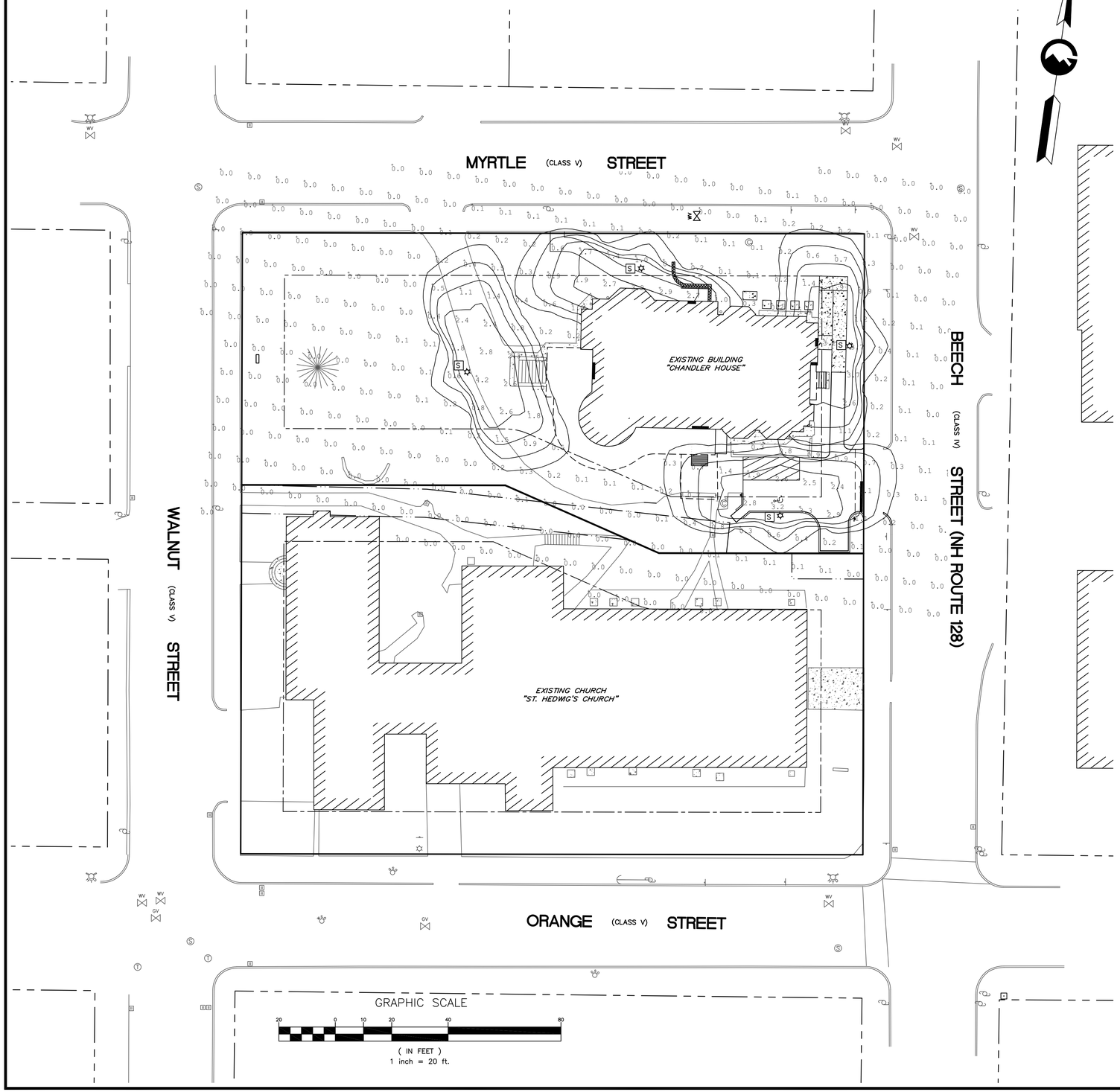

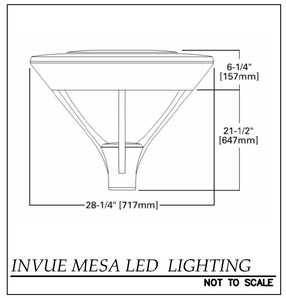

INVUE MESA LED LIGHTING
NOT TO SCALE

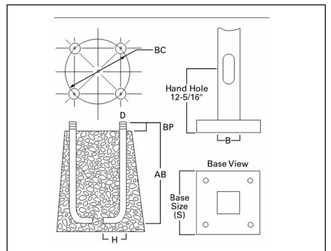

ROUND TAPERED ALUMINUM POLE
NOT TO SCALE

GRANITE ENGINEERING
civil engineering
land planning
municipal services

REVISIONS

No.	DATE	COMMENTS	BY

OWNER:
ROMAN CATHOLIC BISHOP OF MANCHESTER
153 ASH STREET
MANCHESTER, NH 03104

APPLICANT:
CURRIER MUSEUM OF ART
150 ASH STREET
MANCHESTER, NH 03104

GRANITE ENGINEERING
civil engineering • land planning • municipal services
250 Commercial Street, Suite 3008
Manchester,
New Hampshire 03101
603.518.8030
www.GraniteEng.com

STAMP:
STATE OF NEW HAMPSHIRE
JEFFREY D. MERRITT
No. 11778
LICENSED
PROFESSIONAL ENGINEER
10.05.20

LOCATION:
TAX MAP 18 LOT 23-1
147 WALNUT STREET
MANCHESTER, NEW HAMPSHIRE
HILLSBOROUGH COUNTY

PROJECT:
CHANDLER HOUSE

TITLE:
LIGHTING PLAN

PROJECT No.	DATE:	SCALE:
20-0731-1	OCTOBER 5, 2020	HORIZ. 1"=20'
SHEET: 5 OF 9		

P:\0\2007311\dwg\Production Plans\2007311-LIGHTING.dwg, LAYOUT, 9/30/2020 4:26:12 PM, jmerritt, Bluebeam PDF, ANSI_D_(22.00_x_34.00_Inches), 1:1

GENERAL NOTES:

1. BASE PLAN DEVELOPED FROM INFORMATION PROVIDED BY GRANITE ENGINEERING, LLC.
2. VERIFY LOCATIONS, ELEVATIONS, AND DIMENSIONS IN THE FIELD, PRIOR TO CONSTRUCTION. VERIFY FIELD CONDITIONS RELATING TO WORK TO BE INSTALLED. NOTIFY LANDSCAPE ARCHITECT OF ANY UNUSUAL OR DIFFICULT CONDITIONS IN A TIMELY FASHION PRIOR TO CONSTRUCTION CONCERNING THE CONDITION IN QUESTION.
3. ALL WORK SHALL CONFORM TO THE REQUIREMENTS OF THE CITY OF MANCHESTER AND STATE OF NEW HAMPSHIRE. NOTIFY APPROPRIATE AGENCIES AT LEAST 48 HOURS PRIOR TO PERFORMING THE WORK UNDER THEIR JURISDICTION.
4. CONTRACTOR IS RESPONSIBLE FOR SECURING AND PAYING FOR ALL CONSTRUCTION PERMITS AND LICENSES REQUIRED TO COMPLETE SITE WORK. CONTRACTOR IS RESPONSIBLE FOR ALL APPROPRIATE INSPECTIONS OF HIS/HER WORK.
5. ALL WORK SHALL BE OF WORKMANLIKE QUALITY AND IN CONFORMANCE WITH ALL APPLICABLE CODES. CONTRACTOR SHALL READ ALL ZONING AND ENVIRONMENTAL PERMITS WHICH PERTAIN TO THE PROJECT AND SHALL COMPLY WITH ALL THE CONDITIONS THEREIN.
6. NOTIFY LANDSCAPE ARCHITECT AT LEAST 72 HOURS PRIOR TO ANY ROUTINE REQUIRED FIELD OBSERVATION. OBTAIN LANDSCAPE ARCHITECTS APPROVAL OF THE LAYOUT OF ALL IMPROVEMENTS PRIOR TO CONSTRUCTION.
7. CONTRACTOR IS RESPONSIBLE FOR REPAIR OF DAMAGE OR DISTURBANCE TO OTHER AREAS WHICH MAY OCCUR AS THE RESULT OF HIS/HER WORK WHETHER WITHIN OR OUTSIDE OF THE CONTRACT LIMIT LINES.
8. CONSTRUCTION SHALL FOLLOW THE SEQUENCES AND CONDITIONS ESTABLISHED IN THE SPECIFICATIONS AND PERMITS.
9. IT IS INTENDED THAT THE WORK BE EXECUTED IN ACCORDANCE WITH THE BEST CUSTOMARY BUILDING PRACTICES. IF WORK IS REQUIRED IN A MANNER TO MAKE IT IMPOSSIBLE TO PRODUCE FIRST-CLASS WORK OR IF ERRORS, CONFLICTS OR DISCREPANCIES APPEAR AMONG THE CONTRACT DOCUMENTS, INFORM THE LANDSCAPE ARCHITECT IMMEDIATELY AND REQUEST INTERPRETATION BEFORE PROCEEDING WITH THE WORK.
10. IF CONTRACTOR FAILS TO MAKE SUCH A STATEMENT AND REQUEST, NO EXCUSE WILL THEREAFTER BE ENTERTAINED, NOR ADDITIONAL EXPENSE BE ACCEPTED, FOR FAILURE TO CARRY OUT WORK IN A SATISFACTORY MANNER. SHOULD CONFLICT OCCUR IN OR BETWEEN DRAWINGS AND SPECIFICATIONS, CONTRACTOR IS DEEMED TO HAVE ESTIMATED ON THE MORE EXPENSIVE WAY OF DOING WORK UNLESS HE/SHE SHALL HAVE OBTAINED A WRITTEN DECISION, BEFORE SUBMITTING HIS BID, AS TO WHICH METHOD OR MATERIALS WILL BE REQUIRED.
11. CONTRACTOR IS RESPONSIBLE FOR ALL MATERIALS AND EQUIPMENT STORED AT SITE.
12. EROSION AND SEDIMENTATION CONTROL DEVICES SHALL BE IN PLACE PRIOR TO THE COMMENCEMENT OF ANY WORK.
13. ANY DISCREPANCIES SHALL BE REPORTED IMMEDIATELY TO THE LANDSCAPE ARCHITECT FOR DIRECTION AND RESOLUTION PRIOR TO ANY FURTHER WORK.
14. VISIBLE EXISTING CONDITIONS WHERE FIELD LOCATED, AND UNDERGROUND UTILITY LOCATIONS ARE APPROXIMATE. SITE SUBCONTRACTOR SHALL VERIFY ALL UTILITY LOCATIONS, DIMENSIONS, AND GRADES. PRIOR TO START OF ANY FOUNDATION OR UTILITY WORK.
15. WRITTEN DIMENSIONS HAVE PRECEDENCE OVER SCALED DIMENSIONS. THE CONTRACTOR SHALL USE CAUTION WHEN SCALING REPRODUCED PLANS. IN CASE OF CONFLICT BETWEEN THIS PLAN SET AND ANY OTHER DRAWING AND/OR SPECIFICATION, THE LANDSCAPE ARCHITECT SHALL BE NOTIFIED IMMEDIATELY FOR CLARIFICATIONS.
16. THE CONTRACTOR IS RESPONSIBLE FOR THE MEANS AND METHODS OF CONSTRUCTION AND FOR CONDITIONS AT THE SITE. THESE PLANS, PREPARED BY TERRAIN PLANNING & DESIGN LLC, DO NOT EXTEND TO OR INCLUDE SYSTEMS PERTAINING TO THE SAFETY OF THE CONSTRUCTION CONTRACTOR OR THEIR EMPLOYEES, AGENTS OR REPRESENTATIVES IN THE PERFORMANCE OF THE WORK. THE SEAL OF THE SURVEYOR,ENGINEER OR LANDSCAPE ARCHITECT HEREON DOES NOT EXTEND TO ANY SUCH SAFETY SYSTEMS THAT MAY NOW OR HEREAFTER BE INCORPORATED INTO THESE PLANS. THE CONSTRUCTION CONTRACTOR SHALL PREPARE OR OBTAIN THE APPROPRIATE SAFETY SYSTEMS WHICH MAY BE REQUIRED BY THE U.S. OCCUPATIONAL SAFETY AND HEALTH ADMINISTRATION (OSHA) AND/OR LOCAL REGULATIONS.
17. IT SHALL BE THE CONTRACTOR'S RESPONSIBILITY TO FAMILIARIZE HIMSELF WITH THE SITE AND ALL EXISTING CONDITIONS SURROUNDING IT AND THEREON. THE CONTRACTOR SHALL ADVISE THE APPROPRIATE AUTHORITY OF HIS INTENTIONS AT LEAST 48 HOURS IN ADVANCE.
18. THESE PLANS WERE PREPARED UNDER THE SUPERVISION OF A LICENSED PROFESSIONAL LANDSCAPE ARCHITECT. TERRAIN PLANNING & DESIGN LLC ASSUMES NO LIABILITY AS A RESULT OF ANY CHANGES OR NON-CONFORMANCE WITH THESE PLANS EXCEPT UPON THE WRITTEN APPROVAL OF THE LANDSCAPE ARCHITECT OF RECORD.
19. TERRAIN PLANNING & DESIGN LLC ASSUMES NO LIABILITY FOR WORK PERFORMED WITHOUT AN ACCEPTABLE PROGRAM OF TESTING AND INSPECTION AS APPROVED BY THE LANDSCAPE ARCHITECT OF RECORD.
20. BASE PREPARATION UNDER ALL HARD SURFACES TO BE COMPACTED TO 98% STANDARD PROCTOR DENSITY.
21. SITE CONTRACTOR IS RESPONSIBLE FOR CONTACTING DIG SAFE PRIOR TO ANY EXCAVATION, 1-888-DIG-SAFE.

PLANTING NOTES:

1. CONTRACTOR SHALL OBTAIN APPROVAL FROM LANDSCAPE ARCHITECT PRIOR TO PURCHASING AND/OR INSTALLING SUBSTITUTE PLANT MATERIAL PRIOR TO PURCHASE OF ANY SUBSTITUTE MATERIALS.
2. CONSTRUCTION ACCESS WILL BE AS DIRECTED BY LANDSCAPE ARCHITECT. CONTRACTOR IS RESPONSIBLE FOR RESTORATION OF ACCESS ROUTE AND ALL AREAS DISTURBED BY PLANTING OPERATIONS UPON COMPLETION OF CONSTRUCTION OPERATIONS, AT NO ADDITIONAL COST TO THE OWNER.
3. LAYOUT OF ALL PLANTING BEDS AND LOCATION OF PLANTS TO BE APPROVED BY LANDSCAPE ARCHITECT ON SITE PRIOR TO CONSTRUCTION AND INSTALLATION.
4. CONTRACTOR TO REMOVE ALL DEBRIS GENERATED BY PLANT INSTALLATION. DEBRIS TO BE DISPOSED OF IN A LEGAL MANNER.
5. ALL PLANT MATERIAL SHALL BE GUARANTEED TO BE IN GOOD, HEALTHY AND FLOURISHING CONDITION FOR ONE YEAR FROM THE DATE OF FINAL INSTALLATION APPROVAL BY LANDSCAPE ARCHITECT. CONTRACTOR SHALL REPLACE, WITHOUT COST TO OWNER, AND AS SOON AS WEATHER CONDITIONS PERMIT, ALL DEAD AND NON-FLOURISHING PLANTS AS DETERMINED BY THE LANDSCAPE ARCHITECT. REPLACEMENT PLANTS SHALL BE BE GUARANTEED IDENTICALLY TO ORIGINAL PLANTS, TIME PERIOD COMMENCING FROM DATE OF REPLACEMENT PLANTING APPROVAL BY LANDSCAPE ARCHITECT.
6. ALL BEDS TO BE MULCHED WITH 4" DEPTH SHREDDED BARK MULCH UNLESS NOTED OTHERWISE.
7. LANDSCAPE AREAS SHALL BE PROVIDED WITH UNDERGROUND IRRIGATION SYSTEMS GOVERNED BY RAIN SENSORS.

LANDSCAPE CALCULATIONS

REQUIRED PARKING LOT SHADE TREES
PROPOSED PAVED AREA = 1,000 SF
SHADE TREES REQUIRED:
1 SHADE TREE/900 SF FOR FIRST 3,600 SF + 1 SHADE TREE/2,000 SF THEREAFTER
1,000 / 900 = 1.1 = 2 SHADE TREES REQUIRED
SHADE TREES PROVIDED = 2 TREES PROPOSED

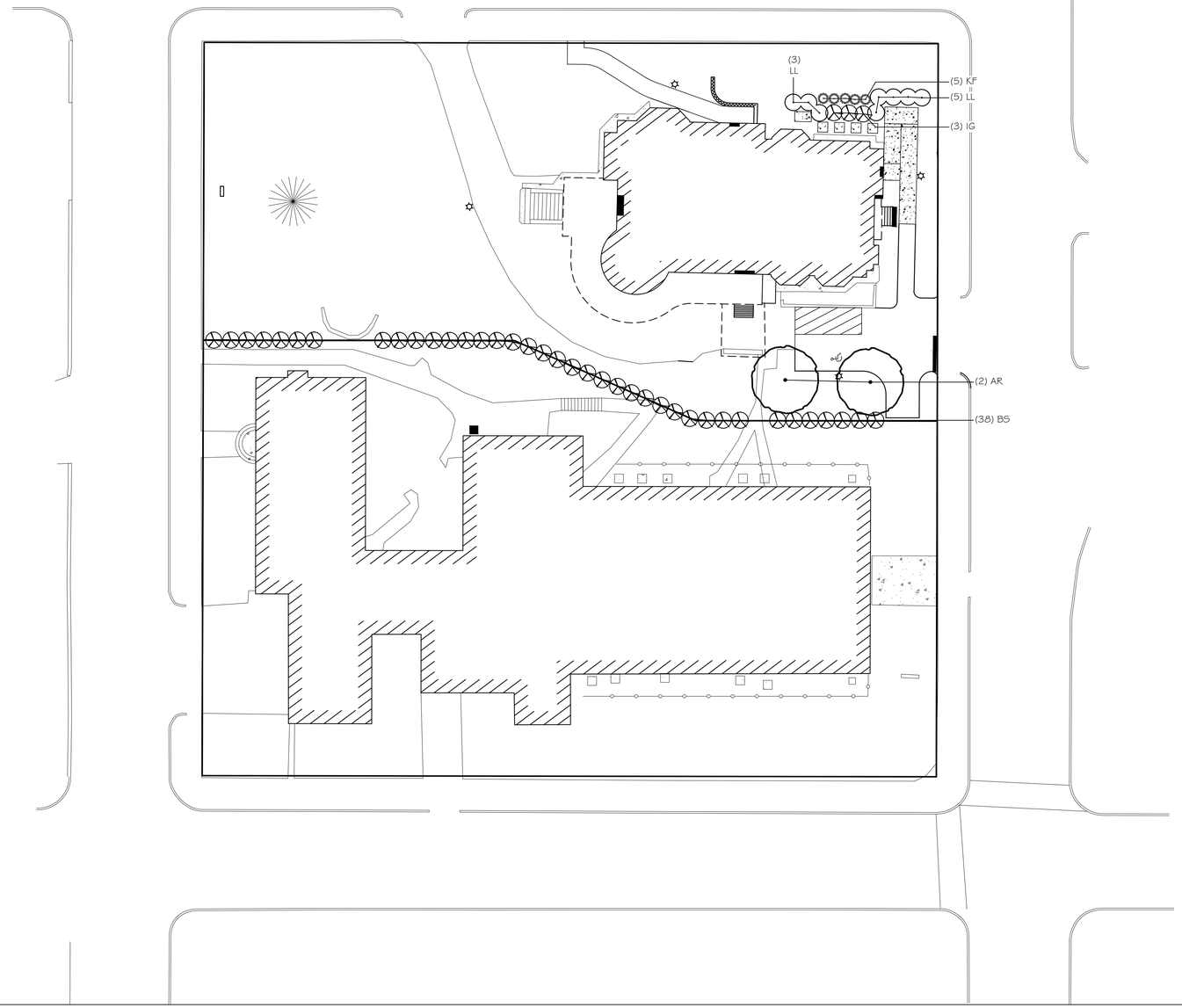

Plant Schedule

Botanical Name/ Common Name	Size	Label	Quantity	Mature Height
Trees				
Acer rubrum 'October Glory' / October Glory Red Maple	3-3.5" CAL.	AR	2	40-60'
Shrubs				
Buxus sempervirens 'Newport Blue' / Newport Blue Boxwood	#3	BS	38	4'
Hydrangea paniculata 'Little Lamb' / Little Lamb Panicle Hydrangea	#3	LL	8	5-6'
Ilex glabra 'Compacta' / Compact Inkberry	#5	IG	3	5-6'
Grasses				
Calamagrostis a. 'Karl Foerster' / Karl Foerster Feather Reed Grass	#2	KF	5	5'

DIG SAFE
MA ME NH RI VT
1-888-DIG-SAFE
UTILITY MARK-OUTS, PLANT DAMAGE PREVENTION SYSTEM
CONTACT DIG SAFE 72 HOURS PRIOR TO CONSTRUCTION

LOAM & SEED ALL DISTURBED AREAS

0 10' 20' 40' 60' 100'

I, ROMY N. MAURER, HEREBY CERTIFY THAT I AM THE DESIGNER OF THIS LANDSCAPE PLAN AND THAT I AM A PROFESSIONAL LANDSCAPE ARCHITECT LICENSED BY THE STATE OF NEW HAMPSHIRE.

ROMY N. MAURER, ASLA, PLA, LICENSE #86

terrain
planning & design llc
311 kast hill road
hopkinton, nh 03229
603. 746. 3512
terrainplanning.com

CHANDLER HOUSE

Site Location:
147 Walnut Street
Manchester, NH 03104
Tax Map: 18
Lot #: 23-1

Prepared For:
Granite Engineering
250 Commercial Street
Suite 3008
Manchester, NH 03101

LANDSCAPE PLAN

DATE: 09 - 28 - 2020

SCALE: 1" = 20'

PROJECT #: 2077

Drawn By: RNM

Checked By: ERB

REVISIONS: DATE:
Revised per Client Comments 09/30/2020

This plan is the property of Terrain Planning & Design LLC. Use or reproduction of this plan by any means without permission or purchase from Terrain Planning & Design LLC is prohibited.

6

N

LICENSED LANDSCAPE ARCHITECT
ROMY N. MAURER
086
STATE OF NEW HAMPSHIRE

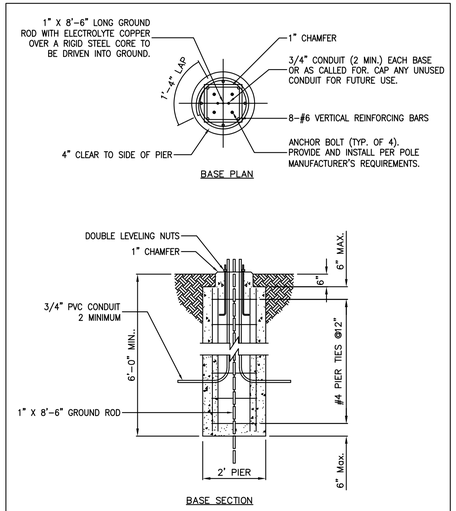

NOTES:
1. LIGHT POLE BASES. THE EXPOSED HEIGHT OF CONCRETE BASES USED TO ANCHOR POLE MOUNTED FIXTURES SHALL CONFORM TO THE FOLLOWING:
   (1) A MAXIMUM OF 2'-6" WHEN THE POLE IS WITHIN A PARKING FIELD
   (2) A MAXIMUM OF 0'-6" WHEN THE POLE IS IN LANDSCAPED OR LAWN AREAS
   (3) A MAXIMUM OF 0'-4" WHEN THE POLE IS WITHIN THE LIMITS OF HARD-SURFACED SIDEWALKS AND PEDESTRIAN WALKWAYS.
   (4) THE USE OF ORNAMENTAL BASES SHALL BE ENCOURAGED WITH ALL NEW LIGHT-POLE INSTALLATIONS.

LIGHT POLE BASE DETAIL

NOT TO SCALE

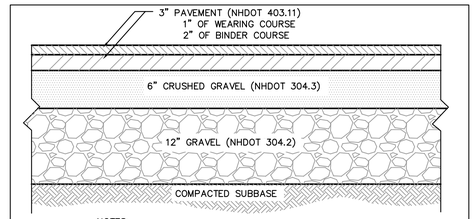

NOTES:
1. ALL GRAVELS AND SUBBASE TO BE COMPACTED TO 95%.

DRIVEWAY PAVEMENT SECTION

NOT TO SCALE

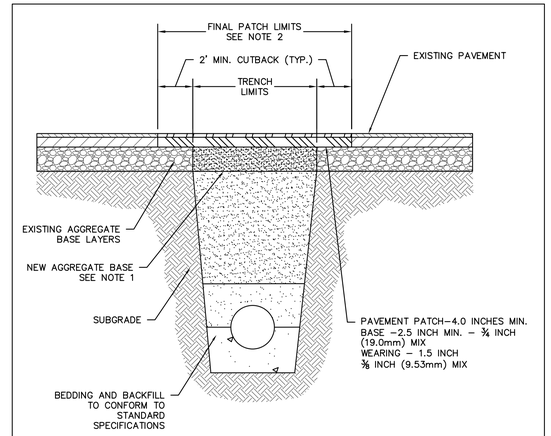

1. AGGREGATE BASE LAYER SHALL BE 12 INCHES GRAVEL TOPPED WITH 9 INCHES CRUSHED GRAVEL. IN LIEU OF THE 21 INCHES OF "GRAVEL" MATERIAL, 18 INCHES OF CRUSHED GRAVEL MAY BE ALLOWED.
2. UNLESS DIRECTED BY THE ENGINEER, FINAL PATCH DIMENSIONS SHALL BE OF SUFFICIENT WIDTH TO ALLOW PLACEMENT OF ASPHALT BY MACHINE METHOD.
3. TRENCH WIDTH SHALL BE NO LESS THAN 20 INCHES WIDE TO ALLOW ADEQUATE COMPACTION OF TRENCH BACKFILL BY MECHANICAL MEANS.
4. CUTBACK SHALL BE A MINIMUM OF 2 FEET AT TRENCH WALL OVER UNDISTURBED SUBGRADE MATERIAL.

STANDARD TRENCH PATCH - MANCHESTER

NOT TO SCALE

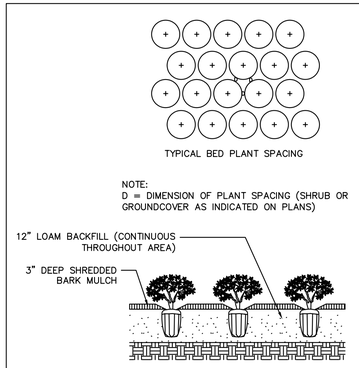

TYPICAL PERENNIAL PLANTING DETAIL

NOT TO SCALE

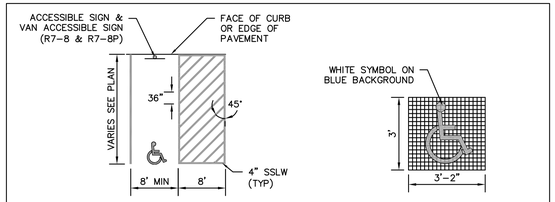

NOTES:
1. VAN ACCESS AISLE SHALL BE A MINIMUM 8' WIDE. AN R7-8P "VAN ACCESSIBLE" SIGN WILL BE ADDED TO ACCESSIBLE SIGN R7-8.
2. (T) = THERMOPLASTIC PAVEMENT MARKING.

PERPENDICULAR ACCESSIBLE PARKING AND STRIPING DETAIL

NOT TO SCALE

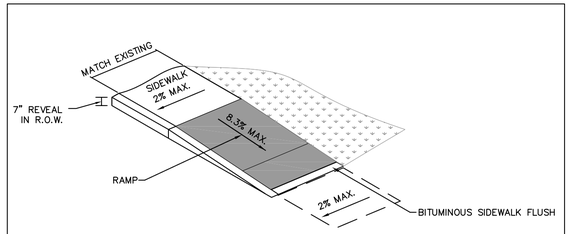

CURB RAMP DETAIL

NOT TO SCALE

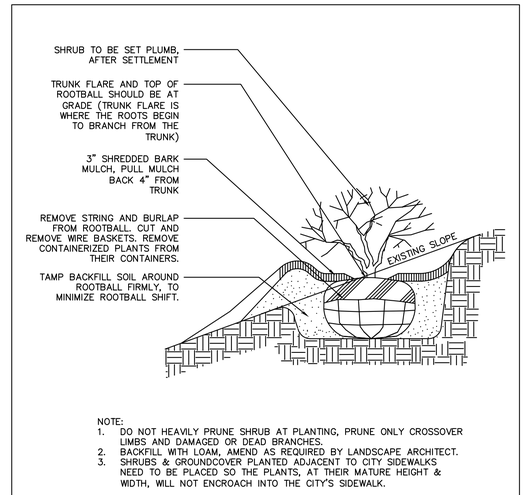

NOTE:
1. DO NOT HEAVILY PRUNE SHRUB AT PLANTING, PRUNE ONLY CROSSOVER LIMBS AND DAMAGED OR DEAD BRANCHES.
2. BACKFILL WITH LOAM, AMEND AS REQUIRED BY LANDSCAPE ARCHITECT.
3. SHRUBS & GROUNDCOVER PLANTED ADJACENT TO CITY SIDEWALKS NEED TO BE PLACED SO THE PLANTS, AT THEIR MATURE HEIGHT & WIDTH, WILL NOT ENCROACH INTO THE CITY'S SIDEWALK.

TYPICAL SHRUB PLANTING DETAIL

NOT TO SCALE

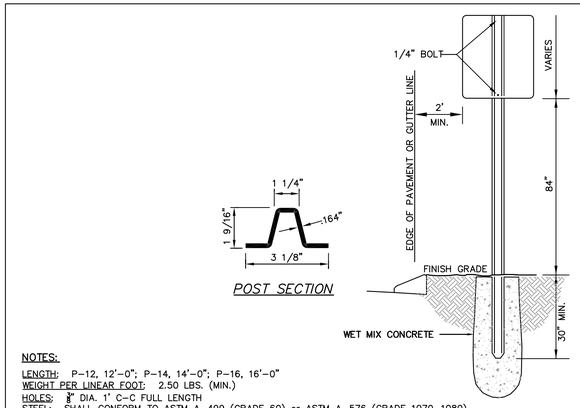

NOTES:
LENGTH: P-12, 12'-0"; P-14, 14'-0"; P-16, 16'-0"
WEIGHT PER LINEAR FOOT: 2.50 LBS. (MIN.)
HOLES: 3/8" DIA. 1' C-C FULL LENGTH
STEEL: SHALL CONFORM TO ASTM A-499 (GRADE 60) or ASTM A-576 (GRADE 1070-1080)
FINISH: SHALL BE PAINTED WITH TWO COATS OF AN APPROVED MEDIUM GREEN, BAKED ON OR AIR DRIED, PAINT OF WEATHER RESISTANT QUALITY. ALL FABRICATION SHALL BE COMPLETE BEFORE PAINTING.

GENERAL NOTES:
1. POSTS SHALL BE PLUMB; ANY POST BENT OR OTHERWISE DAMAGED SHALL BE REMOVED AND PROPERLY REPLACED. POSTS MAY BE SET OF DRIVEN.
2. WHEN POSTS ARE SET, HOLES SHALL BE DUG TO THE PROPER DEPTH AFTER INSERTING POSTS, THE HOLES SHALL BE BACK FILLED WITH SUITABLE MATERIAL IN LAYERS NO TO EXCEED 6" DEEP THOROUGHLY COMPACTED, CARE BEING TAKEN TO PRESERVE THE ALIGNMENT OF THE POST.
3. WHEN POSTS ARE DRIVEN, A SUITABLE DRIVING CAP SHALL BE USED AND AFTER DRIVING THE TOP OF THE POST SHALL HAVE SUBSTANTIALLY THE SAME CROSS-SECTIONAL DIMENSION AS THE BODY OF THE POST; BATTERED HEADS WILL NOT BE ACCEPTED.
4. POSTS SHALL NOT BE DRIVEN WITH THE SIGN ATTACHED TO THE POST.
5. SIGNS SHALL BE ERECTED IN CONFORMANCE WITH THE REQUIREMENTS OF THE "MANUAL ON UNIFORM TRAFFIC CONTROL DEVICES".
6. WHEN SIGN IS IN PLACE NO PART OF POST SHALL EXTEND ABOVE THE SIGN.
7. DIMENSIONS SHOWN ARE NOMINAL
8. ALTERNATE SECTIONS MUST BE APPROVED PRIOR TO USE.

SIGN POST DETAIL

NOT TO SCALE

R1-1
30" X 30"

STOP SIGN DETAIL

NOT TO SCALE

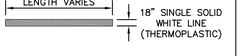

STOP BAR DETAIL

NOT TO SCALE

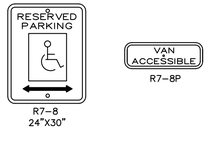

HANDICAP PARKING SIGN DETAIL

NOT TO SCALE

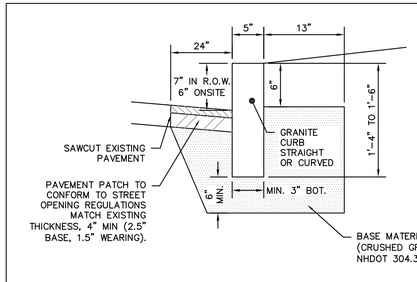

RADIUS	MAX. LENGTH
21'	3'
22'-28'	4'
29'-35'	5'
36'-42'	6'
43'-49'	7'
50'-56'	8'
57'-60'	9'
OVER 60'	10'

NOTES:
1. MINIMUM LENGTH OF CURB STONES = 3'
2. MAXIMUM LENGTH OF CURB STONES = 10'
3. MAXIMUM LENGTH OF STRAIGHT CURB STONES LAID ON CURVES - SEE CHART.
4. ADJOINING STONES SHALL HAVE THE SAME OR APPROXIMATELY THE SAME LENGTH.
5. CURB ENDS TO BE TIPPED DOWN.
6. UNLESS SPECIFIED ON THE PLANS OR BY THE ENGINEER, CURB REVEAL SHALL BE 7" WITHIN THE CITY R.O.W. AND 6" ONSITE.

GRANITE CURB DETAIL

NOT TO SCALE

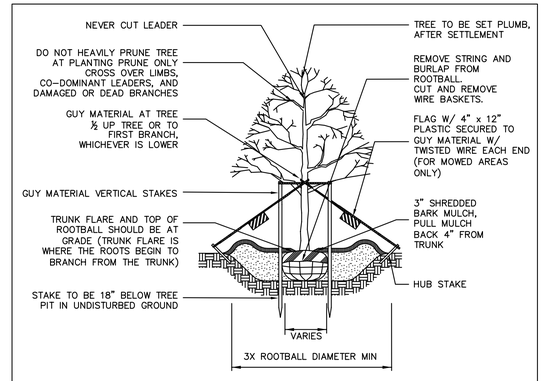

NOTES:
1. GUYING AND STAKING TO BE DETERMINED IN THE FIELD BY THE LANDSCAPE ARCHITECT. LOCAL FIELD CONDITIONS AS WELL AS PLANT CHARACTERISTICS WILL DETERMINE THE NECESSITY OF GUYING AND STAKING.
2. TYPICALLY ONLY TREES WITH A 3" OR GREATER CALIPER NEED TO BE STAKED. TREES WITH LESS THAN A 3" CALIPER NEED TO BE STAKED ONLY AS REQUIRED BY LANDSCAPE ARCHITECT.
3. ONLY WRAP TREE TRUNKS AS REQUIRED BY LANDSCAPE ARCHITECT.
4. TREE SHALL BE SET PLUMB, AFTER SETTLEMENT.
5. LOAM FOR BACKFILLING SHALL BE AMENDED AS REQUIRED BY LANDSCAPE ARCHITECT.
6. CITY TREES PLANTED ON PRIVATE PROPERTY, ADJACENT TO A PUBLIC RIGHT-OF-WAY, NEED TO BE PLANTED A MINIMUM OF 5 FEET FROM THE EDGE OF THE CITY SIDEWALK.

DECIDUOUS TREE PLANTING DETAIL

NOT TO SCALE

GRANITE ENGINEERING
civil engineering
land planning
municipal services

REVISIONS

No.	DATE	COMMENTS	BY

OWNER:
ROMAN CATHOLIC BISHOP OF MANCHESTER
153 ASH STREET
MANCHESTER, NH 03104

APPLICANT:
CURRIER MUSEUM OF ART
150 ASH STREET
MANCHESTER, NH 03104

GRANITE ENGINEERING
civil engineering • land planning • municipal services
250 Commercial Street, Suite 3008
Manchester, New Hampshire 03101
603.518.8030
www.GraniteEng.com

STAMP:
STEVEN D. PEARSON - NEW HAMPSHIRE - LICENSED PROFESSIONAL ENGINEER - No. 11778
10.05.20

LOCATION:
TAX MAP 18 LOT 23-1
147 WALNUT STREET
MANCHESTER, NEW HAMPSHIRE
HILLSBOROUGH COUNTY

PROJECT:
CHANDLER HOUSE

TITLE:
DETAILS

PROJECT No.	DATE:	SCALE:
20-0731-1	OCTOBER 5, 2020	AS SHOWN
SHEET: 7 OF 9		

P:\0\2007311\Dwg\Production Plans\2007311 - DETAILS.dwg, LAYOUT, 9/30/2020 4:27:42 PM, prentiss, Bluebeam PDF, ANSI_D_(22.00_x_34.00_Inches), 1:1

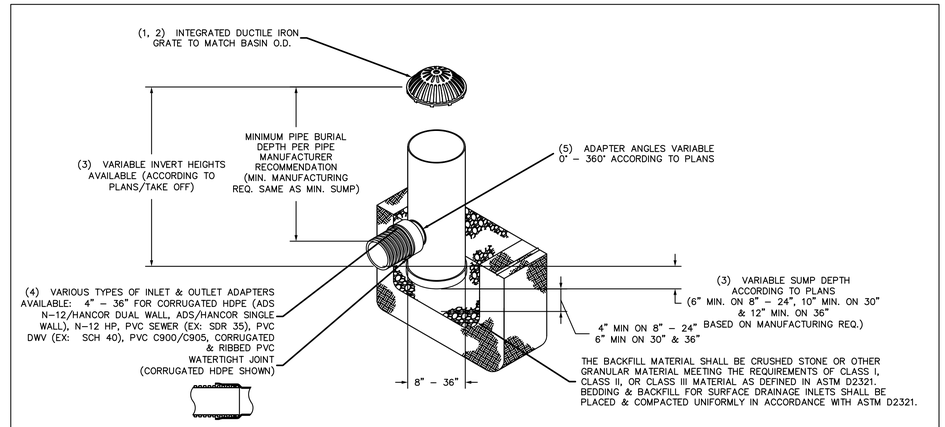

NOTES:
1. 8" – 30" DOME GRATES SHALL BE DUCTILE IRON PER ASTM A536 GRADE 70–50–05.
2. 8" & 10" DOME GRATES FIT ONTO THE DRAIN BASINS WITH THE USE OF A PVC BODY TOP. SEE DRAWING NO. 7001–110–045.
3. DRAIN BASIN TO BE CUSTOM MANUFACTURED ACCORDING TO PLAN DETAILS. RISERS ARE NEEDED FOR BASINS OVER 84" DUE TO SHIPPING RESTRICTIONS. SEE DRAWING NO. 7001–110–065.
4. DRAINAGE CONNECTION STUB JOINT TIGHTNESS SHALL CONFORM TO ASTM D3212 FOR CORRUGATED HDPE (ADS N–12/HANCOR DUAL WALL), N–12 HP, & PVC SEWER (4" – 36").
5. ADAPTERS CAN BE MOUNTED ON ANY ANGLE 0° TO 360°. TO DETERMINE MINIMUM ANGLE BETWEEN ADAPTERS SEE DRAWING NO. 7001–110–012.
6. 8" – 30" DOME GRATES HAVE NO LOAD RATING.

NYLOPLAST AREA DRAIN DETAIL

NOT TO SCALE

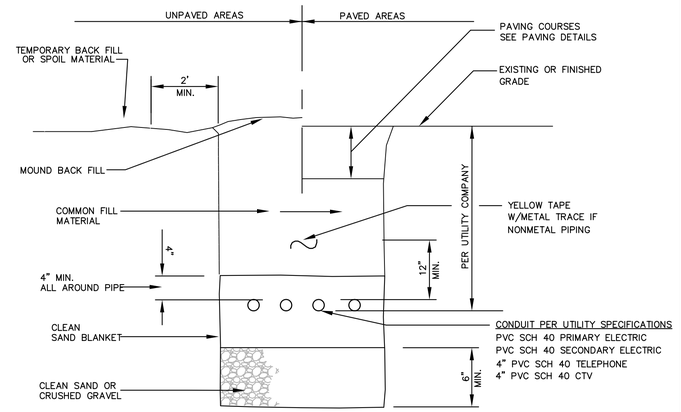

NOTES:
1. ALL UTILITY SHAPE, GRADE, ALIGNMENT, AND LOCATION FINAL DESIGN TO BE DETERMINED BY UTILITY PROVIDER.
2. ALL ELECTRICAL, PHONE, AND DATA CONDUIT MATERIALS AND METHODS OF CONSTRUCTION TO COMPLY WITH APPLICABLE UTILITY CONSTRUCTION REGULATIONS.
3. THE ABOVE TYPICAL UTILITY TRENCH DETAIL SERVES AS A GUIDE ONLY.

UTILITY TRENCH DETAIL

NOT TO SCALE

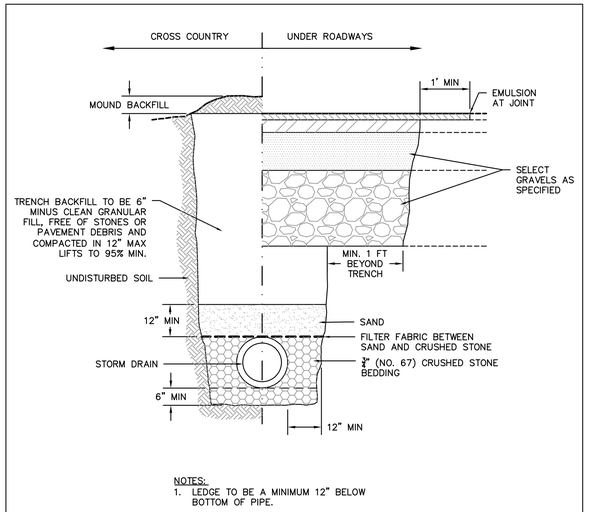

NOTES:
1. LEDGE TO BE A MINIMUM 12" BELOW BOTTOM OF PIPE.

STORM DRAIN TRENCH DETAIL

NOT TO SCALE

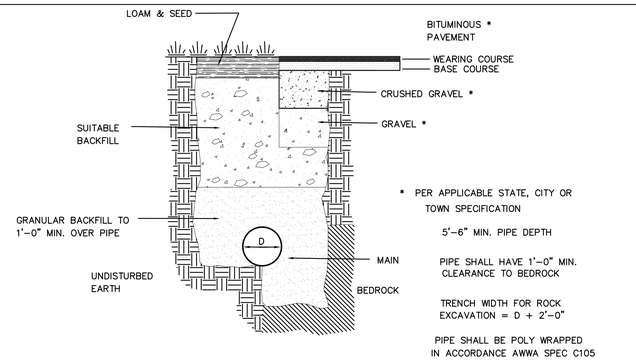

* PER APPLICABLE STATE, CITY OR TOWN SPECIFICATION

5'–6" MIN. PIPE DEPTH

PIPE SHALL HAVE 1'–0" MIN. CLEARANCE TO BEDROCK

TRENCH WIDTH FOR ROCK EXCAVATION = D + 2'–0"

PIPE SHALL BE POLY WRAPPED IN ACCORDANCE AWWA SPEC C105

TYPICAL WATER TRENCH DETAIL

NOT TO SCALE

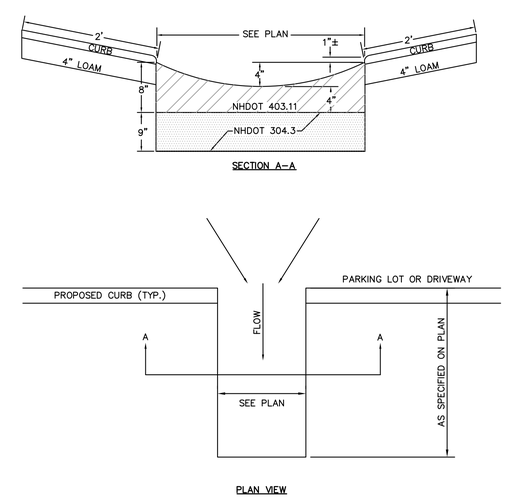

PAVED SLUICE SWALE

NOT TO SCALE

GRANITE ENGINEERING
civil engineering
land planning
municipal services

REVISIONS

No.	DATE	COMMENTS	BY

OWNER:
ROMAN CATHOLIC BISHOP OF MANCHESTER
153 ASH STREET
MANCHESTER, NH 03104

APPLICANT:
CURRIER MUSEUM OF ART
150 ASH STREET
MANCHESTER, NH 03104

GRANITE ENGINEERING
civil engineering • land planning • municipal services
250 Commercial Street, Suite 3008
Manchester,
New Hampshire 03101
603.518.8030
www.GraniteEng.com

STAMP:
STATE OF NEW HAMPSHIRE JEFFREY B. MERRITT No. 11778 LICENSED PROFESSIONAL ENGINEER
10.05.20

LOCATION:
TAX MAP 18 LOT 23-1
147 WALNUT STREET
MANCHESTER, NEW HAMPSHIRE
HILLSBOROUGH COUNTY

PROJECT:
CHANDLER HOUSE

TITLE:
DETAILS

PROJECT No.	DATE:	SCALE:
20–0731–1	OCTOBER 5, 2020	AS SHOWN
SHEET: 8 OF 9		

P:\O\2007311\dwg\Predictive Plan\2007311 - DETAILS.dwg, LAYOUT, 9/30/2020 4:28:03 PM, pmerritt, Bluebeam PDF, ARCH_D (22.00_x_34.00_inches), 1:1

1. ALL AREAS TO BE SEEDED SHALL BE PREPARED TO PROVIDE A REASONABLY FIRM BUT FRIABLE SEED BED.
2. SLOPED AREAS SHALL NOT BE LEFT TOO SMOOTH; THE SURFACE SHALL BE LEFT IN A RUFFLED CONDITION SUCH AS MAY BE PRODUCED BY THE USE OF TRACKED VEHICLES RUN UP AND DOWN THE SLOPES. SMOOTH, COMPACTED SLOPES, SUCH AS FROM BLADING, WHICH MIGHT ALLOW THE FREE FLOW OF WATER DOWN THEM SHALL BE DISKED, HARROWED, DRAGGED WITH A CHAIN OR MAT, MACHINE-RAKED, OR HAND-WORKED TO GIVE THE EFFECT OF MINIATURE TERRACES, PARTICULARLY IN SILTY OR CLAYEY SOILS. THE SLOPES SHALL BE LEFT SMOOTH ENOUGH TO ENABLE MOWING.
3. LAWN AREAS, SUCH AS WHERE LOAM HAS BEEN SPREAD, SHALL BE PREPARED FOR SEEDING. THE LOAM SHALL BE SPREAD UPON THE PREVIOUSLY PREPARED SUBGRADE SURFACE TO THE DEPTH OF 4" ± 1/2" UNLESS OTHERWISE SPECIFIED AND SHALL BE RAKED CAREFULLY TO REMOVE ALL OBJECTIONABLE MATERIALS. LOAM SHALL BE SPREAD IN SUCH A MANNER AS TO ESTABLISH A LOOSE, FRIABLE SEEDBED. IN ORDER TO MAINTAIN A CONSISTENT GRADE, LOAM PLACED ADJACENT TO LAWNS OR WHERE DIRECTED SHALL BE COMPACTED WITH A ROLLER WEIGHING APPROXIMATELY 100 POUNDS PER FOOT OF ROLLER WIDTH. ALL DEPRESSIONS EXPOSED DURING THE ROLLING PROCEDURE SHALL BE FILLED WITH ADDITIONAL LOAM, AND ROLLED.
4. LOAM SHALL CONSIST OF LOOSE FRIABLE TOPSOIL WITH NO ADMIXTURE OF REFUSE OR MATERIAL TOXIC TO PLANT GROWTH. LOAM SHALL BE FREE OF VIABLE PARTS OF PROHIBITED INVASIVE PLANTS LISTED IN TABLE 3800.1 OF PART AGR 3800. LOAM SHALL BE GENERALLY FREE FROM STONES, LUMPS, STUMPS, OR SIMILAR OBJECTS LARGER THAN 2"IN GREATEST DIAMETER, SUBSOIL, ROOTS, AND WEEDS. THE MINIMUM AND MAXIMUM PH VALUE SHALL BE FROM 5.5 TO 7.6. LOAM SHALL CONTAIN A MINIMUM OF 3 PERCENT AND A MAXIMUM OF 10 PERCENT OF ORGANIC MATTER AS DETERMINED BY LOSS BY IGNITION. NOT MORE THAN 65 PERCENT SHALL PASS A NO. 200 SIEVE AS DETERMINED BY THE WASH TEST IN ACCORDANCE WITH ASTM D 1140. IN NO INSTANCE SHALL MORE THAN 20% OF THAT MATERIAL PASSING THE NO. 4 SIEVE CONSIST OF CLAY SIZE PARTICLES.
5. ALL AREAS TO BE SEEDED SHALL MEET THE SPECIFIED GRADES AND SHALL BE FREE OF GROWTH AND DEBRIS.
6. CARE SHALL BE TAKEN TO PREVENT THE FORMATION OF LOW PLACES AND POCKETS WHERE WATER WILL STAND.
7. WHERE RYEGRASS HAS BEEN PLANTED FOR TEMPORARY EROSION CONTROL AND HAS NOT BEEN ELIMINATED PRIOR TO THE COMPLETION OF THE WORK, SUCH AREAS SHALL BE DISC-HARROWED AT LEAST 3"DEEP AND SEEDED WITH PERMANENT GRASSES TO PREVENT THE RYEGRASS FROM RESEEDING AND BECOMING COMPETITIVE WITH AND RETARDING DEVELOPMENT OF THE PERMANENT COVER.
8. SEEDING AND INITIAL FERTILIZING SHALL BE DONE BETWEEN APRIL 1 AND JUNE 1, BETWEEN AUGUST 15 AND OCTOBER 14, OR AS PERMITTED. SEEDING SHALL NOT BE DONE DURING WINDY WEATHER OR WHEN THE GROUND IS FROZEN, EXCESSIVELY WET, OR OTHERWISE UNTILLABLE. IF SEEDING IS DONE DURING JULY OR AUGUST, ADDITIONAL MULCH MATERIAL MAY BE REQUIRED BY THE ENGINEER.
9. FERTILIZER SHALL BE UNIFORMLY APPLIED. THE RATE OF APPLICATION SHALL BE A RATE OF 2.0 POUNDS OF NITROGEN PER 1,000 SQUARE FEET. NOT LESS THAN THREE MONTHS SHALL ELAPSE BETWEEN THE INITIAL FERTILIZATION AND THE REFERTILIZATION. NO REFERTILIZATION WILL BE ALLOWED BETWEEN NOVEMBER 1, OR WHEN THE GROUND HAS FROZEN, AND THE FOLLOWING APRIL 1, OR BETWEEN JUNE 1 AND THE FOLLOWING SEPTEMBER 1. REFERTILIZATION WILL BE ALLOWED BETWEEN AUGUST 15 AND 31 ONLY WHEN IT IS DETERMINED THAT THE PERMANENT GRASSES HAVE DEVELOPED WELL AND FEW WEEDS HAVE APPEARED, AND SUCH REFERTILIZATION WILL NOT TEND TO PROMOTE THE GROWTH OF NOXIOUS WEEDS.
10. THE CONTRACTOR SHALL BE RESPONSIBLE FOR PROTECTING AND CARING FOR SEEDED AREAS UNTIL ACCEPTANCE OF THE WORK. CONTRACTOR SHALL REPAIR AT HIS OWN EXPENSE ANY DAMAGE TO SEEDED AREAS CAUSED BY PEDESTRIAN OR VEHICULAR TRAFFIC OR OTHER CAUSES.
11. THE SEEDED AREAS SHALL BE CAREFULLY AND SUITABLY WATERED AS NECESSARY TO PRODUCE A SATISFACTORY GROWTH.
12. AREAS SEEDED WITH PARK SEED SHALL BE MOWED WHENEVER NECESSARY TO KEEP THE GROWTH BETWEEN 3 AND 6" IN ORDER TO ALLOW LIGHT TO PENETRATE TO THE SHORTER, SLOWER GROWING SPECIES IN THE MIXTURE.
13. AREAS SEEDED WITH SLOPE SEED MAY BE ORDERED MOWED WHENEVER THE CONTRACT EXTENDS INTO A SECOND GROWING SEASON. WEEDS GROWING IN AREAS SEEDED WITH THE SLOPE SEED SHALL BE CUT BACK TO PREVENT THEM FROM DOMINATING THE DESIRED GRASS PLANTS
14. ACCEPTABLE SEED MIXTURES ARE AS FOLLOWS:

TYPICAL LAWN MIX

KIND OF SEED	MINIMUM PURITY (%)	MINIMUM GERMINATION (%)	POUNDS/ACRE (TOTAL 120 LBS)
CREEPING RED FESCUE	96	85	40
PERENNIAL RYEGRASS	98	90	50
KENTUCKY BLUEGRASS	97	85	25
REDTOP	95	80	5

WILDFLOWER SLOPE SEED (3:1 OR GREATER)

KIND OF SEED	MINIMUM PURITY (%)	MINIMUM GERMINATION (%)	POUNDS/ACRE (TOTAL 95 LBS)
CREEPING RED FESCUE	96	85	35
PERENNIAL RYEGRASS	98	90	30
REDTOP	95	80	5
ALSIKE CLOVER	97	90	5
BIRDSFOOT TREFOIL	98	80	5
LANCE-LEAVED COREOPSIS	95	80	4
OXEYE DAISY	95	80	3
BLACKEYED SUSAN	95	80	4
WILD LUPINE	95	80	4

TYPICAL SLOPE SEED (3:1 OR GREATER)

KIND OF SEED	MINIMUM PURITY (%)	MINIMUM GERMINATION (%)	POUNDS/ACRE (TOTAL 80 LBS)
CREEPING RED FESCUE	96	85	35
PERENNIAL RYEGRASS	98	90	30
REDTOP	95	80	5
ALSIKE CLOVER	97	90	5
BIRDSFOOT TREFOIL	98	80	5

TURF ESTABLISHMENT SPECIFICATIONS

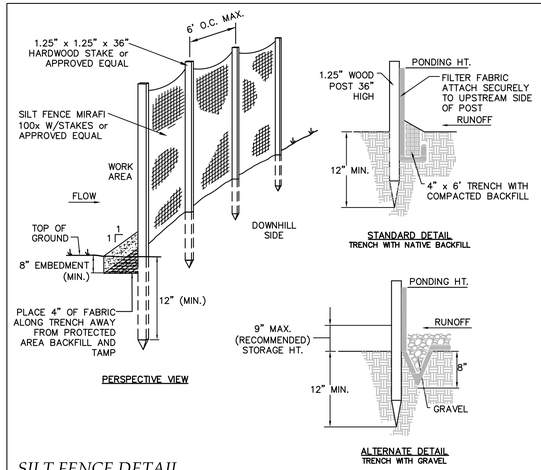

CONSTRUCTION NOTES:
1. THE GEOTEXTILE FABRIC SHALL MEET THE DESIGN CRITERIA FOR SILT FENCES.
2. THE FABRIC SHALL BE EMBEDDED A MINIMUM OF 8 INCHES INTO THE GROUND AND THE SOIL COMPACTED OVER THE EMBEDDED FABRIC.
3. WOVEN WIRE FENCE SHALL BE FASTENED SECURELY TO THE FENCE POSTS WITH WIRE TIE OR STAPLES WHERE NOTED OR AS DIRECTED BY DESIGN ENGINEER.
4. FILTER CLOTH SHALL BE FASTENED SECURELY TO THE WOVEN WIRE FENCE WITH TIES SPACED EVERY 24 INCHES AT THE TOP, MIDSECTION AND BOTTOM.
5. WHEN TWO SECTIONS OF FILTER CLOTH ADJOIN EACH OTHER, THEY SHALL BE OVERLAPPED BY 6 INCHES, FOLDED AND STAPLED.
6. FENCE POSTS SHALL BE A MINIMUM OF 36 INCHES LONG AND DRIVEN A MINIMUM OF 16 INCHES INTO THE GROUND. WOOD POSTS SHALL BE OF SOUND QUALITY HARDWOOD AND SHALL HAVE A MINIMUM CROSS SECTIONAL AREA OF 3.0 SQUARE INCHES.
7. MAINTENANCE SHALL BE PERFORMED AS NEEDED AND MATERIAL REMOVED WHEN "BULGES" DEVELOP IN THE SILT FENCE.

MAINTENANCE NOTES:
1. SILT FENCES SHALL BE INSPECTED IMMEDIATELY AFTER EACH RAINFALL AND AT LEAST DAILY DURING PROLONGED RAINFALL. ANY REPAIRS THAT ARE REQUIRED SHALL BE MADE IMMEDIATELY.
2. IF THE FABRIC ON A SILT FENCE SHOULD DECOMPOSE OR BECOME INEFFECTIVE DURING THE EXPECTED LIFE OF THE FENCE, THE FABRIC SHALL BE REPLACED PROMPTLY.
3. SEDIMENT DEPOSITS SHOULD BE INSPECTED AFTER EVERY STORM EVENT. THE DEPOSITS SHOULD BE REMOVED WHEN THEY REACH APPROXIMATELY ONE-HALF THE HEIGHT OF THE BARRIER.
4. SEDIMENT DEPOSITS THAT ARE REMOVED OR LEFT IN PLACE AFTER THE FABRIC HAS BEEN REMOVED SHALL BE GRADED TO CONFORM WITH THE EXISTING TOPOGRAPHY AND VEGETATED.

SILT FENCE DETAIL

NOT TO SCALE

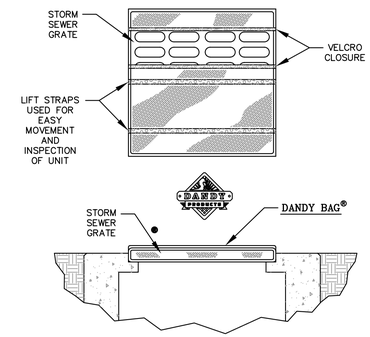

HI-FLOW DANDY BAG® (SAFETY ORANGE)

Mechanical Properties	Test Method	Units	MARV
Grab Tensile Strength	ASTM D 4632	kN (lbs)	1.62 (365) X 0.89 (200)
Grab Tensile Elongation	ASTM D 4632	%	24 X 10
Puncture Strength	ASTM D 4833	kN (lbs)	0.40 (90)
Mullen Burst Strength	ASTM D 3786	kPa (psi)	3097 (450)
Trapezoid Tear Strength	ASTM D 4533	kN (lbs)	0.51 (115) X 0.33 (75)
UV Resistence	ASTM D 4355	%	90
Apparent Opening Size	ASTM D 4751	Mm (US Std Sieve)	0.425 (40)
Flow Rate	ASTM D 4491	$l/min/m^2$ ($gal/min/ft^2$)	5907 (145)
Permittivity	ASTM D 4491	Sec^{-1}	2.1

*Note: All Dandy Bags® can be ordered with our optional oil absorbent pillows

DANDY BAG DETAIL

NOT TO SCALE

1. EARTHWORK SHALL BE LIMITED TO THE AREAS WITHIN THE LIMITS OF CLEARING AS SHOWN ON THE PLAN. NO GIVEN AREA OF THE SITE SHALL BE LEFT IN AN UNSTABILIZED CONDITION FOR A PERIOD OF TIME EXCEEDING THIRTY (30) CALENDAR DAYS.
2. THE SMALLEST PRACTICAL AREA SHALL BE DISTURBED DURING CONSTRUCTION.
3. PERIMETER CONTROLS MUST BE INSTALLED PRIOR TO EARTHWORK.
4. EROSION CONTROL MEASURES USED SHALL BE INSPECTED AT LEAST WEEKLY AND WITHIN 24 HOURS AFTER 0.25" OF RAINFALL OR MORE. ALL DEFICIENCIES SHALL BE FIXED IN ORDER TO KEEP OPERATION EFFECTIVE. THEY SHALL BE CLEANED AND MAINTAINED AND OTHERWISE KEPT IN AN EFFECTIVE OPERATING MANNER THROUGHOUT THE CONSTRUCTION PERIOD.
5. ALL STORMWATER PRACTICES AND DRAINAGE SWALES ARE TO BE INSTALLED PRIOR TO ROUGH GRADING OF THE SITE. THEY SHOULD BE FULLY STABILIZED PRIOR TO RECEIVING STORMWATER. PERIODIC INSPECTION AND MAINTENANCE TO MAINTAIN DESIGN INTENT IS REQUIRED.
6. ALL DISTURBED AREAS DESIGNATED TO BE TURF, SHALL RECEIVE THE REQUIRED AMOUNT OF LOAM (COMPACTED THICKNESS), PRIOR TO FINAL SEEDING AND MULCHING.
7. IF DURING CONSTRUCTION A WINTER SHUTDOWN IS NECESSARY, THE CONTRACTOR SHALL STABILIZE ALL INCOMPLETE WORK AND PROVIDE FOR SUITABLE METHODS OF DIVERTING RUNOFF IN ORDER TO ELIMINATE SHEET FLOW ACROSS FROZEN SURFACES.
8. AN AREA SHALL BE CONSIDERED STABLE IF ONE OF THE FOLLOWING HAS OCCURRED:
   A. BASE COURSE GRAVELS ARE INSTALLED IN AREAS TO BE PAVED;
   B. A MINIMUM OF 85% VEGETATED GROWTH HAS BEEN ESTABLISHED;
   C. A MINIMUM OF 3" OF NON-EROSIVE MATERIAL SUCH AS STONE OR RIP RAP HAS BEEN INSTALLED; OR
   D. EROSION CONTROL BLANKETS HAVE BEEN PROPERLY INSTALLED.
8. ALL DUST SHALL BE CONTROLLED BY THE USE OF WATER IN ACCORDANCE WITH ENV-A 1000.
9. IF, DURING CONSTRUCTION, IT BECOMES APPARENT THAT ADDITIONAL EROSION AND SEDIMENT CONTROL DEVICES ARE REQUIRED, THE OWNER SHALL BE REQUIRED TO INSTALL THE NECESSARY DEVICES OR CONSULT WITH THE ENGINEER.
10. JUTE MATTING INSTALLED TO CONFORM WITH THE RECOMMENDED BEST MANAGEMENT PRACTICE OUTLINED IN "NEW HAMPSHIRE EROSION AND SEDIMENT CONTROL GUIDELINES FOR URBAN AND SUBURBAN AREAS" ON ALL 3:1 SLOPES OR GREATER.
11. ALL ROADWAYS AND PARKING AREAS SHALL BE STABILIZED WITHIN 72 HOURS.
12. ALL CUT AND FILL SLOPES SHALL BE SEEDED AND MULCHED WITHIN 72 HOURS.

EROSION CONTROL NOTES

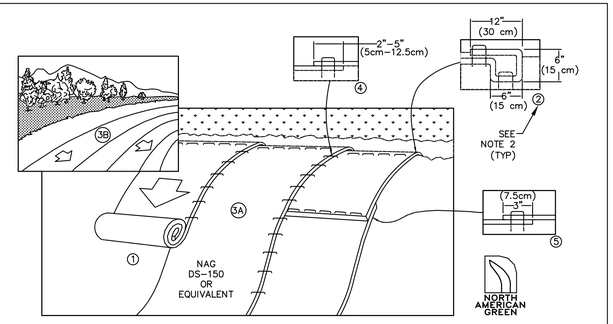

NOTES:
1. PREPARE SOIL BEFORE INSTALLING BLANKETS, INCLUDING ANY NECESSARY APPLICATION OF LIME, FERTILIZER, AND SEED.
2. BEGIN AT THE TOP OF THE SLOPE BY ANCHORING THE BLANKET IN A 6" (15cm) DEEP X 6" (15cm) WIDE TRENCH WITH APPROXIMATELY 12" (30cm) OF BLANKET EXTENDED BEYOND THE UP-SLOPE PORTION OF THE TRENCH. ANCHOR THE BLANKET WITH A ROW OF STAPLES/STAKES APPROXIMATELY 12" (30cm) APART IN THE BOTTOM OF THE TRENCH. BACKFILL AND COMPACT THE TRENCH AFTER STAPLING. APPLY SEED TO COMPACTED SOIL AND FOLD REMAINING 12" (30cm) PORTION OF BLANKET BACK OVER SEED AND COMPACTED SOIL. SECURE BLANKET OVER COMPACTED SOIL WITH A ROW OF STAPLES/STAKES SPACED APPROXIMATELY 12" (30cm) APART ACROSS THE WIDTH OF THE BLANKET.
3. ROLL THE BLANKETS (A) DOWN or (B) HORIZONTALLY ACROSS THE SLOPE. BLANKETS WILL UNROLL WITH APPROPRIATE SIDE AGAINST THE SOIL SURFACE. ALL BLANKETS MUST BE SECURELY FASTENED TO SOIL SURFACE BY PLACING STAPLES/ STAKES IN APPROPRIATE LOCATIONS AS SHOWN IN THE STAPLE PATTERN GUIDE. WHEN USING OPTIONAL DOT SYSTEM,STAPLES/STAKES SHOULD BE PLACED THROUGH EACH OF THE COLORED DOTS CORRESPONDING TO THE APPROPRIATE STAPLE PATTERN.
4. THE EDGES OF PARALLEL BLANKETS MUST BE STAPLED WITH APPROXIMATELY 2"-5" (5cm-12.5cm) OVERLAP DEPENDING ON BLANKET TYPE. TO ENSURE PROPER SEAM ALIGNMENT, PLACE THE EDGE OF THE OVERLAPPING BLANKET (BLANKET BEING INSTALLED ON TOP) EVEN WITH THE COLORED SEAM STITCH ON THE PREVIOUSLY INSTALLED BLANKET.
5. CONSECUTIVE BLANKETS SPLICED DOWN THE SLOPE MUST BE PLACED END OVER END (SHINGLE STYLE) WITH AN APPROXIMATE 3" (7.5cm) OVERLAP. STAPLE THROUGH OVERLAPPED AREA, APPROXIMATELY 12" (30cm) APART ACROSS ENTIRE BLANKET WIDTH. NOTE: *IN LOOSE SOIL CONDITIONS, THE USE OF STAPLE OR STAKE LENGTHS GREATER THAN 6" (15cm) MAY BE NECESSARY TO PROPERLY SECURE THE BLANKETS.

EROSION CONTROL BLANKET DETAIL

NOT TO SCALE

1. CONTACT DIG SAFE AT LEAST 72 HOURS BEFORE ANY EXCAVATION WORK.
2. INSTALL ALL APPLICABLE TEMPORARY EROSION CONTROL MEASURES PRIOR PRIOR TO COMMENCEMENT OF ANY EARTHMOVING OPERATIONS.
3. NATIVE ORGANIC SOIL MATERIALS SUITABLE FOR USE AS TOPSOIL SHALL BE STOCKPILED WITHIN AREAS OUT OF THE WAY OF OTHER CONSTRUCTIONS ACTIVITIES AND DRAINAGE FLOW. STOCKPILES SHALL BE TEMPORARILY SEEDED WITH WINTER RYE AND BE SURROUNDED BY PERIMETER CONTROLS TO PREVENT EROSION.
4. COMMENCE EARTHWORK OPERATIONS. ALL PERMANENT EROSION CONTROL MEASURES SHOULD BE INSTALLED PRIOR TO GRADING FOR PROJECT.
5. ALL DRAINAGE SYSTEMS AND OTHER UTILITIES SHOULD BE CONSTRUCTED FROM LOW GRADE TO HIGH GRADE. INCOMPLETE WORK SHALL BE PROTECTED FROM SILTATION BY THE USE OF PERIMETER CONTROLS UNTIL THE SITE HAS BECOME FULLY STABILIZED.
6. AN AREA SHALL BE CONSIDERED STABLE IF ONE OF THE FOLLOWING HAS OCCURRED:
   A. BASE COURSE GRAVELS ARE INSTALLED IN AREAS TO BE PAVED;
   B. A MINIMUM OF 85% VEGETATED GROWTH HAS BEEN ESTABLISHED;
   C. A MINIMUM OF 3" OF NON-EROSIVE MATERIAL SUCH AS STONE OR RIP RAP HAS BEEN INSTALLED; OR EROSION CONTROL BLANKETS HAVE BEEN PROPERLY INSTALLED.
8. IF, DURING CONSTRUCTION, IT BECOMES APPARENT THAT ADDITIONAL EROSION AND SEDIMENT CONTROL DEVICES ARE REQUIRED, THE OWNER SHALL BE REQUIRED TO INSTALL THE NECESSARY DEVICES OR CONSULT WITH THE ENGINEER.
9. ALL STORMWATER FLOWS SHALL NOT BE DIRECTED TO THE STORMWATER MEASURES UNTIL ALL CONTRIBUTING AREA HAVE BEEN DEEMED STABLE.
10. BEGIN THE CONSTRUCTION OF GRAVEL AND CRUSHED GRAVEL COURSES OVER PROPOSED DRIVEWAY, WALKS, AND PARKING AREAS AND COMPACT IN SPECIFIED LIFT THICKNESS AND COMPACTION RATES.
11. COMPLETE GRADING ACTIVITIES AND WHEN COMPLETE, BEGIN TOPSOILING PROPOSED TURF AREAS USING STOCKPILED LOAM SUPPLEMENTED WITH BORROW LOAM, IF NECESSARY, TO LEAVE THE SPECIFIED THICKNESS.
12. FINE GRADE ALL TURF AREAS AND COMPLETE PERMANENT SEEDING AND LANDSCAPING BY HYDROSEEDING WITH THE SPECIFIED SEED MIXTURE IMMEDIATELY AFTER FINE GRADING IS COMPLETED. ALL AREAS SHALL BE STABILIZED WITHIN 72 HOURS OF ACHIEVING FINISH GRADE.
13. INSTALL THE FINAL BINDER COURSE OF PAVEMENT.
14. INSTALL THE FINAL WEARING COURSE OF PAVEMENT OVER THE BINDER COURSE.
15. COMPLETE INSTALLATION OF LANDSCAPING, SIGNAGE, AND OTHER SITE AMENITIES.
16. REMOVE TEMPORARY EROSION CONTROL MEASURES AFTER SEEDED AREAS HAVE ESTABLISHED THEMSELVES.

CONSTRUCTION SEQUENCE

1. ALL PROPOSED POST-DEVELOPMENT VEGETATED AREAS WHICH DO NOT EXHIBIT A MINIMUM OF 85% VEGETATIVE GROWTH BY OCTOBER 15TH, OR WHICH ARE DISTURBED AFTER OCTOBER 15TH, SHALL BE STABILIZED BY SEEDING AND INSTALLING EROSION CONTROL BLANKETS ON SLOPES GREATER THAN 3:1, AND SEEDING AND PLACING 3 TO 4 TONS OF MULCH PER ACRE, SECURED WITH ANCHORED NETTING, ELSEWHERE. THE PLACEMENT OF EROSION CONTROL BLANKETS OR MULCH AND NETTING SHALL NOT BE DONE OVER ACCUMULATED SNOW OR ON FROZEN GROUND AND SHALL BE COMPLETED IN ADVANCE OF THAW OR SPRING MELT EVENTS.
2. ALL DITCHES OR SWALES WHICH DO NOT EXHIBIT A MINIMUM OF 85% VEGETATIVE GROWTH BY OCTOBER 15TH, OR WHICH ARE DISTURBED AFTER OCTOBER 15TH, SHALL BE STABILIZED WITH STONE OR EROSION CONTROL BLANKETS APPROPRIATE FOR THE DESIGN FLOW CONDITIONS.
3. AFTER OCTOBER 15TH, INCOMPLETE ROAD OR PARKING SURFACES SHALL BE PROTECTED WITH A MINIMUM OF 3 INCHES OF CRUSHED GRAVEL (NHDOT 304.3).

WINTER CONSTRUCTION NOTES

GRANITE ENGINEERING
civil engineering
land planning
municipal services

REVISIONS

No.	DATE	COMMENTS	BY

OWNER:
ROMAN CATHOLIC BISHOP OF MANCHESTER
153 ASH STREET
MANCHESTER, NH 03104

APPLICANT:
CURRIER MUSEUM OF ART
150 ASH STREET
MANCHESTER, NH 03104

GRANITE ENGINEERING
civil engineering • land planning • municipal services
250 Commercial Street, Suite 3008
Manchester,
New Hampshire 03101
603.518.8030
www.GraniteEng.com

STAMP:
STEVEN D. PEARSON
NEW HAMPSHIRE
JEFFREY S. MERRITT
No. 11778
LICENSED
PROFESSIONAL ENGINEER
10.05.20

LOCATION:
TAX MAP 18 LOT 23-1
147 WALNUT STREET
MANCHESTER, NEW HAMPSHIRE
HILLSBOROUGH COUNTY

PROJECT:
CHANDLER HOUSE

TITLE:
DETAILS

PROJECT No.	DATE:	SCALE:
20-0731-1	OCTOBER 5, 2020	
SHEET: 9 OF 9		

P:\0\2007311\dwg\Production Plans\2007311 - DETAILS.dwg, LAYOUT, 9/30/2020 4:28:28 PM, jmerritt, Bluebeam PDF, ANSI_D_(22.00_x_34.00_Inches), 1:1