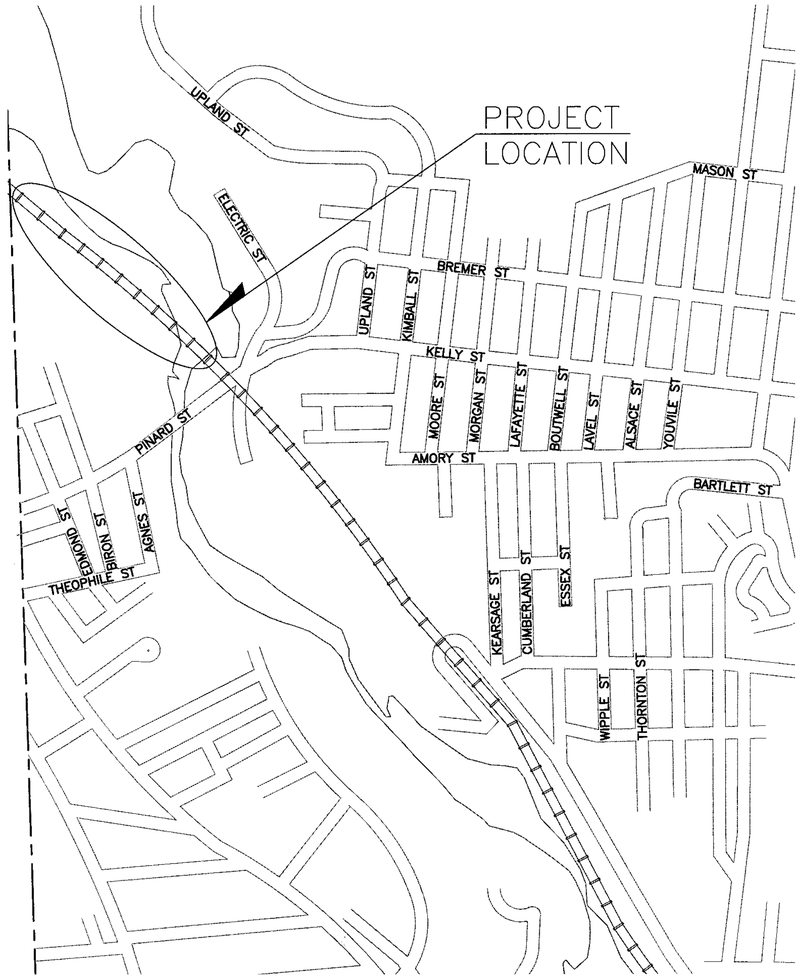

CITY OF MANCHESTER

HILLSBOROUGH COUNTY
NEW HAMPSHIRE
DEPARTMENT OF PUBLIC WORKS - PARKS, RECREATION AND CEMETERIES DIVISION

PISCATAQUOG RIVER TRAIL
PHASE III-A
STATE PROJECT NO. 14412A
FEDERAL RPOJECT NO. X-A000(907)

⚠ RECORD DRAWINGS

I HEREBY CERTIFY THAT TO THE BEST OF MY KNOWLEDGE, BASED UPON CONSTRUCTION RECORDS, THAT ALL WORK SHOWN IN THESE DRAWINGS HAS BEEN COMPLETED AS SHOWN.

HOYLE, TANNER & ASSOCIATES, INC.

SIGNED _____

NOVEMBER 2015

NOTE: WORDING CONTAINED HEREON IS UNDERSTOOD TO BE PAST TENSE.

811 DigSafe MA·ME·NH·RI·VT

CITY OF MANCHESTER · LABOR VINCIT · INCORPORATED JUNE 1846

STATE OF NEW HAMPSHIRE · SEAN T. JAMES No. 10125 · LICENSED · PROFESSIONAL ENGINEER
11/10/2014

⚠ BRIDGE SUPERSTRUCTURE SHOP DRAWINGS

SHEET NO.	DESCRIPTION
T001	TITLE PAGE
T002	GENERAL NOTES
T003	BEARING REACTION & ANCHOR BOLT LAYOUT
S101	ELEVATION & PLAN VIEW
S102	CROSS SECTION
S103	BEARING ELEVATION
S104	BEARING DETAIL
S105	SPLICE DETAIL

⚠ MSE RETAINING WALL SHOP DRAWINGS

SHEET NO.	DESCRIPTION
S1.0	REDIROCK WALL DESIGN DRAWING (1 OF 2)
S1.0	REDIROCK WALL DESIGN DRAWING (2 OF 2)

LEGEND

EXISTING	PROPOSED	DESCRIPTION	EXISTING	PROPOSED	DESCRIPTION
		PROPERTY LINE			CHAINLINK FENCE
		EASEMENT			SPLIT RAIL FENCE (ITEM 606.003)
		IRON ROD			TIMBER GUARDRAIL (ITEM 606.002)
		CONTROL POINT			RETAINING WALL
5+00	5+00	CONSTRUCTION BASE LINE	SF	SF	SILT FENCE
DW	DW	DELINEATED WETLANDS	97	97	MINOR CONTOUR
		EDGE OF RIVER	100	100	MAJOR CONTOUR
			×97.5	×97.5	SPOT ELEVATION
		EDGE OF GRAVEL			DRAIN
		EDGE OF PAVEMENT	S	S	SEWER
VGC	VGC	VERTICAL GRANITE CURB	W	W	WATER
		BOLLARD			CATCH BASIN
		SIGN	S	S	SEWER MANHOLE
		DOUBLE SIGN	W	W	WATER MANHOLE
		GUARDRAIL			UTILITY POLE
		TREELINE			GUY POLE
		TREE			

INDEX OF SHEETS

SHEET NO.	DESCRIPTION	SHEET NO.	DESCRIPTION
1	TITLE SHEET	20	ABUTMENT MASONRY AND REINFORCING DETAILS
2	NOTES AND QUANTITIES (1 OF 2)	21	BRIDGE SECTION AND DETAILS
3	NOTES AND QUANTITIES (2 OF 2)	22	RETAINING WALL DETAILS
4	EXISTING CONDITIONS PLAN	23	RETAINING WALL ELEVATIONS (1 OF 2)
5	TYPICAL TRAIL SECTIONS	24	RETAINING WALL ELEVATIONS (2 OF 2)
6	TRAIL DETAILS SHEET	25	CROSS SECTIONS (1 OF 3)
7	TRAIL PLAN AND PROFILE (1 OF 3)	26	CROSS SECTIONS (2 OF 3)
8	TRAIL PLAN AND PROFILE (2 OF 3)	27	CROSS SECTIONS (3 OF 3)
9	TRAIL PLAN AND PROFILE (3 OF 3)		
10	PAVEMENT REPLACEMENT DETAIL		
11	EXISTING AND PROPOSED CROSSWALK DETAILS		
12	SITE PLAN (1 OF 3)		
13	SITE PLAN (2 OF 3)		
14	SITE PLAN (3 OF 3)		
15	RECOMMENDED BRIDGE CONSTRUCTION SEQUENCE (1 OF 2)		
16	RECOMMENDED BRIDGE CONSTRUCTION SEQUENCE (2 OF 2)		
17	BRIDGE GENERAL PLAN AND ELEVATION		
18	ABUTMENT A PLAN AND ELEVATION		
19	ABUTMENT B PLAN AND ELEVATION		

Hoyle, Tanner Associates, Inc.

150 Dow Street, Manchester, NH 03101-1227
Tel (603) 669-5555 · Fax (603) 669-4168
Webpage: www.hoyletanner.com

GENERAL NOTES

(1) GENERAL NOTES SHALL APPLY TO ALL DRAWINGS PREPARED BY HOYLE, TANNER & ASSOCIATES (HOYLE, TANNER) AND THE WORK THEY CONVEY.

(2) ALL WORK SHALL CONFORM TO ALL FEDERAL, STATE AND LOCAL CODES, REGULATIONS AND STANDARDS, THE MORE STRINGENT SHALL GOVERN.

(3) THE GENERAL CONTRACTOR SHALL SUPERVISE AND DIRECT THE WORK AND SHALL BE SOLELY RESPONSIBLE FOR ALL CONSTRUCTION MEANS, METHODS AND COORDINATION OF OTHER TRADES.

(4) THESE DOCUMENTS DO NOT INCLUDE THE NECESSARY COMPONENTS FOR CONSTRUCTION SAFETY. CARE OF ADJACENT PROPERTIES DURING CONSTRUCTION AND COMPLIANCE WITH STATE AND FEDERAL REGULATIONS REGARDING SITE SAFETY SHALL SOLELY BE THE CONTRACTORS RESPONSIBILITY.

(5) ALL DIMENSIONS, ELEVATIONS AND CONDITIONS MUST BE VERIFIED BY THE GENERAL CONTRACTOR OR RESPONSIBLE TRADES PRIOR TO COMMENCING WITH THE WORK, FABRICATION OR ORDERING MATERIALS. DO NOT SCALE DRAWINGS, USE DIMENSIONS SHOWN.

(6) ANY DISCREPANCIES BETWEEN THESE DRAWINGS AND AS-BUILT CONDITIONS SHALL BE BROUGHT TO THE ATTENTION OF THE ENGINEER IMMEDIATELY PRIOR TO PROCEEDING WITH THE WORK.

(7) THE INFORMATION SHOWN ON THESE PLANS CONCERNING THE TYPE AND LOCATION OF UNDERGROUND UTILITIES IS NOT GUARANTEED TO BE ACCURATE OR ALL INCLUSIVE. THE CONTRACTOR IS RESPONSIBLE FOR MAKING HIS OWN DETERMINATIONS AS TO THE TYPE AND LOCATION OF UNDERGROUND UTILITIES AS MAY BE NECESSARY TO AVOID DAMAGE THERETO.

(8) ALL APPLICABLE UTILITY DEPARTMENTS AND COMPANIES SHALL BE NOTIFIED BEFORE EXCAVATION IS STARTED. UTILITIES WITHIN 50 FEET OF AN EXCAVATION SHALL BE MARKED IN THE FIELD.

(9) HOYLE, TANNER & ASSOCIATES, INC. WAIVES ANY AND ALL RESPONSIBILITY AND LIABILITY FOR PROBLEMS THAT ARISE DUE TO THE FAILURE OF THE CONTRACTOR:
* TO FOLLOW THESE DRAWINGS AND SPECIFICATIONS AND THE DESIGN INTENT THEY CONVEY.
* TO NOTIFY HOYLE, TANNER OF ANY DISCREPANCIES, ERRORS, OMISSIONS OR CONFLICTS AND OBTAIN THEIR GUIDANCE TO RESOLVE.

GENERAL CONSTRUCTION NOTES

(1) FOR EXISTING CONDITIONS PLAN, SEE SHEET 4.

(2) DIMENSIONS, ANGLES, BEARINGS AND ELEVATIONS SHOWN ON THESE CONTRACT PLANS HAVE BEEN OBTAINED FROM LIMITED FIELD INVESTIGATIONS AND SURVEY, AND MAY NOT ACCURATELY REFLECT ACTUAL FIELD CONDITIONS. ACCORDINGLY, THE CONTRACTOR SHALL BE RESPONSIBLE FOR MAKING FIELD MEASUREMENTS OF ALL EXISTING STRUCTURE COMPONENTS IMPACTED BY THE PROPOSED WORK TO ASSURE CONSISTENCY WITH THE PROPOSED MODIFICATIONS. ANY DISCREPANCIES IN DIMENSIONS, CHARACTER OR EXTENT OF THE EXISTING FEATURES SHALL BE BROUGHT TO THE ATTENTION OF THE ENGINEER BEFORE ADVANCING THE WORK.

(3) THE CONTRACTOR SHALL PROTECT ALL EXISTING UTILITIES FROM DAMAGE DURING CONSTRUCTION.

(4) WATER LEVEL MAY VARY FROM THAT SHOWN.

(5) CENTERLINE OF BEARING STATIONS, TOP OF LEVELING PAD ELEVATIONS AND SPAN MAY BE ADJUSTED TO SUIT ALTERNATE BRIDGE GEOMETRY AND SITE CONDITIONS.

DESIGN LOADS, MATERIALS AND SPECIFICATIONS

(1) DESIGN LIVE LOAD:	90 PSF PEDESTRIAN LOAD AND H5 TRUCK
(2) DESIGN SAFETY RAIL LOAD:	50 PLF IN COMBINATION WITH 200 LB CONCENTRATED LOAD
(3) DESIGN METHOD:	LOAD AND RESISTANCE FACTOR DESIGN METHOD (LRFD)
(4) DESIGN SPECIFICATIONS:	AASHTO LRFD BRIDGE DESIGN SPECIFICATIONS, 6TH EDITION WITH LATEST INTERIMS REVISIONS (2013). AASHTO LRFD GUIDE SPECIFICATIONS FOR THE DESIGN OF PEDESTRIAN BRIDGES, DECEMBER 2009 2009 INTERNATIONAL BUILDING CODE WELDING PER ANSI/AASHTO/AWS D1.5-02 (INCLUDING ALL REVISIONS PUBLISHED BY AASHTO AS OF THE BID OPENING DATE)
(5) REINFORCING STEEL:	AASHTO M 284 (ASTM A775) GRADE 60 EPOXY COATED
(6) STRUCTURAL STEEL:	AASHTO M 270, GRADE 50W (ASTM A709, GRADE 50W), ASTM A847 (FY = 50 ksi)
(7) CONCRETE:	PROPOSED ABUTMENT = 4000 PSI (CLASS AA)

UTILITY COORDINATION

(1) OVERHEAD UTILITIES ARE PRESENT WITHIN THE PROJECT SITE. THE CONTRACTOR SHALL BE FAMILIAR AND TAKE NECESSARY PRECAUTIONS WITH THESE UTILITIES DURING CONSTRUCTION. CONTRACTOR SHALL COORDINATE TEMPORARY RELOCATIONS; SHIELDING NECESSARY FOR EQUIPMENT MOBILIZATION (SUCH AS CRANE TO INSTALL THE ENGINEERED PEDESTRIAN BRIDGE) AND TEMPORARY DISCONNECTION OF POWER WITH THE UTILITY OWNERS IF REQUIRED. ALL COST FOR THIS COORDINATION SHALL BE INCLUDED IN ITEM 692, MOBILIZATION. ALL COSTS ASSOCIATED WITH MISCELLANEOUS TREE TRIMMING & CLEARING FOR TEMPORARY UTILITY RELOCATIONS SHALL BE SUBSIDIARY TO THE CONTRACT.

OVERHEAD UTILITY OWNER INFORMATION:

PUBLIC SERVICE OF NEW HAMPSHIRE (PSNH)
PHONE: 800-662-7764

FAIRPOINT COMMUNICATIONS
PHONE: 603-645-2700

COMCAST
PHONE: 603-626-9900

DAM OPERATOR
ENEL GREEN POWER NORTH AMERICA, INC.
PHONE: 978-681-7727

(2) UNDERGROUND SEWER AND WATER UTILITIES ARE PRESENT WITHIN THE PROJECT SITE. THE CONTRACTOR SHALL BE FAMILIAR AND TAKE NECESSARY PRECAUTIONS WITH THESE UTILITIES DURING CONSTRUCTION. ALL UNDERGROUND UTILITY WORK SHALL BE COORDINATED WITH THE CITY OF MANCHESTER.

UNDERGROUND UTILITY OWNER INFORMATION:
CITY OF MANCHESTER
ENVIRONMENTAL PROTECTION DIVISION
PHONE: 603-624-6595

TOPOGRAPHIC SURVEY NOTES

(1) THE SURVEY FOR THIS PROJECT WAS COMPLETED BY:
SANFORD SURVEYING AND ENGINEERING
567 NEW BOSTON RD, BEDFORD, NH N3110
(603) 472-2265
ALL ELEVATIONS SHOWN ON THESE DRAWINGS ARE IN NAVD88 VERTICAL DATUM.
TO CONVERT TO NGVD29 VERTICAL DATUM ADD 0.699 FT.

(2) THE SURVEY CONSISTED OF 1 SHEET TITLED:
PISCATAQUOG RIVER/TRAIL TRESTLE OVER PISCATAQUOG RIVER

(3) WETLAND RESOURCES WITHIN THE SURVEY AREA WERE DELINEATED BY:
CHRISTOPHER K. DANFORTH C.W.S. NUMBER 77

MOBILIZATION AREAS NOTES

(1) PRIOR TO COMMENCEMENT OF CONSTRUCTION, THE CONTRACTOR SHALL LAYOUT LIMITS OF ALL EASEMENTS AND CITY'S RIGHT-OF-WAY WITHIN THE PROJECT LIMITS. COST IS INCLUDED UNDER ITEM 692, MOBILIZATION. LAYOUT SHALL BE PERFORMED BY A LAND SURVEYOR LICENSED IN THE STATE OF NEW HAMPSHIRE. SEE SPECIFICATIONS FOR ADDITIONAL INFORMATION.

(2) THE CONTRACTOR SHALL BE LIMITED TO MOBILIZATION WITHIN THE CITY'S RIGHT-OF-WAY AND EASEMENTS LIMITS SHOWN IN THESE PLANS, UNLESS NOTED OTHERWISE. ADDITIONAL MOBILIZATION AREAS REQUIRED BY THE CONTRACTOR SHALL BE COORDINATED BY THE CONTRACTOR WITH THE AFFECTED PROPERTY OWNERS AND SHALL BE AT THE CONTRACTOR'S EXPENSE.

EASEMENT NOTE:

(3) THE CITY OF MANCHESTER HAS OBTAINED A 30' WIDE TRAIL EASEMENT FROM STA 4+50 TO STA 14+80.00.

SUPERSTRUCTURE NOTES

(1) ITEM 569.5, ENGINEERED PEDESTRIAN BRIDGE SUPERSTRUCTURE, SHALL INCLUDE, IN ADDITION TO THE STRUCTURE, TIMBER DECK, BEARING DEVICES, ANCHOR RODS, HANDRAILS AND ALL OTHER INCIDENTAL ITEMS OR ITEMS SHOWN IN THE CONTRACT DOCUMENTS NECESSARY TO COMPLETE THE DESIGN AND CONSTRUCTION OF THE PROPOSED BRIDGE SUPERSTRUCTURE.

(2) THE PROPOSED BRIDGE SHALL BE A SINGLE SPAN.

(3) THE CONTRACTOR SHALL SUBMIT TO THE ENGINEER FOR APPROVAL, DESIGN CALCULATIONS AND SHOP DRAWINGS FOR THE PREFABRICATED PEDESTRIAN BRIDGE, INCLUDING TRUSSES, FLOOR BEAMS, BRACING, TIMBER DECK, BEARINGS AND ANCHOR BOLTS. SHOP DRAWINGS AND CALCULATIONS SHALL BE SIGNED AND SEALED BY A PROFESSIONAL ENGINEER LICENSED IN THE STATE OF NEW HAMPSHIRE. THE MANUFACTURER SHALL BE RESPONSIBLE FOR THE DESIGN OF THE PREFABRICATED BRIDGE STRUCTURE. SEE SPECIAL PROVISION FOR ITEM 569.5.

(4) BEARING DEVICES AND ANCHOR BOLT LAYOUT SHALL BE SPECIFIED BY THE BRIDGE FABRICATOR AND COORDINATED WITH THE CONTRACTOR. ONE (1) END OF THE BRIDGE SHALL BE FITTED WITH A BEARING CAPABLE OF ACCOMMODATING THE FULL EXPANSION AND CONTRACTION TEMPERATURE DIFFERENTIALS IN ACCORDANCE WITH AASHTO.

(5) ALL STRUCTURAL STEEL SHALL CONFORM TO AASHTO M270, GRADE 50W (WEATHERING) (ASTM A709, GRADE 50W), ASTM A847 (FY=50 KSI).

(6) TIMBER DECK SHALL BE PRESSURE TREATED SOUTHERN PINE NO. 1, OR BETTER WITH A MINIMUM NOMINAL WIDTH OF 8".

(7) ALL BOLTED FIELD CONNECTIONS SHALL BE MADE WITH 7/8"ø (MIN.) HIGH STRENGTH BOLTS AASHTO M164 (ASTM A325) TYPE 3 PLACED IN 15/16"ø HOLES.

(8) BRIDGE SHALL BE CAMBERED 2'-0" (MIN.) AT MIDSPAN FOR THE EFFECTS OF VERTICAL CURVATURE AFTER FULL DEAD LOAD DEFLECTION HAS OCCURRED.

(9) SHOP OR FIELD WELDING OF ATTACHMENTS TO, OR PLACEMENT OF HOLES IN ANY EXPOSED PORTION OF THE BRIDGE FOR CONSTRUCTION PURPOSES, IS NOT PERMITTED.

(10) DIRECT TENSION INDICATOR WASHERS SHALL BE INSTALLED WITH HIGH STRENGTH BOLTS.

(11) THE NOTCH TOUGHNESS REQUIREMENTS OF NHDOT STANDARD SPECIFICATIONS SECTION 550.2.2.3 SHALL APPLY.

(12) ALL WELDING AND FABRICATION SHALL BE PERFORMED IN ACCORDANCE WITH THE ANSI/AASHTO/AWS DI.5-02 BRIDGE WELDING CODE AND THE NHDOT STANDARD SPECIFICATIONS FOR ROAD AND BRIDGE CONSTRUCTION.

(13) ALL HARDWARE EXCLUDING THE HIGH-STRENGTH BOLTED CONNECTIONS, SHALL BE HOT-DIPPED GALVANIZED IN ACCORDANCE WITH AASHTO M232. ELECTROPLATED HARDWARE SHALL NOT BE PERMITTED.

(14) THE CONTRACTOR SHALL SUBMIT THE METHOD OF BRIDGE ERECTION AND TRESTLE REMOVAL FOR APPROVAL BY THE ENGINEER. THE SUBMITTAL SHALL INCLUDE DETAILS, PLANS AND CALCULATIONS FOR EQUIPMENT LOCATIONS, SIZE AND WEIGHTS. THE SUBMITTAL SHALL ALSO INCLUDE CALCULATIONS FOR THE EXISTING TRESTLE (IF UTILIZED) OR ANY OTHER REQUIRED TEMPORARY MEASURES FOR BRIDGE ERECTION.

(15) PROPOSED ABUTMENT ELEVATIONS ARE PROVIDED FOR BIDDING PURPOSES ONLY AND WERE DERIVED FROM PRELIMINARY SUPERSTRUCTURE DESIGN. IT IS THE RESPONSIBILITY OF THE CONTRACTOR TO VERIFY ACTUAL SUBSTRUCTURE ELEVATIONS PRIOR TO COMMENCING WITH THE WORK.

EXISTING BRIDGE REMOVAL NOTES

(1) SEE SHEET 15 AND 16 FOR RECOMMENDED CONSTRUCTION SEQUENCE. THE CONTRACTOR'S METHOD OF REMOVAL OF THE EXISTING BRIDGE SUPERSTRUCTURE AND PORTIONS OF THE EXISTING STONE MASONRY ABUTMENTS SHALL BE SUBMITTED IN ACCORDANCE WITH SECTION 502 PRIOR TO THE COMMENCEMENT OF ANY REMOVAL OPERATIONS.

(2) REMOVAL OF EXISTING BRIDGE STRUCTURE, ITEM 502, SHALL INCLUDE REMOVAL OF THE EXISTING SUPERSTRUCTURE, CHAIN LINK FENCE AND ATTACHMENTS, AND THE REMOVAL OF THE EXISTING ABUTMENT STONES AS INDICATED ON THESE PLANS. SALVAGE STONES AND TRESTLE STEEL BEAMS TO THE CITY OF MANCHESTER. ALL OTHER SALVAGED MATERIAL SHALL BE PROPERLY DISPOSED OF BY THE CONTRACTOR.

(3) THE CONTRACTOR SHALL TAKE SPECIAL CARE TO ENSURE THAT NO DEBRIS FALLS INTO THE PISCATAQUOG RIVER DURING CONSTRUCTION OPERATIONS. THE ERECTION, MAINTENANCE AND REMOVAL OF TEMPORARY STRUCTURES OR OTHER METHODS TO PREVENT DEBRIS FROM FALLING INTO THE RIVER, AND THE CONTRACTOR'S METHOD OF REMOVAL SHALL BE SUBMITTED IN ACCORDANCE WITH SECTION 502 TO THE ENGINEER FOR REVIEW AND APPROVAL. ALL COSTS SHALL BE INCLUDED IN ITEM 502.

I HEREBY CERTIFY THAT TO THE BEST OF MY KNOWLEDGE, BASED UPON CONSTRUCTION RECORDS, THAT ALL WORK SHOWN IN THESE DRAWINGS HAS BEEN COMPLETED AS SHOWN.

HOYLE, TANNER & ASSOCIATES, INC.

SIGNED _____ NOVEMBER 2015

NOTE: WORDING CONTAINED HEREON IS UNDERSTOOD TO BE PAST TENSE.

REV.	DESCRIPTION	DRW BY	CHKD BY	DATE

This document is prepared as an instrument of service and shall remain the property of Hoyle, Tanner. It may not be used, reproduced, disseminated or transferred in any manner, including electronically, for any other purpose than this project, without the written permission of Hoyle, Tanner.

DECEMBER 2014

DESIGN BY: JCR
DRAWN BY: PBD / TAG
CHKD. BY: STJ
SCALE: AS SHOWN

Hoyle, Tanner & Associates, Inc.
150 Dow Street, Manchester, NH 03101-1227
Tel (603) 669-5555 · Fax (603) 669-4168
Webpage: www.hoyletanner.com

CITY OF MANCHESTER
MANCHESTER, NEW HAMPSHIRE

PISCATAQUOG RIVER TRAIL PHASE III-A

NOTES AND QUANTITIES (1 OF 2)

PROJECT NO.: 093143
FILE NAME:
LAYOUT NAME: AB093143NTS1

SHEET NO.
2

ABUTMENT NOTES

(1) ALL EXPOSED EDGES OF NEW CONCRETE SHALL BE CHAMFERED ¾".

(2) ALL CONCRETE SHALL BE PAID AS ITEM 520.01, CONCRETE CLASS AA.

(3) ITEM 538.2 BARRIER MEMBRANE, VERTICAL SURFACES (F), SHALL BE PLACED OVER THE BACKFILL SIDE OF THE CONSTRUCTION JOINTS, 1'–0" ABOVE AND BELOW THE JOINT.

(4) ITEM 534.3 WATER REPELLENT (SILANE/SILOXANE), SHALL BE APPLIED TO ALL EXPOSED SURFACES ON BOTH ABUTMENTS AND WINGWALLS TO 1'–0" BELOW THE PROPOSED FILL LINE.

(5) ABUTMENT AND WINGWALL REINFORCING SHALL HAVE 2½" MINIMUM CLEAR COVER, UNLESS OTHERWISE NOTED. REINFORCING IN THE FOOTINGS SHALL HAVE 3" MINIMUM CLEAR COVER.

(6) REINFORCING STEEL SHALL CONFORM TO AASHTO M 224 (ASTM A775) GRADE 60 EPOXY–COATED.

(7) ALL REINFORCING STEEL SHALL HAVE A MINIMUM LAP SPLICE LENGTH OF 1'–6" UNLESS OTHERWISE INDICATED.

(8) THE CONTRACTOR SHALL SUBMIT DETAILED REINFORCING STEEL SHOP DRAWINGS TO THE ENGINEER FOR REVIEW AND APPROVAL PRIOR TO REINFORCING STEEL FABRICATION. ALL COSTS INCLUDED IN ITEM 544.31.

TIMBER RAIL NOTES

(1) ITEM 606.002, TIMBER GUARDRAIL AND ITEM 606.003, SPLIT RAIL FENCE SHALL INCLUDE POSTS, RAILS, ALL EXCAVATION AND BACKFILL AND ALL CONNECTIONS.

(2) ALL TIMBER FOR ITEM 606.002, TIMBER GUARDRAIL SHALL BE SOUTHERN PINE NUMBER 1 OR BETTER. ALL TIMBER FOR ITEM 606.003 SHALL BE WHITE CEDAR.

(3) CONNECTION HARDWARE SHALL CONFORM TO ASTM A307 AND SHALL BE GALVANIZED.

(4) ALL TIMBER RAILS AND POSTS FOR ITEM 606.002 SHALL BE TREATED IN ACCORDANCE WITH NHDOT STANDARD SPECIFICATION SECTION 606 USING A WATER–BORNE PRESERVATIVE TREATMENT. PRESERVATIVE, PRESSURE TREATMENT PROCESSES, MATERIALS AND MINIMUM NET RETENTION OF PRESERVATIVE SHALL CONFORM TO THE REQUIRMENTS OF AASHTO M 133. EXCESSIVE RESIDUAL PRESERVATIVE MATERIAL WILL BE REJECTED. ITEM 606.003, SPLIT RAIL FENCE SHALL BE UNTREATED.

(5) ALL WOOD CONSTRUCTION SHALL COMPLY WITH THE LATEST AASHTO SPECIFICATIONS, THE NATIONAL DESIGN SPECIFICATION (NDS) AND SUPPLEMENT FOR WOOD CONSTRUCTION SPECIFICATIONS.

(6) EACH PIECE OF WOOD OR TIMBER SHALL BE GRADED, BY A RECOGNIZED LUMBER GRADING AGENCY. A CERTIFICATE OF COMPLIANCE SHALL BE SUBMITTED FOR ALL WOOD.

(7) ALL JOB SITE FABRICATION CUTS AND BORINGS OF WOOD TO BE TREATED SHALL HAVE TWO COATS OF COPPER NAPHTHENATE SOLUTION LIBERALLY APPLIED. THE FIELD TREATMENT APPLICATIONS OF PRESERVATIVE SPECIFIED SHALL BE IN ACCORDANCE WITH AWPA STANDARD M4.

(8) RAILS FOR ITEM 606.002 SHALL BE CONTINUOUS OVER A MINIMUM OF TWO (2) POSTS, UNLESS OTHERWISE NOTED/DETAILED. THESE PROVISIONS DO NOT APPLY TO ITEM 606.003.

(9) SHOP DRAWINGS CLEARLY SHOWING ALL DIMENSIONS, ANGLES, REQUIRED CUTS (BOTH SHOP AND FIELD) AS WELL AS A COMPREHENSIVE BILL OF MATERIALS SHALL BE SUBMITTED TO THE ENGINEER FOR APPROVAL PRIOR TO COMMENCEMENT OF WORK.

EARTHWORK AND GRADING PLANS

(1) PROVIDE UNIFORM SLOPE BETWEEN CONTOURS AND/OR SPOT ELEVATIONS.

(2) GENERAL FILL BEYOND PAVED AREAS SHALL BE FREE OF BRUSH RUBBISH, STUMPS, AND STONES LARGER THAN 8". FILL SHALL BE PLACED IN COMPACTED LAYERS NOT TO EXCEED 8" IN THICKNESS. THE DRY DENSITY AFTER COMPACTION SHALL NOT BE LESS THAN 95% OF THE STANDARD PROCTOR TEST AND DONE IN ACCORDANCE WITH THE REQUIREMENTS OF ASTM D698.

(3) AFTER THE AREAS TO BE TOPSOILED HAVE BEEN BROUGHT TO GRADE, THE SUBGRADE SHALL BE LOOSENED BY SCARIFYING TO A DEPTH OF AT LEAST 2" TO ENSURE BONDING OF THE TOPSOIL AND SUBSOIL.

(4) ALL AREAS DISTURBED BY THE CONTRACTOR'S OPERATIONS THAT DO NOT HAVE A SURFACE TREATMENT SPECIFICALLY SPECIFIED SHALL BE RESTORED TO A MINIMUM OF 6–INCHES OF SEEDED TOPSOIL, FERTILIZER, AND MULCH.

(5) FILL OR TOPSOIL SHALL NEITHER BE PLACED NOR COMPACTED WHILE IN A FROZEN OR MUDDY CONDITION OR WHILE SUBGRADE IS FROZEN.

(6) FINISH PAVEMENT SURFACES AND LAWN AREAS SHALL BE FREE OF LOW SPOTS AND PONDING AREAS.

PAVING NOTES

(1) THE BITUMINOUS MIXTURE SHALL BE THOROUGHLY UNIFORMLY COMPACTED BY ROLLING. THE INITIAL ROLLING SHALL BE DONE WITH A STATIC OR VIBRATORY STEEL–DRUM ROLLER. INTERMEDIATE ROLLING SHALL BE DONE BY A PNEUMATIC–TIRED ROLLER. FINAL ROLLING SHALL BE DONE WITH A STATIC–DRUM ROLLER. THE MINIMUM WEIGHT OF STATIC ROLLER SHALL BE 8 TONS.

(2) SUBMIT PAVEMENT MIX DESIGN TO ENGINEER FOR APPROVAL PRIOR TO PAVING. SEE SECTION 401 OF THE NHDOT STANDARD SPECIFICATIONS FOR ADDITIONAL REQUIREMENTS.

(3) THE GRADE OF ASPHALT CEMENT SHALL BE PG 64–28.

(4) COARSE AGGREGATE FOR THE WEARING COURSE MIX SHALL CONFORM TO ⅜" WEARING MIX AS SPECIFIED IN THE NHDOT STANDARD SPECIFICATIONS SECTION 401 TABLE 2.

SUMMARY OF QUANTITIES △1

ITEM NO	ITEM DESCRIPTION	Quantity Unit	Quantity Amount	
201.1	CLEARING AND GRUBBING (F)	A	0.5	
202.31	FILL ABANDONED PIPE	CY	~~2~~	1.5
202.32	FILL AND ABANDON STRUCTURE	CY	~~3~~	.5
203.1	COMMON EXCAVATION	CY	~~140~~	130.5
209.201	GRANULAR BACKFILL (BRIDGE) (F)	CY	18	
214	FINE GRADING	U	1	
304.1	SAND (F)	CY	~~10~~	31
304.2	GRAVEL (F)	CY	55	
304.3	CRUSHED GRAVEL (F)	CY	40	
304.31	CRUSHED GRAVEL FOR SHIMMING	CY	~~290~~	241.4
403.11	HOT BITUMINOUS PAVEMENT, MACHINE METHOD	TON	~~290~~	246
417	COLD PLANING BITUMINOUS SURFACES	SY	55	
502	REMOVAL OF EXISTING BRIDGE STRUCTURE	U	1	
520.01	CONCRETE CLASS AA	CY	~~23~~	22.6
534.3	WATER REPELLENT (SILANE/ SILOXANE)	GAL	11	
538.2	BARRIER MEMBRANE, PEEL AND STICK - VERTICAL SURFACES (F)	SY	15	
544.31	REINFORCING STEEL, EPOXY COATED (CONTRACTOR DETAILED)	LB	~~2400~~	2385
569.5	ENGINEERED PEDESTRIAN BRIDGE SUPERSTRUCTURE	U	1	
585.3	STONE FILL, CLASS C	CY	5	
585.4	STONE FILL, CLASS D	CY	40	
592.1	MECHANICALLY STABILIZED EARTH RETAINING WALL	SF	1575	
603.80215	15" PLASTIC PIPE (SMOOTH INTERIOR)	LF	~~27~~	23.8
604.12	CATCH BASINS TYPE B	U	1	
606.001	STEEL PIPE BOLLARD	EA	12	
606.002	TIMBER GUARDRAIL	LF	~~420~~	415
606.003	SPLIT RAIL FENCE	LF	~~1055~~	1028
608.24	4" CONCRETE SIDEWALK (F)	SY	20	
608.54	DETECTABLE WARNING DEVICES, CAST IRON	SY	~~5~~	3.6
609.01	STRAIGHT GRANITE CURB	LF	~~35~~	46
615.03	TRAFFIC SIGN TYPE C (F)	SF	34	
615.034	RELOCATING TRAFFIC SIGN, TYPE C	U	~~2~~	1
615.06	TRAFFIC SIGN TYPE CC (F)	SF	8	
615.064	RELOCATING TRAFFIC SIGN TYPE CC	U	~~1~~	0
618.6	UNIFORMED OFFICERS	~~0~~		0
628.2	SAWED BITUMINOUS PAVEMENT	LF	~~78~~	67.4
632.3112	RETROREFLECT. THERMOPLAS. PAVE. MARKING, 12" LINE	LF	160	
645.44	TEMPORARY SLOPE STABILIZATION TYPE D (WILDLIFE FRIENDLY)	SY	~~425~~	25
645.531	SILT FENCE	LF	~~2500~~	2390
645.7	STORM WATER POLLUTION PREVENTION PLAN	U	1	
645.71	MONITORING SWPPP AND EROSION AND SEDIMENT CONTROLS	EA	12	
646.51	TURF ESTABLISHMENT WITH MULCH, TACKIFIERS AND LOAM	SY	400	
692	MOBILIZATION	U	1	
698.12	FIELD OFFICE TYPE B	MON	~~4~~	2
699	MISCELLANEOUS TEMPORARY EROSION AND SEDIMENT CONTROL	~~0~~		$1,000

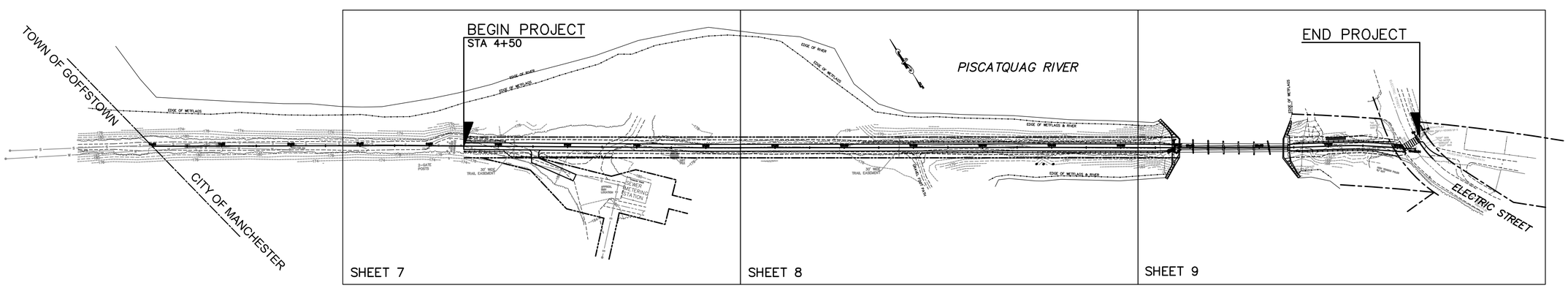

KEY PLAN
SCALE: 1" = 80'–0"

80 0 40 80 160

I HEREBY CERTIFY THAT TO THE BEST OF MY KNOWLEDGE, BASED UPON CONSTRUCTION RECORDS, THAT ALL WORK SHOWN IN THESE DRAWINGS HAS BEEN COMPLETED AS SHOWN.

HOYLE, TANNER & ASSOCIATES, INC.

SIGNED NOVEMBER 2015

NOTE: WORDING CONTAINED HEREON IS UNDERSTOOD TO BE PAST TENSE.

REV.	DESCRIPTION	DRW BY	CHKD BY	DATE
△1	RECORD COPY REVISIONS	TAG	GPC	11–2015

This document is prepared as an instrument of service and shall remain the property of Hoyle, Tanner. It may not be used, reproduced, disseminated or transferred in any manner, including electronically, for any other purpose than this project, without the written permission of Hoyle, Tanner.

DECEMBER 2014

DESIGN BY: JCR
DRAWN BY: PBD / TAG
CHKD. BY: STJ
SCALE: AS SHOWN

Hoyle, Tanner & Associates, Inc.
150 Dow Street, Manchester, NH 03101-1227
Tel (603) 669-5555 · Fax (603) 669-4168
Webpage: www.hoyletanner.com

CITY OF MANCHESTER
MANCHESTER, NEW HAMPSHIRE

PISCATAQUOG RIVER TRAIL PHASE III–A

NOTES AND QUANTITIES (2 OF 2)

PROJECT NO.: 093143
FILE NAME:
LAYOUT NAME: AB093143NTS2

SHEET NO.
3
SHEET 3 OF 27

REFERENCE PLANS:

(1) "LOT LINE ADJUSTMENT PLAN; TAX MAP 693 LOT 55; BIRON STREET; MANCHESTER, NEW HAMPSHIRE" SCALE: 1'=100; DATED: FEB. 2003, DWGS 1 & 2 BY CLD CONSULTING ENGINEERS, RECORDED H.C.R.D. PLAN NO. 32476 & 32477.

(2) "BOUNDARY/CONSOLIDATION PLAN; TAX MAP 693 LOTS 37,38,39,40,40A & 55; BIRON STREET; MANCHESTER, NEW HAMPSHIRE" SCALE: 1"=100', DATED: JULY 2001, DWG B1, BY CLD CONSULTING ENGINEERS, RECORDED H.C.R.D. PLAN NO. 32474.

(3) "RIGHT-OF WAY AND TRACK MAP; THE CONCORD & MONTREAL R.R.; OPERATED BY THE; BOSTON AND MAINE R.R.; STATION 52+80 TO STATION 105+60" SCALE: 1 IN = 100 FT. DATED: JUNE 30, 1914 BY: OFFICE OF VALUATION ENGINEER, BOSTON, MASS. SHEET V-232/2.

(4) "RIGHT-OF WAY AND TRACK MAP; THE CONCORD & MONTREAL R.R.; OPERATED BY THE; BOSTON AND MAINE R.R.; STATION 105+60 TO STATION 158+40"SCALE: 1 IN = 100 FT. DATED: JUNE 30, 1914 BY: OFFICE OF VALUATION ENGINEER, BOSTON, MASS. SHEET V-232/3.

(5) "STATE OF NEW HAMPSHIRE; DEPARTMENT OF PUBLIC WORKS AND HIGHWAYS; R.O.W. PLANS OF PROPOSED FEDERAL AID URBAN PROJECT; US 23 (13); N.H. PROJECT NO C-1525; PINARD ST.-KELLEY ST." DATED: JAN. 13, 1976, RECORDED H.C.R.D. PLAN NO 8842.

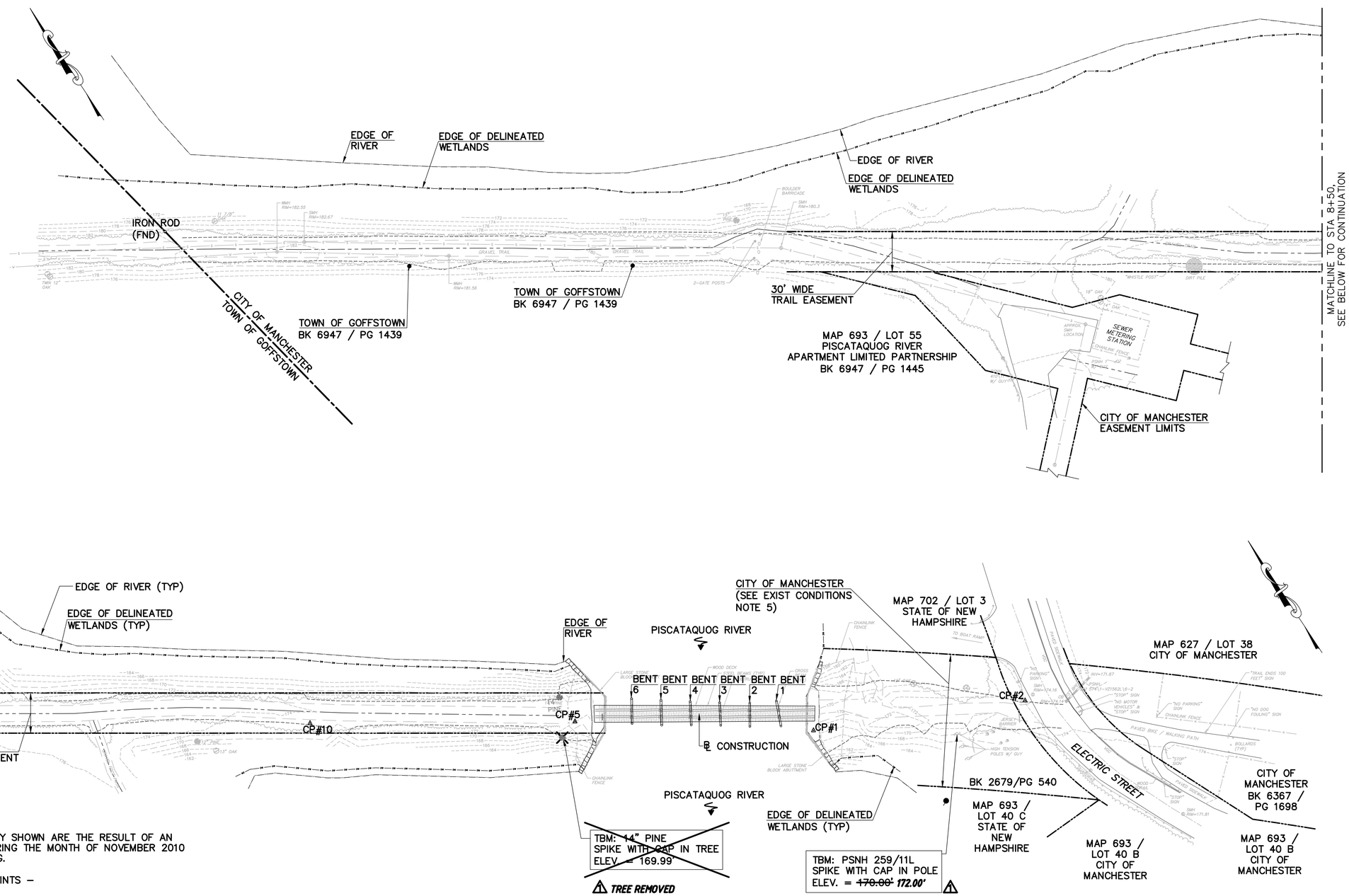

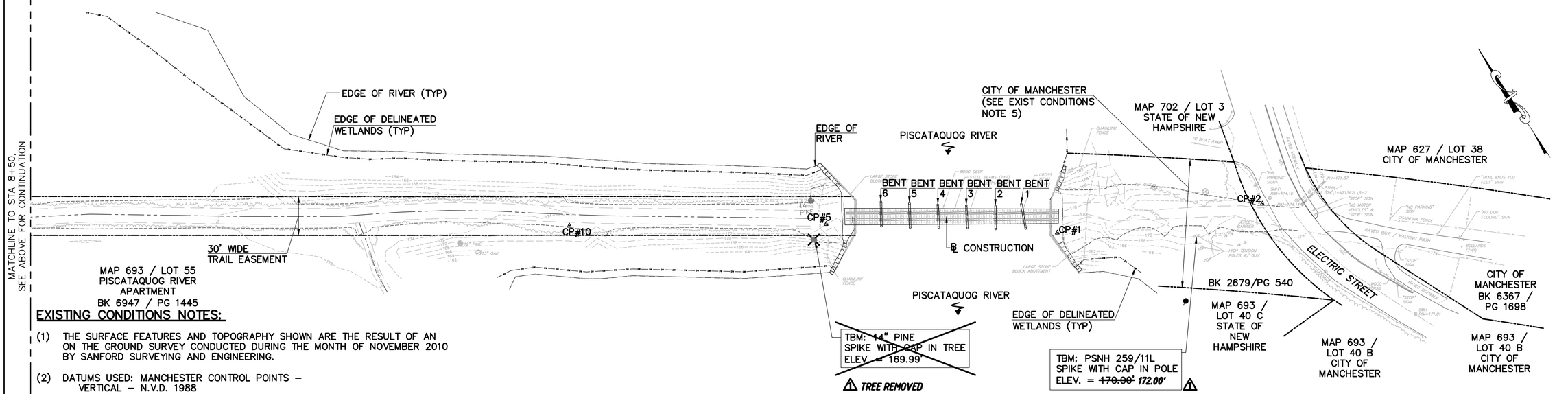

EXISTING CONDITIONS NOTES:

(1) THE SURFACE FEATURES AND TOPOGRAPHY SHOWN ARE THE RESULT OF AN ON THE GROUND SURVEY CONDUCTED DURING THE MONTH OF NOVEMBER 2010 BY SANFORD SURVEYING AND ENGINEERING.

(2) DATUMS USED: MANCHESTER CONTROL POINTS –
VERTICAL – N.V.D. 1988
HORIZONTAL– N.H.S.P.C.S. 1983 (H.A.R.N.) – N.V.D. 1988
THE BENCHMARK USED IS LOCATED ON A STONE BOUND AT THE NORTHEAST CORNER OF MILFORD AND BOWMAN STREETS.

(3) THERE WERE NO OBSERVED DIG SAFE MARKINGS ASSOCIATED WITH THIS PROJECT AT THE SITE. LOCATION OF UNDERGROUND UTILITIES ARE APPROXIMATE. DIG SAFE SHOULD BE CONTACTED PRIOR TO ANY EXCAVATION WITHIN THE SURVEYED AREA.

(4) RIGHT OF WAY WIDTH IS VARIABLE AND DETERMINED FROM RECORD PLANS AND FIELD EVIDENCE.

(5) THE STATE OF NEW HAMPSHIRE ACQUIRED THE PARCEL LOCATED BETWEEN ELECTRIC STREET AND THE PISCATAQUOG RIVER WHICH IS RECORDED IN BOOK 2222/PG 287. THE PARCEL WAS LATER DEEDED TO THE CITY OF MANCHESTER IN BOOK 2679/540.

WETLAND NOTE:

CHRISTOPHER K. DANFORTH, CERTIFIED WETLAND SCIENTIST #77, OF CHRISTOPHER K. DANFORTH & ASSOC., LLC, PO BOX 241, FRANCESTOWN NH, PERFORMED THE DELINEATION OF JURISDICTIONAL WETLANDS COMPLETED ON OCTOBER 28, 2010 USING THE TECHNICAL CRITERIA IN THE CORPS OF ENGINEERS WETLAND DELINEATION MANUAL (TECHNICAL REPORT Y-87-1, JANUARY 1987). VEGETATION STATUS DETERMINED FROM THE NATIONAL LIST OF PLANT SPECIES THAT OCCUR IN WETLANDS: 1988 NEW HAMPSHIRE, USFWS, 1988. HYDRIC SOILS WERE DETERMINED USING THE CRITERIA IN FIELD INDICATORS FOR IDENTIFYING HYDRIC SOILS IN NEW ENGLAND, VER. III, APRIL 2004. THIS CERTIFICATION ENSURES THAT THE WETLANDS WERE CORRECTLY DELINEATED AND IDENTIFIED IN THE FIELD HOWEVER IT MAKES NO CLAIM TO THE ACCURACY OR PRECISION OF THE WETLAND BOUNDARIES SHOWN ON THIS PLAN.

40 0 20 40 80

I HEREBY CERTIFY THAT TO THE BEST OF MY KNOWLEDGE, BASED UPON CONSTRUCTION RECORDS, THAT ALL WORK SHOWN IN THESE DRAWINGS HAS BEEN COMPLETED AS SHOWN.

HOYLE, TANNER & ASSOCIATES, INC.

SIGNED NOVEMBER 2015

NOTE: WORDING CONTAINED HEREON IS UNDERSTOOD TO BE PAST TENSE.

REV.	DESCRIPTION	DRW BY	CHKD BY	DATE
1	RECORD COPY REVISIONS	TAG	GPC	11-2015

This document is prepared as an instrument of service and shall remain the property of Hoyle, Tanner. It may not be used, reproduced, disseminated or transferred in any manner, including electronically, for any other purpose than this project, without the written permission of Hoyle, Tanner.

DECEMBER 2014

DESIGN BY: JCR

DRAWN BY: PBD / TAG

CHKD. BY: STJ

SCALE: AS SHOWN

Hoyle, Tanner & Associates, Inc.
150 Dow Street, Manchester, NH 03101-1227
Tel (603) 669-5555 · Fax (603) 669-4168
Webpage: www.hoyletanner.com

CITY OF MANCHESTER
MANCHESTER, NEW HAMPSHIRE

PISCATAQUOG RIVER TRAIL PHASE III-A

EXISTING CONDITIONS PLAN

PROJECT NO.: 093143

FILE NAME:

LAYOUT NAME: AB093143EXD

SHEET NO.

4

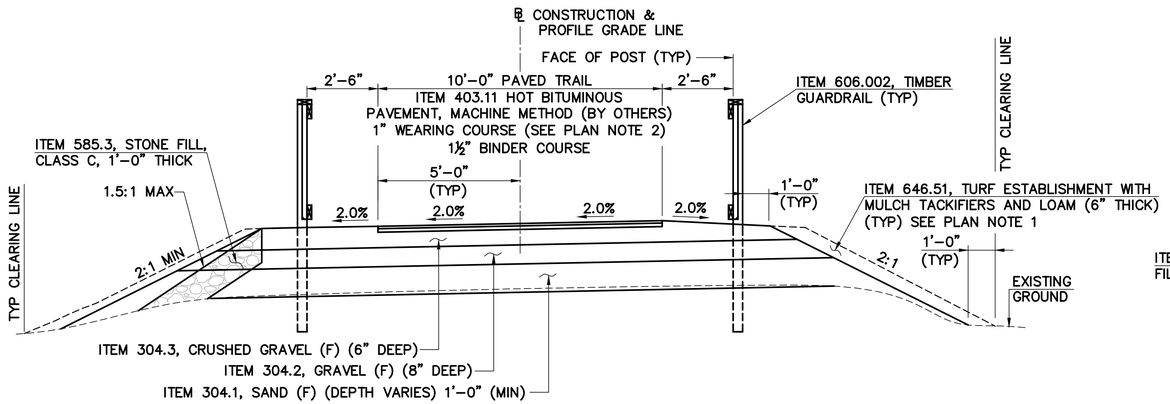

TYPICAL TRAIL SECTION
STA. 14+25.00 TO STA. 14+49.42
STA. 17+00.00 TO STA. 17+25.00
SCALE: ⅜" = 1'-0"

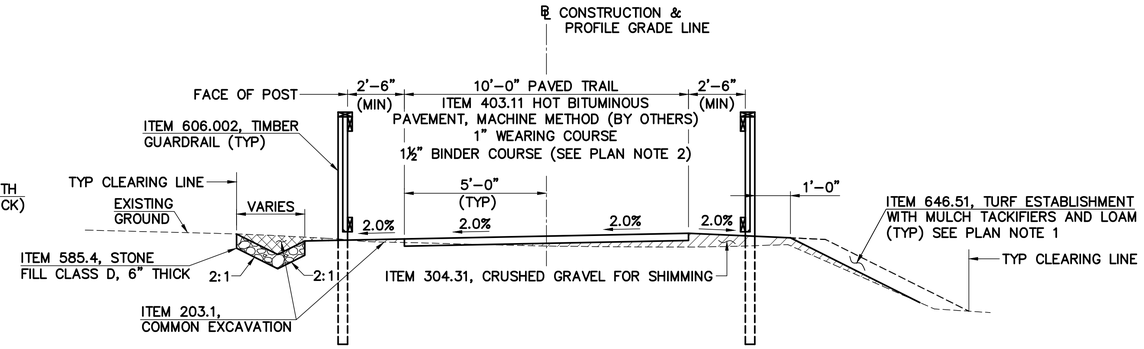

TYPICAL TRAIL SECTION
STA. 17+25 – STA. 18+08.89
SCALE: ⅜" = 1'-0"

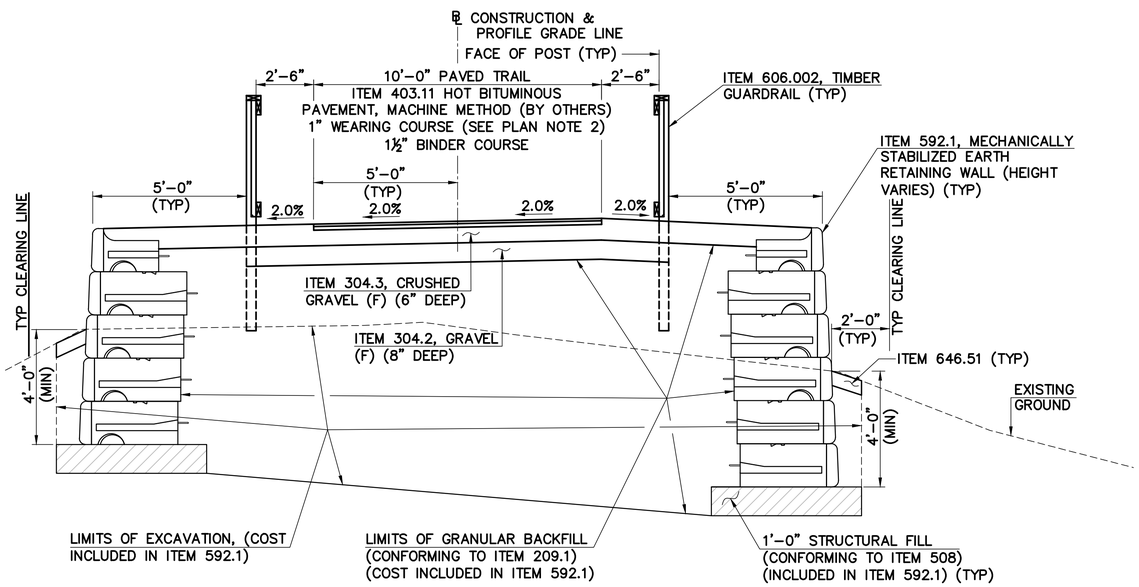

TYPICAL TRAIL SECTION
STA. 14+49.42 TO STA. 14+74.38
STA. 16+44.74 TO STA. 17+00.00
SCALE: ⅜" = 1'-0"

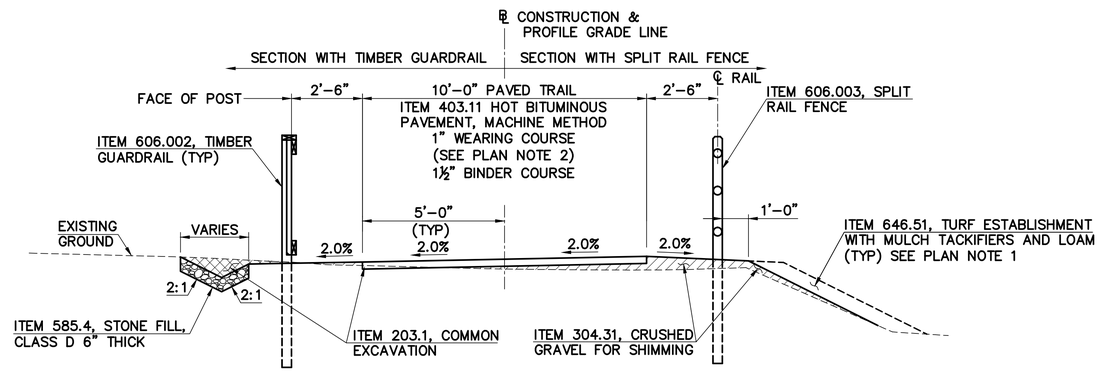

TYPICAL TRAIL SECTION
STA. 4+50 – STA. 14+25
SCALE: ⅜" = 1'-0"

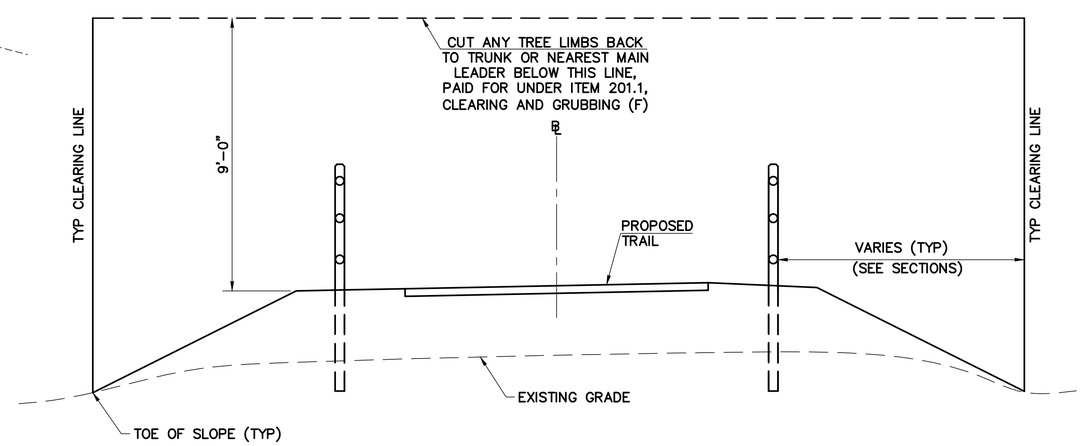

TREE CLEARING DETAIL
SCALE: NONE

PLAN NOTES:

(1) PROVIDE ITEM 645.44, TEMPORARY SLOPE STABILIZATION TYPE D (WILDLIFE FRIENDLY) ON ALL PROPOSED 2:1 SLOPES GREATER THAN 3' IN LENGTH TRANSVERSE TO THE TRAIL. SEE TRAIL CROSS SECTIONS.

(2) MAXIMUM COARSE AGGREGATE SHALL BE ⅜". SEE PAVING NOTE 4 ON SHEET 3.

SCALE: ⅜" = 1'-0"
0 1' 2' 4' 8'

I HEREBY CERTIFY THAT TO THE BEST OF MY KNOWLEDGE, BASED UPON CONSTRUCTION RECORDS, THAT ALL WORK SHOWN IN THESE DRAWINGS HAS BEEN COMPLETED AS SHOWN.

HOYLE, TANNER & ASSOCIATES, INC.

SIGNED _____ NOVEMBER 2015

NOTE: WORDING CONTAINED HEREON IS UNDERSTOOD TO BE PAST TENSE.

REV.	DESCRIPTION	DRW BY	CHKD BY	DATE

This document is prepared as an instrument of service and shall remain the property of Hoyle, Tanner. It may not be used, reproduced, disseminated or transferred in any manner, including electronically, for any other purpose than this project, without the written permission of Hoyle, Tanner.

DECEMBER 2014

DESIGN BY: JCR
DRAWN BY: PBD / TAG
CHKD. BY: STJ
SCALE: AS SHOWN

Hoyle, Tanner & Associates, Inc.
150 Dow Street, Manchester, NH 03101-1227
Tel (603) 669-5555 · Fax (603) 669-4168
Webpage: www.hoyletanner.com

CITY OF MANCHESTER
MANCHESTER, NEW HAMPSHIRE

PISCATAQUOG RIVER TRAIL PHASE III-A

TYPICAL TRAIL SECTIONS

PROJECT NO.: 093143
FILE NAME:
LAYOUT NAME: AB093143DTL1

SHEET NO.
5

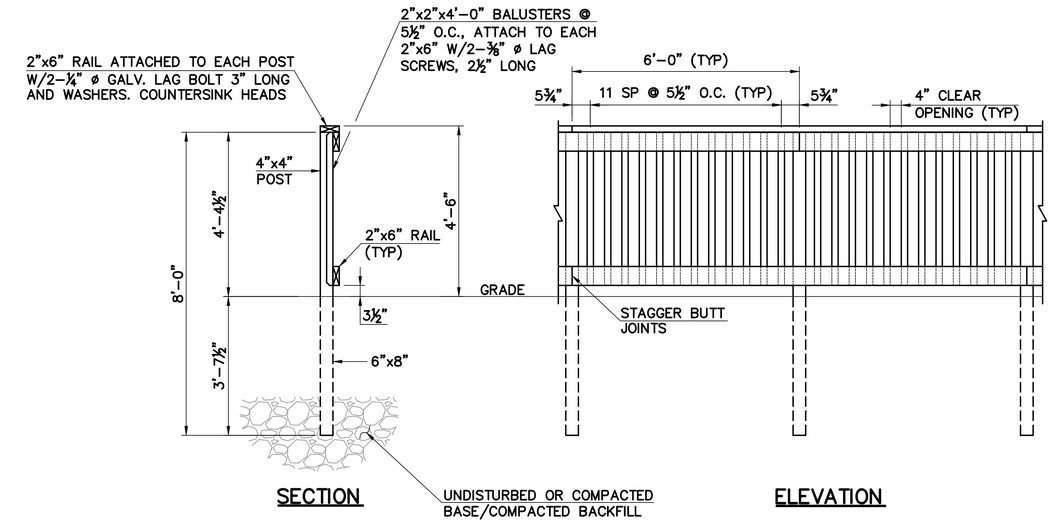

TIMBER GUARDRAIL DETAILS (ITEM 606.002)

NOT TO SCALE

TIMBER GUARDRAIL (ITEM 606.002) CONSTRUCTION NOTES:

STA. 14+30.00 LT. 7.0' TO STA. 14+80.00± LT. 7.0' (TAPER LAST TWO SECTIONS TO MATCH BRIDGE RAIL)
STA. 14+30.00 RT. 7.0' TO STA. 14+80.00± RT. 7.0' (TAPER LAST TWO SECTIONS TO MATCH BRIDGE RAIL)
STA. 16+40.00± LT. 7.0' TO STA. 17+67.80 LT. 7.0' (TAPER FIRST TWO SECTIONS TO MATCH BRIDGE RAIL)
STA. 16+40.00± RT. 7.0' TO STA. 17+67.80 RT. 7.0' (TAPER FIRST TWO SECTIONS TO MATCH BRIDGE RAIL)
STA. 17+67.80 LT. 7.0' TO STA. 17+94.50 LT. 8.5'±
STA. 17+67.80 RT. 7.0' TO STA. 18+00.00 RT. 12.1'±

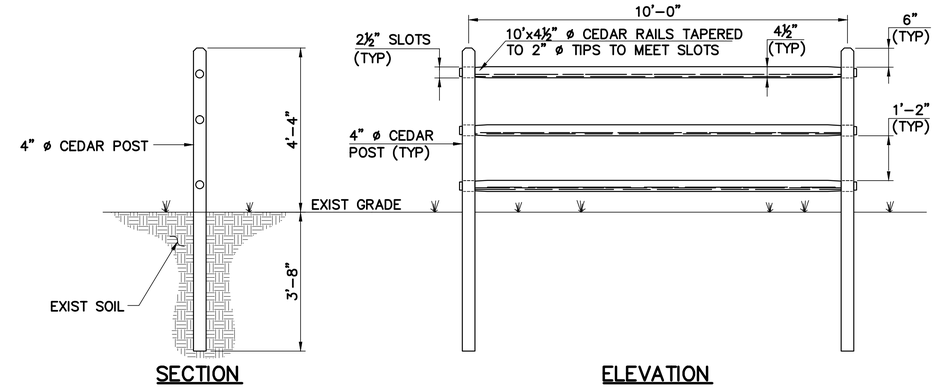

SPLIT RAIL FENCE DETAILS (ITEM 606.003)

NOT TO SCALE

SPLIT RAIL FENCE (ITEM 606.003) CONSTRUCTION NOTES:

STA. 4+50.00 LT. 7.5' TO STA. 5+10.00 LT. 7.5'
STA. 4+50.00 RT. 7.5' TO STA. 5+10.00 RT. 7.5'
STA. 5+10.00 RT. 7.5' TO STA. 5+17.75 RT. 15.0'
STA. 5+17.75 RT. 15.0' TO STA. 5+49.50 RT. 15.0'
STA. 5+56.75 RT. 15.0' TO STA. 6+37.50 RT. 15.0'
STA. 6+53.50 RT. 15.0' TO STA. 6+63.50 RT. 15.0'
STA. 6+76.50 LT. 14.0' TO STA. 7+6.50 LT. 14.0'
STA. 10+25.00 LT. 7.5' TO STA. 14+30.00 LT. 7.5'
STA. 10+85.00 RT. 7.5' TO STA. 11+00.00 RT. 13.5' (PROVIDE 10'-0" RETURN AT STA. 11+00.00)
STA. 11+10.00 RT. 13.5' TO STA. 14+30.00 RT. 7.5' (PROVIDE 10'-0" RETURN AT STA. 11+10.00)

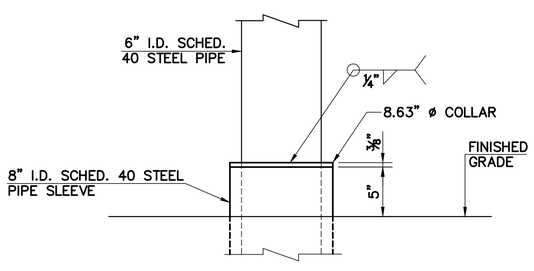

DETAIL "A"

SCALE: NONE
(THROUGH BOLT AND LOCK NOT SHOWN FOR CLARITY)

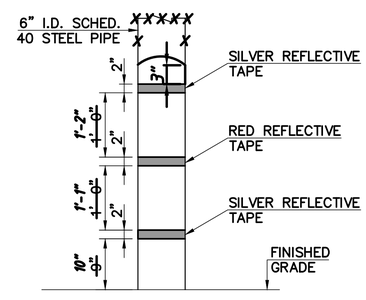

⚠ BOLLARD REFLECTIVE TAPE DETAIL

SCALE: NONE

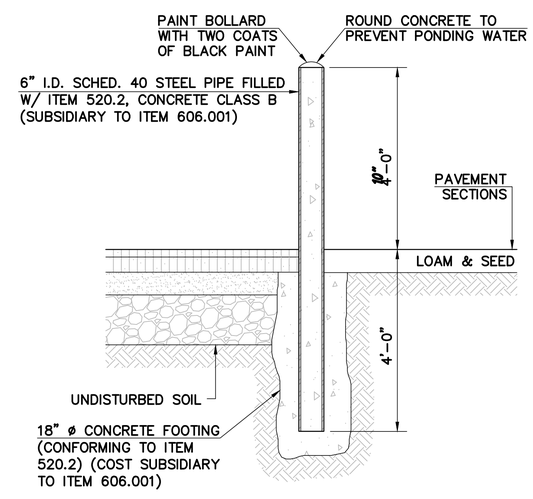

TYPICAL FIXED STEEL PIPE BOLLARD DETAIL

SCALE: NONE
NOTE: ALL WORK INCLUDED IN ITEM 606.001

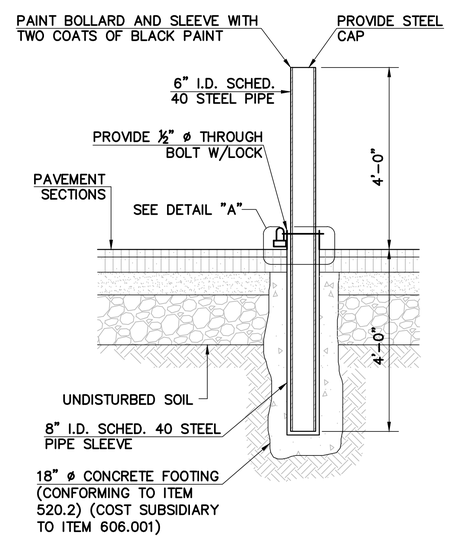

TYPICAL REMOVABLE STEEL PIPE BOLLARD DETAIL

SCALE: NONE
NOTE: ALL WORK INCLUDED IN ITEM 606.001

SHEET NOTE:

(1) ALL EXCAVATION AND BACKFILL FOR RAIL POSTS INCLUDED IN ITEM 606.002 AND 606.003. SEE TIMBER RAIL NOTE 1 ON SHEET 3.

I HEREBY CERTIFY THAT TO THE BEST OF MY KNOWLEDGE, BASED UPON CONSTRUCTION RECORDS, THAT ALL WORK SHOWN IN THESE DRAWINGS HAS BEEN COMPLETED AS SHOWN.

HOYLE, TANNER & ASSOCIATES, INC.

SIGNED NOVEMBER 2015

NOTE: WORDING CONTAINED HEREON IS UNDERSTOOD TO BE PAST TENSE.

REV.	DESCRIPTION	DRW BY	CHKD BY	DATE
1	RECORD COPY REVISIONS	TAG	GPC	11-2015

This document is prepared as an instrument of service and shall remain the property of Hoyle, Tanner. It may not be used, reproduced, disseminated or transferred in any manner, including electronically, for any other purpose than this project, without the written permission of Hoyle, Tanner.

DECEMBER 2014
DESIGN BY: JCR
DRAWN BY: PBD / TAG
CHKD. BY: STJ
SCALE: AS SHOWN

Hoyle, Tanner & Associates, Inc.
150 Dow Street, Manchester, NH 03101-1227
Tel (603) 669-5555 · Fax (603) 669-4168
Webpage: www.hoyletanner.com

CITY OF MANCHESTER
MANCHESTER, NEW HAMPSHIRE

PISCATAQUOG RIVER TRAIL PHASE III-A

TRAIL DETAIL SHEETS

PROJECT NO.: 093143
FILE NAME:
LAYOUT NAME: AB093143DTL2

SHEET NO.
6

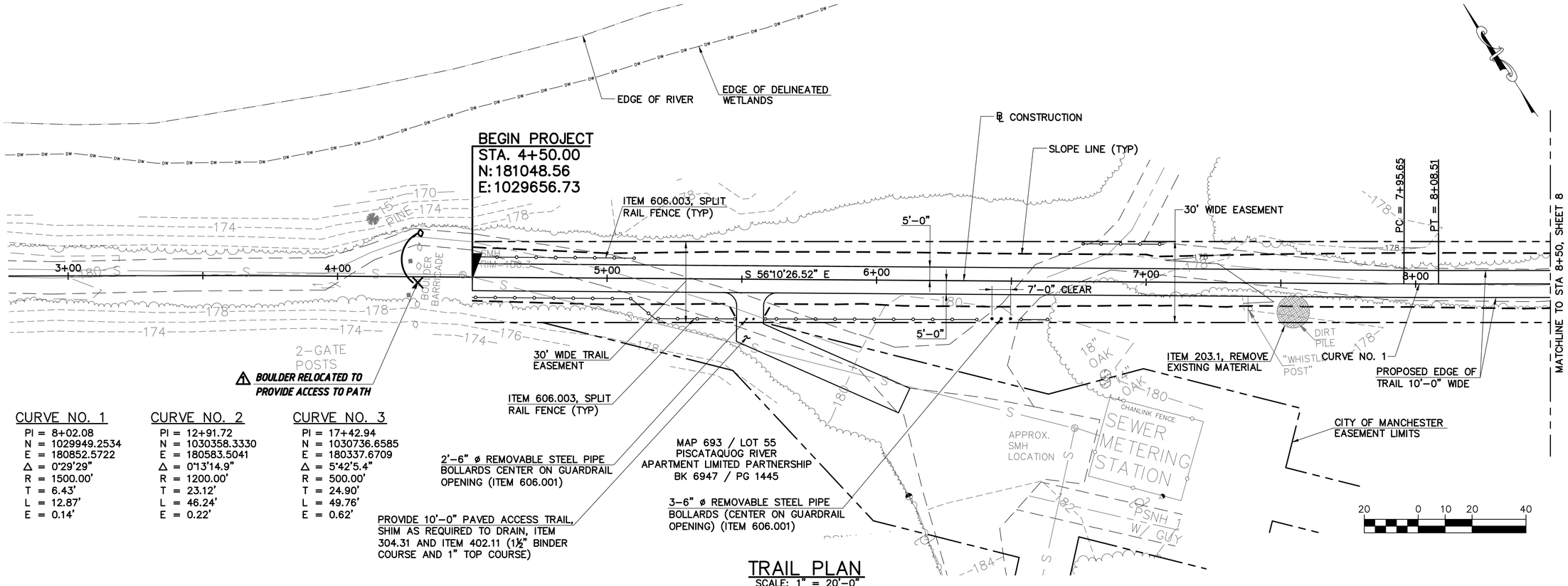

TRAIL PLAN

SCALE: 1" = 20'-0"

CURVE NO. 1	CURVE NO. 2	CURVE NO. 3
PI = 8+02.08	PI = 12+91.72	PI = 17+42.94
N = 1029949.2534	N = 1030358.3330	N = 1030736.6585
E = 180852.5722	E = 180583.5041	E = 180337.6709
Δ = 0°29'29"	Δ = 0°13'14.9"	Δ = 5°42'5.4"
R = 1500.00'	R = 1200.00'	R = 500.00'
T = 6.43'	T = 23.12'	T = 24.90'
L = 12.87'	L = 46.24'	L = 49.76'
E = 0.14'	E = 0.22'	E = 0.62'

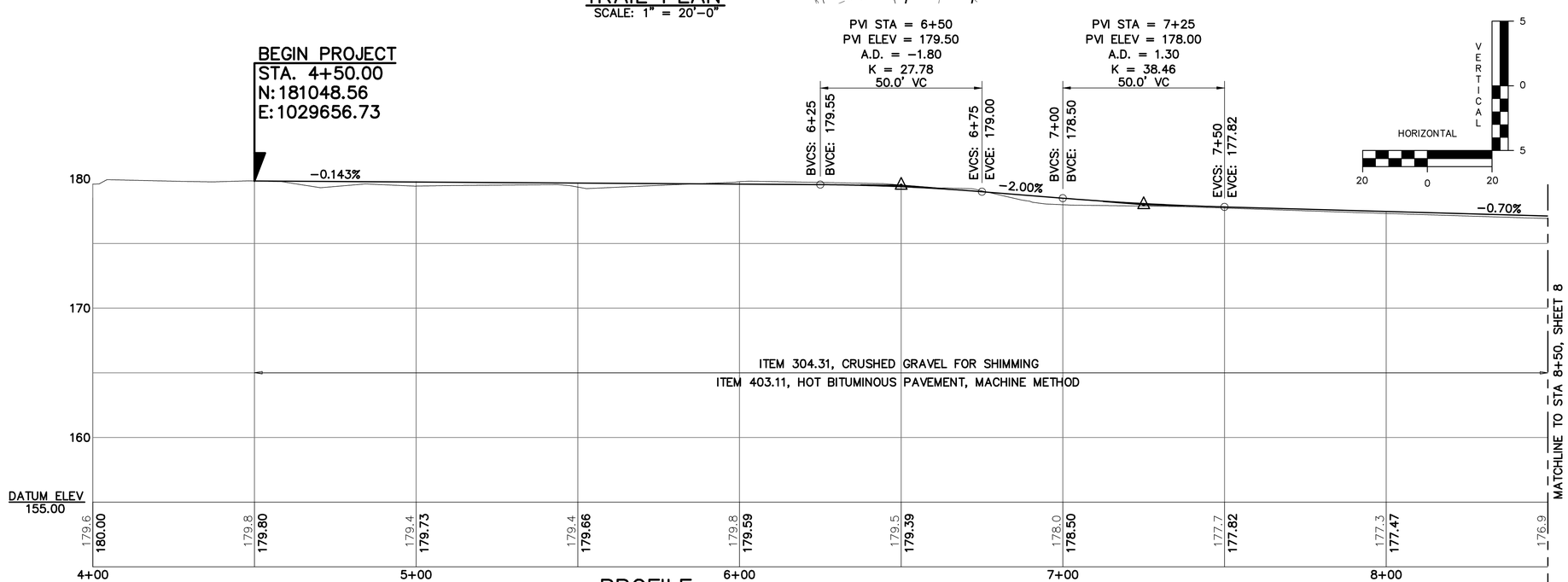

PROFILE

SCALE: HORIZONTAL: 1" = 20'-0"
VERTICAL: 1" = 5'-0"

I HEREBY CERTIFY THAT TO THE BEST OF MY KNOWLEDGE, BASED UPON CONSTRUCTION RECORDS, THAT ALL WORK SHOWN IN THESE DRAWINGS HAS BEEN COMPLETED AS SHOWN.

HOYLE, TANNER & ASSOCIATES, INC.

SIGNED _____ NOVEMBER 2015

NOTE: WORDING CONTAINED HEREON IS UNDERSTOOD TO BE PAST TENSE.

REV.	DESCRIPTION	DRW BY	CHKD BY	DATE
1	RECORD COPY REVISIONS	TAG	GPC	11-2015

This document is prepared as an instrument of service and shall remain the property of Hoyle, Tanner. It may not be used, reproduced, disseminated or transferred in any manner, including electronically, for any other purpose than this project, without the written permission of Hoyle, Tanner.

DECEMBER 2014

DESIGN BY: JCR

DRAWN BY: PBD / TAG

CHKD. BY: STJ

SCALE: AS SHOWN

Hoyle, Tanner & Associates, Inc.
150 Dow Street, Manchester, NH 03101-1227
Tel (603) 669-5555 · Fax (603) 669-4168
Webpage: www.hoyletanner.com

CITY OF MANCHESTER
MANCHESTER, NEW HAMPSHIRE

PISCATAQUOG RIVER TRAIL PHASE III-A

TRAIL PLAN AND PROFILE (1 OF 3)

PROJECT NO.: 093143

FILE NAME:

LAYOUT NAME: AB093143PR01

SHEET NO.

7

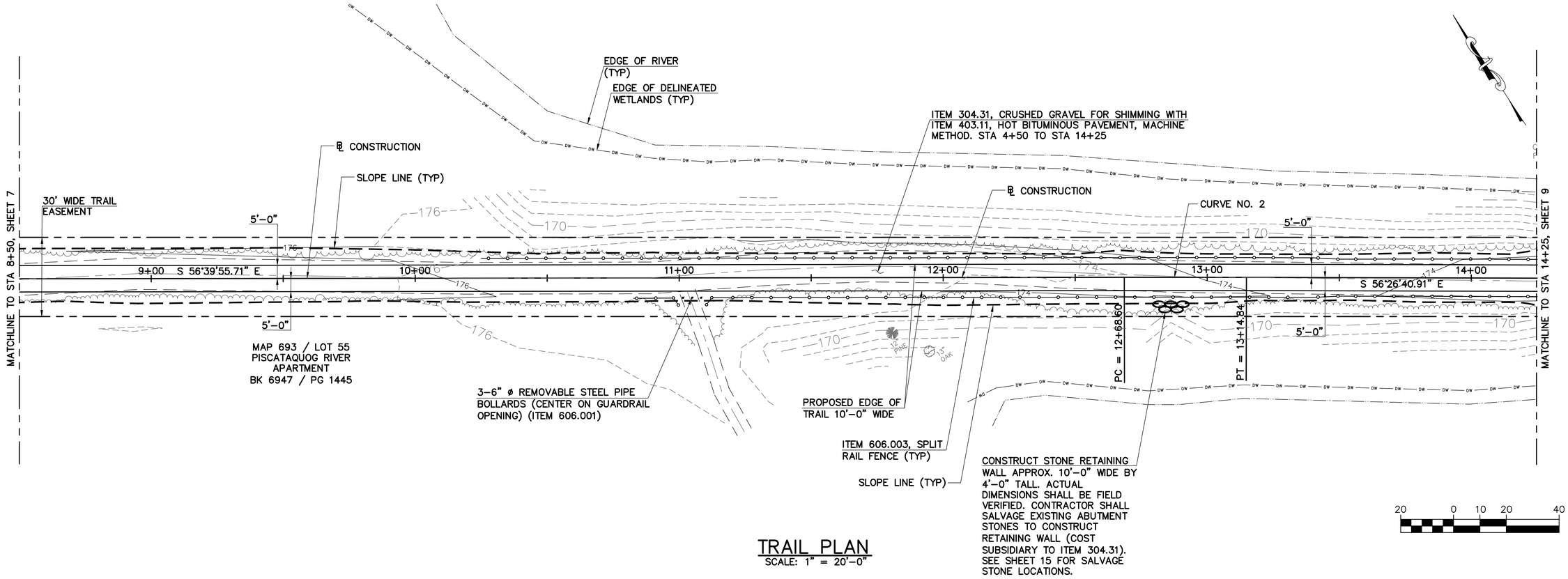

TRAIL PLAN
SCALE: 1" = 20'-0"

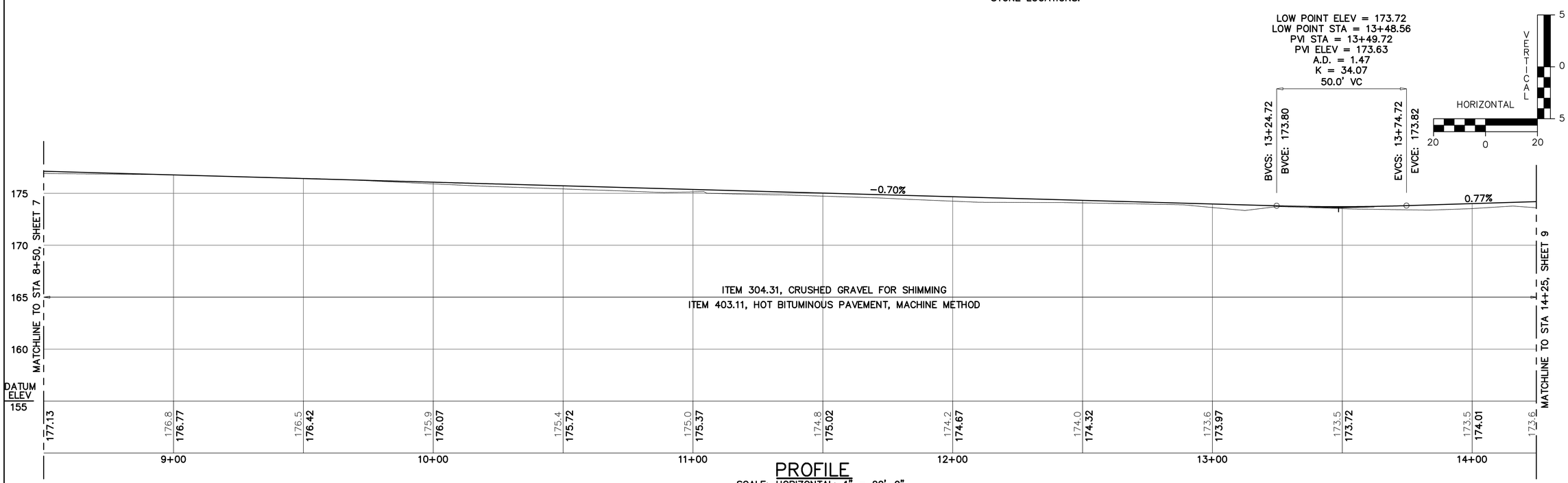

PROFILE
SCALE: HORIZONTAL: 1" = 20'-0"
VERTICAL: 1" = 5'-0"

I HEREBY CERTIFY THAT TO THE BEST OF MY KNOWLEDGE, BASED UPON CONSTRUCTION RECORDS, THAT ALL WORK SHOWN IN THESE DRAWINGS HAS BEEN COMPLETED AS SHOWN.

HOYLE, TANNER & ASSOCIATES, INC.

SIGNED _____ NOVEMBER 2015

NOTE: WORDING CONTAINED HEREON IS UNDERSTOOD TO BE PAST TENSE.

REV.	DESCRIPTION	DRW. BY	CHKD. BY	DATE

This document is prepared as an instrument of service and shall remain the property of Hoyle, Tanner. It may not be used, reproduced, disseminated or transferred in any manner, including electronically, for any other purpose than this project, without the written permission of Hoyle, Tanner.

DECEMBER 2014

DESIGN BY: JCR

DRAWN BY: PBD / TAG

CHKD. BY: STJ

SCALE: AS SHOWN

Hoyle, Tanner & Associates, Inc.
150 Dow Street, Manchester, NH 03101-1227
Tel (603) 669-5555 · Fax (603) 669-4168
Webpage: www.hoyletanner.com

CITY OF MANCHESTER
MANCHESTER, NEW HAMPSHIRE

PISCATAQUOG RIVER TRAIL PHASE III-A

TRAIL PLAN AND PROFILE (2 OF 3)

PROJECT NO.: 093143

FILE NAME:

LAYOUT NAME: AB093143PR01

SHEET NO.

8

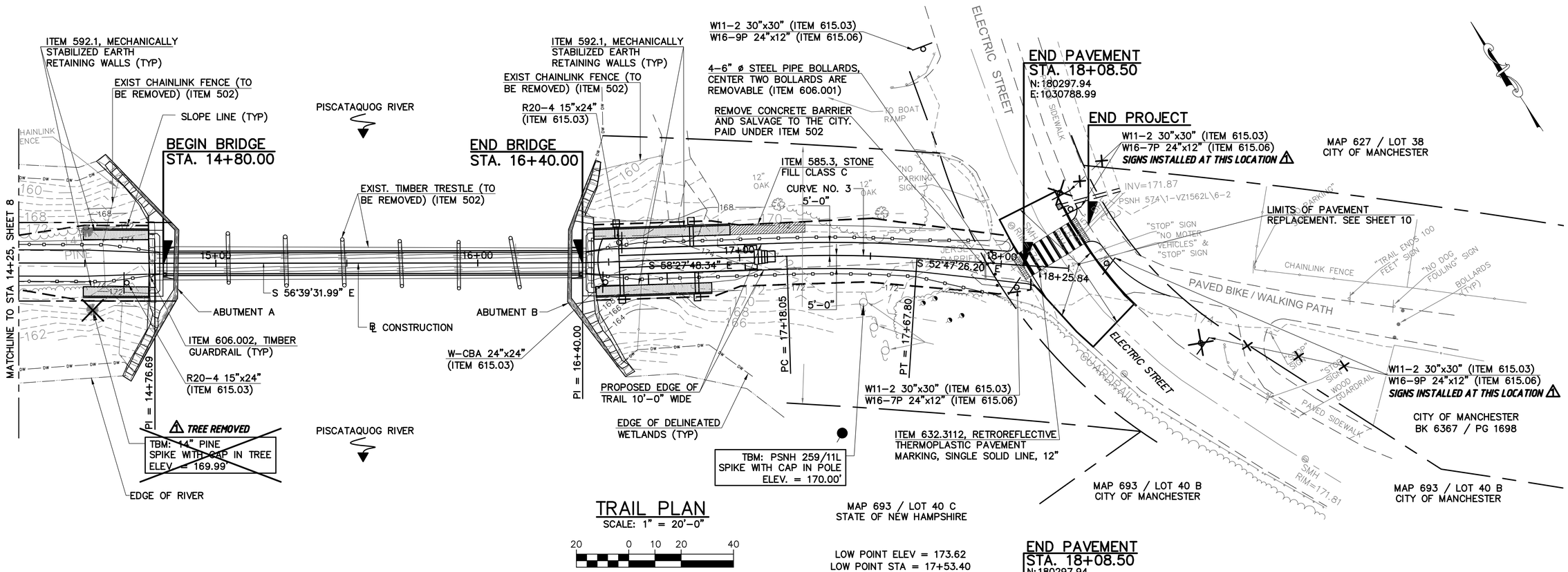

TRAIL PLAN

SCALE: 1" = 20'-0"

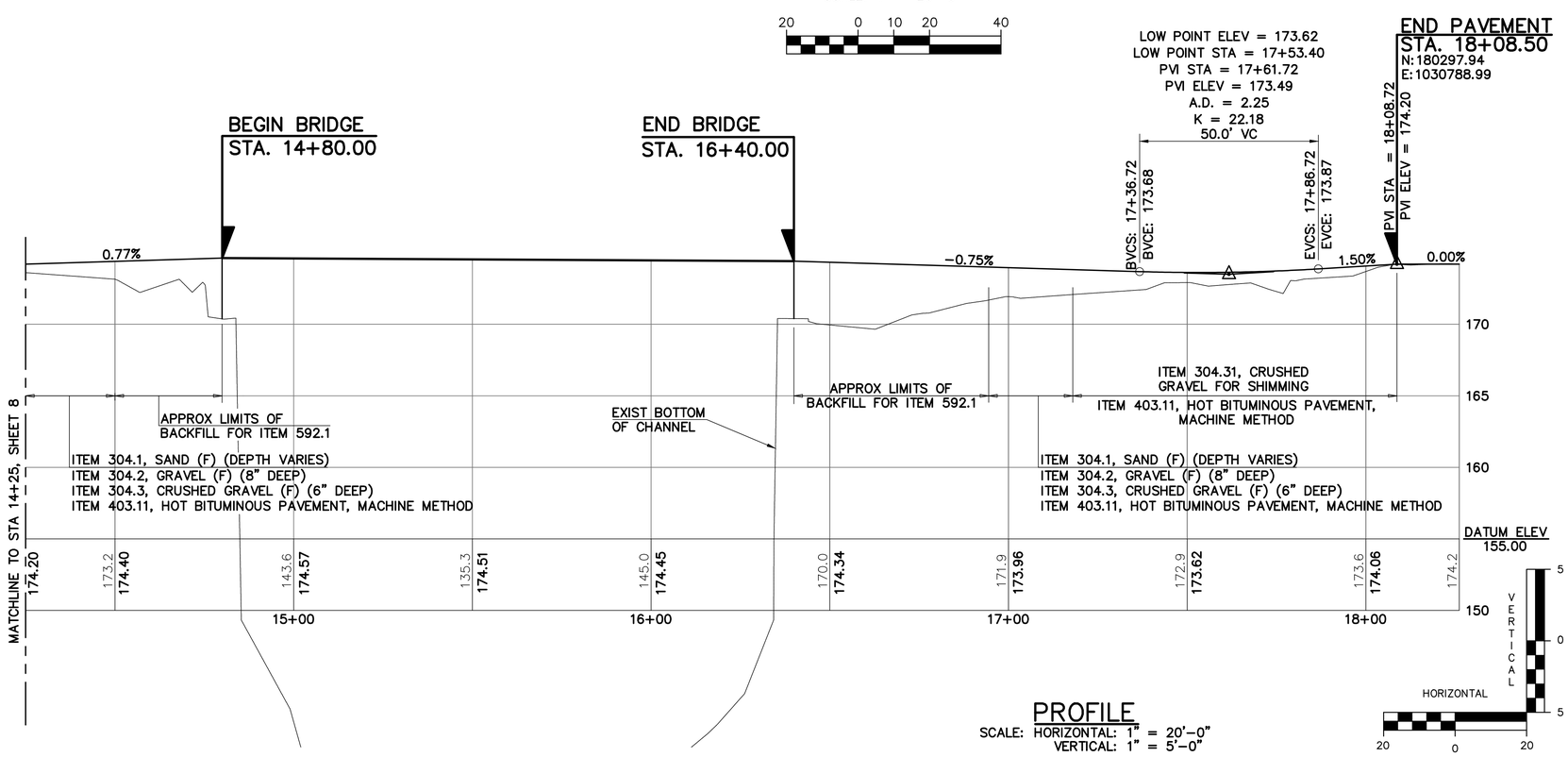

PROFILE

SCALE: HORIZONTAL: 1" = 20'-0"
VERTICAL: 1" = 5'-0"

SHEET NOTES:

1. SEE SHEET 10 FOR SIGN DETAILS.

I HEREBY CERTIFY THAT TO THE BEST OF MY KNOWLEDGE, BASED UPON CONSTRUCTION RECORDS, THAT ALL WORK SHOWN IN THESE DRAWINGS HAS BEEN COMPLETED AS SHOWN.

HOYLE, TANNER & ASSOCIATES, INC.

SIGNED NOVEMBER 2015

NOTE: WORDING CONTAINED HEREON IS UNDERSTOOD TO BE PAST TENSE.

REV.	DESCRIPTION	DRW. BY	CHKD. BY	DATE
1	RECORD COPY REVISIONS	TAG	GPC	11-2015

This document is prepared as an instrument of service and shall remain the property of Hoyle, Tanner. It may not be used, reproduced, disseminated or transferred in any manner, including electronically, for any other purpose than this project, without the written permission of Hoyle, Tanner.

DECEMBER 2014

DESIGN BY: JCR

DRAWN BY: PBD / TAG

CHKD. BY: STJ

SCALE: AS SHOWN

Hoyle, Tanner & Associates, Inc.
150 Dow Street, Manchester, NH 03101-1227
Tel (603) 669-5555 · Fax (603) 669-4168
Webpage: www.hoyletanner.com

CITY OF MANCHESTER
MANCHESTER, NEW HAMPSHIRE

PISCATAQUOG RIVER TRAIL PHASE III-A

TRAIL PLAN AND PROFILE (3 OF 3)

PROJECT NO.: 093143

FILE NAME:

LAYOUT NAME: AB093143PR01

SHEET NO.

9

SHEET 9 OF 27

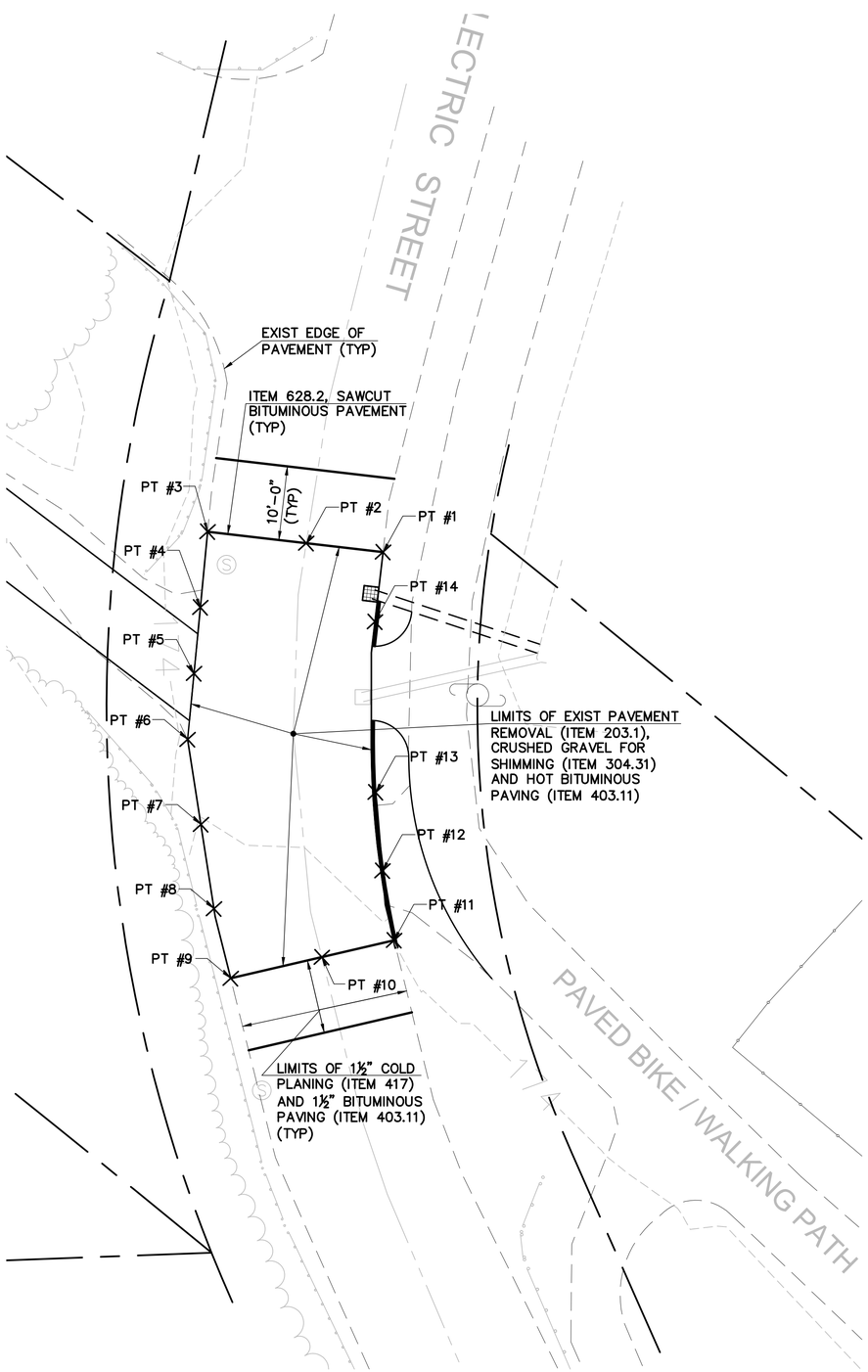

PAVEMENT REPLACEMENT DETAIL

SCALE: 1" = 10'-0"

0 5' 10' 20' 30'

POINT #	SWING TIE TO CENTER OF CB GRATE	EXIST EL	PROPOSED EL
1	20'-0"±	174.78	174.78
2	23'-0"±	174.23	174.23
3	30'-6"±	174.33	174.33
4	25'-0"±	174.26	174.29
5	22-11"±	174.20	174.25
6	24'-0"±	174.13	174.21
7	27'-6"±	173.99	174.06
8	35'-0"±	173.84	173.91
9	42'-0"±	173.77	173.77
10	36'-6"±	173.76	173.76
11	34'-0"±	174.02	174.02
12	23'-0"±	174.09	174.09
13	13'-0"±	174.15	174.10
14	9'-0"±	174.66	174.56

NOTE

(1) QUANTITIES FOR ITEM 203.1, 304.31 AND 403.11 ARE BASED ON AN EXISTING AND PROPOSED PAVEMENT THICKNESS OF 4". PROPOSED PAVEMENT SHALL MATCH EXISTING PAVEMENT THICKNESS OR SHALL BE 4" IF EXISTING PAVEMENT THICKNESS IS LESS THAN 4".

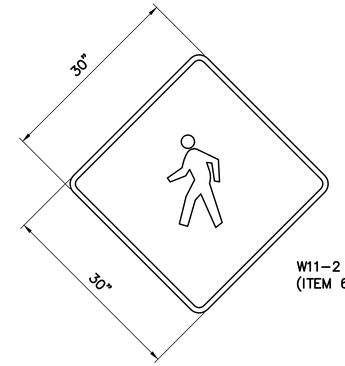

W11-2
(ITEM 615.03)

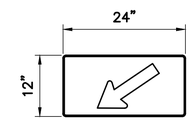

W16-7P
ATTACH BELOW W11-2
(ITEM 615.06)

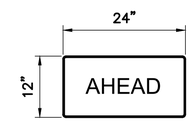

W16-9P
ATTACH BELOW W11-2
(ITEM 615.06)

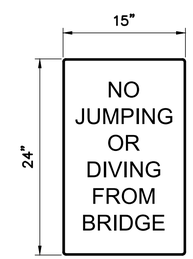

R20-4
(ITEM 615.03)

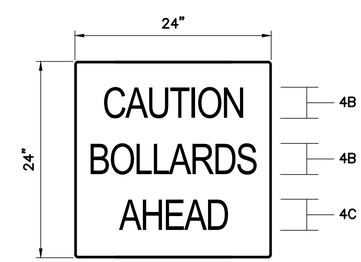

W-CBA
(ITEM 615.03)

SIGN DETAILS

NOT TO SCALE

I HEREBY CERTIFY THAT TO THE BEST OF MY KNOWLEDGE, BASED UPON CONSTRUCTION RECORDS, THAT ALL WORK SHOWN IN THESE DRAWINGS HAS BEEN COMPLETED AS SHOWN.

HOYLE, TANNER & ASSOCIATES, INC.

SIGNED _____ NOVEMBER 2015

NOTE: WORDING CONTAINED HEREON IS UNDERSTOOD TO BE PAST TENSE.

REV.	DESCRIPTION	DRW BY	CHKD BY	DATE

This document is prepared as an instrument of service and shall remain the property of Hoyle, Tanner. It may not be used, reproduced, disseminated or transferred in any manner, including electronically, for any other purpose than this project, without the written permission of Hoyle, Tanner.

DECEMBER 2014

DESIGN BY: JCR

DRAWN BY: PBD / TAG

CHKD. BY: STJ

SCALE: AS SHOWN

Hoyle, Tanner & Associates, Inc.
150 Dow Street, Manchester, NH 03101-1227
Tel (603) 669-5555 · Fax (603) 669-4168
Webpage: www.hoyletanner.com

CITY OF MANCHESTER
MANCHESTER, NEW HAMPSHIRE

PISCATAQUOG RIVER TRAIL PHASE III-A

PAVEMENT REPLACEMENT DETAIL

PROJECT NO.: 093143

FILE NAME:

LAYOUT NAME: AB093143PRD

SHEET NO.

10

SHEET 10 OF 27

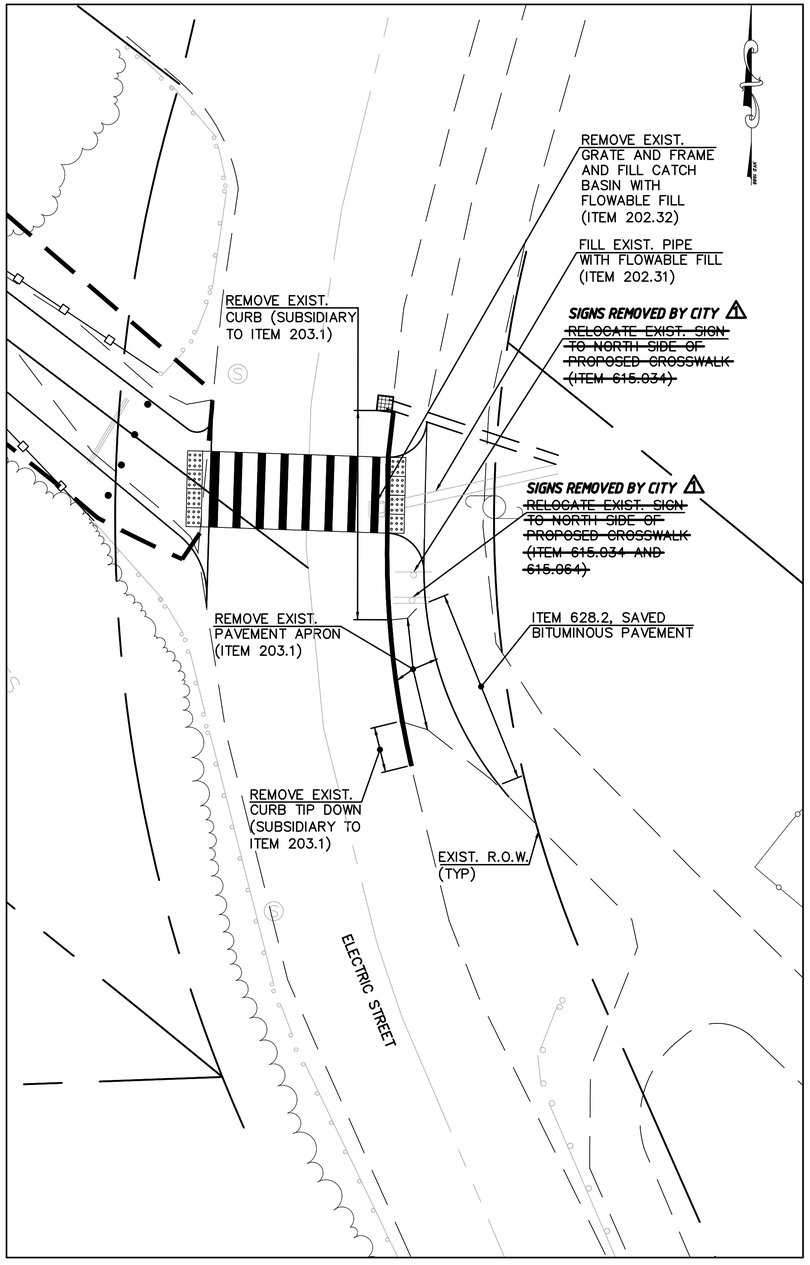

EXISTING

SCALE: 1" = 10'

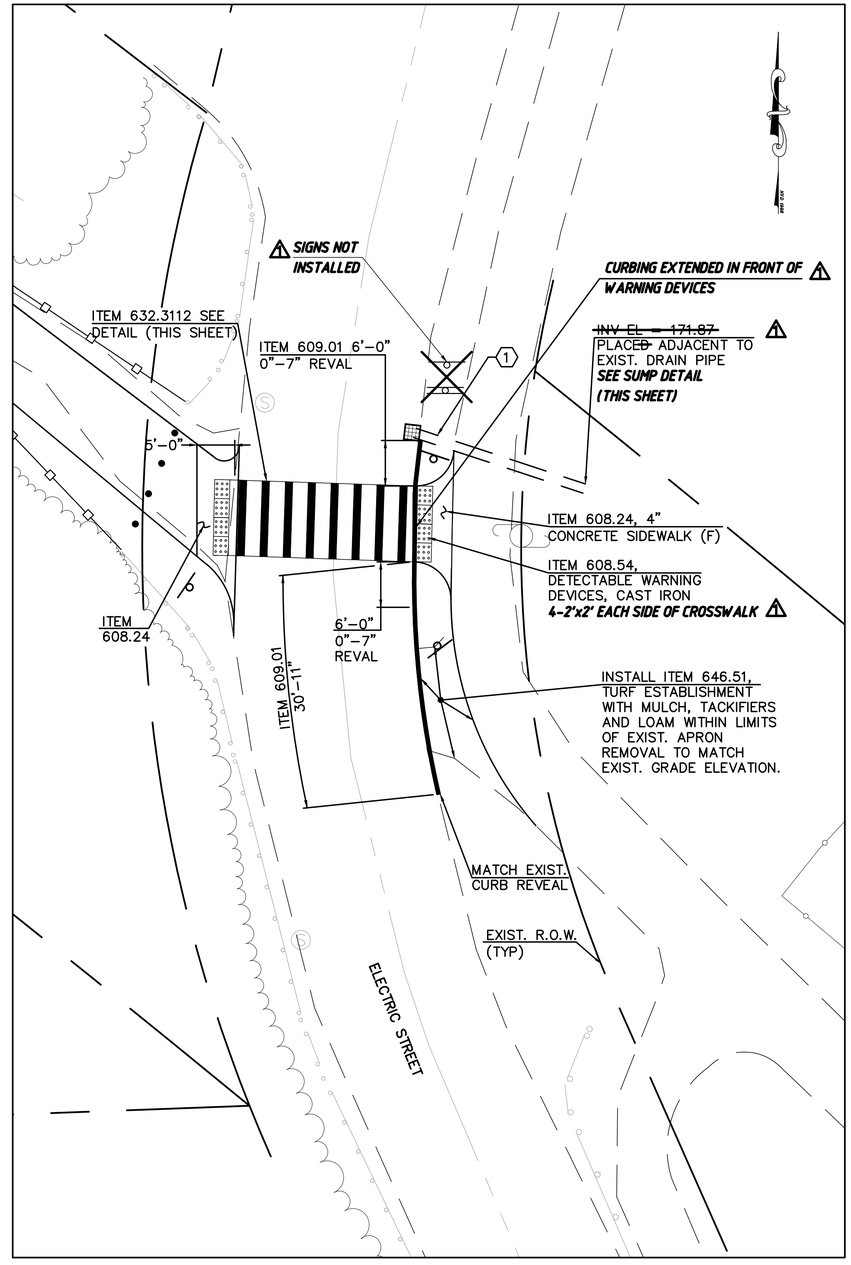

PROPOSED

SCALE: 1" = 10'

DRAINAGE NOTES:

(1) CONSTRUCT 27'x~~15"~~ 12" CPE DRAIN PIPE.
CONSTRUCT ~~4' DIA. CB B.~~ DROP INLET TYPE B
12"~~15"~~ INV. OUT EL= 172.00
GRATE EL= 174.67

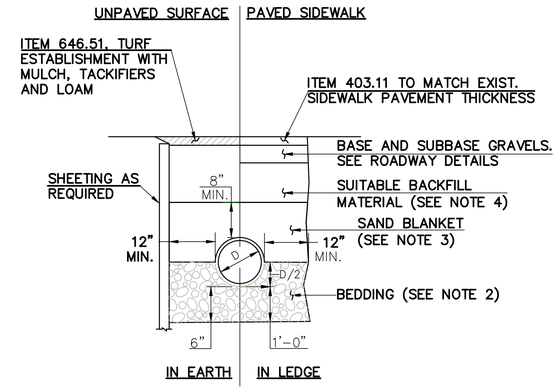

TRENCH – DRAIN PIPE

NOT TO SCALE

DRIAN PIPES TRENCH NOTES:

1. ORDERED EXCAVATION OF UNSUITABLE MATERIAL BELOW GRADE: BACKFILL AS STATED IN THE STANDARD SPECIFICATIONS OR AS SHOWN ON THE DRAWINGS.
2. BEDDING: CRUSHED STONE (SEE SPECIAL PROVISIONS).
3. SAND BLANKET: SAND (SEE SPECIAL PROVISIONS).
4. SUITABLE BACKFILL MATERIAL: SEE STANDARD SPECIFICATIONS FOR MATERIAL AND COMPACTION
5. MINIMUM COVER: NOT LESS THAN 5 FEET, PIPE TO BE DEEPER IF NECESSARY TO AVOID CONFLICTS WITH WATER, SEWER, OR OTHER UTILITIES.
6. SHEETING IF REQUIRED: WHERE SHEETING IS PLACED ALONGSIDE THE PIPE AND EXTENDS BELOW MID–DIAMETER, IT SHALL BE CUT OFF AND LEFT IN PLACE TO AN ELEVATION 1 FOOT ABOVE THE TOP OF THE PIPE. WHERE SHEETING IS ORDERED BY THE ENGINEER TO BE LEFT IN PLACE, IT SHALL BE CUT OFF AT LEAST 3 FEET BELOW FINISHED GRADE, BUT NOT LESS THAN 1 FOOT ABOVE THE TOP OF THE PIPE.
7. FOR UNPAVED CONSTRUCTION: : BACKFILL OR FILL SHALL BE MOUNDED TO A HEIGHT OF 6 INCHES ABOVE THE ORIGINAL GROUND SURFACE.

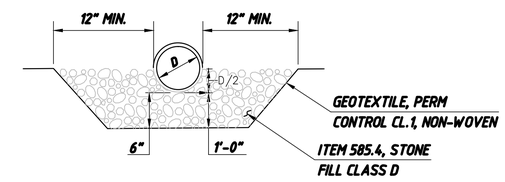

SUMP DETAIL

NOT TO SCALE

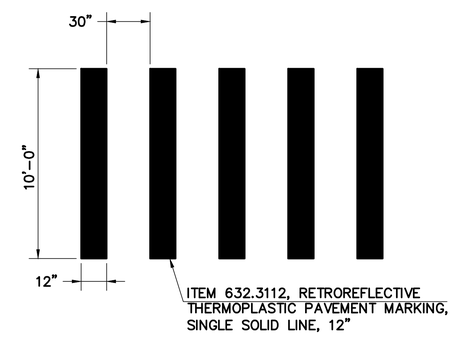

CROSSWALK MARKING DETAIL

NOT TO SCALE

I HEREBY CERTIFY THAT TO THE BEST OF MY KNOWLEDGE, BASED UPON CONSTRUCTION RECORDS, THAT ALL WORK SHOWN IN THESE DRAWINGS HAS BEEN COMPLETED AS SHOWN.

HOYLE, TANNER & ASSOCIATES, INC.

SIGNED NOVEMBER 2015

NOTE: WORDING CONTAINED HEREON IS UNDERSTOOD TO BE PAST TENSE.

REV.	DESCRIPTION	DRW. BY	CHKD. BY	DATE
1	RECORD COPY REVISIONS	TAG	PCI	11–2015

This document is prepared as an instrument of service and shall remain the property of Hoyle, Tanner. It may not be used, reproduced, disseminated or transferred in any manner, including electronically, for any other purpose than this project, without the written permission of Hoyle, Tanner.

DECEMBER 2014

DESIGN BY: JCR

DRAWN BY: PBD / TAG

CHKD. BY: STJ

SCALE: AS SHOWN

Hoyle, Tanner & Associates, Inc.
150 Dow Street, Manchester, NH 03101-1227
Tel (603) 669-5555 · Fax (603) 669-4168
Webpage: www.hoyletanner.com

CITY OF MANCHESTER
MANCHESTER, NEW HAMPSHIRE

PISCATAQUOG RIVER TRAIL PHASE III–A

EXISTING AND PROPOSED CROSSWALK DETAIL

PROJECT NO.: 093143

FILE NAME:

LAYOUT NAME: AB093143CDTL

SHEET NO.

11

SHEET 11 OF 27

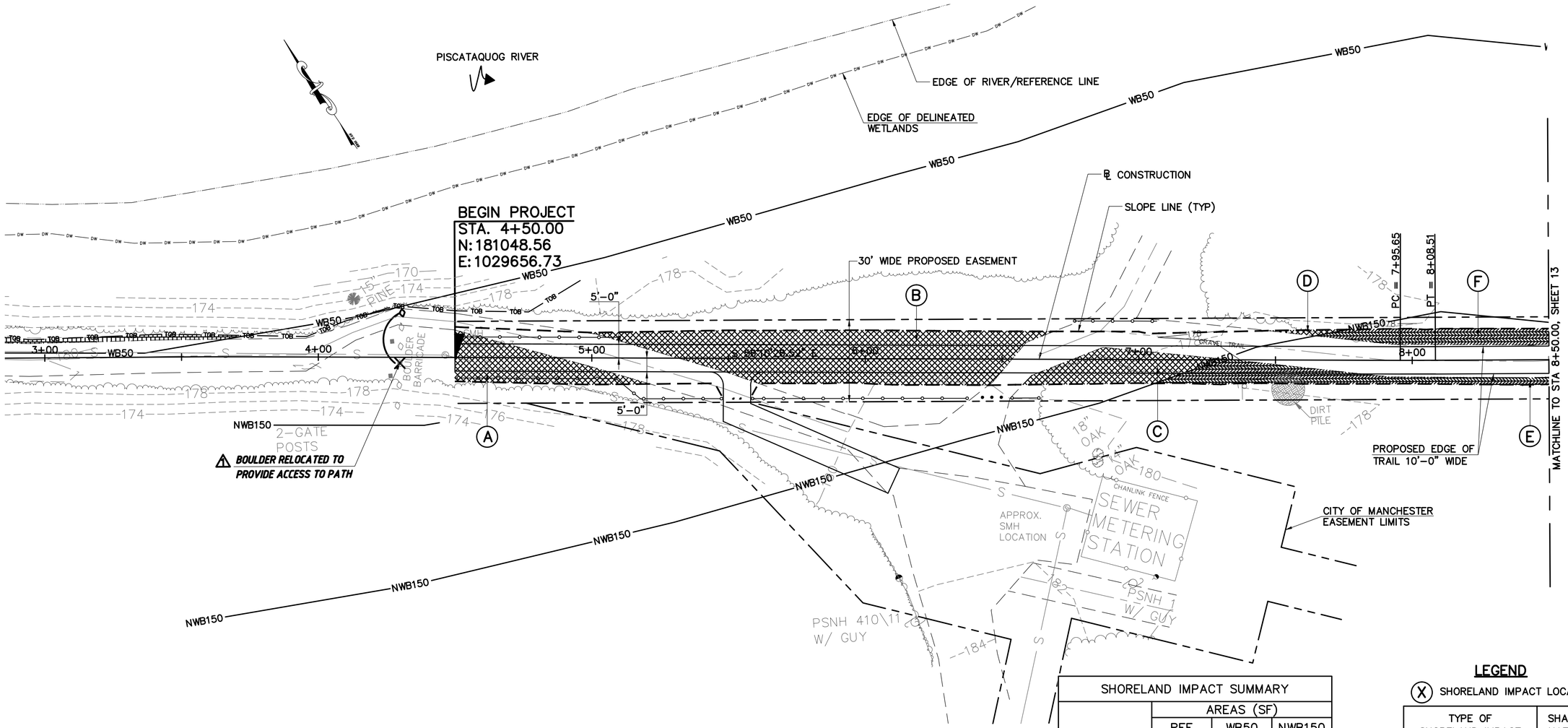

GENERAL IMPACT NOTES:

(1) IMPACTS

PERMANENT BANK OF RIVER IMPACTS = 928 SF
TEMPORARY BANK OF RIVER IMPACTS = 0 SF
PERMANENT WETLAND IMPACTS = 0 SF
TEMPORARY WETLAND IMPACTS = 0 SF
PERMANENT BED OF RIVER IMPACTS = 0 SF
TEMPORARY BED OF RIVER IMPACTS = 661 SF
TOTAL PERMANENT IMPACTS = 928 SF
TOTAL TEMPORARY IMPACTS = 661 SF
FILL BELOW ORDINARY HIGH WATER = 0 CY

(2) THE CONTRACTOR SHALL BE RESPONSIBLE FOR IMPLEMENTING AN EROSION AND SEDIMENT CONTROL PLAN IN ACCORDANCE WITH THE "NEW HAMPSHIRE STORMWATER MANUAL, VOLUME 3, EROSION AND SEDIMENT CONTROL DURING CONSTRUCTION" BY THE NEW HAMPSHIRE DEPARTMENT OF ENVIRONMENTAL SERVICES.

SITE PLAN ⚠

SCALE: 1" = 20'-0"

20 0 10 20 40

SHORELAND IMPACT SUMMARY			
LOCATION	AREAS (SF)		
	REF TO WB50	WB50 TO NWB150	NWB150 TO PS250
A		700	
B		2413	
C		595	
D		32	
E			762
F			584
G		672	
H		750	
I	242		
J		107	
K	1073		
L	942		
M	550		
N	57		
O	68		
P		1233	
Q		817	

TOTAL REF TO WB50 = 2932 SF
TOTAL WB50 TO NWB150 = 7319 SF
TOTAL NWB150 TO PS250 = 1346 SF
TOTAL IMPACTS REF TO PS250 = 11597 SF

LEGEND

(X) SHORELAND IMPACT LOCATION

TYPE OF SHORELAND IMPACT	SHADING/ HATCHING
REF TO WB50	
WB50 TO NWB150	
WB50 TO NWB150	
WETLANDS JURISDICTION PERMANENT IMPACT	
WETLANDS JURISDICTION TEMPORARY IMPACT	

DW — DELINEATED WETLANDS
TOB — TOP OF BANK
WB50 — WATERFRONT BUFFER LINE
NWB150 — NATURAL WOODLAND BUFFER LINE
PS250 — PROTECTED SHORELAND LINE

I HEREBY CERTIFY THAT TO THE BEST OF MY KNOWLEDGE, BASED UPON CONSTRUCTION RECORDS, THAT ALL WORK SHOWN IN THESE DRAWINGS HAS BEEN COMPLETED AS SHOWN.

HOYLE, TANNER & ASSOCIATES, INC.

SIGNED _____ NOVEMBER 2015

NOTE: WORDING CONTAINED HEREON IS UNDERSTOOD TO BE PAST TENSE.

REV.	DESCRIPTION	DRW BY	CHKD BY	DATE
1	RECORD COPY REVISIONS	TAG	GPC	11-2015

This document is prepared as an instrument of service and shall remain the property of Hoyle, Tanner. It may not be used, reproduced, disseminated or transferred in any manner, including electronically, for any other purpose than this project, without the written permission of Hoyle, Tanner.

DECEMBER 2014

DESIGN BY: JCR
DRAWN BY: PBD / TAG
CHKD. BY: STJ
SCALE: AS SHOWN

Hoyle, Tanner & Associates, Inc.
150 Dow Street, Manchester, NH 03101-1227
Tel (603) 669-5555 · Fax (603) 669-4168
Webpage: www.hoyletanner.com

CITY OF MANCHESTER
MANCHESTER, NEW HAMPSHIRE

PISCATAQUOG RIVER TRAIL PHASE III-A

SITE PLAN (1 OF 3)

PROJECT NO.: 093143
FILE NAME:
LAYOUT NAME: AB093143-SITE

SHEET NO.
12
SHEET 12 OF 27

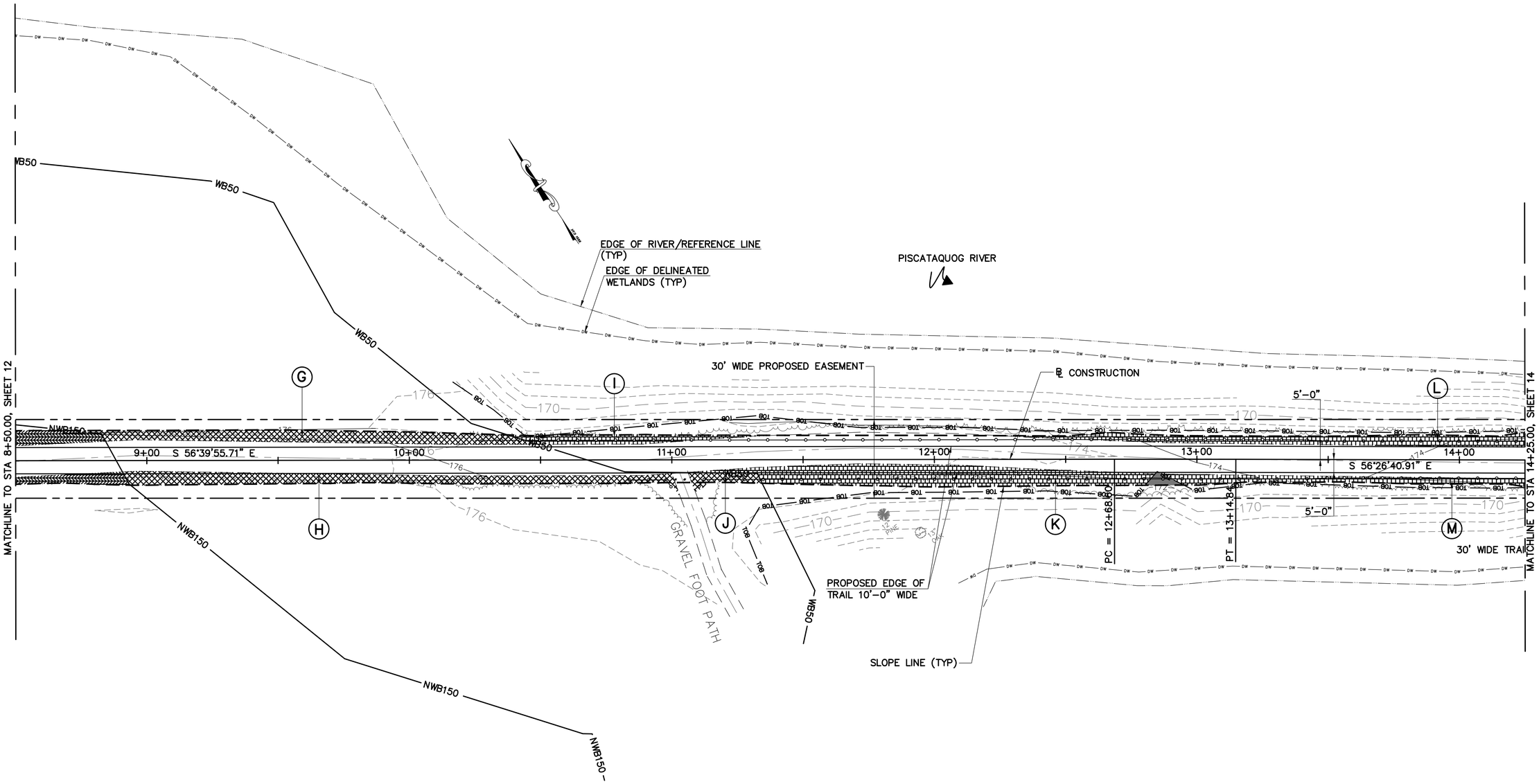

SITE PLAN

SCALE: 1" = 20'-0"

20 0 10 20 40

PLAN NOTE:

1. SEE SHEET 12 FOR NOTES, LEGEND AND SHORELAND IMPACT SUMMARY TABLE.

I HEREBY CERTIFY THAT TO THE BEST OF MY KNOWLEDGE, BASED UPON CONSTRUCTION RECORDS, THAT ALL WORK SHOWN IN THESE DRAWINGS HAS BEEN COMPLETED AS SHOWN.

HOYLE, TANNER & ASSOCIATES, INC.

SIGNED _____ NOVEMBER 2015

NOTE: WORDING CONTAINED HEREON IS UNDERSTOOD TO BE PAST TENSE.

REV.	DESCRIPTION	DRW BY	CHKD BY	DATE

This document is prepared as an instrument of service and shall remain the property of Hoyle, Tanner. It may not be used, reproduced, disseminated or transferred in any manner, including electronically, for any other purpose than this project, without the written permission of Hoyle, Tanner.

DECEMBER 2014

DESIGN BY: JCR

DRAWN BY: PBD / TAG

CHKD. BY: STJ

SCALE: AS SHOWN

Hoyle, Tanner & Associates, Inc.
150 Dow Street, Manchester, NH 03101-1227
Tel (603) 669-5555 · Fax (603) 669-4168
Webpage: www.hoyletanner.com

CITY OF MANCHESTER
MANCHESTER, NEW HAMPSHIRE

PISCATAQUOG RIVER TRAIL PHASE III-A

SITE PLAN (2 OF 3)

PROJECT NO.: 093143

FILE NAME:

LAYOUT NAME: AB093143-SITE

SHEET NO.

13

SHEET 13 OF 27

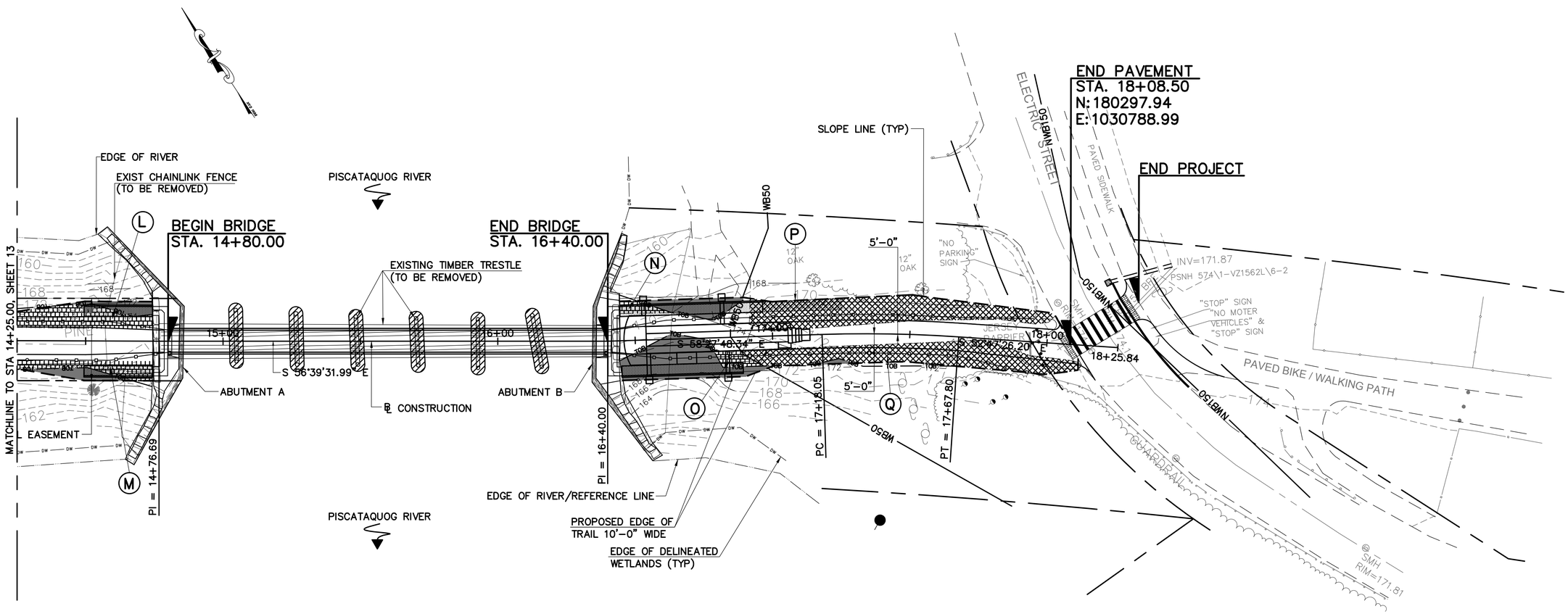

SITE PLAN

SCALE: 1" = 20'-0"

20 0 10 20 40

PLAN NOTE:

1. SEE SHEET 12 FOR NOTES, LEGEND AND SHORELAND IMPACT SUMMARY TABLE.

I HEREBY CERTIFY THAT TO THE BEST OF MY KNOWLEDGE, BASED UPON CONSTRUCTION RECORDS, THAT ALL WORK SHOWN IN THESE DRAWINGS HAS BEEN COMPLETED AS SHOWN.

HOYLE, TANNER & ASSOCIATES, INC.

SIGNED _____ NOVEMBER 2015

NOTE: WORDING CONTAINED HEREON IS UNDERSTOOD TO BE PAST TENSE.

REV.	DESCRIPTION	DRW BY	CHKD BY	DATE

This document is prepared as an instrument of service and shall remain the property of Hoyle, Tanner. It may not be used, reproduced, disseminated or transferred in any manner, including electronically, for any other purpose than this project, without the written permission of Hoyle, Tanner.

DECEMBER 2014

DESIGN BY: JCR

DRAWN BY: PBD / TAG

CHKD. BY: STJ

SCALE: AS SHOWN

Hoyle, Tanner & Associates, Inc.
150 Dow Street, Manchester, NH 03101-1227
Tel (603) 669-5555 · Fax (603) 669-4168
Webpage: www.hoyletanner.com

CITY OF MANCHESTER
MANCHESTER, NEW HAMPSHIRE

PISCATAQUOG RIVER TRAIL PHASE III-A

SITE PLAN (3 OF 3)

PROJECT NO.: 093143

FILE NAME:

LAYOUT NAME: AB093143-SITE

SHEET NO.

14

SHEET 14 OF 27

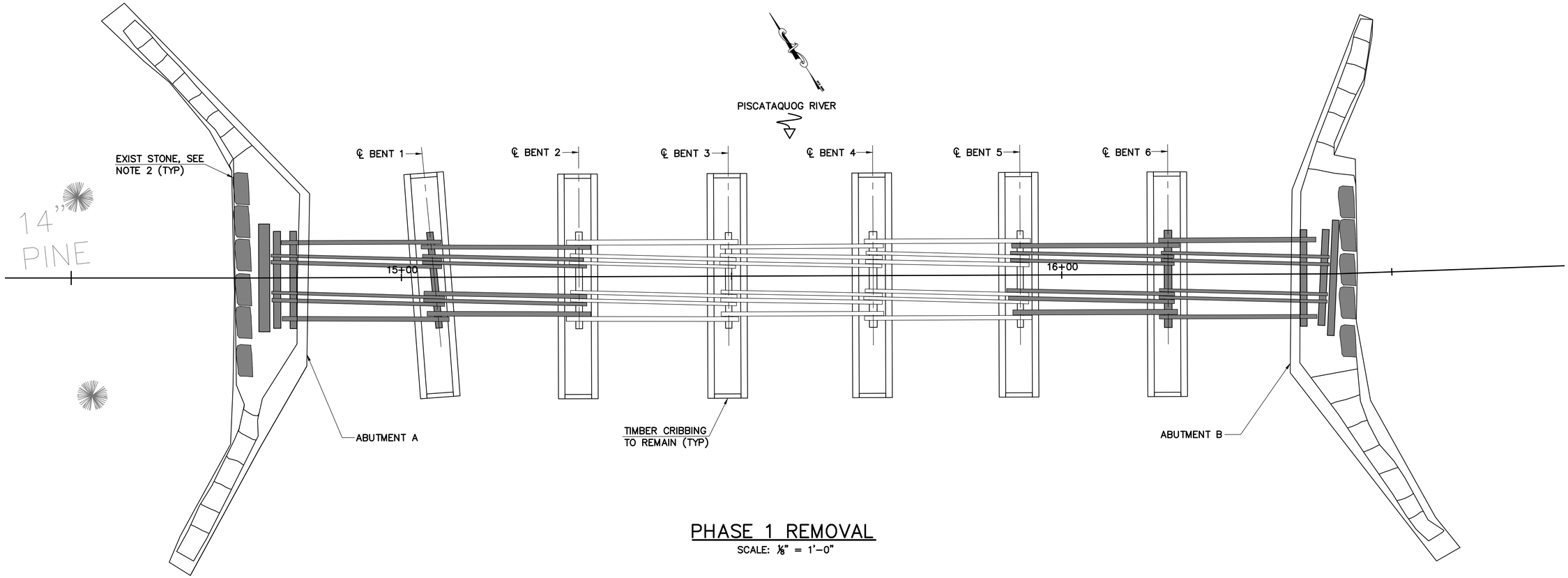

PHASE 1 REMOVAL

SCALE: ⅛" = 1'–0"

LEGEND

ITEM TO BE REMOVED

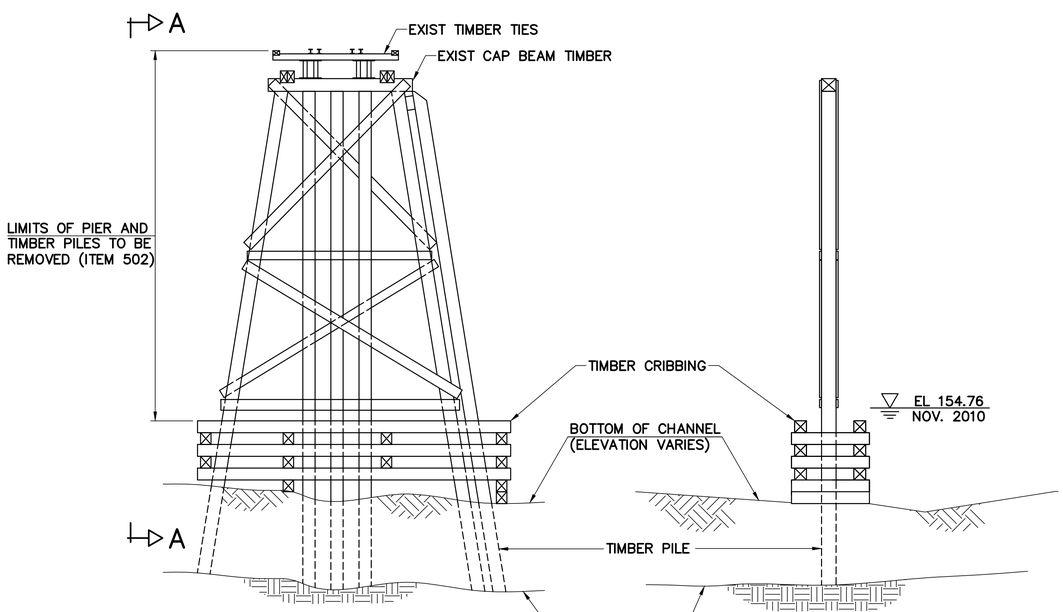

TYPICAL PIER

SCALE: ¼" = 1'–0"

SECTION A–A

SCALE: ¼" = 1'–0"

PHASE 1 RECOMMENDED BRIDGE CONSTRUCTION SEQUENCE

(1) IN PHASE 1, REMOVE EXISTING TIMBER TIES, STEEL STRINGERS AND CAP BEAMS AS INDICATED. REMOVE BENTS 1 AND 6. IF TIMBER PILES CANNOT BE REMOVED COMPLETELY, THEY SHALL BE CUT FLUSH WITH TOP OF TIMBER CRIBBING. ALL UNSALVAGEABLE TIMBER SHALL BE PROPERLY DISPOSED OF. REMOVE EXISTING STONES AT ABUTMENT A AND B AS INDICATED ABOVE. ALL WORK SHALL BE PAID UNDER ITEM 502. ALL STEEL MEMBERS SHALL BE SALVAGED TO THE CITY OF MANCHESTER, DEPARTMENT OF PUBLIC WORKS LOCATED AT 475 VALLEY ST, MANCHESTER NH.

(2) REMOVED STONES SHALL BE RELOCATED BY THE CONTRACTOR TO STA. 13+00 FOR USE IN STONE RETAINING WALL, SEE SHEET 8 FOR DETAILS. ALL COST INCLUDED IN ITEM 502.

SCALE: ⅛" = 1'–0"

0 4' 8' 16' 24'

SCALE: ¼" = 1'–0"

0 2' 4' 8' 12'

I HEREBY CERTIFY THAT TO THE BEST OF MY KNOWLEDGE, BASED UPON CONSTRUCTION RECORDS, THAT ALL WORK SHOWN IN THESE DRAWINGS HAS BEEN COMPLETED AS SHOWN.

HOYLE, TANNER & ASSOCIATES, INC.

SIGNED _____ NOVEMBER 2015

NOTE: WORDING CONTAINED HEREON IS UNDERSTOOD TO BE PAST TENSE.

REV.	DESCRIPTION	DRW BY	CHKD BY	DATE

This document is prepared as an instrument of service and shall remain the property of Hoyle, Tanner. It may not be used, reproduced, disseminated or transferred in any manner, including electronically, for any other purpose than this project, without the written permission of Hoyle, Tanner.

DECEMBER 2014

DESIGN BY: JCR

DRAWN BY: PBD / TAG

CHKD. BY: STJ

SCALE: AS SHOWN

Hoyle, Tanner & Associates, Inc.
150 Dow Street, Manchester, NH 03101-1227
Tel (603) 669-5555 · Fax (603) 669-4168
Webpage: www.hoyletanner.com

CITY OF MANCHESTER
MANCHESTER, NEW HAMPSHIRE

PISCATAQUOG RIVER TRAIL PHASE III–A

RECOMMENDED BRIDGE CONSTRUCTION SEQUENCE (1 OF 2)

PROJECT NO.: 093143

FILE NAME:

LAYOUT NAME: AB093143DM01

SHEET NO.

15

SHEET 15 OF 27

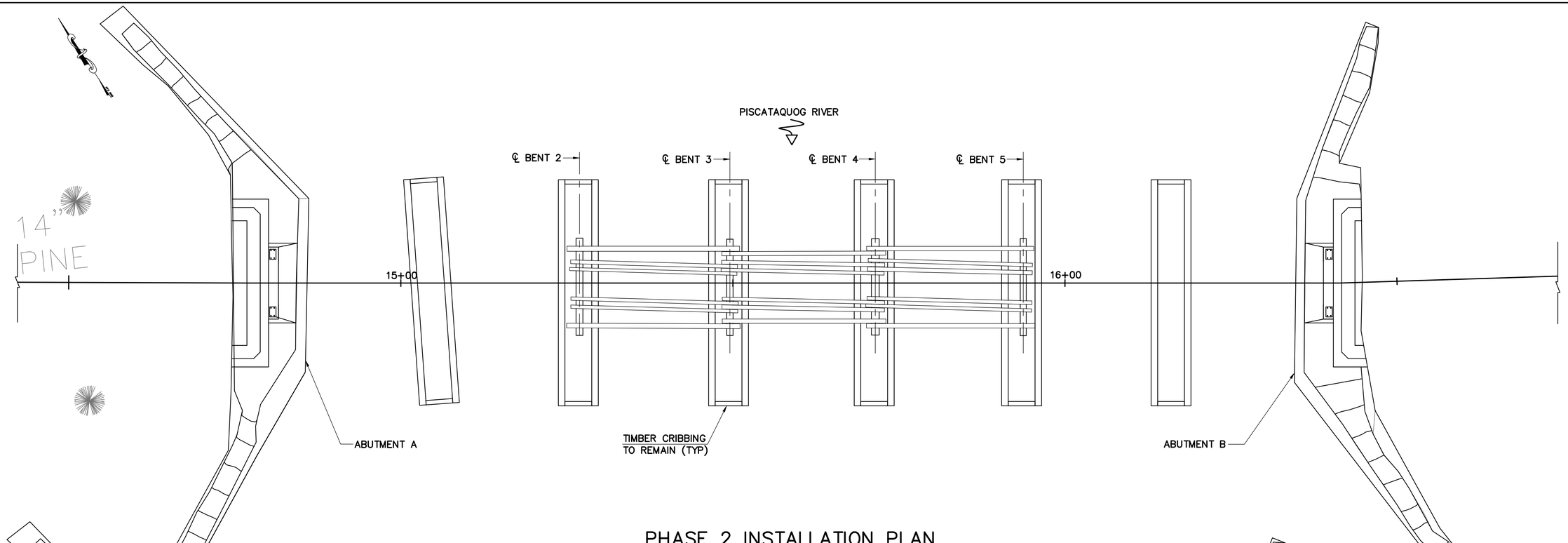

PHASE 2 INSTALLATION PLAN

SCALE: ⅛" = 1'–0"

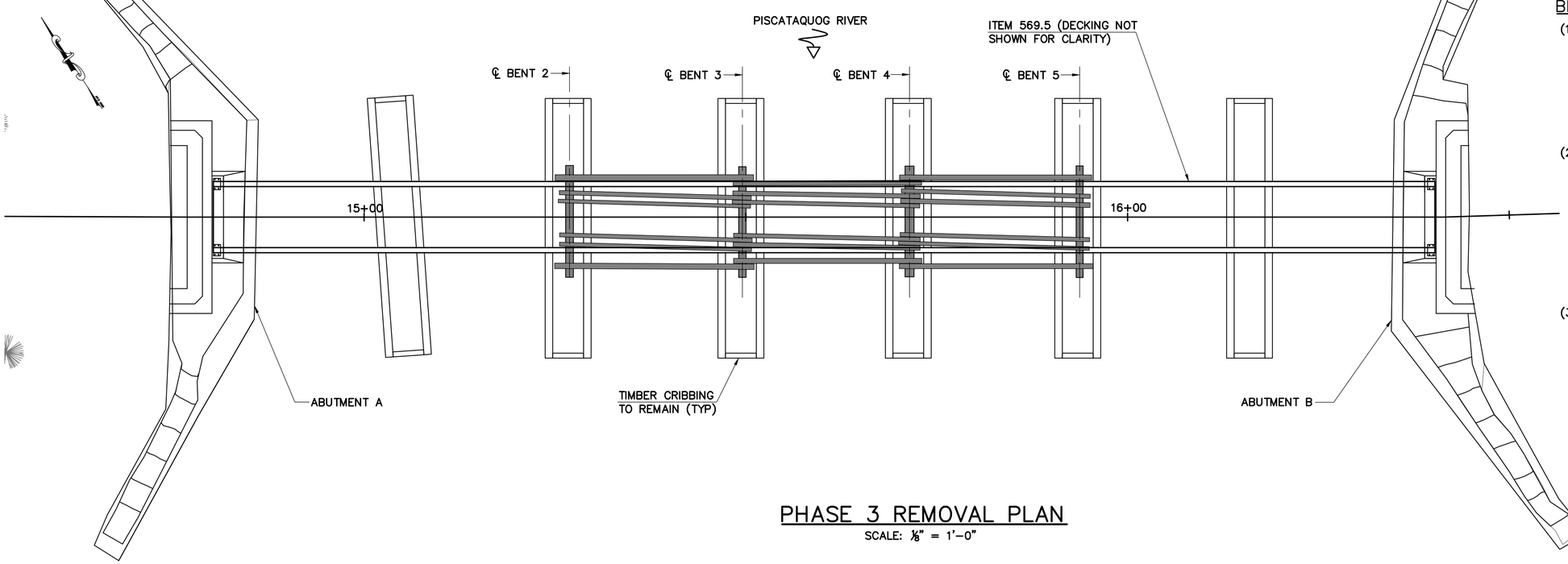

PHASE 3 REMOVAL PLAN

SCALE: ⅛" = 1'–0"

PHASE 2 RECOMMENDED BRIDGE CONSTRUCTION SEQUENCE

(1) IN PHASE 2, CONSTRUCT CAST–IN–PLACE ABUTMENTS AND ERECT THE ENGINEERED PEDESTRIAN BRIDGE. THE CENTER TRESTLE STRUCTURE MAY BE UTILIZED FOR TEMPORARY SUPPORT OF THE PEDESTRIAN BRIDGE IF EVALUATED AS PART OF THE ERECTION PLAN. ALL COSTS FOR THE ERECTION PROCEDURE SHALL BE PAID UNDER ITEM 569.5.

(2) AFTER ALL BOLTED CONNECTIONS BETWEEN THE SEGMENTS OF THE ENGINEERED PEDESTRIAN BRIDGE HAVE BEEN MADE AND THE BRIDGE IS SUPPORTED AT THE BEARING LOCATIONS, REMOVE REMAINING TIMBER TIES, STEEL STRINGERS, TIMBER CAP BEAMS AND TIMBER BENTS AS INDICATED IN PHASE 3. ALL UNSALVAGEABLE TIMBER SHALL BE PROPERLY DISPOSED OF. ALL WORK FOR THIS PHASE SHALL BE PAID UNDER ITEM 502.

(3) ANCHOR RODS AT ABUTMENT A AND B SHALL BE DRILLED AND GROUTED ONCE THE ENGINEERED PEDESTRIAN BRIDGE IS ERECTED.

LEGEND

ITEM TO BE REMOVED

SCALE: ⅛" = 1'–0"

0 4' 8' 16' 24'

I HEREBY CERTIFY THAT TO THE BEST OF MY KNOWLEDGE, BASED UPON CONSTRUCTION RECORDS, THAT ALL WORK SHOWN IN THESE DRAWINGS HAS BEEN COMPLETED AS SHOWN.

HOYLE, TANNER & ASSOCIATES, INC.

SIGNED _____ NOVEMBER 2015

NOTE: WORDING CONTAINED HEREON IS UNDERSTOOD TO BE PAST TENSE.

REV.	DESCRIPTION	DRW BY	CHKD BY	DATE

This document is prepared as an instrument of service and shall remain the property of Hoyle, Tanner. It may not be used, reproduced, disseminated or transferred in any manner, including electronically, for any other purpose than this project, without the written permission of Hoyle, Tanner.

DECEMBER 2014

DESIGN BY: JCR

DRAWN BY: PBD / TAG

CHKD. BY: STJ

SCALE: AS SHOWN

Hoyle, Tanner & Associates, Inc.
150 Dow Street, Manchester, NH 03101-1227
Tel (603) 669-5555 · Fax (603) 669-4168
Webpage: www.hoyletanner.com

CITY OF MANCHESTER
MANCHESTER, NEW HAMPSHIRE

PISCATAQUOG RIVER TRAIL PHASE III–A

RECOMMENDED BRIDGE CONSTRUCTION SEQUENCE (2 OF 2)

PROJECT NO.: 093143

FILE NAME:

LAYOUT NAME: AB093143DM02

SHEET NO.

16

WORKING POINT COORDINATES		
WP #	NORTHING	EASTING
1	180469.0062	1030508.1389
2	180479.5533	1030515.0779
3	180490.1004	1030522.0169
4	180401.9775	1030655.9615
5	180391.4348	1030649.0254
6	180380.8833	1030642.0836

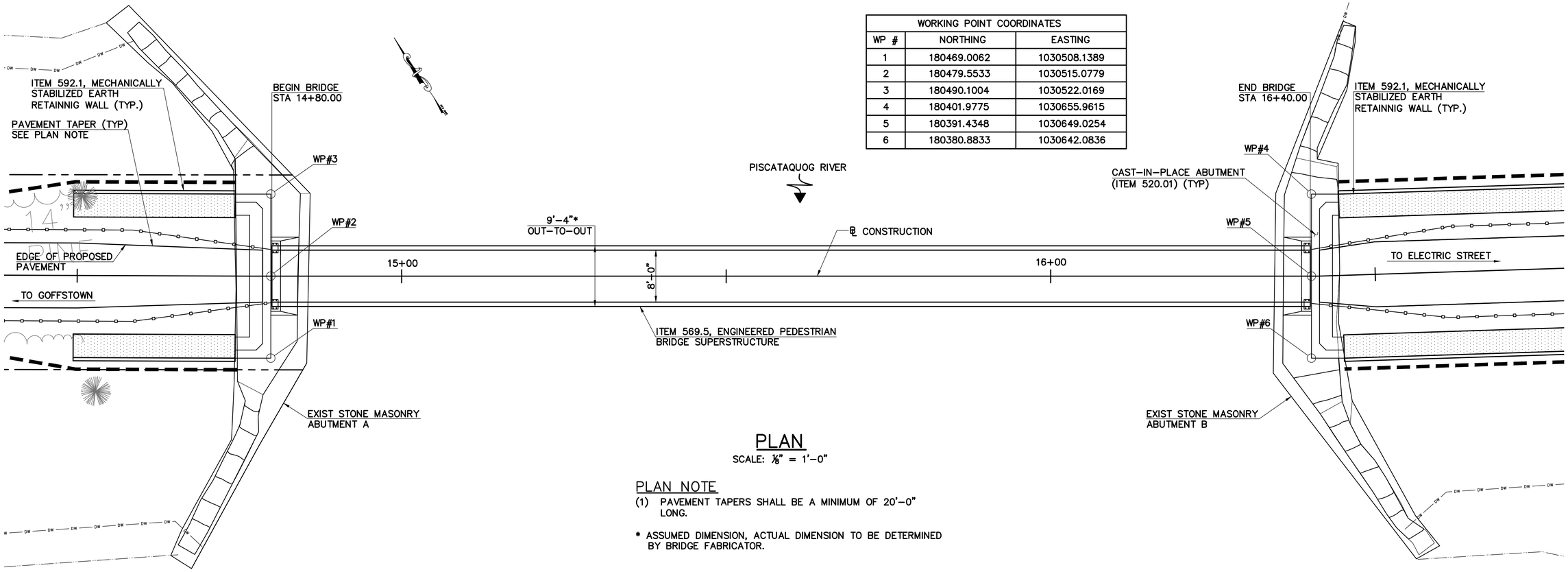

PLAN

SCALE: ⅛" = 1'-0"

PLAN NOTE

(1) PAVEMENT TAPERS SHALL BE A MINIMUM OF 20'-0" LONG.

* ASSUMED DIMENSION, ACTUAL DIMENSION TO BE DETERMINED BY BRIDGE FABRICATOR.

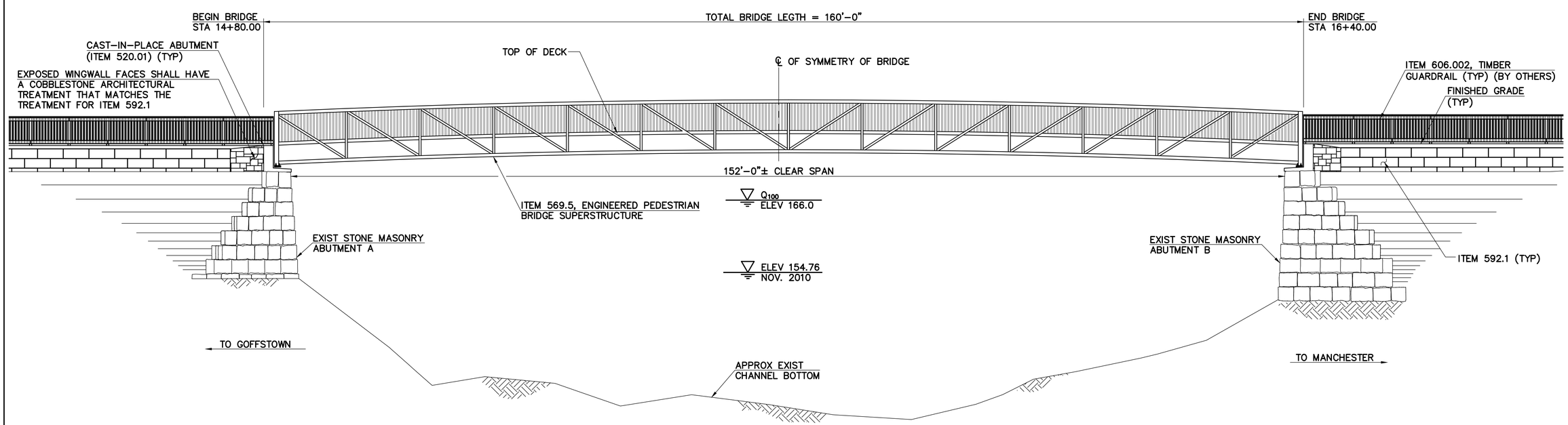

ELEVATION

SCALE: ⅛" = 1'-0"

SCALE: ⅛" = 1'-0"

0 4 8 12

I HEREBY CERTIFY THAT TO THE BEST OF MY KNOWLEDGE, BASED UPON CONSTRUCTION RECORDS, THAT ALL WORK SHOWN IN THESE DRAWINGS HAS BEEN COMPLETED AS SHOWN.

HOYLE, TANNER & ASSOCIATES, INC.

SIGNED _____ NOVEMBER 2015

NOTE: WORDING CONTAINED HEREON IS UNDERSTOOD TO BE PAST TENSE.

REV.	DESCRIPTION	DRW BY	CHKD BY	DATE

This document is prepared as an instrument of service and shall remain the property of Hoyle, Tanner. It may not be used, reproduced, disseminated or transferred in any manner, including electronically, for any other purpose than this project, without the written permission of Hoyle, Tanner.

DECEMBER 2014

DESIGN BY: JCR

DRAWN BY: PBD / TAG

CHKD. BY: STJ

SCALE: AS SHOWN

Hoyle, Tanner & Associates, Inc.
150 Dow Street, Manchester, NH 03101-1227
Tel (603) 669-5555 · Fax (603) 669-4168
Webpage: www.hoyletanner.com

CITY OF MANCHESTER
MANCHESTER, NEW HAMPSHIRE

PISCATAQUOG RIVER TRAIL PHASE III-A

GENERAL PLAN AND ELEVATION

PROJECT NO.: 093143

FILE NAME:

LAYOUT NAME: AB093143GPE

SHEET NO.

17

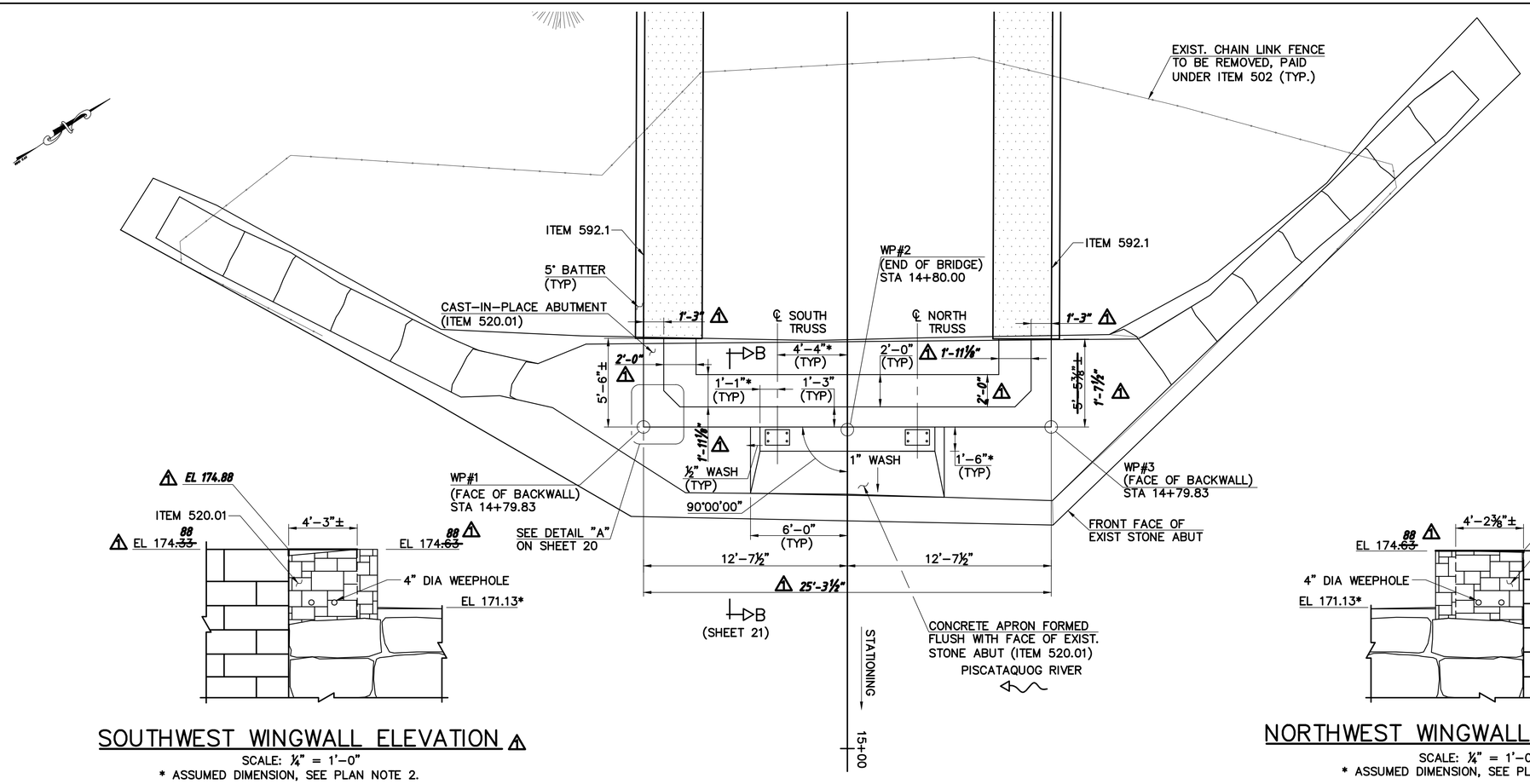

ABUTMENT A PLAN

SCALE: ¼" = 1'-0"

* ASSUMED DIMENSION, SEE PLAN NOTE 2.

SOUTHWEST WINGWALL ELEVATION

SCALE: ¼" = 1'-0"

* ASSUMED DIMENSION, SEE PLAN NOTE 2.

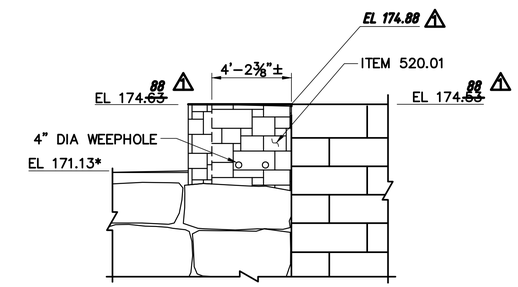

NORTHWEST WINGWALL ELEVATION

SCALE: ¼" = 1'-0"

* ASSUMED DIMENSION, SEE PLAN NOTE 2.

PLAN NOTE

(1) ALL EXPOSED FACES OF THE EXISTING STONE ABUTMENT AND WINGWALLS SHALL BE CLEANED TO REMOVE ACCUMULATED SAND AND VEGETATION. THE COST OF THIS WORK SHALL BE PAID FOR UNDER ITEM 502.

(2) DIMENSIONS AND ELEVATIONS FOR THE PROPOSED CAST-IN-PLACE CONCRETE ABUTMENT ARE PROVIDED FOR BIDDING PURPOSES AND ARE BASED ON ASSUMED DIMENSIONS OF THE ENGINEERED PEDESTRIAN BRIDGE SUPERSTRUCTURE. ANY CHANGES TO DIMENSIONS AND ELEVATIONS BASED ON THE ACTUAL BRIDGE SUPERSTRUCTURE SHALL BE BROUGHT TO THE ATTENTION OF THE ENGINEER.

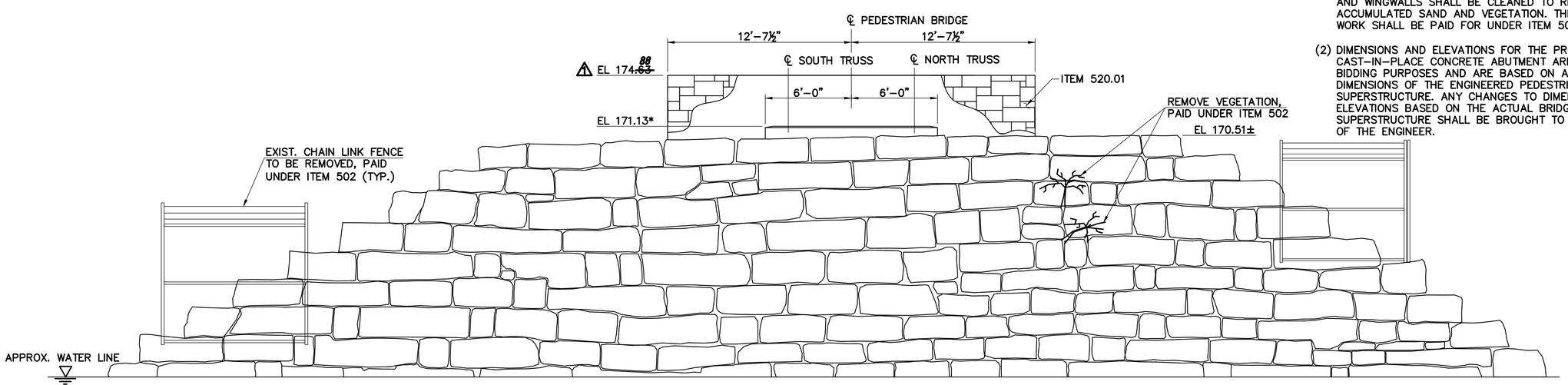

ABUTMENT A DEVELOPED ELEVATION

SCALE: ¼" = 1'-0"

* ASSUMED ELEVATION, SEE PLAN NOTE 2.

0 2' 4' 8' 12'

SCALE: ¼" = 1'-0"

I HEREBY CERTIFY THAT TO THE BEST OF MY KNOWLEDGE, BASED UPON CONSTRUCTION RECORDS, THAT ALL WORK SHOWN IN THESE DRAWINGS HAS BEEN COMPLETED AS SHOWN.

HOYLE, TANNER & ASSOCIATES, INC.

SIGNED _____ NOVEMBER 2015

NOTE: WORDING CONTAINED HEREON IS UNDERSTOOD TO BE PAST TENSE.

REV.	DESCRIPTION	DRW BY	CHKD BY	DATE
1	RECORD COPY REVISIONS	TAG	GPC	11-2015

This document is prepared as an instrument of service and shall remain the property of Hoyle, Tanner. It may not be used, reproduced, disseminated or transferred in any manner, including electronically, for any other purpose than this project, without the written permission of Hoyle, Tanner.

DECEMBER 2014

DESIGN BY: JCR

DRAWN BY: PBD / TAG

CHKD. BY: STJ

SCALE: AS SHOWN

Hoyle, Tanner & Associates, Inc.
150 Dow Street, Manchester, NH 03101-1227
Tel (603) 669-5555 · Fax (603) 669-4168
Webpage: www.hoyletanner.com

CITY OF MANCHESTER
MANCHESTER, NEW HAMPSHIRE

PISCATAQUOG RIVER TRAIL PHASE III-A

ABUTMENT A PLAN AND ELEVATION

PROJECT NO.: 093143

FILE NAME:

LAYOUT NAME: AB093143A-AB

SHEET NO.

18

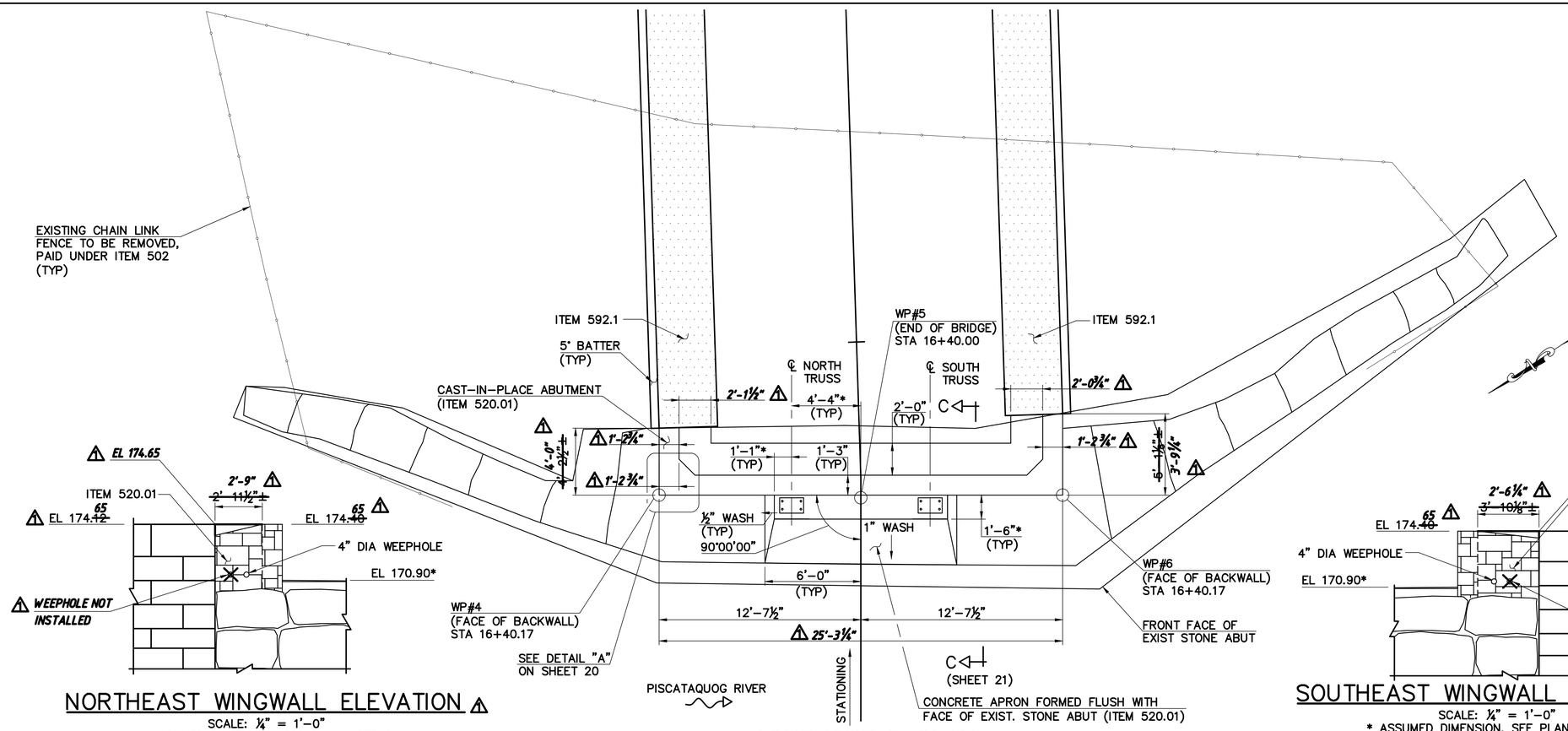

ABUTMENT B PLAN

SCALE: ¼" = 1'-0"

* ASSUMED DIMENSION, SEE PLAN NOTE 2.

NORTHEAST WINGWALL ELEVATION

SCALE: ¼" = 1'-0"

* ASSUMED DIMENSION, SEE PLAN NOTE 2.

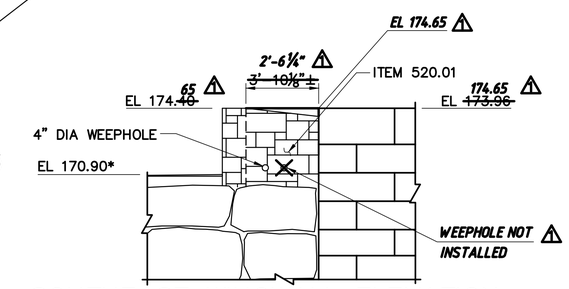

SOUTHEAST WINGWALL ELEVATION

SCALE: ¼" = 1'-0"

* ASSUMED DIMENSION, SEE PLAN NOTE 2.

PLAN NOTE

1. ALL EXPOSED FACES OF THE EXISTING STONE ABUTMENT AND WINGWALLS SHALL BE CLEANED TO REMOVE ACCUMULATED SAND AND VEGETATION. THE COST OF THIS WORK SHALL BE PAID FOR UNDER ITEM 502.
2. DIMENSIONS AND ELEVATIONS FOR THE PROPOSED CAST-IN-PLACE CONCRETE ABUTMENT ARE PROVIDED FOR BIDDING PURPOSES AND ARE BASED ON ASSUMED DIMENSIONS OF THE ENGINEERED PEDESTRIAN BRIDGE SUPERSTRUCTURE. ANY CHANGES TO DIMENSIONS AND ELEVATIONS BASED ON THE ACTUAL BRIDGE SUPERSTRUCTURE SHALL BE BROUGHT TO THE ATTENTION OF THE ENGINEER.

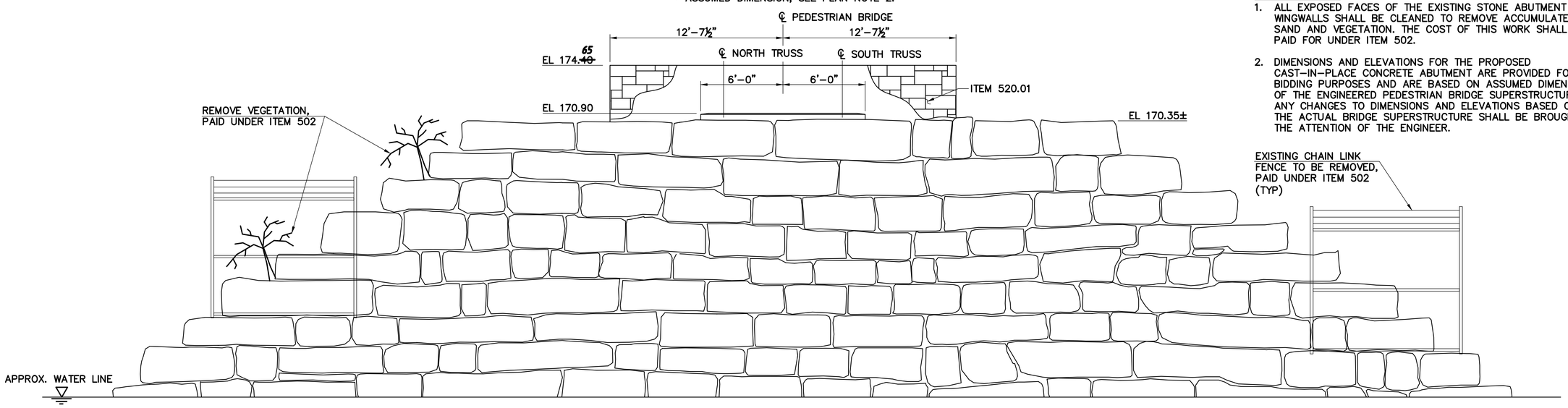

ABUTMENT B DEVELOPED ELEVATION

SCALE: ¼" = 1'-0"

* ASSUMED ELEVATION, SEE PLAN NOTE 2.

0 2' 4' 8' 12'

SCALE: ¼" = 1'-0"

I HEREBY CERTIFY THAT TO THE BEST OF MY KNOWLEDGE, BASED UPON CONSTRUCTION RECORDS, THAT ALL WORK SHOWN IN THESE DRAWINGS HAS BEEN COMPLETED AS SHOWN.

HOYLE, TANNER & ASSOCIATES, INC.

SIGNED _____ NOVEMBER 2015

NOTE: WORDING CONTAINED HEREON IS UNDERSTOOD TO BE PAST TENSE.

REV.	DESCRIPTION	DRW BY	CHKD BY	DATE
1	RECORD COPY REVISIONS	TAG	GPC	11-2015

This document is prepared as an instrument of service and shall remain the property of Hoyle, Tanner. It may not be used, reproduced, disseminated or transferred in any manner, including electronically, for any other purpose than this project, without the written permission of Hoyle, Tanner.

DECEMBER 2014

DESIGN BY: JCR

DRAWN BY: PBD / TAG

CHKD. BY: STJ

SCALE: AS SHOWN

Hoyle, Tanner & Associates, Inc.
150 Dow Street, Manchester, NH 03101-1227
Tel (603) 669-5555 · Fax (603) 669-4168
Webpage: www.hoyletanner.com

CITY OF MANCHESTER
MANCHESTER, NEW HAMPSHIRE

PISCATAQUOG RIVER TRAIL PHASE III-A

ABUTMENT B PLAN AND ELEVATION

PROJECT NO.: 093143

FILE NAME:

LAYOUT NAME: AB093143B-AB

SHEET NO.

19

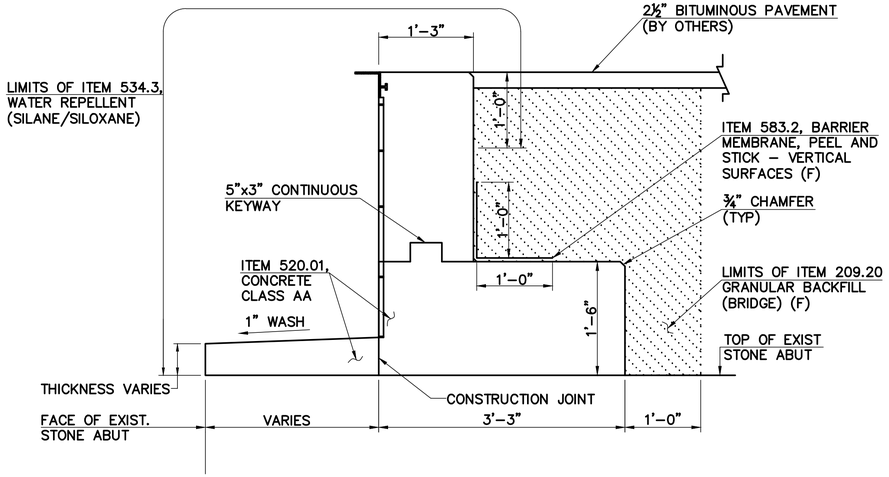

TYPICAL BACKWALL MASONRY SECTION

SCALE: 1" = 1'-0"

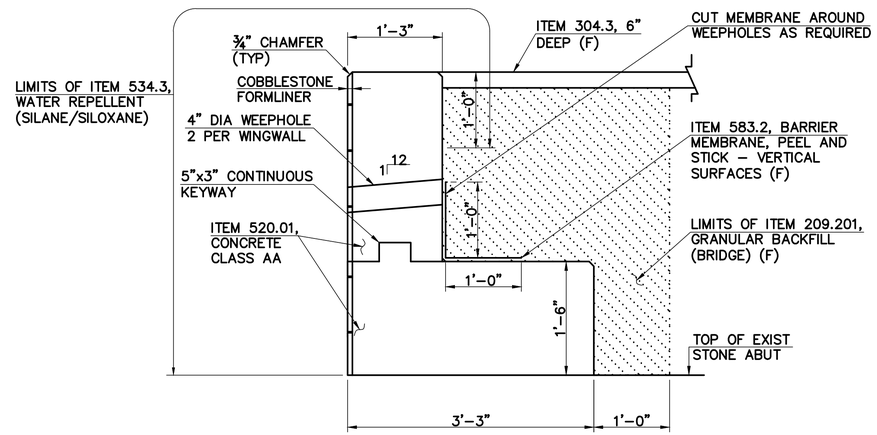

NOTE
WEEPHOLE INLET PROTECTION SHALL BE IN ACCORDANCE WITH SECTION 520.3.3 OF THE NHDOT STANDARD SPECIFICATIONS.

TYPICAL WINGWALL MASONRY SECTION

SCALE: 1" = 1'-0"

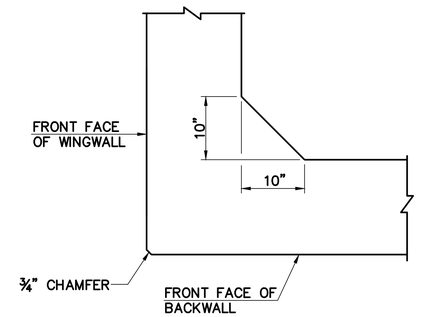

DETAIL "A"

SCALE: 1" = 1'-0"

NOTE
LEFT SIDE SHOWN, RIGHT SIDE OPPOSITE.

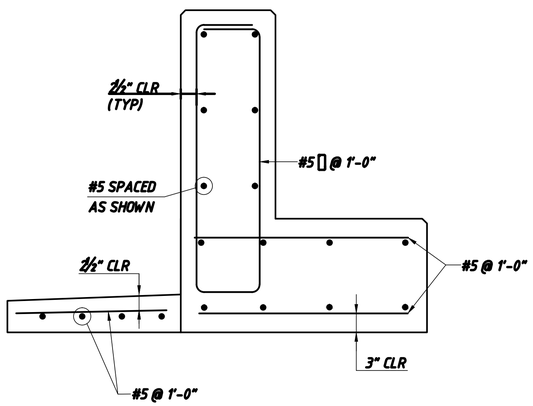

TYPICAL BACKWALL REINFORCING SECTION ⚠

SCALE: 1" = 1'-0"

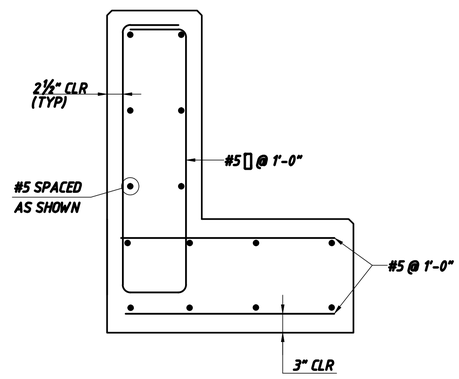

TYPICAL WINGWALL REINFORCING SECTION ⚠

SCALE: 1" = 1'-0"

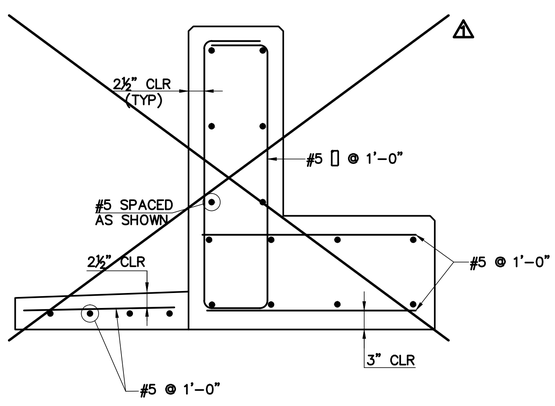

TYPICAL BACKWALL REINFORCING SECTION

SCALE: 1" = 1'-0"

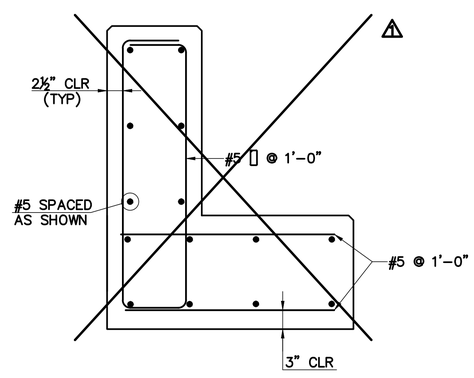

TYPICAL WINGWALL REINFORCING SECTION

SCALE: 1" = 1'-0"

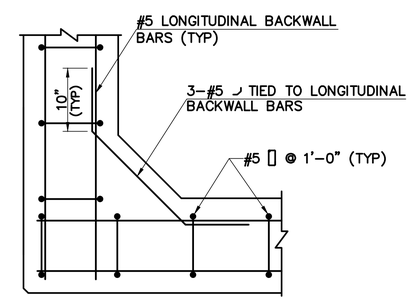

CORNER REINFORCING DETAIL

SCALE: 1" = 1'-0"

NOTE
LEFT SIDE SHOWN, RIGHT SIDE OPPOSITE.

NOTE
ALL REINFORCING STEEL TO BE EPOXY COATED AND PAID UNDER ITEM 544.31, REINFORCING STEEL, EPOXY COATED (CONTRACTOR DETAILED)

I HEREBY CERTIFY THAT TO THE BEST OF MY KNOWLEDGE, BASED UPON CONSTRUCTION RECORDS, THAT ALL WORK SHOWN IN THESE DRAWINGS HAS BEEN COMPLETED AS SHOWN.

HOYLE, TANNER & ASSOCIATES, INC.

SIGNED NOVEMBER 2015

NOTE: WORDING CONTAINED HEREON IS UNDERSTOOD TO BE PAST TENSE.

REV.	DESCRIPTION	DRW. BY	CHKD. BY	DATE
1	RECORD COPY REVISIONS	TAG	GPC	11-2015

This document is prepared as an instrument of service and shall remain the property of Hoyle, Tanner. It may not be used, reproduced, disseminated or transferred in any manner, including electronically, for any other purpose than this project, without the written permission of Hoyle, Tanner.

DECEMBER 2014

DESIGN BY: JCR

DRAWN BY: PBD / TAG

CHKD. BY: STJ

SCALE: AS SHOWN

Hoyle, Tanner & Associates, Inc.
150 Dow Street, Manchester, NH 03101-1227
Tel (603) 669-5555 · Fax (603) 669-4168
Webpage: www.hoyletanner.com

CITY OF MANCHESTER
MANCHESTER, NEW HAMPSHIRE

PISCATAQUOG RIVER TRAIL PHASE III-A

ABUTMENT MASONRY AND REINFORCING DETAILS

PROJECT NO.: 093143

FILE NAME:

LAYOUT NAME: AB093143ABDTL

SHEET NO.

20

SHEET 20 OF 27

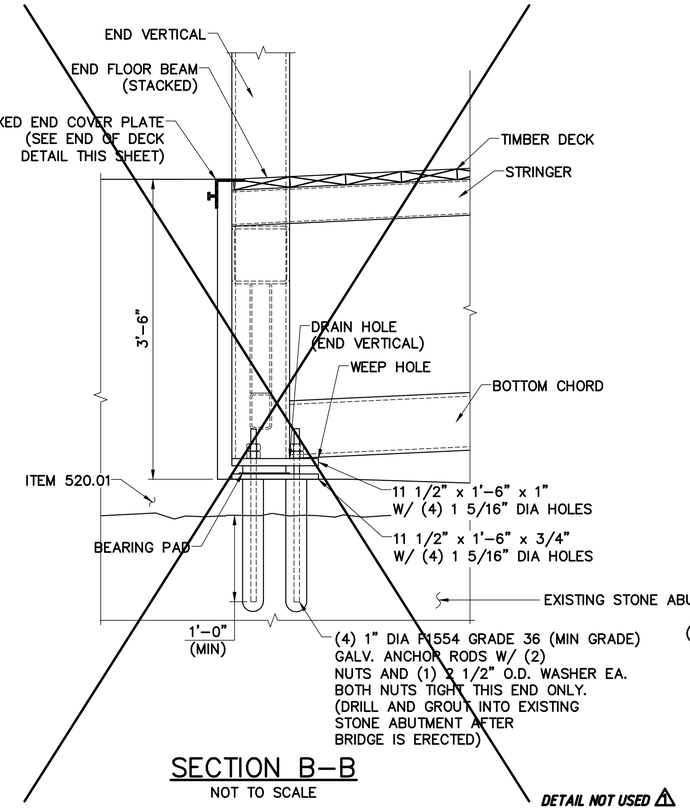

SECTION B–B
NOT TO SCALE

DETAIL NOT USED 1

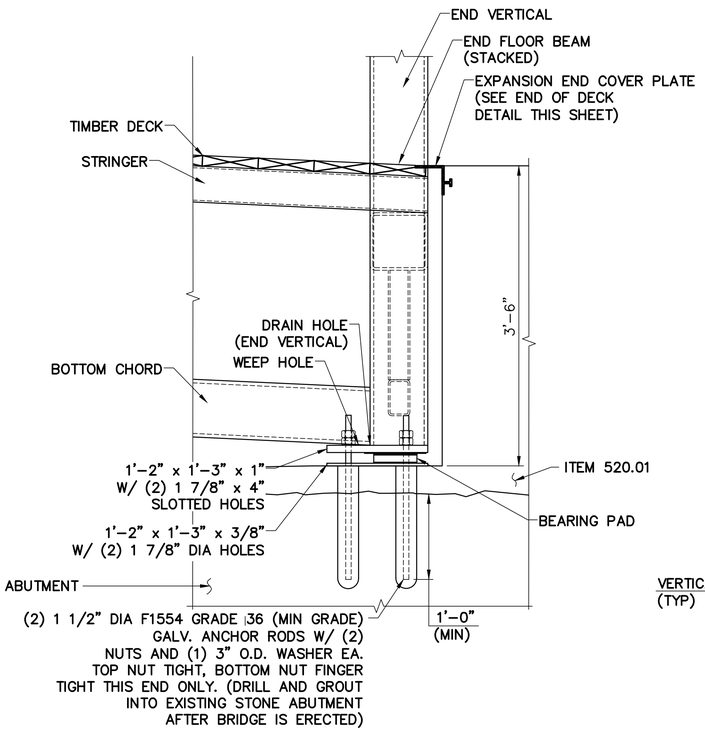

SECTION C–C
NOT TO SCALE

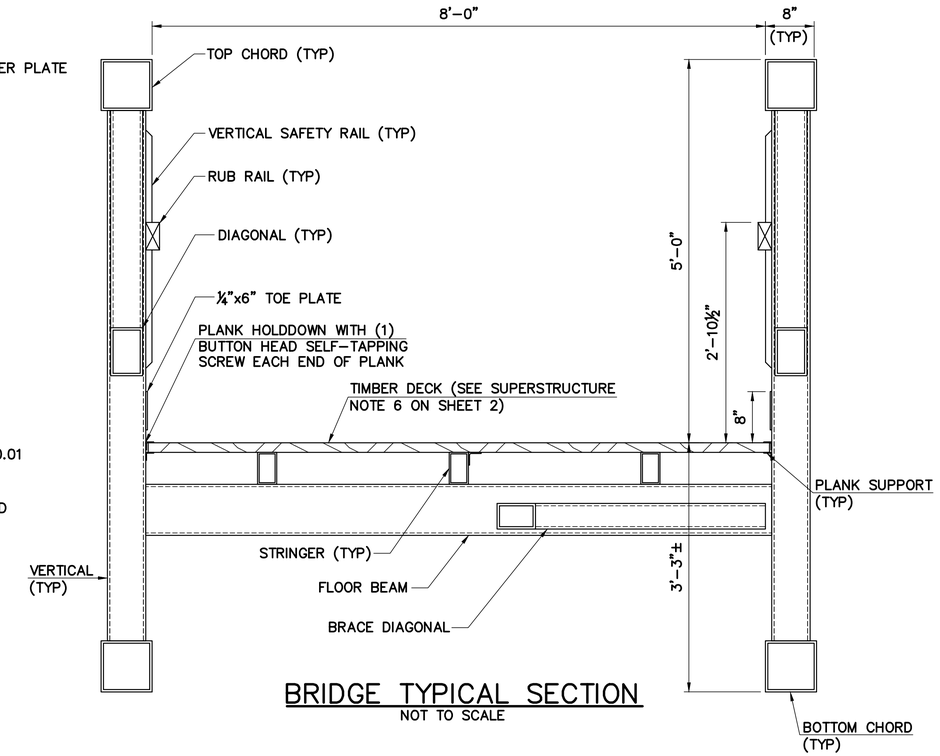

BRIDGE TYPICAL SECTION
NOT TO SCALE

SECTION NOTES

(1) THE END OF BRIDGE SECTIONS ARE SCHEMATIC ONLY. THE ACTUAL BEARING DETAILS INCLUDING ALL DIMENSIONS SHALL BE PROVIDED BY THE PEDESTRIAN BRIDGE FABRICATOR.

(2) ALL COSTS FOR DRILLING AND GROUTING ANCHOR BOLTS IS SUBSIDIARY TO ITEM 569.5.

DETAIL NOT USED 1

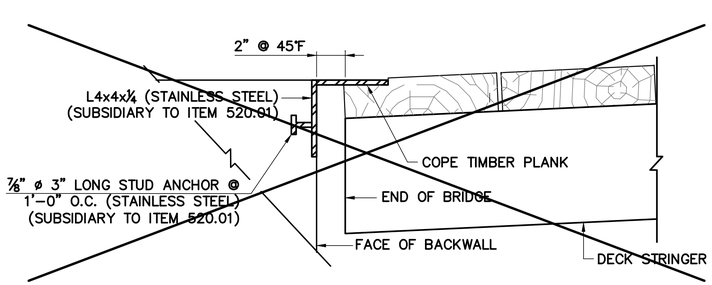

END OF DECK DETAIL AT FIXED END
NOTE: END FLOOR BEAM NOT SHOWN FOR CLARITY.
NOT TO SCALE

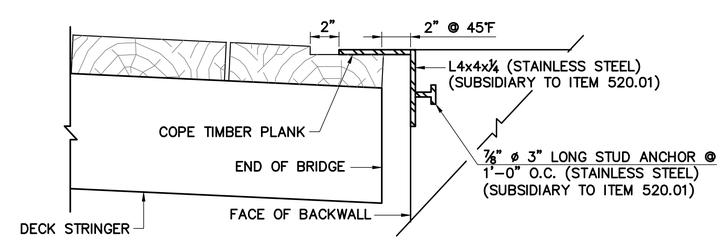

END OF DECK DETAIL AT EXPANSION END
NOTE: END FLOOR BEAM NOT SHOWN FOR CLARITY.
NOT TO SCALE

I HEREBY CERTIFY THAT TO THE BEST OF MY KNOWLEDGE, BASED UPON CONSTRUCTION RECORDS, THAT ALL WORK SHOWN IN THESE DRAWINGS HAS BEEN COMPLETED AS SHOWN.

HOYLE, TANNER & ASSOCIATES, INC.

SIGNED NOVEMBER 2015

NOTE: WORDING CONTAINED HEREON IS UNDERSTOOD TO BE PAST TENSE.

REV.	DESCRIPTION	DRW. BY	CHKD. BY	DATE
1	RECORD COPY REVISIONS	TAG	GPC	11-2015

This document is prepared as an instrument of service and shall remain the property of Hoyle, Tanner. It may not be used, reproduced, disseminated or transferred in any manner, including electronically, for any other purpose than this project, without the written permission of Hoyle, Tanner.

DECEMBER 2014
DESIGN BY: JCR
DRAWN BY: PBD / TAG
CHKD. BY: STJ
SCALE: AS SHOWN

Hoyle, Tanner & Associates, Inc.
150 Dow Street, Manchester, NH 03101-1227
Tel (603) 669-5555 · Fax (603) 669-4168
Webpage: www.hoyletanner.com

CITY OF MANCHESTER
MANCHESTER, NEW HAMPSHIRE

PISCATAQUOG RIVER TRAIL PHASE III–A

BRIDGE SECTION AND DETAILS

PROJECT NO.: 093143
FILE NAME:
LAYOUT NAME: AB093143DTL3

SHEET NO.
21
SHEET 21 OF 27

RETAINING WALL NOTES

(1) SEE SPECIAL PROVISION ITEM 592.1, MECHANICALLY STABILIZED EARTH RETAINING WALL, FOR ACCEPTABLE MANUFACTURED WALL SYSTEMS.

(2) CONTRACTOR SHALL SUPPLY SHOP DRAWINGS AND DESIGN CALCULATIONS, SEALED AND SIGNED BY A PROFESSIONAL ENGINEER LICENSED IN THE STATE OF NEW HAMPSHIRE FOR REVIEW AND APPROVAL PRIOR TO FABRICATION. SEE SPECIAL PROVISION FOR ITEM 592.1, MECHANICALLY STABILIZED EARTH RETAINING WALL, FOR FURTHER INFORMATION.

(3) THE CONTRACTOR SHALL FURNISH ALL LABOR, MATERIALS AND EQUIPMENT REQUIRED TO PERFORM ALL OPERATIONS IN CONNECTION WITH THE INSTALLATION OF MECHANICALLY STABILIZED EARTH RETAINING WALL IN ACCORDANCE WITH THE LINES AND GRADES SHOWN ON THE PLANS.

(4) MECHANICALLY STABILIZED EARTH CONCRETE WALL BLOCK UNITS SHALL BE FABRICATED USING THE FOLLOWING MATERIALS: CONCRETE WITH MINIMUM 28 DAY COMPRESSIVE STRENGTH OF 3,000 PSI, REINFORCING STEEL WITH A MINIMUM YIELD STRENGTH OF 60,000 PSI.

(5) ITEM 592.1, MECHANICALLY STABILIZED EARTH RETAINING WALL SHALL INCLUDE ALL EXCAVATION, BACKFILL, PRECAST CONCRETE BLOCK UNITS, GEOTEXTILE FABRIC, STRUCTURAL FILL, REINFORCING GRIDS OR STRIPS (IF REQUIRED), ATTACHMENT DEVICES, FASTENERS, JOINT MATERIALS AND ALL NECESSARY INCIDENTALS, COMPLETE AND IN PLACE.

(6) THE WALL PANEL LAYOUT ILLUSTRATED ON THIS SHEET AS WELL AS SHEETS 18 AND 19 ASSUMES NOMINAL DIMENSIONS OF 46⅛"x40½"x18" AND 22 13/16"x28"x18" FOR THE PRECAST CONCRETE BLOCK UNITS. THE DIMENSIONS OF THE WALL SYSTEM SELECTED MAY VARY FROM THE ASSUMED DIMENSIONS. THE CONTRACTOR IS RESPONSIBLE FOR MATCHING, AS CLOSE AS PRACTICABLE, THE ELEVATIONS AND DIMENSIONS ILLUSTRATED WITH THE WALL SYSTEM SELECTED.

(7) THE BOTTOM ROWS OF BLOCKS SHALL BE IN FULL CONTACT WITH FOUNDATION MATERIAL. INSTALL NEXT COURSE OF UNITS SUCH THAT THE VERTICAL SEAMS ARE OFFSET. THE VERTICAL GAPS BETWEEN WALL UNITS SHALL BE FILLED WITH CRUSHED STONE PRIOR TO STARTING THE NEXT COURSE.

(8) TWO (2) SETS OF APPROVED SHOP DRAWINGS SHALL BE SUBMITTED ON PERMANENT ARCHIVAL QUALITY 22" x 34" DOUBLE-MATTE MYLAR.

(9) EXPOSED FACES OF THE MECHANICALLY STABILIZED EARTH RETAINING WALL SHALL HAVE A COBBLESTONE ARCHITECTURAL TREATMENT (OR APPROVED EQUAL).

(10) ITEM 534.3, WATER REPELLENT (SILANE/SILOXANE), SHALL BE APPLIED AT ALL EXPOSED SURFACES OF THE MECHANICALLY STABILIZED EARTH RETAINING WALL AND 1'-0" BEYOND FILL ON BACK FACE OR TO BOTTOM OF WALL AT FRONT FACE.

(11) THE CONTRACTOR SHALL BE RESPONSIBLE FOR THE POST LAYOUT OF ITEM 606.002 WITHIN THE LIMITS OF ITEM 592.1 INCLUDING ALL NECESSARY CUTTING OF GEOGRID. ALL COSTS FOR POST LAYOUT SHALL BE SUBSIDIARY TO ITEM 592.1

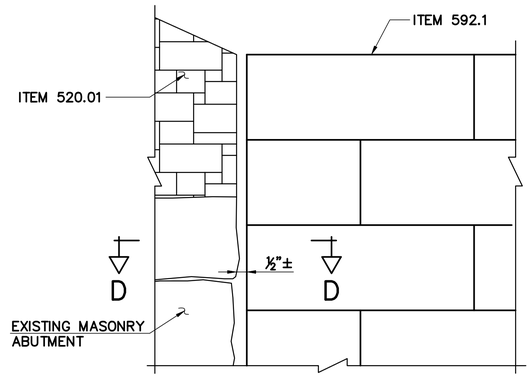

END OF RETAINING WALL DETAIL

SCALE: ¾" = 1'-0"

0 1' 2' 4'

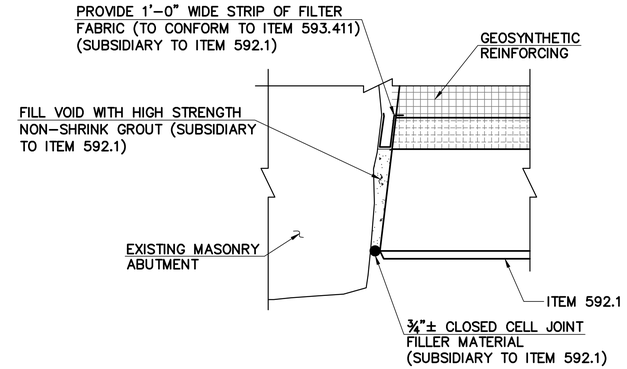

NOTE
BATTER NOT SHOWN FOR CLARITY.

SECTION D-D

SCALE: ¾" = 1'-0"

0 1' 2' 4'

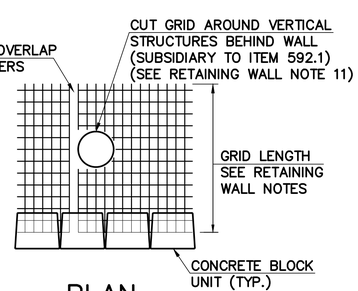

PLAN
SOIL REINFORCEMENT AT STRUCTURES BEHIND WALL

NOT TO SCALE

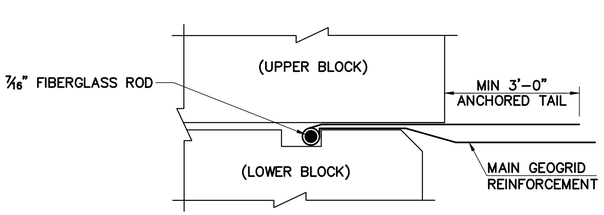

GEOGRID CONNECTOR DETAIL

NOT TO SCALE

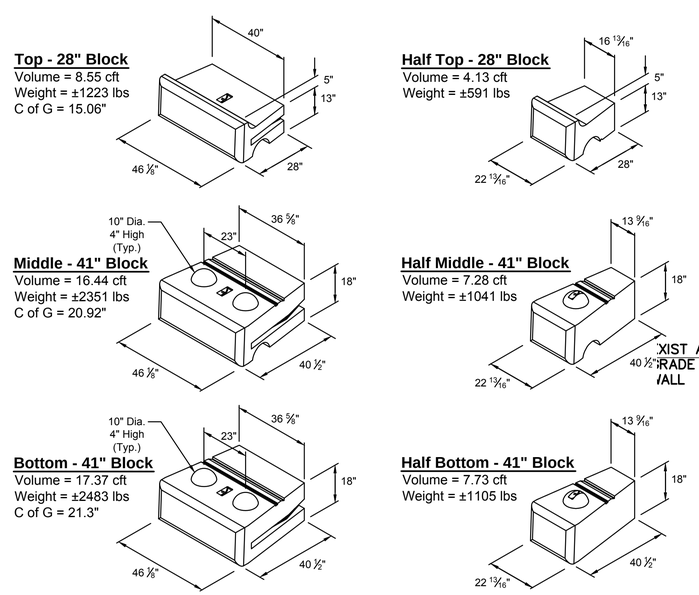

TYPICAL BLOCK DIMENSIONS

NOT TO SCALE

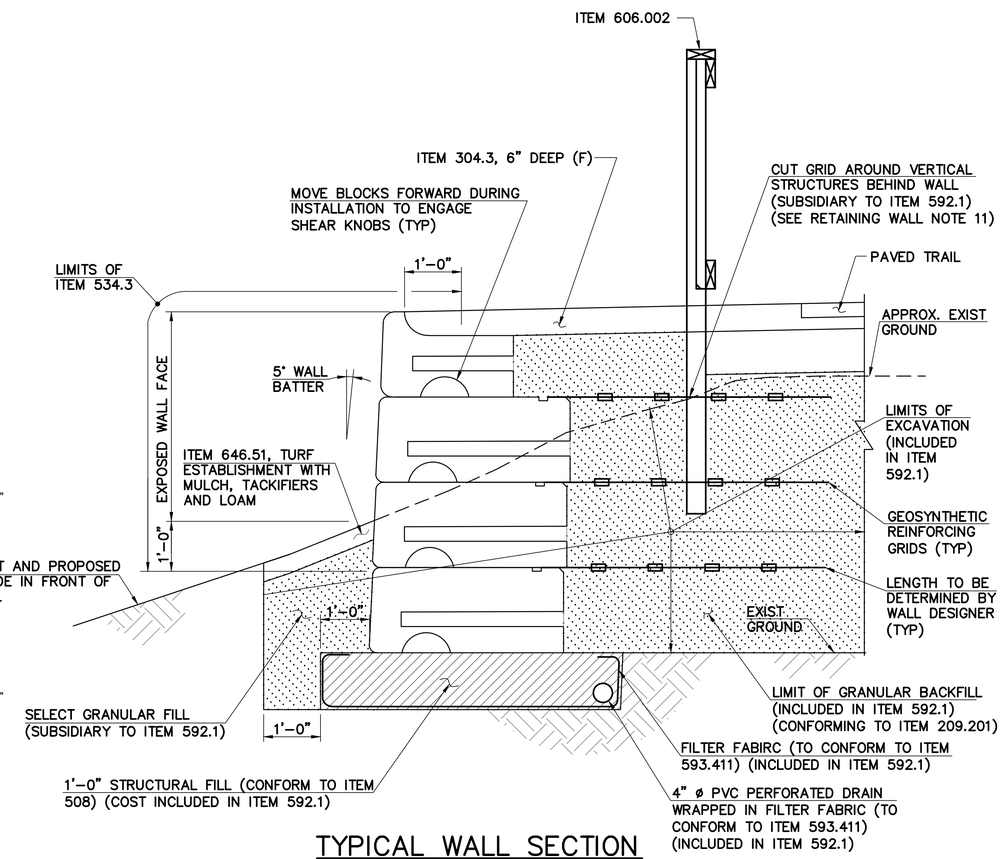

TYPICAL WALL SECTION

NOT TO SCALE

I HEREBY CERTIFY THAT TO THE BEST OF MY KNOWLEDGE, BASED UPON CONSTRUCTION RECORDS, THAT ALL WORK SHOWN IN THESE DRAWINGS HAS BEEN COMPLETED AS SHOWN.

HOYLE, TANNER & ASSOCIATES, INC.

SIGNED NOVEMBER 2015

NOTE: WORDING CONTAINED HEREON IS UNDERSTOOD TO BE PAST TENSE.

REV.	DESCRIPTION	DRW BY	CHKD BY	DATE

This document is prepared as an instrument of service and shall remain the property of Hoyle, Tanner. It may not be used, reproduced, disseminated or transferred in any manner, including electronically, for any other purpose than this project, without the written permission of Hoyle, Tanner.

DECEMBER 2014

DESIGN BY: JCR

DRAWN BY: PBD / TAG

CHRD. BY: STJ

SCALE: AS SHOWN

Hoyle, Tanner & Associates, Inc.
150 Dow Street, Manchester, NH 03101-1227
Tel (603) 669-5555 · Fax (603) 669-4168
Webpage: www.hoyletanner.com

CITY OF MANCHESTER
MANCHESTER, NEW HAMPSHIRE

PISCATAQUOG RIVER TRAIL PHASE III-A

RETAINING WALL DETAILS

PROJECT NO.: 093143

FILE NAME:

LAYOUT NAME: AB093143RWD1

SHEET NO.

22

SHEET 22 OF 27

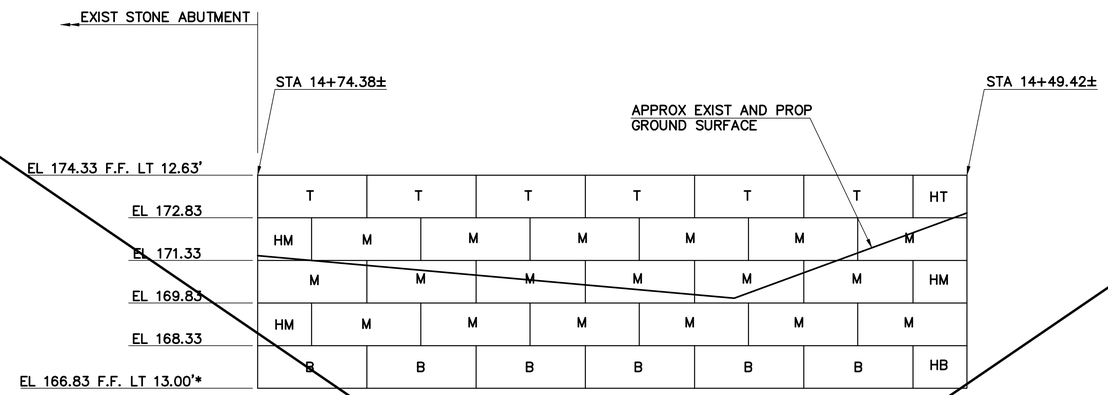

NORTHWEST WALL ELEVATION

SCALE ⅜" = 1'-0"

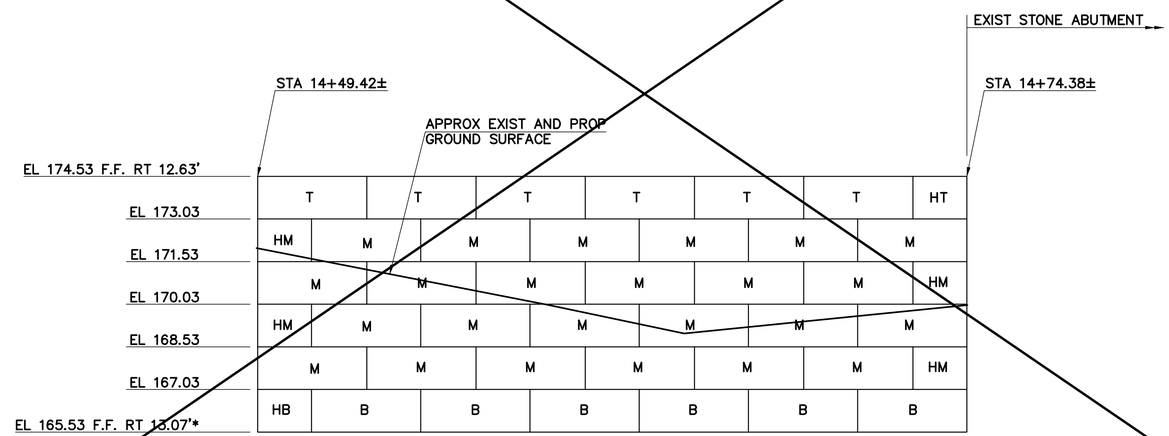

SOUTHWEST WALL ELEVATION

SCALE ⅜" = 1'-0"

⚠1 *SEE MICHIE SHOP DRAWINGS FOR MSE WALL LAYOUT*

LEGEND

T = TOP BLOCK
HT = HALF TOP BLOCK
M = MIDDLE BLOCK
HM = HALF MIDDLE BLOCK
B = BOTTOM BLOCK
HB = HALF BOTTOM BLOCK
F.F. = FRONT FACE
* = BASED ON 5° BATTER

0 1' 2' 4' 8'
SCALE: ⅜" = 1'-0"

I HEREBY CERTIFY THAT TO THE BEST OF MY KNOWLEDGE, BASED UPON CONSTRUCTION RECORDS, THAT ALL WORK SHOWN IN THESE DRAWINGS HAS BEEN COMPLETED AS SHOWN.

HOYLE, TANNER & ASSOCIATES, INC.

SIGNED _____ NOVEMBER 2015

NOTE: WORDING CONTAINED HEREON IS UNDERSTOOD TO BE PAST TENSE.

REV.	DESCRIPTION	DRW BY	CHKD BY	DATE
⚠1	RECORD COPY REVISIONS	TAG	PC	11-2015

This document is prepared as an instrument of service and shall remain the property of Hoyle, Tanner. It may not be used, reproduced, disseminated or transferred in any manner, including electronically, for any other purpose than this project, without the written permission of Hoyle, Tanner.

DECEMBER 2014

DESIGN BY: JCR

DRAWN BY: PBD / TAG

CHKD. BY: STJ

SCALE: AS SHOWN

Hoyle, Tanner & Associates, Inc.
150 Dow Street, Manchester, NH 03101-1227
Tel (603) 669-5555 · Fax (603) 669-4168
Webpage: www.hoyletanner.com

CITY OF MANCHESTER
MANCHESTER, NEW HAMPSHIRE

PISCATAQUOG RIVER TRAIL PHASE III-A

RETAINING WALL ELEVATIONS (1 OF 2)

PROJECT NO.: 093143

FILE NAME:

LAYOUT NAME: AB093143RWD2

SHEET NO.

23

SHEET 23 OF 27

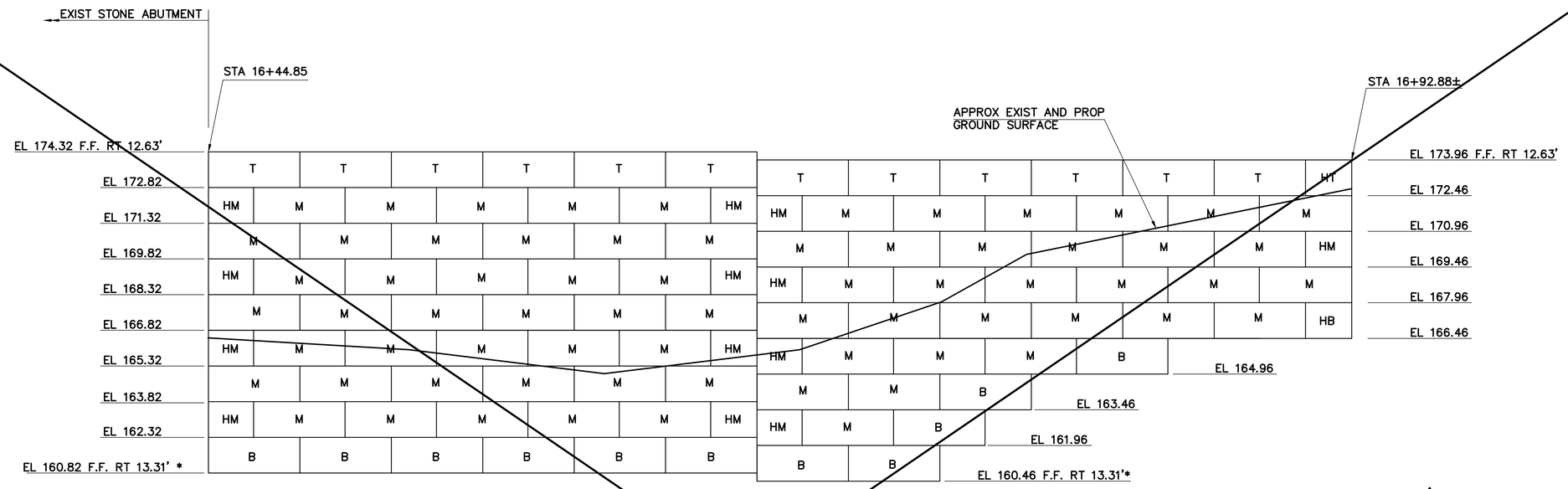

SEE MICHIE SHOP DRAWINGS FOR MSE WALL LAYOUT

SOUTHEAST WALL ELEVATION

SCALE ⅜" = 1'-0"

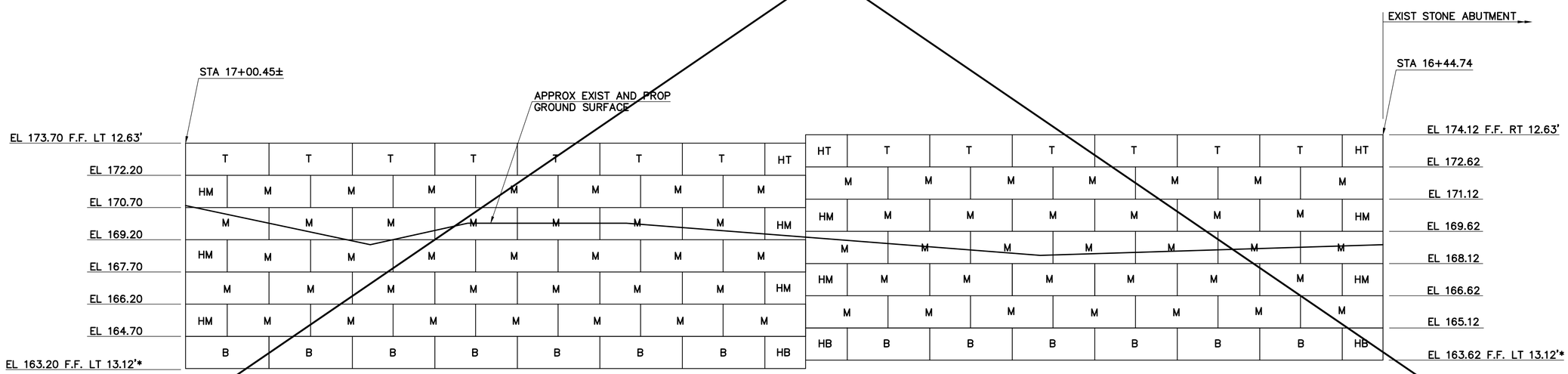

NORTHEAST WALL ELEVATION

SCALE ⅜" = 1'-0"

LEGEND

T = TOP BLOCK
HT = HALF TOP BLOCK
M = MIDDLE BLOCK
HM = HALF MIDDLE BLOCK
B = BOTTOM BLOCK
HB = HALF BOTTOM BLOCK
F.F. = FRONT FACE
* = BASED ON 5° BATTER

0 1' 2' 4' 8'
SCALE: ⅜" = 1'-0"

I HEREBY CERTIFY THAT TO THE BEST OF MY KNOWLEDGE, BASED UPON CONSTRUCTION RECORDS, THAT ALL WORK SHOWN IN THESE DRAWINGS HAS BEEN COMPLETED AS SHOWN.

HOYLE, TANNER & ASSOCIATES, INC.

SIGNED _____ NOVEMBER 2015

NOTE: WORDING CONTAINED HEREON IS UNDERSTOOD TO BE PAST TENSE.

REV.	DESCRIPTION	DRW BY	CHKD BY	DATE
1	RECORD COPY REVISIONS	TAG	PCI	11-2015

This document is prepared as an instrument of service and shall remain the property of Hoyle, Tanner. It may not be used, reproduced, disseminated or transferred in any manner, including electronically, for any other purpose than this project, without the written permission of Hoyle, Tanner.

DECEMBER 2014

DESIGN BY: JCR
DRAWN BY: PBD / TAG
CHKD. BY: STJ
SCALE: AS SHOWN

Hoyle, Tanner & Associates, Inc.
150 Dow Street, Manchester, NH 03101-1227
Tel (603) 669-5555 · Fax (603) 669-4168
Webpage: www.hoyletanner.com

CITY OF MANCHESTER
MANCHESTER, NEW HAMPSHIRE

PISCATAQUOG RIVER TRAIL PHASE III-A

RETAINING WALL ELEVATIONS
(2 OF 2)

PROJECT NO.: 093143
FILE NAME:
LAYOUT NAME: AB093143RWD3

SHEET NO.
24
SHEET 24 OF 27

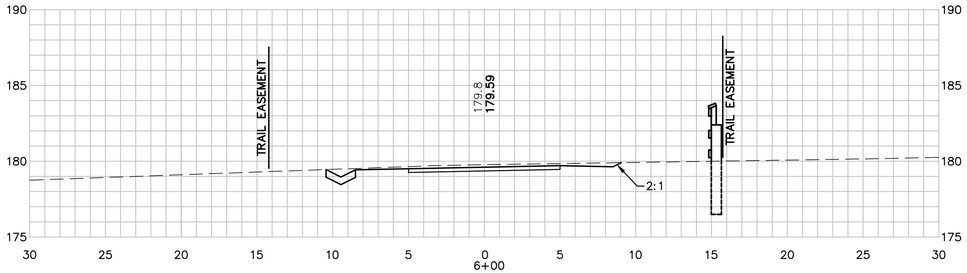

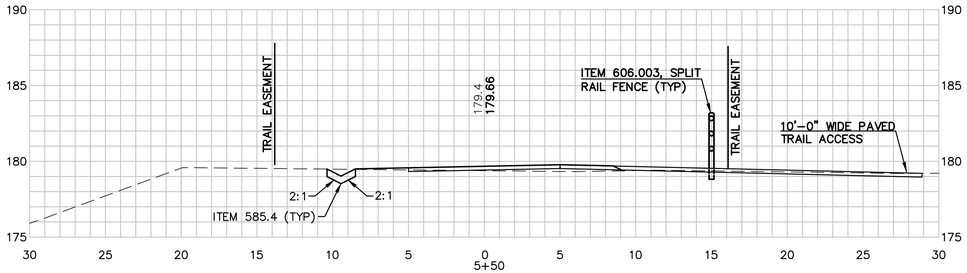

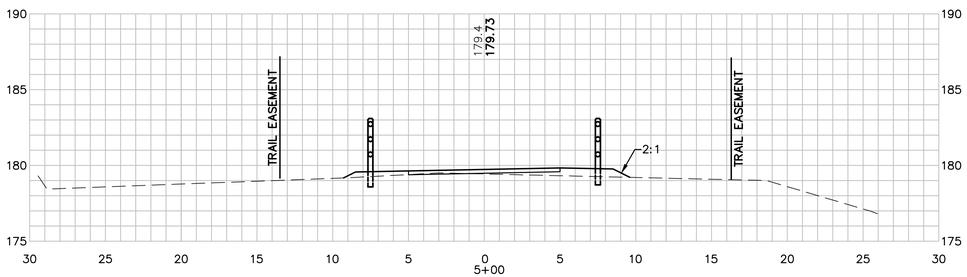

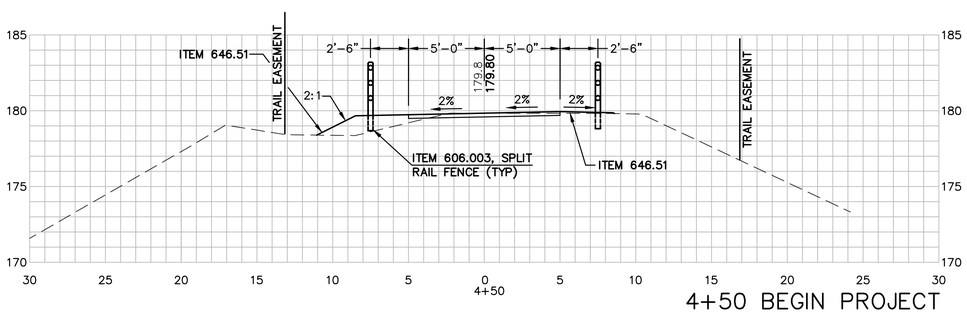

4+50 BEGIN PROJECT

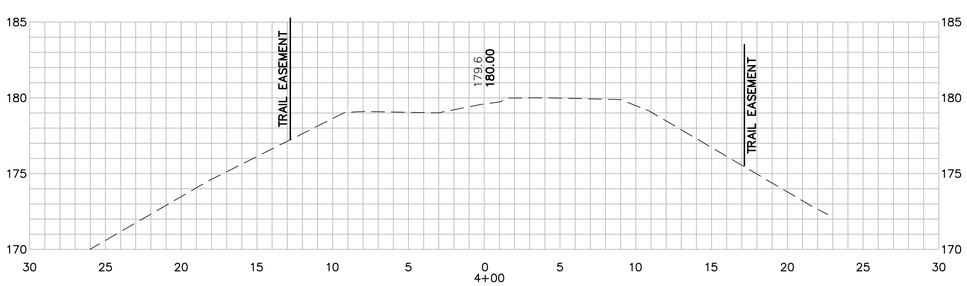

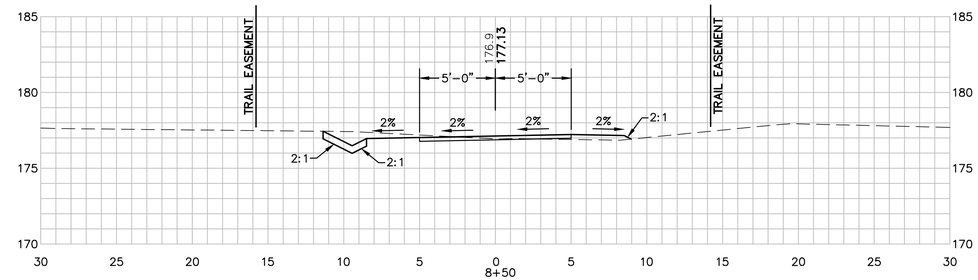

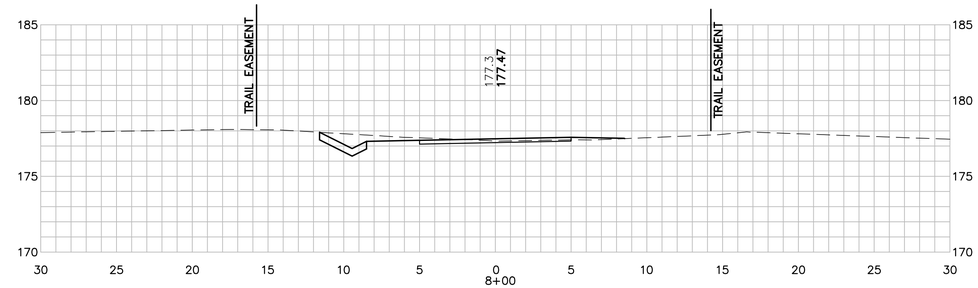

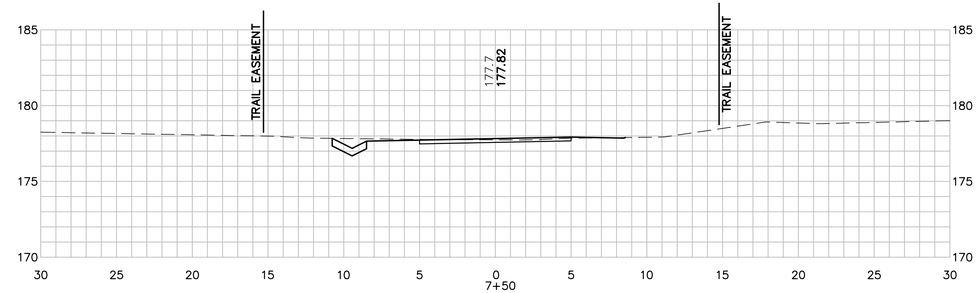

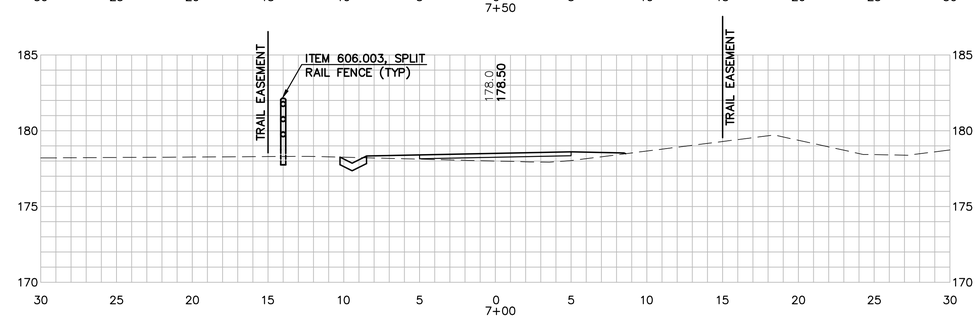

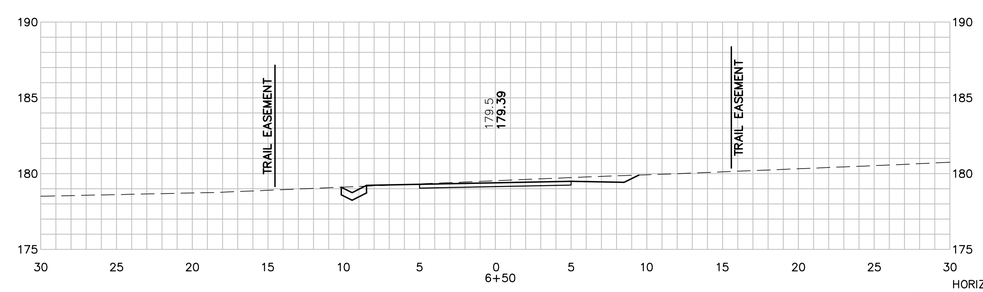

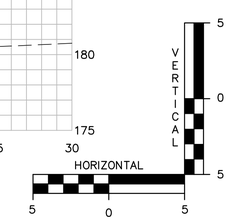

I HEREBY CERTIFY THAT TO THE BEST OF MY KNOWLEDGE, BASED UPON CONSTRUCTION RECORDS, THAT ALL WORK SHOWN IN THESE DRAWINGS HAS BEEN COMPLETED AS SHOWN.

HOYLE, TANNER & ASSOCIATES, INC.

SIGNED _____ NOVEMBER 2015

NOTE: WORDING CONTAINED HEREON IS UNDERSTOOD TO BE PAST TENSE.

REV.	DESCRIPTION	DRW BY	CHKD BY	DATE

This document is prepared as an instrument of service and shall remain the property of Hoyle, Tanner. It may not be used, reproduced, disseminated or transferred in any manner, including electronically, for any other purpose than this project, without the written permission of Hoyle, Tanner.

DECEMBER 2014

DESIGN BY: JCR

DRAWN BY: PBD / TAG

CHKD. BY: STJ

SCALE: AS SHOWN

Hoyle, Tanner & Associates, Inc.
150 Dow Street, Manchester, NH 03101-1227
Tel (603) 669-5555 · Fax (603) 669-4168
Webpage: www.hoyletanner.com

CITY OF MANCHESTER
MANCHESTER, NEW HAMPSHIRE

PISCATAQUOG RIVER TRAIL PHASE III-A

CROSS SECTIONS (1 OF 3)

PROJECT NO.: 093143

FILE NAME:

LAYOUT NAME: AB093143XS

SHEET NO.

25

SHEET 25 OF 27

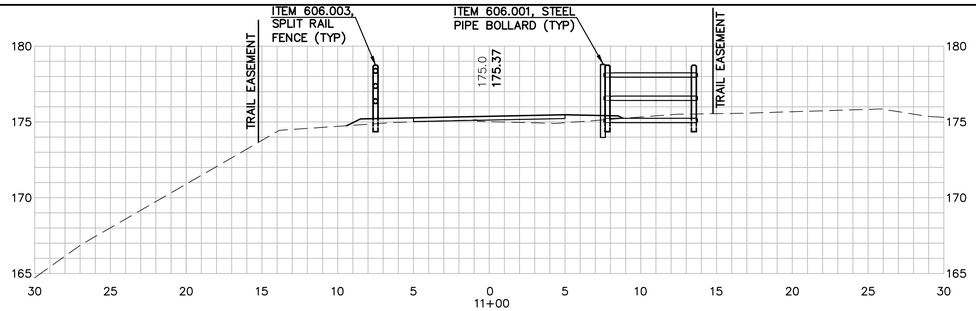

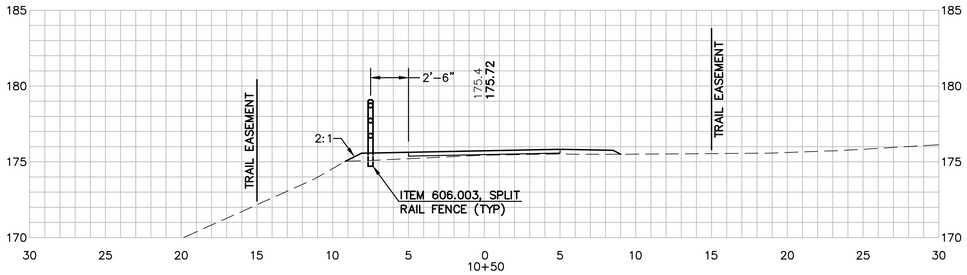

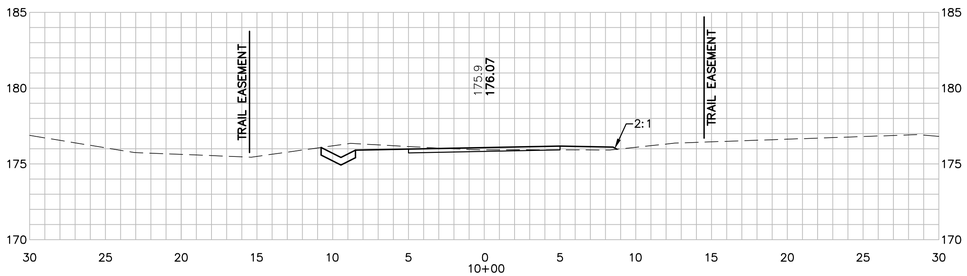

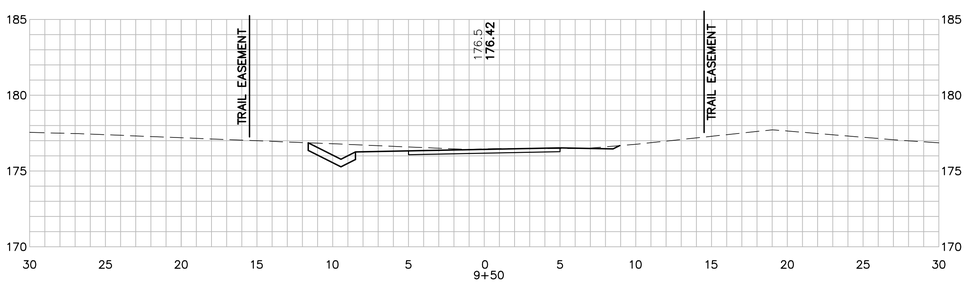

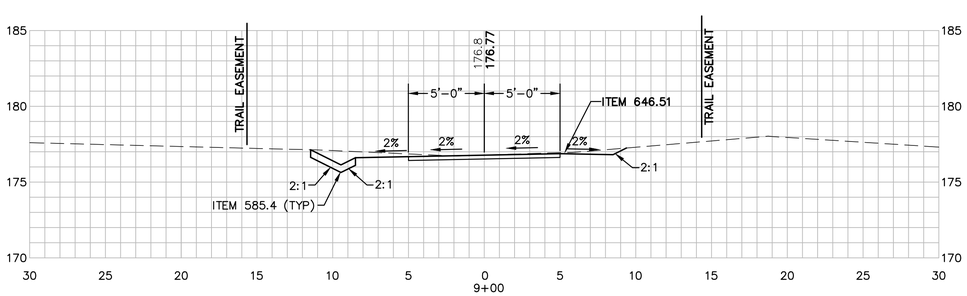

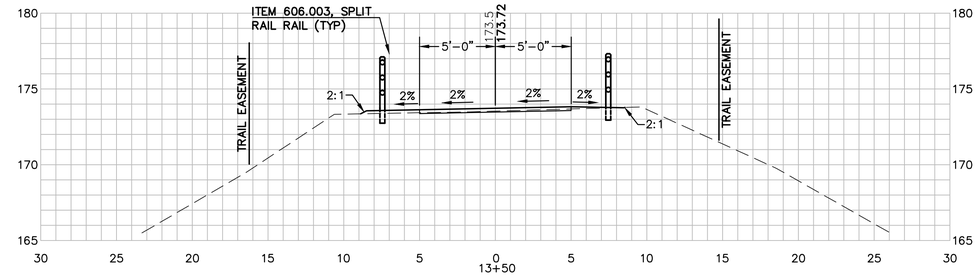

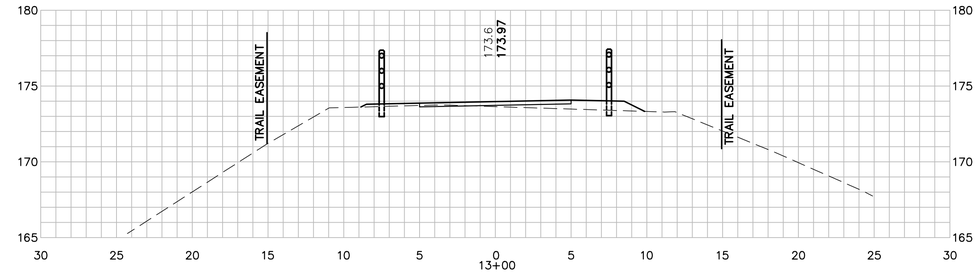

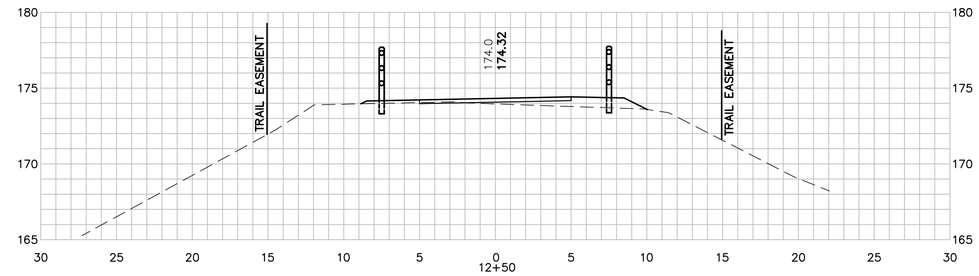

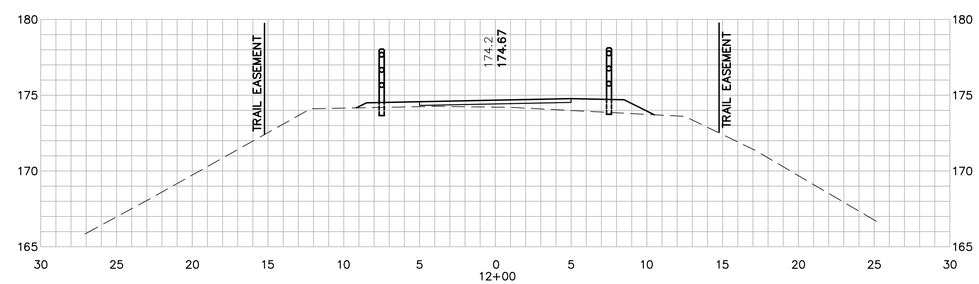

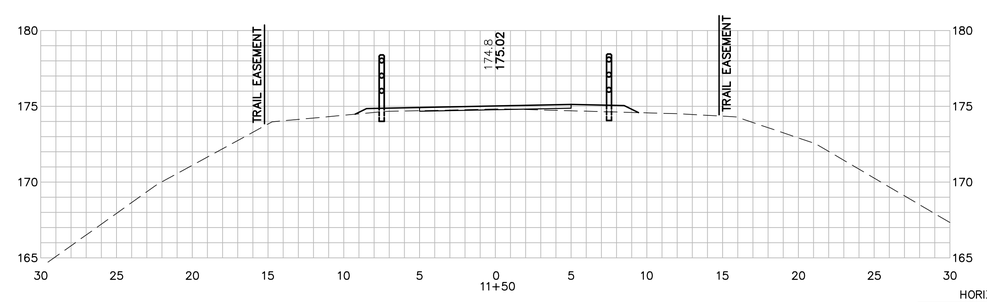

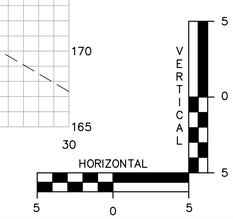

I HEREBY CERTIFY THAT TO THE BEST OF MY KNOWLEDGE, BASED UPON CONSTRUCTION RECORDS, THAT ALL WORK SHOWN IN THESE DRAWINGS HAS BEEN COMPLETED AS SHOWN.

HOYLE, TANNER & ASSOCIATES, INC.

SIGNED _____ NOVEMBER 2015

NOTE: WORDING CONTAINED HEREON IS UNDERSTOOD TO BE PAST TENSE.

REV.	DESCRIPTION	DRW BY	CHKD BY	DATE

This document is prepared as an instrument of service and shall remain the property of Hoyle, Tanner. It may not be used, reproduced, disseminated or transferred in any manner, including electronically, for any other purpose than this project, without the written permission of Hoyle, Tanner.

DECEMBER 2014

DESIGN BY: JCR

DRAWN BY: PBD / TAG

CHKD. BY: STJ

SCALE: AS SHOWN

Hoyle, Tanner & Associates, Inc.
150 Dow Street, Manchester, NH 03101-1227
Tel (603) 669-5555 · Fax (603) 669-4168
Webpage: www.hoyletanner.com

CITY OF MANCHESTER
MANCHESTER, NEW HAMPSHIRE

PISCATAQUOG RIVER TRAIL PHASE III–A

CROSS SECTIONS (2 OF 3)

PROJECT NO.: 093143

FILE NAME:

LAYOUT NAME: AB093143XS

SHEET NO.

26

SHEET 26 OF 27

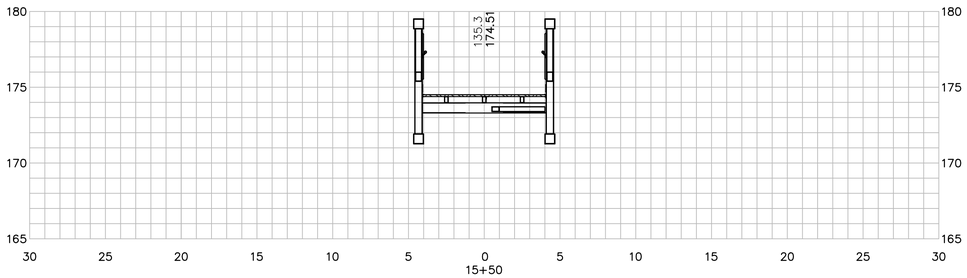

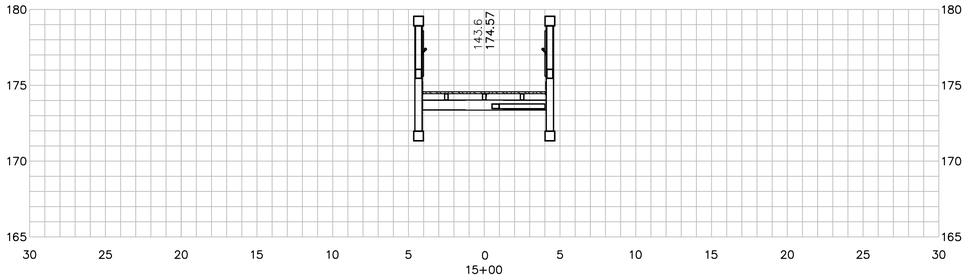

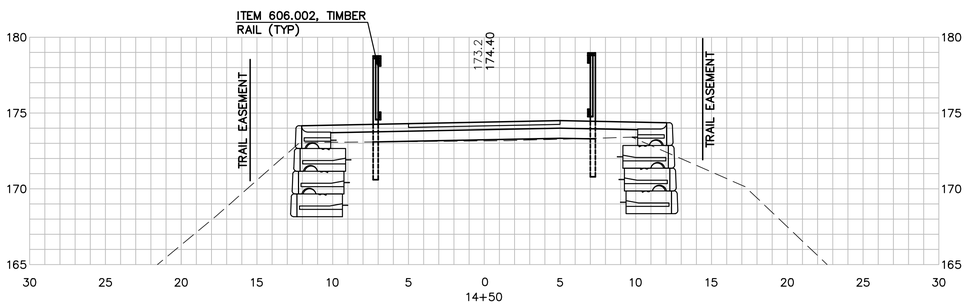

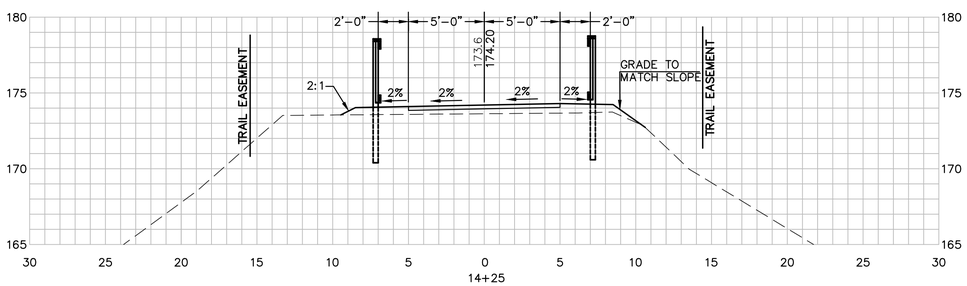

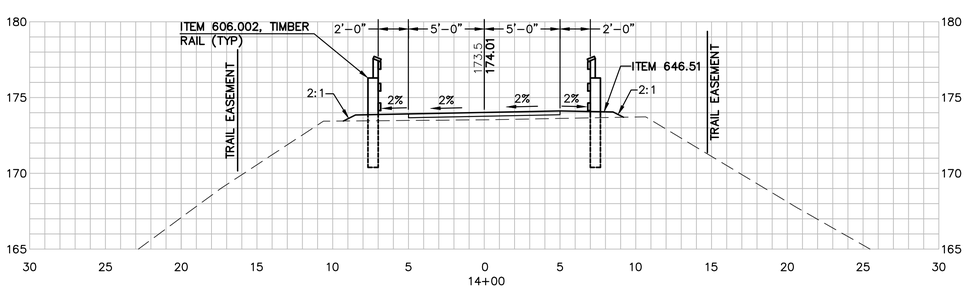

END PROJECT

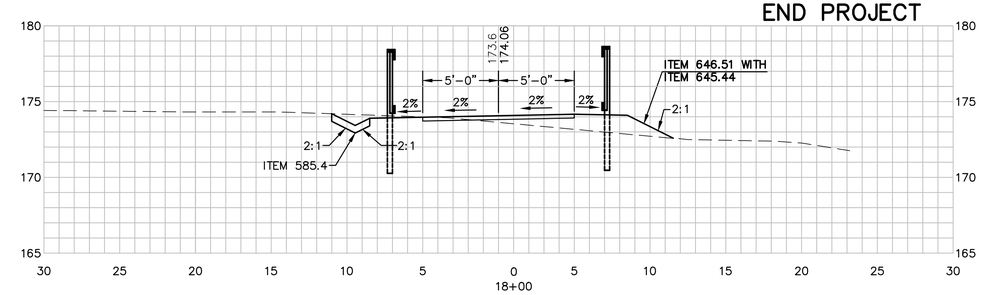

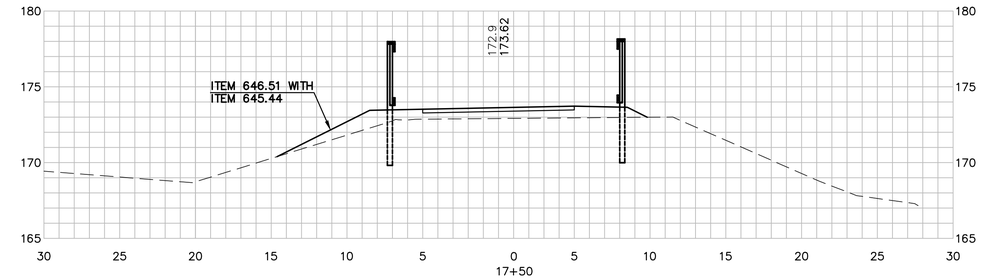

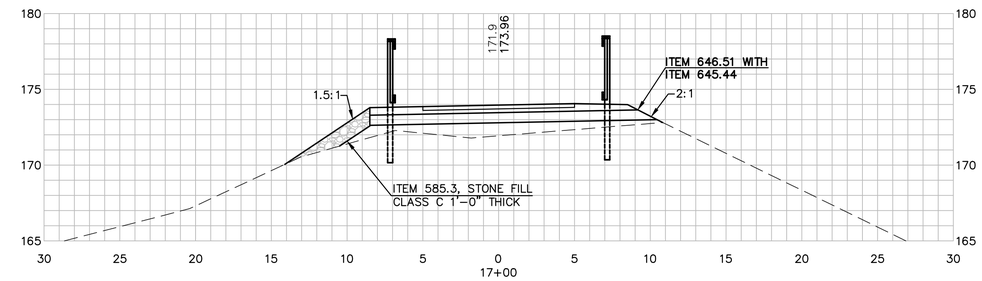

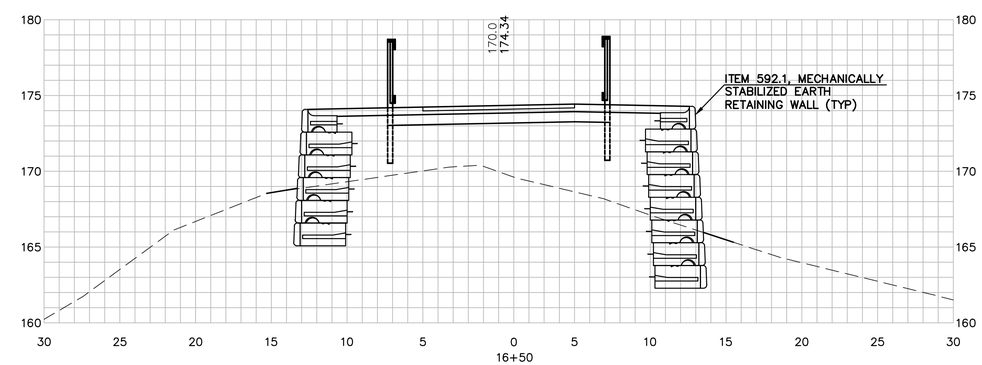

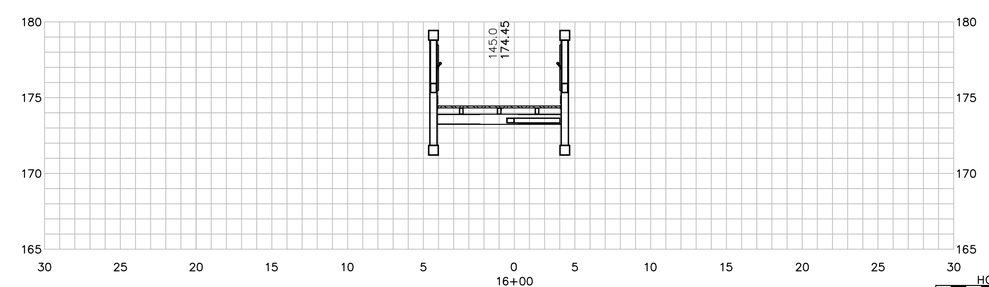

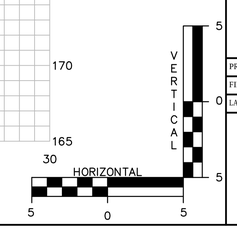

I HEREBY CERTIFY THAT TO THE BEST OF MY KNOWLEDGE, BASED UPON CONSTRUCTION RECORDS, THAT ALL WORK SHOWN IN THESE DRAWINGS HAS BEEN COMPLETED AS SHOWN.

HOYLE, TANNER & ASSOCIATES, INC.

SIGNED _____ NOVEMBER 2015

NOTE: WORDING CONTAINED HEREON IS UNDERSTOOD TO BE PAST TENSE.

REV.	DESCRIPTION	DRW BY	CHKD BY	DATE

This document is prepared as an instrument of service and shall remain the property of Hoyle, Tanner. It may not be used, reproduced, disseminated or transferred in any manner, including electronically, for any other purpose than this project, without the written permission of Hoyle, Tanner.

DECEMBER 2014

DESIGN BY: JCR

DRAWN BY: PBD / TAG

CHKD. BY: STJ

SCALE: AS SHOWN

Hoyle, Tanner & Associates, Inc.
150 Dow Street, Manchester, NH 03101-1227
Tel (603) 669-5555 · Fax (603) 669-4168
Webpage: www.hoyletanner.com

CITY OF MANCHESTER
MANCHESTER, NEW HAMPSHIRE

PISCATAQUOG RIVER TRAIL PHASE III–A

CROSS SECTIONS (3 OF 3)

PROJECT NO.: 093143

FILE NAME:

LAYOUT NAME: AB093143XS

SHEET NO.

27

SHEET 27 OF 27

7/29/2015 3:10 PM

PISCATAQUOG RIVER TRAIL PED. BRIDGE

MANCHESTER, NH

T BUCK CONSTRUCTION

DRAWING INDEX

SHEET NO.	DESCRIPTION	REV AB
T001	TITLE PAGE	7/29/2015
T002	GENERAL NOTES	7/29/2015
T003	BEARING REACTION & ANCHOR BOLT LAYOUT	7/29/2015
S101	ELEVATION & PLAN VIEW	7/29/2015
S102	CROSS SECTION	7/29/2015
S103	BEARING ELEVATIONS	7/29/2015
S104	BEARING DETAILS	7/29/2015
S105	SPLICE DETAILS	7/29/2015

REV	STATUS	BY	DATE
AB	AS BUILT	MMA	7/29/2015

PROPRIETARY AND CONFIDENTIAL

THIS DRAWING IS THE SOLE PROPERTY OF BIG R MANUFACTURING, LLC. AND CONTAINS PROPRIETARY INFORMATION FOR USE WITH THIS PROJECT ONLY. ANY REPRODUCTION IN PART OR AS A WHOLE WITHOUT WRITTEN PERMISSION IS STRICTLY PROHIBITED.

BIG R BRIDGE

P.O. Box 1290 · Greeley, Colorado 80632-1290
(970) 356-9600 · Fax:(970) 356-9621 · www.bigrbridge.com

160'-0" x 8'-0"

PISCATAQUOG RIVER TRAIL PED. BRIDGE

MANCHESTER, NH

T BUCK CONSTRUCTION

STATE OF NEW HAMPSHIRE DAVID G. ROGERS 10703 LICENSED PROFESSIONAL ENGINEER 8/18/15

BR14-02922

DESIGN BY ENL

DRAWN BY MMA

CHECKED BY ENL

SHEET NO. T001 OF T003

K:\2014\BR\BR14-02922\BR14-02922-P.dwg

7/29/2015 3:10 PM

GENERAL NOTES

1) BIG R BRIDGE IS AISC QUALITY CERTIFIED BRIDGE FABRICATION – INTERMEDIATE (MAJOR) WITH A FRACTURE CRITICAL AND SOPHISTICATED PAINT ENDORSEMENT, AND CWB CERTIFIED TO CSA STANDARD W47.1 DIVISION 2.

2) DESIGN IS IN ACCORDANCE WITH THE "LRFD GUIDE SPECIFICATION FOR DESIGN OF PEDESTRIAN BRIDGES" BY AASHTO, DECEMBER 2009.

3) MATERIALS (UNLESS NOTED OTHERWISE):

a) HSS SECTIONS:	ASTM A847 WEATHERING STEEL	Fy = 50 ksi MIN.
b) STEEL SHAPES:	ASTM A588 WEATHERING STEEL	Fy = 50 ksi
c) STEEL PLATES:	ASTM A588 WEATHERING STEEL	Fy = 50 ksi
d) ANCHOR BOLTS:	ASTM F1554 GRADE 55	Fy = 55 ksi (GALV)
e) STRUCTURAL BOLTS:	ASTM A325 TYPE 3	
f) RUB RAIL:	IPE	
g) WOOD DECK:	TREATED SOUTHERN YELLOW PINE No. 1 OR BETTER	

4) DESIGN LOADINGS:
   a) BRIDGE DEAD LOAD
   b) UNIFORM PEDESTRIAN LIVE LOAD OF 90 PSF.
   c) VEHICLE LIVE LOAD OF H5 TRUCK.
   d) WIND LOAD FROM 90 MPH WIND AT A MAX HEIGHT OF 32.8' ABOVE GRADE.

5) BRIDGE TO BE BUILT TO THE REQUIREMENTS OF AWS D1.1

6) ALL SHOP WELDING SHALL USE THE GAS METAL ARC WELDING OR FLUX CORED ARC WELDING PROCESS.

7) FINISH:
   ALL EXPOSED SURFACES OF STRUCTURAL STEEL TO BE BRUSH-OFF BLAST CLEANED IN ACCORDANCE WITH SSPC-SP7. EXPOSED SURFACES OF STEEL SHALL BE DEFINED AS THOSE SURFACES SEEN FROM THE DECK OR FROM THE OUTSIDE AND BOTTOM OF THE STRUCTURE.

8) ALL BOLTS AND NUTS SHALL BE FURNISHED IN THE AMOUNT OF 5% IN EXCESS OF THE NUMBER REQUIRED FOR EACH SIZE AND LENGTH.

9) IF BOLTS DO NOT SMOOTHLY ENGAGE UP TO SNUG-TIGHT, THERE MAY BE AN OBSTRUCTION WITHIN THE THREADS. THE BOLT SHOULD BE REMOVED, THE THREADS ON THE BOLT AND NUT CLEANED AND RETAPPED IF NECESSARY TO ALLOW SMOOTH INSTALLATION OF THE BOLT. (IF APPLICABLE)

10) MAINTENANCE NOTE: DO NOT APPLY DE-ICING OR DUST PROHIBITIVE CHEMICALS OR SALTS TO ANY PART OF THE BRIDGE STRUCTURE.

11) SHOP SPLICES:
   a) ALL TOP AND BOTTOM CHORD SHOP SPLICES TO BE COMPLETE PENETRATION TYPE WELDS.
   b) ALL SAFETY RAIL SHOP SPLICES TO BE SEAL WELDS LOCATED AT CENTERLINE OF VERTICAL.
   c) ALL STRINGER SHOP SPLICES TO BE SEAL WELDS LOCATED OVER CENTERLINE OF FLOOR BEAM.

12) WOOD SHALL BE ACQ TREATED OR EQUAL: TREATED TO 0.4 PCF OR REFUSAL.

13) CERTIFICATION OF MATERIALS:
   MILL TEST CERTIFICATES SHALL BE FURNISHED FOR ALL STRUCTURAL STEEL AND BOLTS. CERTIFIED MILL TEST REPORTS FOR ALL TRUSS MEMBERS AND FLOOR BEAMS SHALL INCLUDE, IN ADDITION TO OTHER TEST, RESULTS OF CHARPY V-NOTCH IMPACT TESTS (15 FT-LB @ 40° FAHRENHEIT, TESTED AT H-FREQUENCY).

14) ALL MATERIAL AND HARDWARE TO BE MANUFACTURED IN AMERICA.

15) STRUCTURAL BOLTING
   a) ALL BOLTS SHALL HAVE ROTATIONAL CAPACITY TESTS PERFORMED TO SECTION 550.2.4.4.4 OF NHDOT STANDARD SPECIFICATIONS FOR ROAD AND BRIDGE CONSTRUCTION 2010.
   b) TWO ADDITIONAL SAMPLES OF BOLTS SHALL BE SUPPLIED WITH BRIDGE FOR NHDOT FIELD SAMPLING. IF MORE SAMPLES ARE REQUIRED BIG R BRIDGE IS TO BE NOTIFIED PRIOR TO FABRICATION.

DATA PLATE DETAIL

REV	STATUS	BY	DATE
AB	AS BUILT	MMA	7/29/2015

PROPRIETARY AND CONFIDENTIAL

THIS DRAWING IS THE SOLE PROPERTY OF BIG R MANUFACTURING, LLC. AND CONTAINS PROPRIETARY INFORMATION FOR USE WITH THIS PROJECT ONLY. ANY REPRODUCTION IN PART OR AS A WHOLE WITHOUT WRITTEN PERMISSION IS STRICTLY PROHIBITED.

BIG R BRIDGE

P.O. Box 1290 • Greeley, Colorado 80632-1290
(970) 356-9600 • Fax:(970) 356-9621 • www.bigrbridge.com

160'-0" x 8'-0"

PISCATAQUOG RIVER TRAIL PED. BRIDGE

MANCHESTER, NH

T BUCK CONSTRUCTION

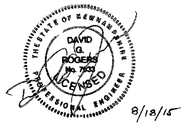

BR14-02922

DESIGN BY ENL

DRAWN BY MMA

CHECKED BY ENL

SHEET NO.

T002 OF T003

K:\2014\BR\BR14-02922\BR14-02922-P.dwg

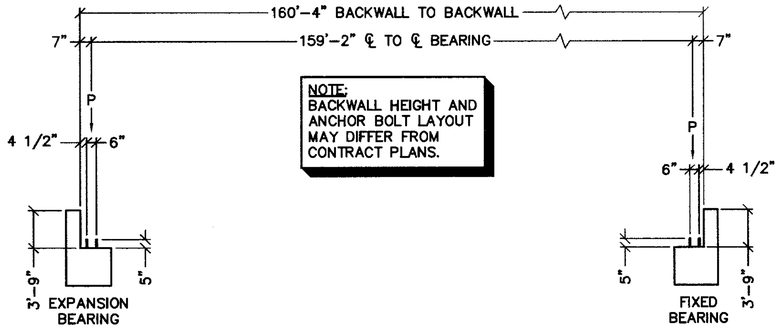

NOTE:
BACKWALL HEIGHT AND ANCHOR BOLT LAYOUT MAY DIFFER FROM CONTRACT PLANS.

ANCHOR BOLT ELEVATION LAYOUT

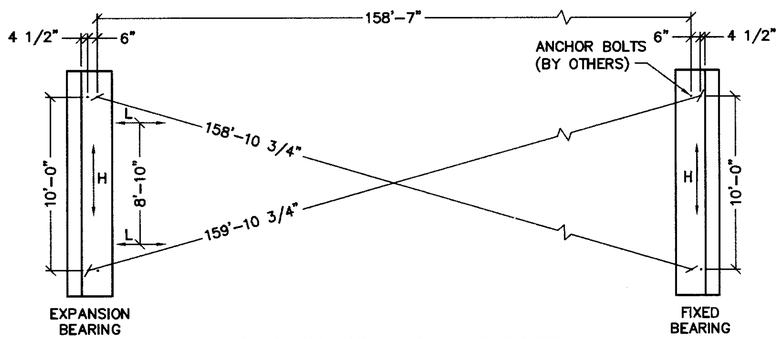

ANCHOR BOLT PLAN LAYOUT

BRIDGE REACTIONS	P (LBS)	H (LBS)	L (LBS)
DEAD	20,500		
LIVE (90 PSF)	28,800		
VEHICLE (H5)	5,000		
WIND (90 MPH)	±10,800	22,900	
OVERTURNING (20 PSF)	−9,300		
SEISMIC		16,900	16,900
THERMAL			3,100

"P": FOUR PER BRIDGE
"H": TWO PER BRIDGE (ONE PER ABUTMENT)
"L": FOUR PER BRIDGE
LIFTING WEIGHT = 81,300 LBS

NOTE:
ANCHOR BOLTS ARE DESIGNED BY BIG R BRIDGE FOR STEEL STRENGTH IN SHEAR AND TENSION OF THE ANCHOR BOLT ONLY. ALL DESIGN CONSIDERATIONS REGARDING CONCRETE BREAKOUT STRENGTH IN SHEAR AND TENSION, PULLOUT STRENGTH, CONCRETE SIDE-FACE BLOWOUT STRENGTH, CONCRETE PRYOUT STRENGTH, EMBEDMENT DEPTH, TYPE OF ANCHORAGE OR ANY OTHER CONCRETE FAILURE MODES ARE NOT CONSIDERED AND ARE NOT THE RESPONSIBILITY OF BIG R BRIDGE. IF LARGER DIAMETER BOLTS ARE REQUIRED TO MEET ANY OF THESE REQUIREMENTS, THAT INFORMATION MUST BE PROVIDED TO BIG R BRIDGE PRIOR TO BEGINNING ANY FABRICATION ON THE BRIDGE.

REV	STATUS	BY	DATE
AB	AS BUILT	MMA	7/29/2015

PROPRIETARY AND CONFIDENTIAL
THIS DRAWING IS THE SOLE PROPERTY OF BIG R MANUFACTURING, LLC. AND CONTAINS PROPRIETARY INFORMATION FOR USE WITH THIS PROJECT ONLY. ANY REPRODUCTION IN PART OR AS A WHOLE WITHOUT WRITTEN PERMISSION IS STRICTLY PROHIBITED.

BIG R BRIDGE
P.O. Box 1290 • Greeley, Colorado 80632-1290
(970) 356-9600 • Fax:(970) 356-9621 • www.bigrbridge.com

160'-0" x 8'-0"
PISCATAQUOG RIVER TRAIL PED. BRIDGE
MANCHESTER, NH
T BUCK CONSTRUCTION

BR14-02922
DESIGN BY ENL
DRAWN BY MMA
CHECKED BY ENL
SHEET NO. T003 OF T003

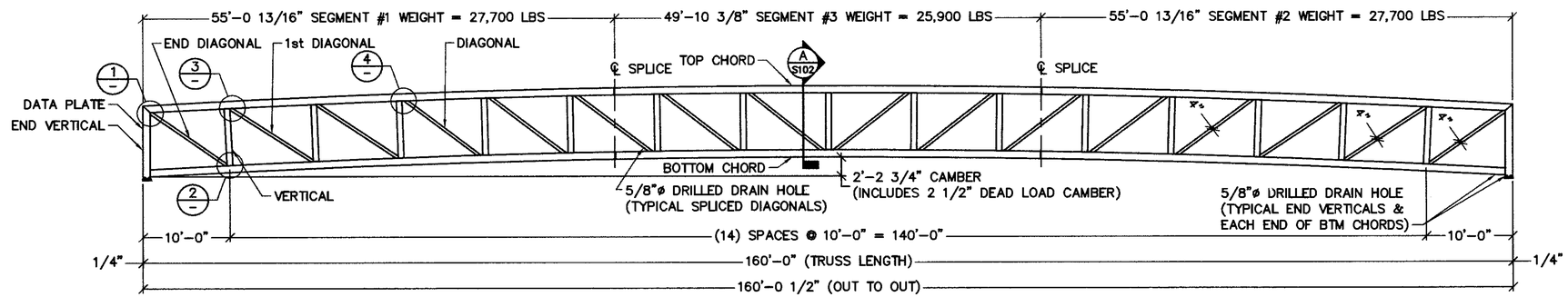

OUTSIDE ELEVATION

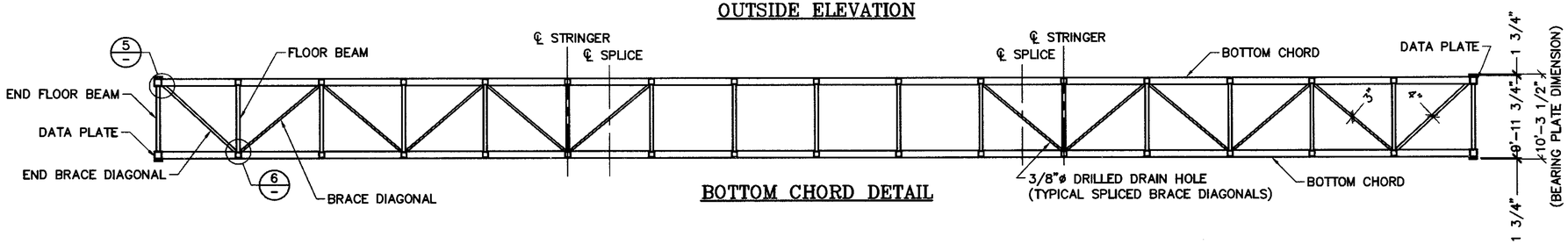

BOTTOM CHORD DETAIL

CVN	MEMBERS	SIZE
*	TOP CHORD	HSS 10x10x3/8
*	BOTTOM CHORD	HSS 10x10x3/8
*	END VERTICAL	HSS 10x10x3/8
*	VERTICAL	HSS 8x8x3/8
*	END DIAGONAL	HSS 8x4x1/4
*	1st DIAGONAL	HSS 6x4x1/4
*	DIAGONAL	HSS 6x4x1/4
*	END BRACE DIAGONAL	HSS 4x4x1/4
*	BRACE DIAGONAL	HSS 4x3x1/4
*	END FLOOR BEAM	W 16x26
*	FLOOR BEAM	W 16x26
*	STRINGER	HSS 4x3x1/4
	END DAM	PL 1/4"x 6"
	TOP HORIZ. RAIL	HSS 1 1/2x1 1/2x3/16
	BOTTOM HORIZ. RAIL	C 4x5.4
	VERTICAL PICKET	L 1 1/2x1 1/2x1/8
	RUB RAIL	2x6 IPE
	BRIDGE DECKING	3x12 SYP (S4S)
	ANCHOR BOLT (BY OTHERS)	1"ø (GALVANIZED)

* CVN TEST REQUIRED TO MEET 15 FT-LBS @ 40°F

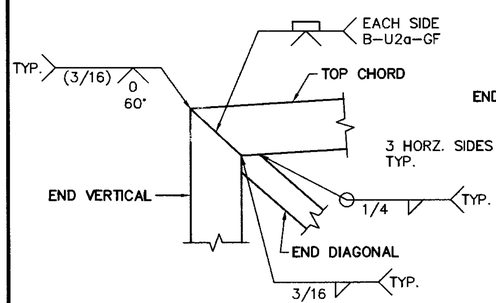

DETAIL 1

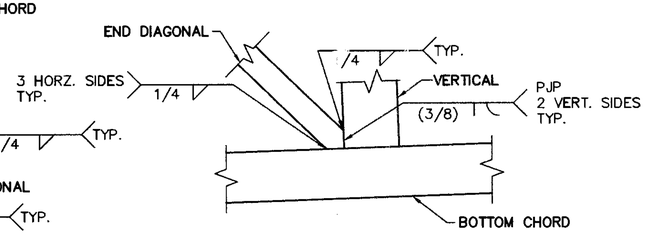

DETAIL 2

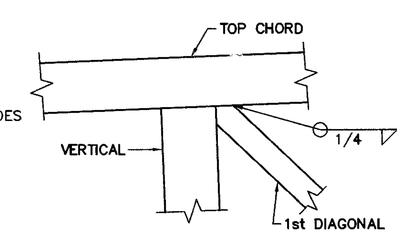

DETAIL 3

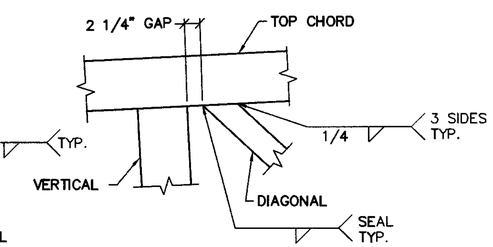

DETAIL 4

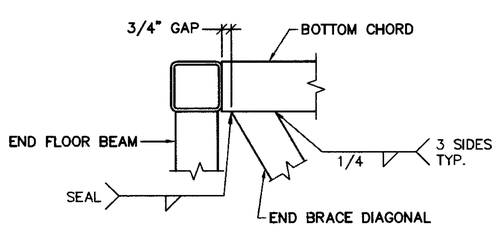

DETAIL 5

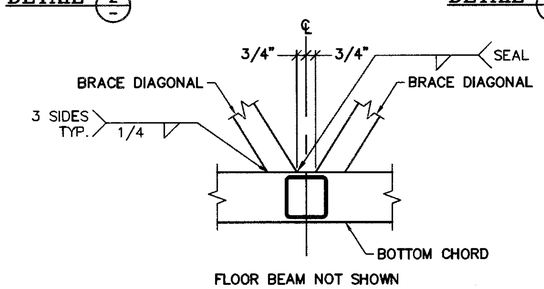

DETAIL 6

REV	STATUS	BY	DATE
AB	AS BUILT	MMA	7/29/2015

PROPRIETARY AND CONFIDENTIAL

THIS DRAWING IS THE SOLE PROPERTY OF BIG R MANUFACTURING, LLC. AND CONTAINS PROPRIETARY INFORMATION FOR USE WITH THIS PROJECT ONLY. ANY REPRODUCTION IN PART OR AS A WHOLE WITHOUT WRITTEN PERMISSION IS STRICTLY PROHIBITED.

BIG R BRIDGE

P.O. Box 1290 • Greeley, Colorado 80632-1290
(970) 356-9600 • Fax:(970) 356-9621 • www.bigrbridge.com

160'-0" x 8'-0"

PISCATAQUOG RIVER TRAIL PED. BRIDGE

MANCHESTER, NH

T BUCK CONSTRUCTION

STATE OF NEW HAMPSHIRE DAVID A. ROGERS No. 7033 LICENSED PROFESSIONAL ENGINEER 8/19/15

BR14-02922

DESIGN BY ENL

DRAWN BY MMA

CHECKED BY ENL

SHEET NO. S101 OF S105

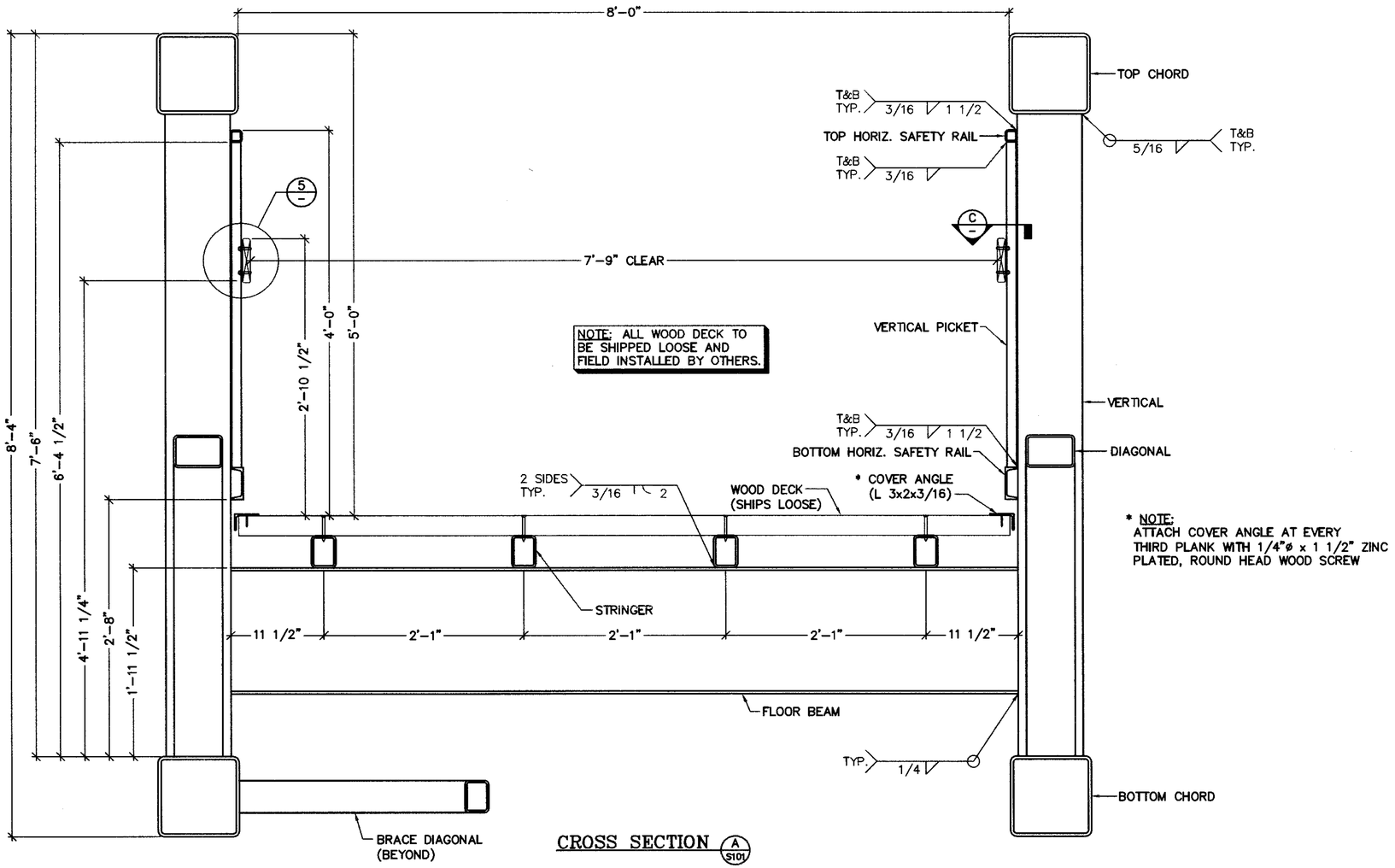

CROSS SECTION (A / S101)

* NOTE:
ATTACH COVER ANGLE AT EVERY THIRD PLANK WITH 1/4"ø x 1 1/2" ZINC PLATED, ROUND HEAD WOOD SCREW

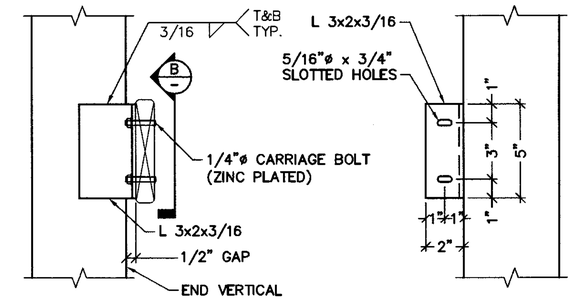

DETAIL @ END VERTICAL

SECTION (B / -)

NOTES:
1) THE RUBRAIL CONNECTION SHOULD ONLY BE SNUG TIGHT TO ALLOW FOR MOVEMENT OF THE RAIL. THE CARRIAGE BOLTS WILL NEED TO BE SEATED INTO THE WOOD AND THE NUT SHOULD ONLY BE TIGHTENED TO SNUG THE RAIL TO THE ANGLE.

2) A 1/4" GAP WILL BE USED BETWEEN THE ENDS OF THE BOARDS AT JOINTS

3) SHOP TO ADJUST CLIP LOCATION SIDE TO SIDE ON VERTICAL AS REQUIRED TO AVOID PICKETS.

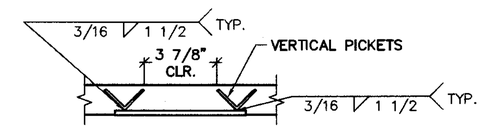

SECTION (C / -)
(VERTICAL & SPLICE LOCATIONS)

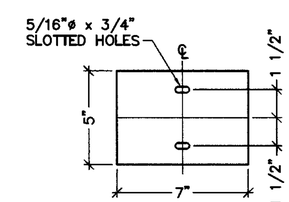

PL 1/4"x5"x7"

RUB RAIL PLATE DETAILS

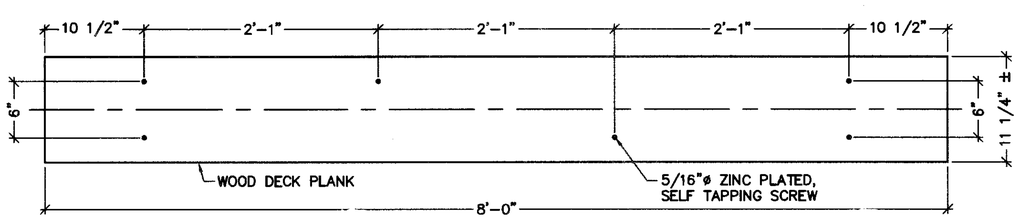

WOOD DECK FASTENING DETAIL
(171 PLANKS REQUIRED)

REV	STATUS	BY	DATE
AB	AS BUILT	MMA	7/29/2015

PROPRIETARY AND CONFIDENTIAL
THIS DRAWING IS THE SOLE PROPERTY OF BIG R MANUFACTURING, LLC. AND CONTAINS PROPRIETARY INFORMATION FOR USE WITH THIS PROJECT ONLY. ANY REPRODUCTION IN PART OR AS A WHOLE WITHOUT WRITTEN PERMISSION IS STRICTLY PROHIBITED.

BIG R BRIDGE
P.O. Box 1290 • Greeley, Colorado 80632-1290
(970) 356-9600 • Fax:(970) 356-9621 • www.bigrbridge.com

160'-0" x 8'-0"
PISCATAQUOG RIVER TRAIL PED. BRIDGE
MANCHESTER, NH
T BUCK CONSTRUCTION

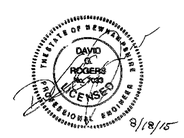

BR14-02922
DESIGN BY ENL
DRAWN BY MMA
CHECKED BY ENL
SHEET NO. S102 OF S105

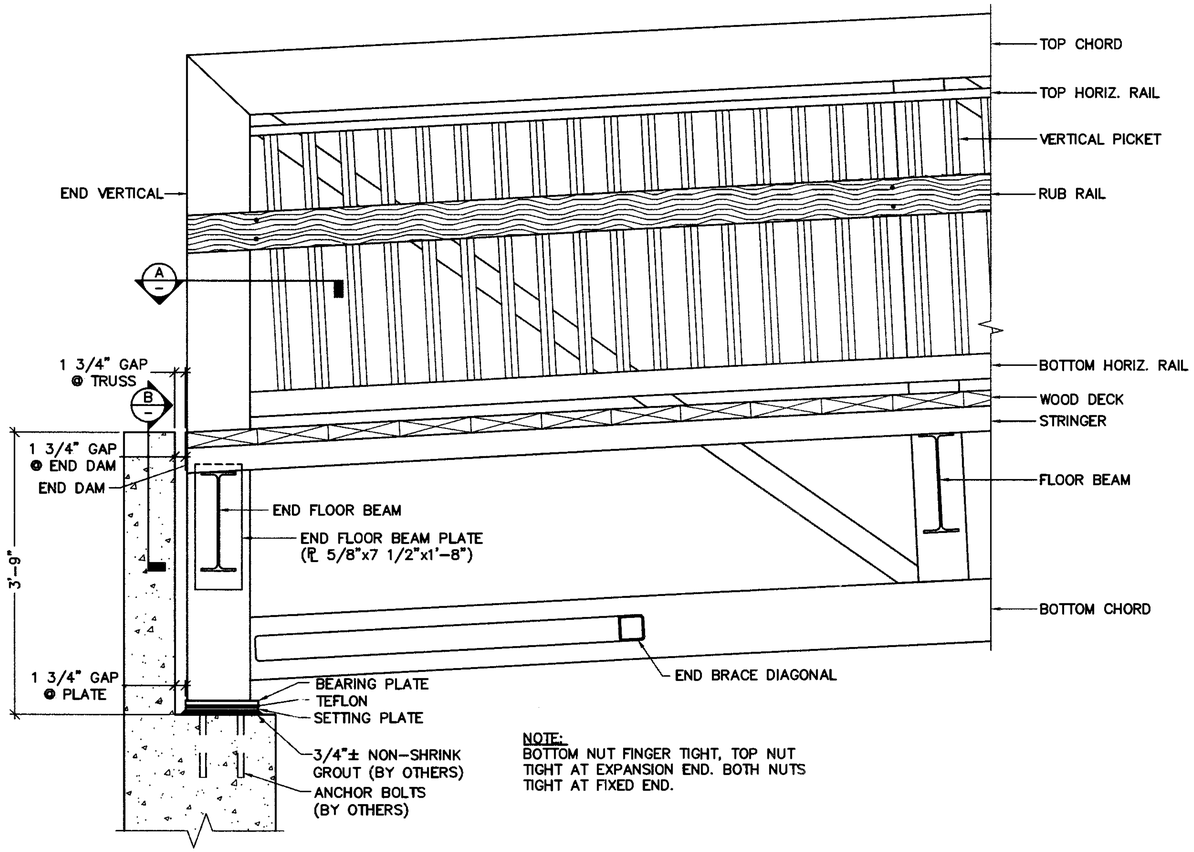

NOTE:
BOTTOM NUT FINGER TIGHT, TOP NUT TIGHT AT EXPANSION END. BOTH NUTS TIGHT AT FIXED END.

INSIDE ELEVATION
(EXPANSION END)

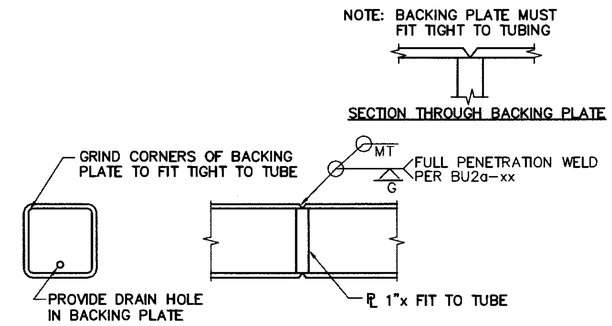

TYPICAL SHOP SPLICE DETAIL

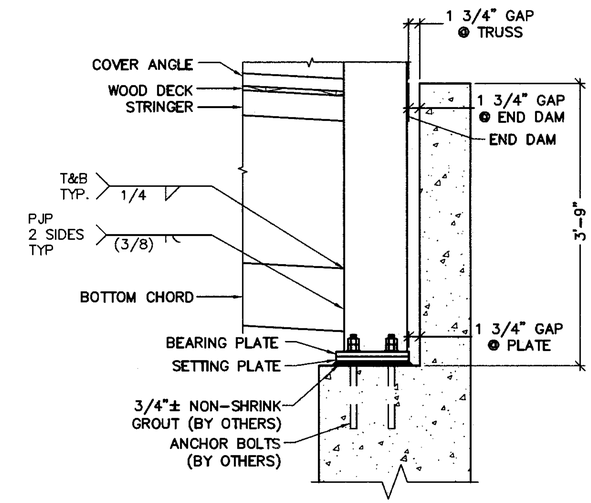

OUTSIDE ELEVATION
(FIXED END)

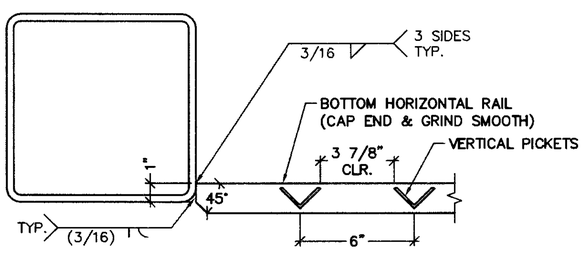

SECTION A

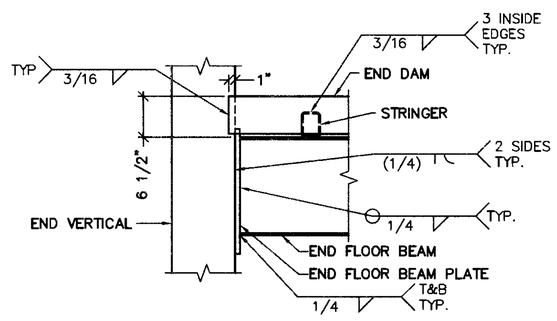

SECTION B

REV	STATUS	BY	DATE
AB	AS BUILT	MMA	7/29/2015

PROPRIETARY AND CONFIDENTIAL
THIS DRAWING IS THE SOLE PROPERTY OF BIG R MANUFACTURING, LLC. AND CONTAINS PROPRIETARY INFORMATION FOR USE WITH THIS PROJECT ONLY. ANY REPRODUCTION IN PART OR AS A WHOLE WITHOUT WRITTEN PERMISSION IS STRICTLY PROHIBITED.

BIG R BRIDGE
P.O. Box 1290 • Greeley, Colorado 80632-1290
(970) 356-9600 • Fax:(970) 356-9621 • www.bigrbridge.com

160'-0" x 8'-0"
PISCATAQUOG RIVER TRAIL PED. BRIDGE
MANCHESTER, NH
T BUCK CONSTRUCTION

BR14-02922	
DESIGN BY	ENL
DRAWN BY	MMA
CHECKED BY	ENL
SHEET NO.	S103 OF S105

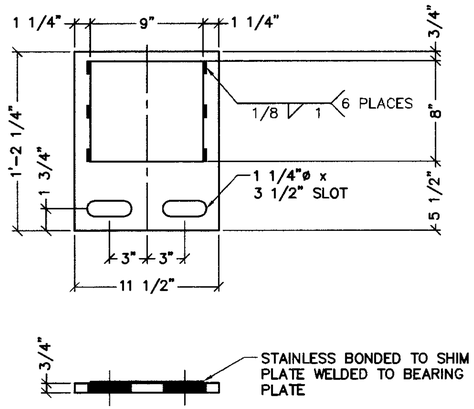

EXPANSION END BEARING PLATE

(2) REQUIRED

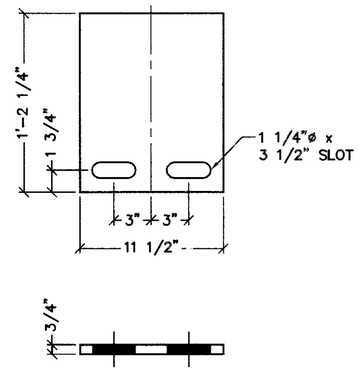

FIXED END BEARING PLATE

(2) REQUIRED

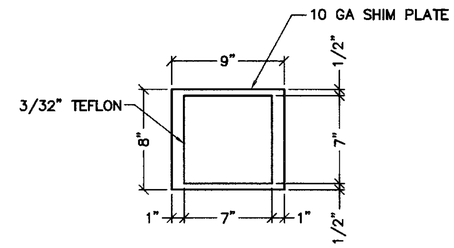

TEFLON/SHIM PLATE LAYOUT

(2) REQUIRED

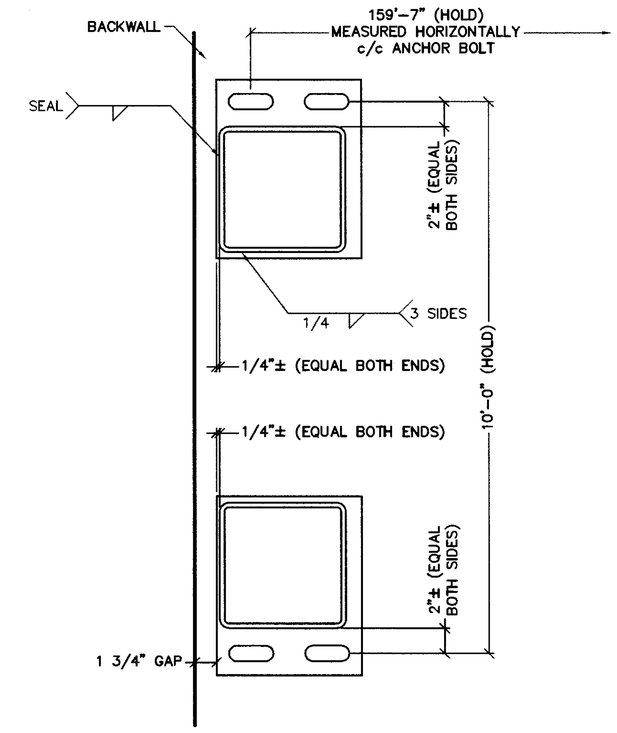

PLAN SHOWING BEARING PLATE CONNECTION

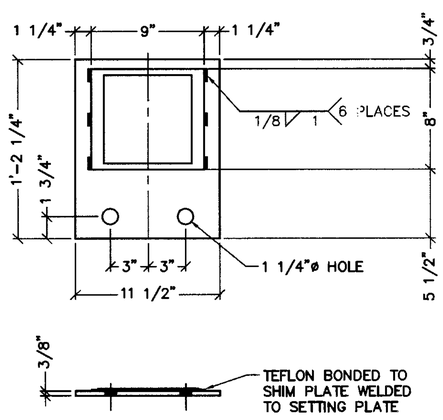

EXPANSION END SETTING PLATE

SHIPS LOOSE
(2) REQUIRED

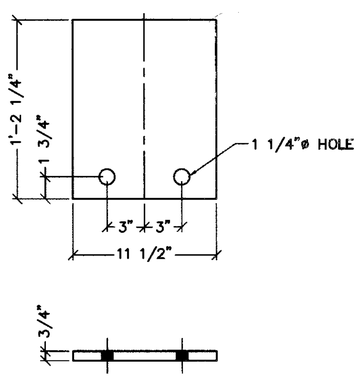

FIXED END SETTING PLATE

SHIPS LOOSE
(2) REQUIRED

REV	STATUS	BY	DATE
AB	AS BUILT	MMA	7/29/2015

PROPRIETARY AND CONFIDENTIAL
THIS DRAWING IS THE SOLE PROPERTY OF BIG R MANUFACTURING, LLC. AND CONTAINS PROPRIETARY INFORMATION FOR USE WITH THIS PROJECT ONLY. ANY REPRODUCTION IN PART OR AS A WHOLE WITHOUT WRITTEN PERMISSION IS STRICTLY PROHIBITED.

BIG R BRIDGE
P.O. Box 1290 • Greeley, Colorado 80632-1290
(970) 356-9600 • Fax:(970) 356-9621 • www.bigrbridge.com

160'-0" x 8'-0"
PISCATAQUOG RIVER TRAIL PED. BRIDGE

MANCHESTER, NH
T BUCK CONSTRUCTION

STATE OF NEW HAMPSHIRE
DAVID G. ROGERS
No. 7793
LICENSED
PROFESSIONAL ENGINEER
8/18/15

BR14-02922

DESIGN BY ENL
DRAWN BY MMA
CHECKED BY ENL
SHEET NO. S104 OF S105

7/29/2015 3:10 PM

BOLTED SPLICE NOTES:

1. A DIRECT TENSION INDICATOR (DTI) WASHER SHALL BE INSTALLED WITH ALL STRUCTURAL BOLTS.
2. ALL STRUCTURAL BOLTS TO BE INSTALLED PER THE TURN-OF-NUT INSTALLATION METHOD.
3. IF BOLTS DO NOT SMOOTHLY ENGAGE UP TO SNUG-TIGHT, THERE MAY BE AN OBSTRUCTION WITHIN THE THREADS. THE BOLT SHOULD BE REMOVED, THE THREADS ON THE BOLT AND NUT CLEANED AND RETAPPED IF NECESSARY TO ALLOW SMOOTH INSTALLATION OF THE BOLT.

CVN	MEMBERS	QTY	THICKNESS	SPLICE PLATE SIZE	HOLES	BOLTS	BOLT QTY
*	TOP CHORD SPLICE PLATE	16	3/4"	7" x 1'-10"	1 1/16"	1"ø x 2 3/4" A325 T3	192
*	BOTTOM CHORD SPLICE PLATE	16	3/4	7" x 1'-10"	1 1/16"	1"ø x 2 3/4" A325 T3	192
*	DIAGONAL SPLICE PLATE	8	3/8"	4" x 1'-11"	13/16"	3/4"ø x 6" A325 T3	32
*	BRACE DIAG. SPLICE PLATE	4	3/8"	3 1/2" x 1'-6"	13/16"	3/4"ø x 4 3/4" A325 T3	12
	DIAGONAL STIFFENER PLATE	8	3/8"	3 1/2" x 11 1/2"	–	–	–
	BRACE DIAG. STIFFENER PLATE	4	3/8"	2 1/2" x 9"	–	–	–
	SPLICE BAR	8	1"	1" x 6'-8"	–	–	–
	STRINGER SPLICE PLATE	16	3/8"	4" x 9"	13/16"	3/4"ø x 1 3/4"	16

* CVN TEST REQUIRED TO MEET 15 FT-LBS @ 40°F

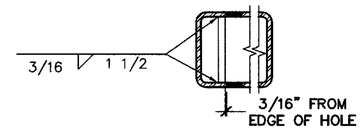

TYPICAL SPLICE STIFFENER

NOTE: STIFFENER PLATES ARE FLUSH ON THE INSIDE OF THE SPLICED DIAGONALS AND SPLICED BRACE DIAGONALS

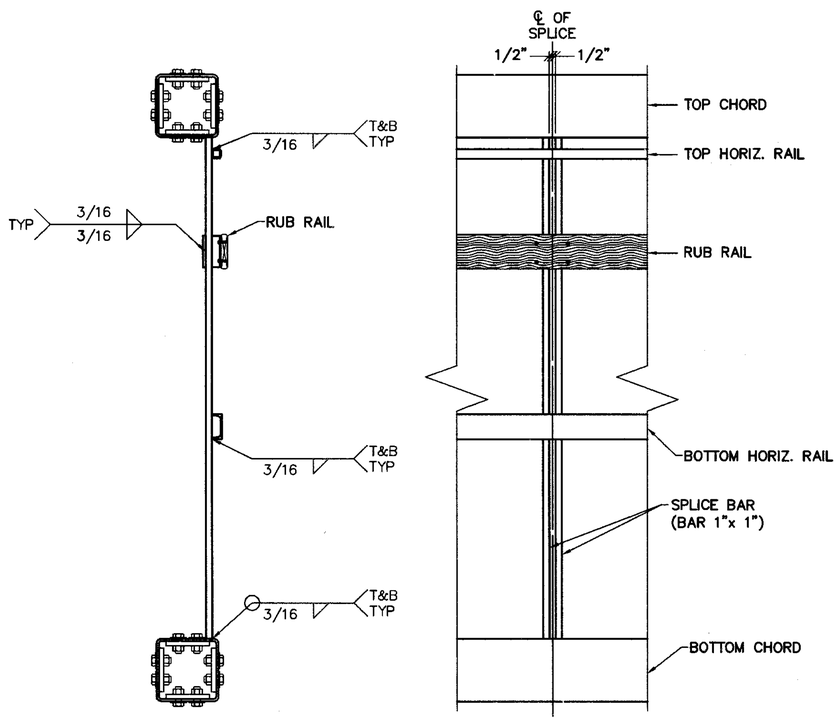

SPLICE DETAILS
(VERTICAL PICKETS OMITTED FOR CLARITY)

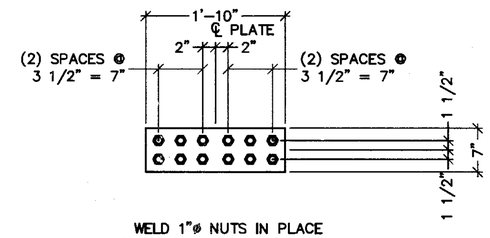

WELD 1"ø NUTS IN PLACE
(2 OPPOSITE SIDES EA. NUT)

TOP CHORD SPLICE PLATES
(LOCATE INSIDE OF TUBE)

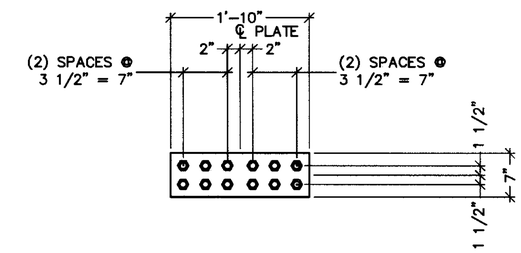

WELD 1"ø NUTS IN PLACE
(2 OPPOSITE SIDES EA. NUT)

BOTTOM CHORD SPLICE PLATES
(LOCATE INSIDE OF TUBE)

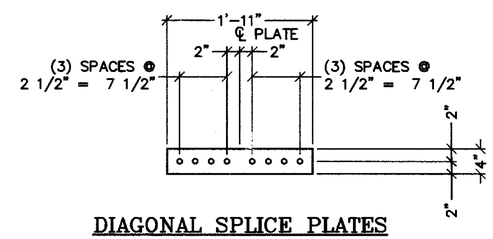

DIAGONAL SPLICE PLATES
(LOCATE OUTSIDE OF TUBE)

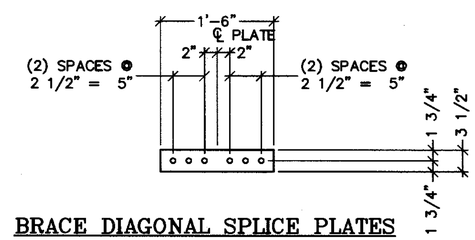

BRACE DIAGONAL SPLICE PLATES
(LOCATE OUTSIDE OF TUBE)

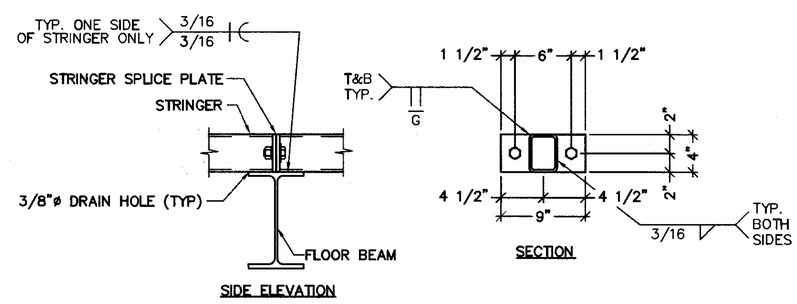

STRINGER SPLICE DETAIL

REV	STATUS	BY	DATE
AB	AS BUILT	MMA	7/29/2015

PROPRIETARY AND CONFIDENTIAL

THIS DRAWING IS THE SOLE PROPERTY OF BIG R MANUFACTURING, LLC. AND CONTAINS PROPRIETARY INFORMATION FOR USE WITH THIS PROJECT ONLY. ANY REPRODUCTION IN PART OR AS A WHOLE WITHOUT WRITTEN PERMISSION IS STRICTLY PROHIBITED.

BIG R BRIDGE

P.O. Box 1290 • Greeley, Colorado 80632-1290
(970) 356-9600 • Fax:(970) 356-9621 • www.bigrbridge.com

160'-0" x 8'-0"
PISCATAQUOG RIVER TRAIL PED. BRIDGE

MANCHESTER, NH
T BUCK CONSTRUCTION

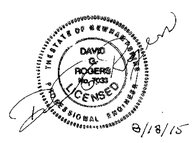

BR14-02922

DESIGN BY ENL

DRAWN BY MMA

CHECKED BY ENL

SHEET NO. S105 OF S105

K:\2014\BR\BR14-02922\BR14-02922-P.dwg

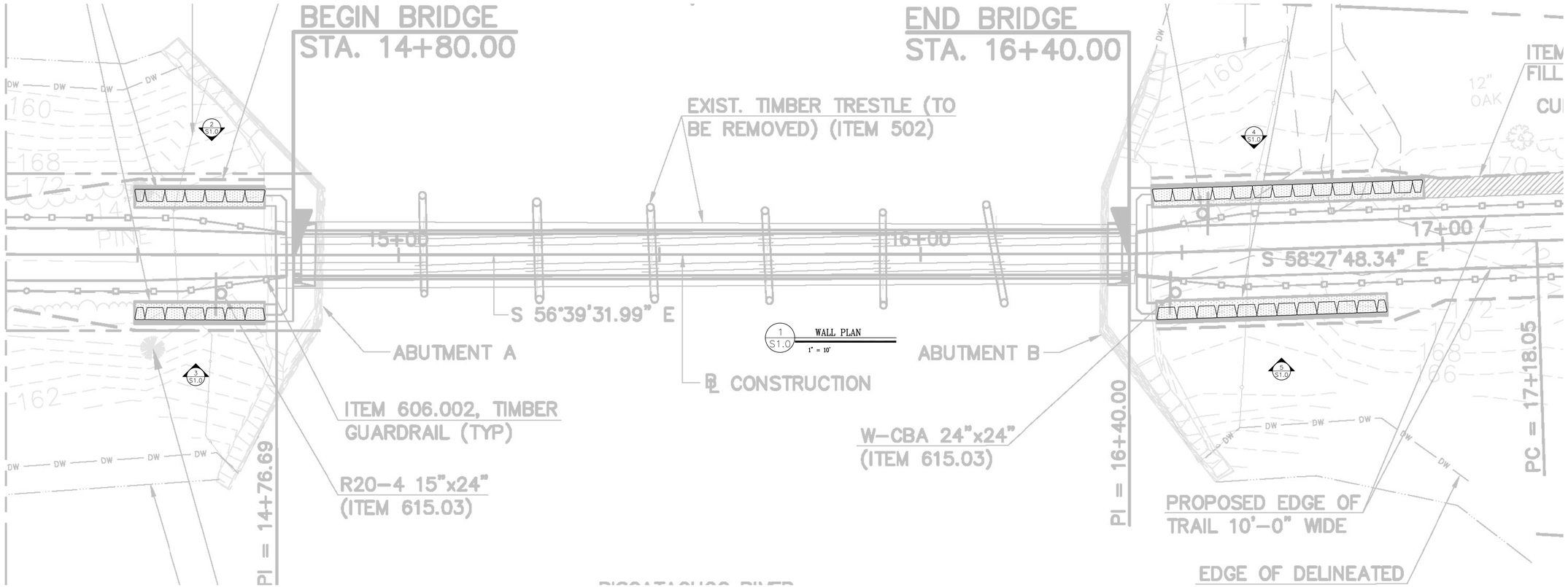

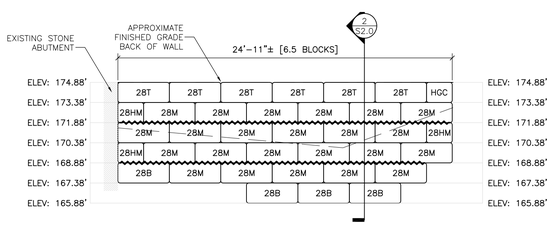

2 S1.0 WALL ELEVATION
3/16" = 1'

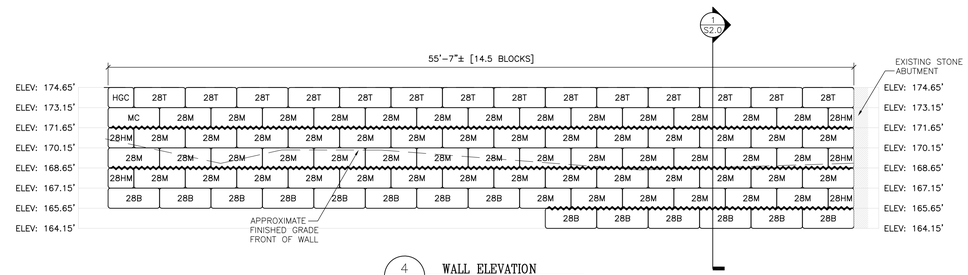

4 S1.0 WALL ELEVATION
3/16" = 1'

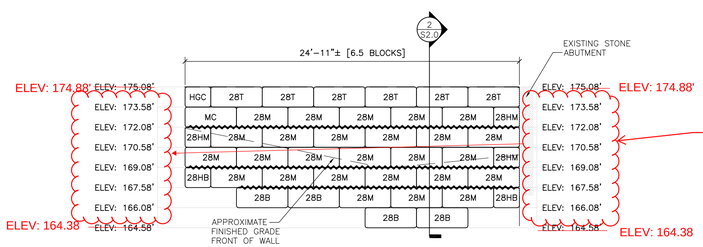

Adjust elevations based on correct top and bottom elevations.

3 S1.0 WALL ELEVATION
3/16" = 1'

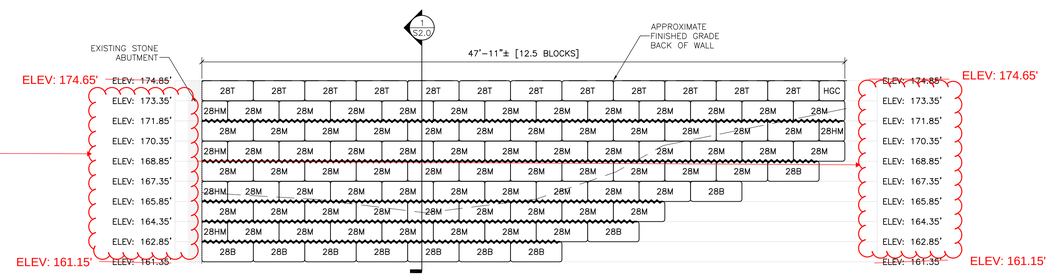

5 S1.0 WALL ELEVATION
3/16" = 1'

No.	Date	Revision	By
1	7/30/2015	Revise per comments from reviewer	JMB

STATE OF NEW HAMPSHIRE
JEFFREY M. BIENVAY
No. 9588
PROFESSIONAL ENGINEER

SFC ENGINEERING PARTNERSHIP INC
66 GOLD LEDGE AVENUE
AUBURN, NH 03032
TEL. 603-647-8700
FAX. 603-647-8711
www.sfceng.com

MICHIE CORPORATION, INC.
173 BUXTON INDUSTRIAL DRIVE–PO BOX 870
HENNIKER, NH 03242
PHONE: 603–428–3218
FAX: 603–428–7426

Piscataquog River Trail Phase III-A Manchester, NH

Redi-Rock Wall Design Drawings

Scale: AS SHOWN

Project No. 395629 | Designed by: JMB | Drawn by: JMB | Checked by:

Date: 7/22/2015

DWG NO.
S1.0

© SFC ENGINEERING PARTNERSHIP INC, 2015

PISCATAQUAGRAILTRAIL 150730

Drawing name: N:\07\395629 Michie Revisions\Redi Trail-Arch\CAD\Revisions\Redi Trail 150730.dwg

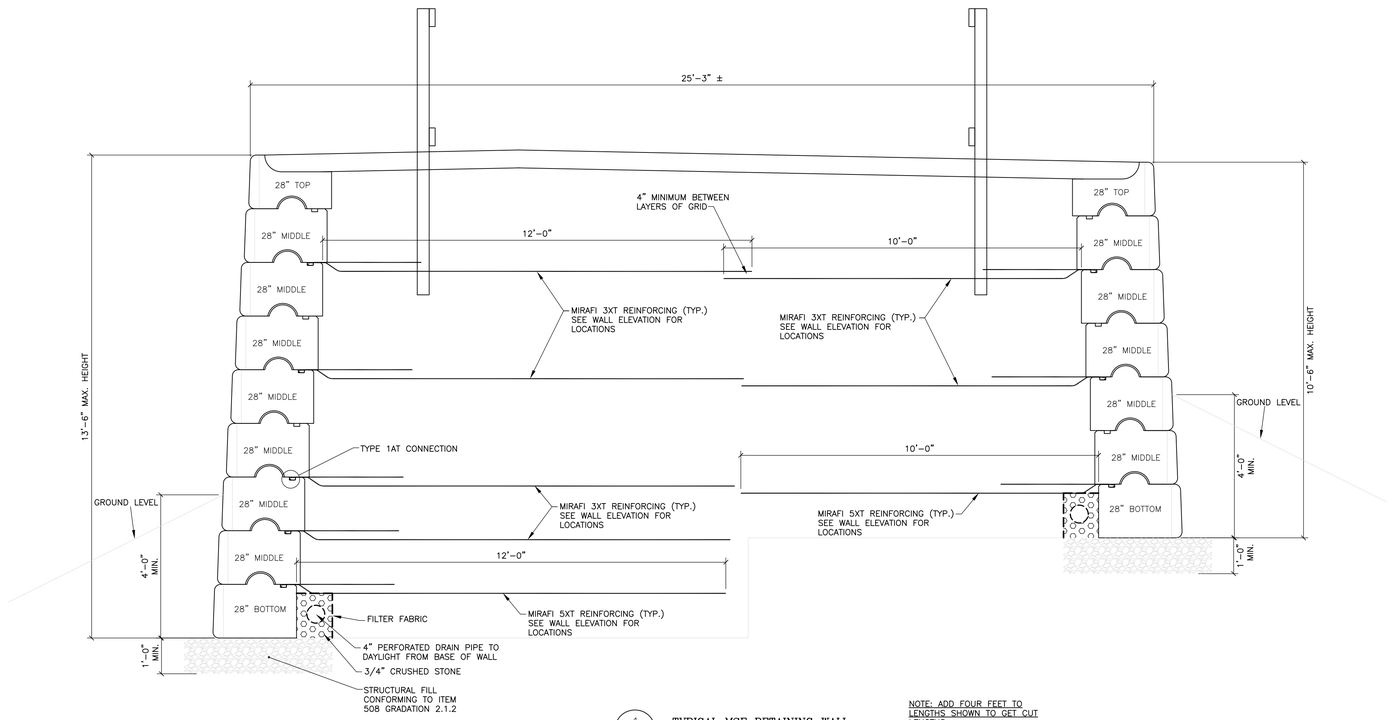

1 / S2.0 TYPICAL MSE RETAINING WALL

1/2" = 1'

NOTE: ADD FOUR FEET TO LENGTHS SHOWN TO GET CUT LENGTHS.

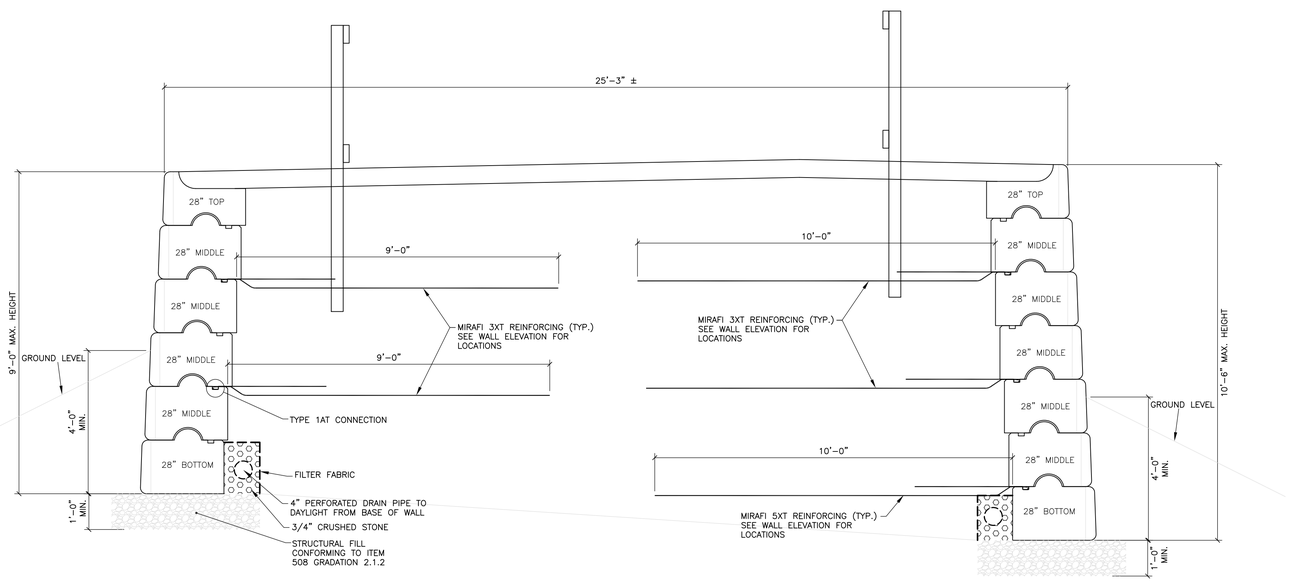

2 / S2.0 TYPICAL MSE RETAINING WALL

1/2" = 1'

NOTE: ADD FOUR FEET TO LENGTHS SHOWN TO GET CUT LENGTHS.

REDI-ROCK RETAINING WALL NOTES:

1. CONCRETE USED FOR WALL UNITS SHALL HAVE A 28-DAY COMPRESSIVE STRENGTH OF 4,000 P.S.I. WALL UNITS SHALL COMPLY WITH REDI-ROCK INTERNATIONAL'S SPECIFICATIONS, ASTM C-94 AND ACI-301-99, HAVE 4 1/2% - 7 1/2% ENTRAINED AIR, 4" - 6" SLUMP, AND MUST BE PLACED AT A MINIMUM OF 50°.
2. WALL CONSTRUCTION SHALL FULLY COMPLY WITH ITEM 592.1 OF THE PROJECT SPECIFICATIONS AND REDI-ROCK INTERNATIONALS STANDARD SPECIFICATIONS.
3. UNDERDRAINS SHALL BE PERFORATED GEOTEXTILE WRAPPED, 4" DIAMETER, AND SHALL MEET THE REQUIREMENTS OF ASTM F405. UNDERDRAINS SHALL BE THE RESPONSIBILITY OF THE CONTRACTOR. DRAINS NOT SPECIFIED TO TIE INTO THE SITE DRAINAGE SHALL DRAIN TO DAYLIGHT.
4. LEVELING PAD SHALL BE STRUCTURAL FILL MEETING THE REQUIREMENTS OF SECTION 508 GRADATION 2.1.2.
5. DRAINAGE MATERIAL SHALL BE 3/4" CRUSHED STONE PLACED DIRECTLY BEHIND WALL FOR THE DEPTHS SPECIFIED ON PLANS (1'-0" MIN). MIRAFI 140N OR APPROVED EQUAL FILTER FABRIC SHALL BE PLACED BETWEEN ALL INTERFACES OF DRAINAGE MATERIAL AND VIRGIN AND/OR SILTY MATERIALS. EXPOSED DRAINAGE STONE SHALL BE PROTECTED FROM FINE SOIL MIGRATION THROUGHOUT CONSTRUCTION.
6. BACKFILL SOIL SHALL MEET THE REQUIREMENTS OF ITEM 209.201
7. ALL BACKFILL SHALL BE COMPACTED TO 95% OF STANDARD PROCTOR (ASTM D698). ONLY HAND-OPERATED COMPACTION EQUIPMENT SHALL BE ALLOWED WITHIN 3 FEET OF THE BACK OF THE WALL BLOCKS. BACKFILL AND COMPACT THE FILL MATERIAL BEHIND THE WALL AS THE WALL IS INSTALLED. SPREAD BACKFILL IN UNIFORM LIFTS NOT EXCEEDING 9 INCHES. COMPACTION TESTS SHALL BE TAKEN AS THE WALL IS INSTALLED. CONTRACTOR SHALL ENSURE THAT FOUNDATION SOIL IS CAPABLE OF SUPPORTING 4,000 P.S.F.
8. ENSURE THAT THE FIRST COURSE OF WALL UNITS IS IN FULL CONTACT WITH FOUNDATION. INSTALL NEXT COURSE OF UNITS SUCH THAT THE VERTICAL GAPS ARE STAGGERED BETWEEN ADJACENT COURSES. GAPS SHALL BE FILLED WITH DRAINAGE STONE PRIOR TO STARTING THE NEXT COURSE.
9. CONTRACTOR AND ENGINEER-OF-RECORD SHALL APPROVE/PROVIDE ALL ELEVATIONS AND INVERTS IN THESE PLANS PRIOR TO ORDERING MATERIAL.
10. BASE BLOCKS SHALL BE SET BACK 1-½" WHEN STEPPING UP AND SET FORWARD 1-½" WHEN STEPPING DOWN. WALL ANGLES SHALL BE SLIGHTLY ADJUSTED TO ACCOMMODATE PROPERTY LINES AND OBSTRUCTIONS.
11. CONTRACTOR IS RESPONSIBLE FOR ENSURING THAT EXCAVATIONS ARE STABLE AND MEET OSHA REQUIREMENTS.
12. MIRAFI GEO-GRID SHALL BE INSTALLED WITH THE MACHINE (STRONG) DIRECTION PERPENDICULAR TO THE WALL. GEO-GRID SUBSTITUTION IS NOT ALLOWED.
13. ANCHOR BARS SHALL BE 7/16" FIBERGLAS BAR.
14. GEO-GRID SHALL BE INSTALLED UNDER TENSION. TENSION SHALL BE APPLIED AND MAINTAINED BY STAKES OR HAND TENSIONING UNTIL GEO-GRID HAS BEEN COVERED BY 6" MIN. OF STRUCTURAL FILL.
15. WALL DESIGN IS BASED ON SHEETS 22, 23 & 24 OF PLAN TITLED PISCATAQUOG RIVER TRAIL PHASE III-A, PREPARED BY HOYLE, TANNER 7 ASSOCIATES, INC., DATED DECEMBER 2014.
16. SEE SHEET 22 OF ABOVE REFERENCED PLAN FOR ADDITIONAL WALL DETAILS.

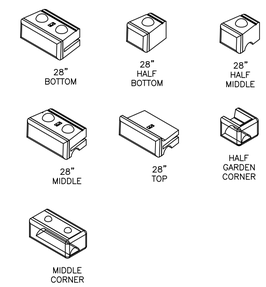

Block Count	
Name	Count
28B	32
28HB	2
28HM	16
28M	182
28T	38
HGC	4
MC	2
Total	276
Area	1587 SF
3XT	603 SY
5XT	116 SY
Bars	115

No.	Date	Revision	By
1	7/30/2015	Revise per comments from reviewer	JMB

STATE OF NEW HAMPSHIRE JEFFREY M. BEMWAY No. 9528 PROFESSIONAL ENGINEER

SFC ENGINEERING PARTNERSHIP INC.
66 GOLD LEDGE AVENUE
AUBURN, NH 03032
TEL. 603-647-5700
FAX. 603-647-8711
www.sfceng.com

MICHIE CORPORATION, INC.
173 BUXTON INDUSTRIAL DRIVE-PO BOX 870
HENNIKER, NH 03242
PHONE: 603-428-3218
FAX: 603-428-7426

Piscataquog River Trail Phase III-A Manchester, NH

Redi-Rock Wall Design Drawings

Project No. 395629 | Scale: AS SHOWN

Date: 7/22/2015 | Designed by: JMB | Drawn by: JMB | Checked by:

DWG NO. S1.0

© SFC ENGINEERING PARTNERSHIP INC. 2015

PISCATAQUAGRAILTRAIL 150730

Drawing name: M:\STORMDRAIN\Michie Thurstonson\Trail Trail\AutoCAD\Thurstonson\Trail.dwg 7/30/2015